PROCESS ENGINEERING FLOW DIAGRAM

PRA RANCANGAN PABRIK BIODIESEL DARI BIJI KARET DAN METHANOL DENGAN KAPASITAS 100.000 TON/TAHUN

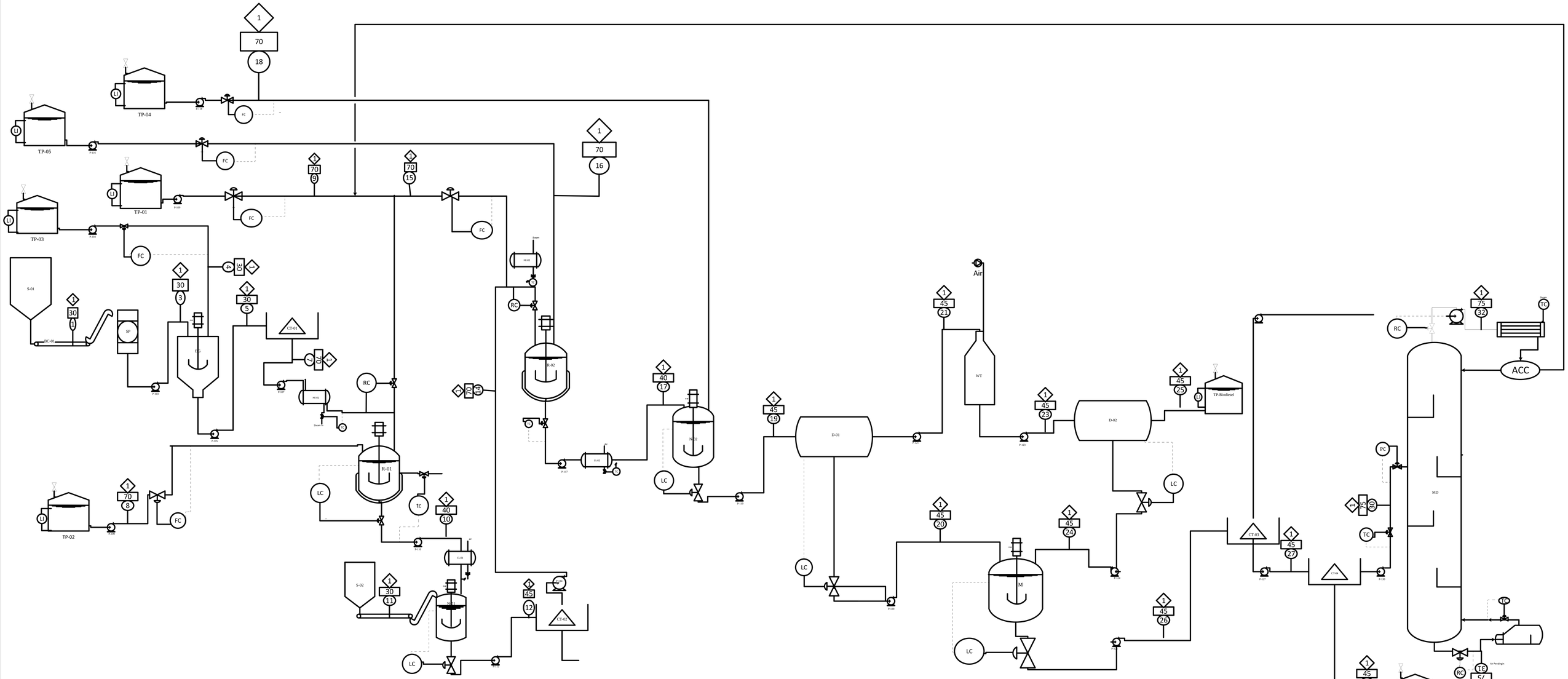

No	Komponen	Nomor Arus																													
		1	2	3	4	5	6	7	8	9	10	11	12	13	14	15	16	17	18	19	20	21	22	23	24	25	26	27	28	29	30	31	32
1	Trigliserida			7040.40404		7040.40404		7040.40404			7040.40404		7040.40404	0	7040.40404			704.0404		704.0404	36.09658	667.9438		667.9438		667.9438	36.09658		36.09658				
2	Gum			1347.222222		1347.222222	1347.222222																										
3	FFA			2146.464646		2146.464646		2146.464646			107.3232323		107.3232323	0	107.323232			107.3232		107.3232	5.502527	101.8207		101.8207		101.8207	5.502527		5.502527				
4	H3PO4				18.37373737	18.37373737	18.37373737																										
5	H2O			2092.171717	3.242424242	2095.414141	2095.414141		0.298858092	18.9293864	143.0849513		144.1279551	2.882559102	141.245396	2.92339	28.16162	172.3304	182.036	379.7351	360.2659	19.46925	465.609	485.0783	315.0901	169.9881	675.356	675.2547	0.101303	6.752547	668.5022	654.8593	13.6429
6	CH3OH									927.5399336	707.2491994		707.2	14.14498399	693.104215	1458.772		1495.429		1495.429	1418.757	76.67153		76.67153	76.67153		1495.429	1495.204	0.224314	14.95204	1480.252	29.60505	1450.647
7	H2SO4								5.678303745		5.678303745																						
8	CaO											3.246629744																					
9	CaSO4												7.881929643	7.881929643																			
10	NaOH																56.32323	56.32323															
11	HCl																		51.34349														
12	NaCl																			82.29797	82.29797						82.29797	82.29797	0	82.29797			
13	Metil Ester										2135.575442		2135.575442	0	2135.57544			8499.406		8499.406	169.9881	8329.417		8329.417		8329.417	169.9881		169.9881				
14	Gliserol																	628.9809		628.9809	596.7326	32.24823		32.24823	32.24823		628.9809	628.9809	0	628.9809			
15	Biji Karet	25252.52525																															
16	Ampas		12626.26263																														
Total		25252.52525	12626.26263	12626.26263	21.61616162	12647.87879	3461.010101	9186.868687	5.977161837	946.46932	10139.31517	3.246629744	10142.5618	24.90947273	10117.6523	1461.695	84.48485	11663.83	233.3795	11897.21	2669.641	9227.571	465.609	9693.18	424.0099	9269.17	3093.651	2881.738	211.9128	732.9834	2148.755	684.4643	1464.29

SIMBOL	KETERANGAN
LC	Level Controller
LI	Level Indikator
TC	Temperature Controller
	Nomor Arus
	Suhu, C
	Tekanan, atm
FC	Control Valve
	Electric Connection
	Piping
	Udara Tekan
RC	Ratio Controller

ALAT	KETERANGAN
TP	Tangki Penyimpanan
R	Reaktor
N	Neutralizer
S	Silo
EG	Ekstrasi Gum
M	Mixer
D	Dekanter
CT	Cooling Tower
MD	Menara Distilasi
CD	Condenser
RB	Rebuiler
CO	Cooler
HE	Heater
P	Pompa

JURUSAN TEKNIK KIMIA
FAKULTAS TEKNOLOGI INDUSTRI
UNIVERSITAS ISLAM INDONESIA
YOGYAKARTA

PROCESS ENGINEERING FLOW DIAGRAM
Pra Rancangan Pabrik Biodiesel dari Biji Karet dan Methanol
KAPASITAS 100.000 TON/TAHUN

Dikerjakan oleh:
1. Agus Setio Gunda Findita (13 521 208)
2. Anggia Dewi Suparta (13 521 224)

Dosen pembimbing:
Ir. Drama, Dr, S.T., M.Sc

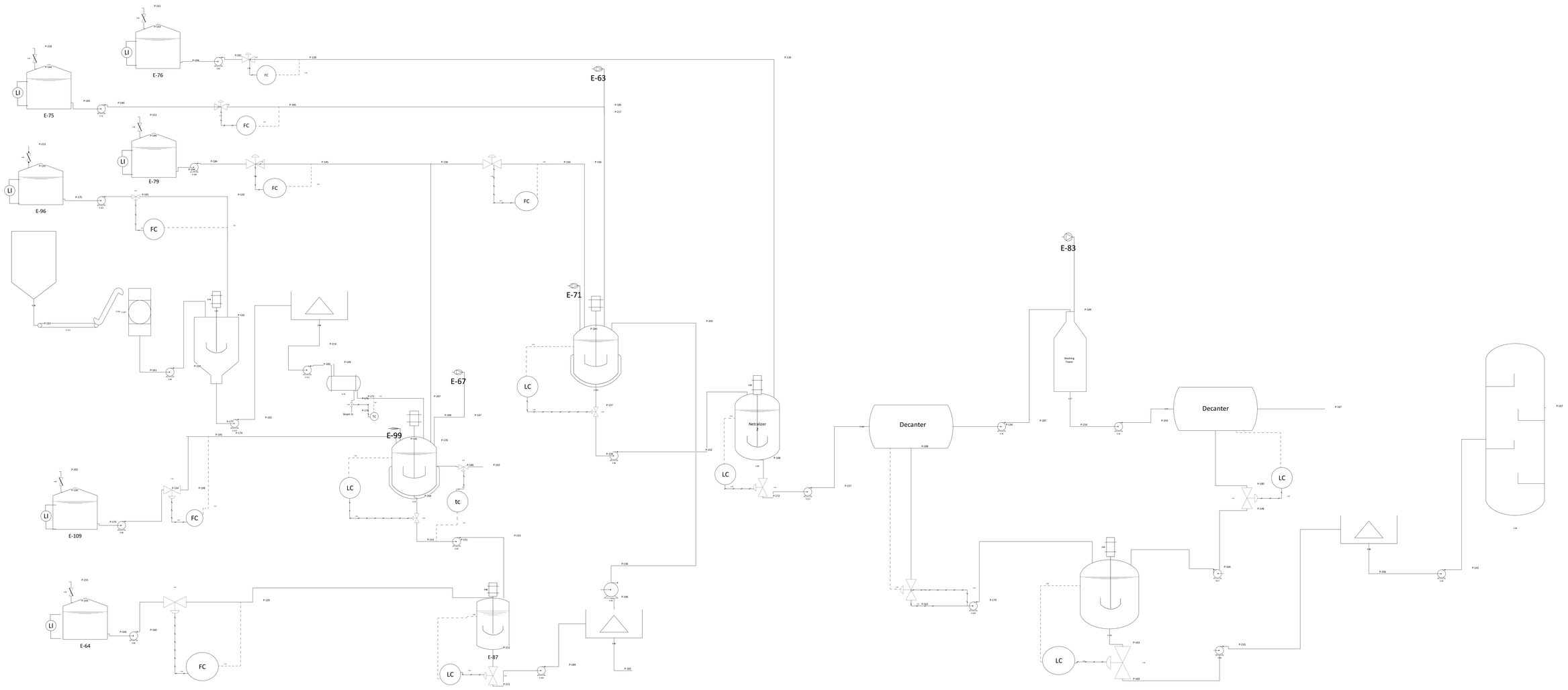
E-75
E-76
E-79
E-96
E-109
E-64
E-63
E-71
E-67
E-99
E-87
E-83
LI
FC
LC
tc
Steam in
Neutralizer
Decanter
Decanter
Washing Tower