Lampiran 1 : Kuesioner Penelitian

KUESIONER PENELITIAN

ANGKET PENELITIAN

Hal : Pengisian Kuisioner

Kepada Yth.

Bpk/Ibu/Sdr

Di Tempat

Assalamua'laikum.Wr.Wb

Saya adalah mahasiswa Magister Manajemen Universitas Islam Indonesia yang sedang melakukan penelitian dengan judul "ANALISIS PERILAKU MENGGUNAKAN EMONEY DENGAN PENDEKATAN TAM (TECHNOLOGY ACCEPTANCE MODEL)"dimana dalam penelitian ini saya menyusun kuisioner untuk menunjang penelitian tersebut.Dalam kuisioner ini terdapat pernyataan-pernyataan yang dimaksudkan untuk memperoleh penilaian Bpk/Ibu/Sdr.

Saya mohon bantuan kepada Bapak/Ibu/Saudara/i untuk bersedia mengisi kuisioner sesuai dengan pernyataan-pernyataan yang tertera berikut ini. Bantuan Bapak/Ibu/Saudara/i sangat saya harapkan demi terselesainya penelitian ini. Jawaban dan identitas responden akan terjamin kerahasiaanya.

Atas bantuan dan kesediaan Bapak/Ibu/Saudara/i dalam mengisi kuisioner ini, dengan rendah hati saya ucapkan terima kasih.

BAGIAN 1: IDENTITAS RESPONDEN

Pertanyaan berikut berkenaan dengan jati diri Bapak/Ibu Saudara. Jawablah pertanyaan tersebut dengan memberi tanda silang (X) pada nomor jawaban yang dianggap sesuai.

Daftar Pertanyaan

1. Jenis Kelamin
   - ☐ Laki-Laki
   - ☐ Perempuan
2. Jumlah Penghasilan
   - ☐ < 1 Juta
   - ☐ 1 -3 Juta
   - ☐ > 3 Juta
3. Usia
   - ☐ < 20 tahun
   - ☐ 20-30 Tahun
   - ☐ 31-40 tahun
   - ☐ > 41 tahun
4. Jenis Pekerjaan
   - ☐ PNS
   - ☐ Pegawai Swasta
   - ☐ Karyawan BUMN / BUMD
   - ☐ Pelajar/Mahasiswa
   - ☐ Wiraswasta
   - ☐ Lainnya .....
5. Daerah Tempat Tinggal
   - ☐ Jawa Tengah
   - ☐ Jawa Timur
   - ☐ Jawa Barat
   - ☐ DIY
6. Sudah Berapa Lama Menggunakan Emoney
   - ☐ < 1 Tahun
   - ☐ > 1 Tahun
7. Produk Emoney yang digunakan, boleh pilih lebih dari 1
   - ☐ OVO
   - ☐ GOPAY
   - ☐ Mandiri Emoney
   - ☐ Link Aja
   - ☐ DANA
   - ☐ BCA Flazz
   - ☐ Lainnya

Petunjuk: berilah penilaian Bpk/Ibu/ Sdr terhadap pernyataan-pernyataan di bawah ini dengan menyilang angka yang dianggap paling sesuai

1	2	3	4	5
Sangat Tidak Setuju (STS)	Tidak Setuju (TS)	Netral (N)	Setuju (S)	Setuju Sekali (SS)

BAGIAN 2: PERSEPSI MANFAAT

Pernyataan dibawah ini berkenaan dengan Persepsi Manfaat	**STS**	**TS**	**N**	**S**	**SS**
Dengan menggunakan e-money saya memperoleh manfaat berupa proses pembayaran yang lebih cepat					
Dengan e-money saya memperoleh manfaat berbagai diskon dan promo yang ditawarkan					
Dengan Emoney saya memperoleh manfaat berupa rasa aman dalam bertransaksi					
Sudah banyak outlet yang menerima transaksi *emoney*					
Transaksi menggunakan Emoney tidak bertele-tele					
Dengan Emoney memberikan ketelitian nominal transaksi yang lebih baik					

BAGIAN 3: PERSEPSI KEMUDAHAN

Pernyataan dibawah ini berkenaan dengan Persepsi Kemudahan	**STS**	**TS**	**N**	**S**	**SS**
Emoney praktis untuk digunakan sehari-hari					
Emoney sebagai alternatif uang elektronik yang mudah dibawa kemana-mana					
Menggunakan *emoney* sangat membantu untuk memenuhi kebutuhan saya dalam bertransaksi					
Emoney lebih fleksibel karena tidak perlu membawa uang tunai					
Saya tidak memerlukan banyak upaya untuk menggunakan Emoney					

BAGIAN 4: TINGKAT KEPERCAYAAN

Pernyataan dibawah ini berkenaan dengan Tingkat Kepercayaan	STS	TS	N	S	SS
Saya percaya terhadap perusahaan penerbit e-money untuk menjamin kerahasiaan data					
Saya percaya terhadap integritas perusahaan yang memproduksi e-money					
Saya percaya perusahaan yang memproduksi e-money memberikan jasa sesuai yang dijanjikan					
Menurut saya*Emoney* memiliki tingkat kredibilitas yang baik					

BAGIAN 5: SIKAP

Pernyataan dibawah ini berkenaan dengan Sikap	STS	TS	N	S	SS
Saya memiliki pendapat positif dalam uang elektronik di ponsel					
Saya yakin kelanjutan penggunaan uang elektronik di ponsel baik untuk saya					
Saya yakin kelanjutan penggunaan uang elektronik di ponsel sudah tepat					
Saya yakin menggunakan e-money sangat bermanfaat					

BAGIAN 6: MINAT

Pernyataan dibawah ini berkenaan dengan Minat	STS	TS	N	S	SS
Saya bermaksud untuk menggunakan e-Money di ponsel terus-menerus di masa mendatang					
Merekomendasikan orang lain dalam penggunaan uang elektronik di ponsel					
Saya akan sering menggunakan e-Money di ponsel di masa depan					

Saya akan terus menggunakan layanan seluler canggih pada pembayaran transaksi e-money					
Saya berharap dapat menggunakan layanan seluler canggih pada pembayaran transaksi e-money di masa depan juga					

BAGIAN 7: PERILAKU KONSUMEN

Pernyataan dibawah ini berkenaan dengan Perilaku Konsumen	**STS**	**TS**	**N**	**S**	**SS**
Saya telah menggunakan e-money					
Saya akan terus menggunakan e-money					
Saya terbiasa menggunakan e-money					
Saya mendapat beberapa kemudahan pada saat menggunakan e-money					
Saya mengutamakan penggunaan emoney dibanding uang cash					

HASIL JAWABAN RESPONDEN

NO	PERSEPSI MANFAAT						JML	PERSEPSI KEMUDAHAN					JML	TINGKAT KEPERCAYAAN				JML	SIKAP				JML	MINAT					JML	PERILAKU KONSUMEN					JML
1	4	5	4	3	4	4	24	3	4	4	4	4	19	3	3	3	3	12	3	3	3	4	13	4	3	3	3	4	17	5	3	3	4	3	18
2	5	5	3	5	5	4	27	5	5	5	5	4	24	3	3	4	4	14	4	4	4	4	16	4	4	4	3	4	19	5	4	5	5	5	24
3	5	5	5	4	5	5	29	5	5	5	5	5	25	4	4	4	5	17	5	5	5	5	20	5	5	5	5	5	25	5	5	5	5	5	25
4	4	4	3	4	4	4	23	4	4	4	4	4	20	4	4	4	4	16	4	4	4	4	16	4	4	4	4	4	20	4	3	4	4	4	19
5	5	3	5	5	5	5	28	4	4	4	4	4	20	5	5	5	5	20	5	5	5	5	20	4	4	4	5	5	22	5	5	5	5	3	23
6	5	5	3	5	4	5	27	5	5	4	4	4	22	3	3	4	4	14	4	4	4	4	16	4	4	4	4	4	20	5	5	4	4	4	22
7	5	4	4	4	5	3	25	4	5	3	3	4	19	3	3	4	4	14	4	4	5	4	17	4	4	5	4	4	21	4	5	4	5	4	22
8	4	5	4	5	3	4	25	4	4	4	5	4	21	4	4	4	4	16	4	4	4	5	17	5	5	4	4	4	22	5	5	5	5	4	24
9	4	4	4	4	5	4	25	5	5	4	4	4	22	4	4	4	4	16	4	5	5	5	19	5	4	5	4	4	22	5	4	3	4	4	20
10	4	5	4	4	5	4	26	5	5	5	4	4	23	5	4	5	4	18	5	4	4	5	18	4	4	5	5	5	23	5	4	4	5	4	22
11	5	5	3	4	4	3	24	5	5	3	4	3	20	3	3	4	3	13	4	4	4	4	16	3	3	3	3	3	15	4	1	3	4	1	13
12	1	1	1	1	1	1	6	1	1	1	1	1	5	1	1	1	1	4	1	1	1	1	4	2	2	2	2	2	10	2	2	2	2	2	10
13	3	4	3	2	4	4	20	4	4	4	4	4	20	3	3	3	3	12	3	3	3	3	12	4	3	3	3	3	16	4	3	3	3	2	15
14	5	3	4	5	4	5	26	4	4	4	4	4	20	4	4	4	4	16	4	4	4	4	16	4	4	4	4	4	20	4	4	4	4	3	19
15	5	5	4	5	5	5	29	5	5	5	5	5	25	5	5	5	5	20	5	5	5	5	20	5	5	5	5	5	25	5	5	5	5	5	25
16	5	5	4	5	4	5	28	5	5	4	4	3	21	3	3	3	4	13	4	3	4	5	16	5	5	5	5	5	25	5	5	5	5	4	24
17	5	5	5	5	5	5	30	5	5	5	5	5	25	5	5	5	5	20	5	5	5	5	20	5	5	5	5	5	25	5	5	5	5	5	25
18	4	4	4	4	4	5	25	4	4	4	4	4	20	4	4	4	4	16	4	4	4	5	17	4	5	4	5	3	21	4	5	4	5	4	22
19	5	5	5	4	4	4	27	5	5	5	5	4	24	3	3	4	4	14	4	4	4	4	16	4	4	4	4	4	20	5	5	5	5	5	25
20	5	5	5	5	5	5	30	5	5	5	5	5	25	4	4	4	4	16	5	5	5	5	20	5	5	5	5	5	25	5	5	5	5	5	25
21	5	5	5	4	4	4	27	5	5	5	4	3	22	4	4	4	4	16	4	4	4	4	16	4	4	4	4	4	20	5	4	4	4	3	20
22	4	5	4	4	4	4	25	4	4	4	5	4	21	4	4	4	4	16	4	4	4	4	16	3	3	3	4	4	17	4	4	3	4	3	18
23	5	5	3	3	3	1	20	1	5	5	5	3	19	2	2	3	3	10	3	3	3	3	12	3	3	3	3	3	15	3	3	3	3	3	15

24	4	2	3	2	4	5	20	4	4	3	3	2	16	5	3	3	3	14	4	4	3	4	15	3	4	4	4	3	18	4	4	3	5	3	19
25	4	5	4	3	5	5	26	4	5	4	5	5	23	3	3	4	4	14	5	4	4	5	18	4	4	4	5	5	22	5	4	4	5	4	22
26	3	3	3	3	3	3	18	3	3	3	3	3	15	3	3	3	3	12	3	3	3	3	12	3	3	3	3	3	15	3	3	3	3	3	15
27	5	5	4	2	4	5	25	4	4	4	4	4	20	3	3	3	3	12	4	4	4	4	16	4	4	4	4	4	20	4	4	3	4	3	18
28	5	5	5	5	5	5	30	5	5	5	5	4	24	4	4	4	4	16	5	5	4	5	19	4	4	4	4	4	20	5	4	4	5	3	21
29	4	5	4	5	5	5	28	4	4	3	5	4	20	4	3	5	4	16	4	4	5	5	18	4	4	5	3	4	20	4	5	5	4	4	22
30	5	5	5	5	5	5	30	5	5	5	5	5	25	5	5	5	5	20	5	5	5	5	20	4	5	5	5	5	24	5	5	5	5	5	25
31	4	4	4	5	5	4	26	5	5	5	4	3	22	4	4	4	4	16	4	4	4	4	16	5	3	4	4	4	20	5	4	4	4	3	20
32	5	4	5	4	5	5	28	5	5	4	5	5	24	3	3	3	3	12	3	3	3	4	13	4	3	4	4	5	20	5	4	3	4	2	18
33	3	3	3	2	3	3	17	3	3	2	3	2	13	3	3	3	3	12	3	3	3	3	12	3	3	3	3	3	15	3	3	3	3	3	15
34	5	5	4	5	4	5	28	5	4	5	5	4	23	5	4	5	5	19	5	5	4	5	19	5	5	4	5	4	23	5	4	5	4	5	23
35	5	5	4	4	4	5	27	5	5	5	4	4	23	5	5	5	5	20	5	5	5	5	20	5	5	5	5	5	25	5	5	4	5	4	23
36	3	3	3	3	3	3	18	4	4	4	4	4	20	4	4	4	4	16	4	4	4	4	16	4	4	4	4	4	20	4	4	4	4	4	20
37	3	3	3	3	3	3	18	3	3	3	3	3	15	3	3	3	3	12	3	3	3	3	12	3	3	3	3	3	15	3	3	3	3	3	15
38	4	2	4	3	5	4	22	3	4	3	2	3	15	3	3	3	4	13	3	3	3	3	12	2	2	2	2	2	10	5	3	2	3	2	15
39	4	5	4	4	4	4	25	4	4	4	4	4	20	5	4	4	4	17	4	4	4	4	16	4	4	5	4	5	22	5	5	5	5	5	25
40	4	4	4	4	4	4	24	4	4	4	4	4	20	4	4	4	4	16	4	4	4	4	16	4	4	4	4	4	20	4	4	4	4	3	19
41	4	4	4	4	4	4	24	4	4	4	4	4	20	3	4	4	4	15	4	4	4	4	16	4	4	4	4	4	20	4	4	4	4	4	20
42	5	4	4	3	4	5	25	4	5	5	5	4	23	4	5	5	5	19	4	4	4	4	16	3	4	4	4	4	19	5	5	5	5	4	24
43	5	5	5	5	5	5	30	5	5	5	5	5	25	5	5	5	5	20	5	5	5	5	20	5	5	5	5	5	25	5	5	5	5	5	25
44	4	5	4	5	4	4	26	3	4	4	4	4	19	4	4	5	4	17	3	3	3	4	13	3	4	3	3	5	18	5	3	3	4	3	18
45	4	4	4	4	4	4	24	4	4	4	4	4	20	3	4	3	3	13	4	3	4	3	14	3	4	4	3	2	16	4	2	2	3	1	12
46	5	5	3	5	5	3	26	5	5	5	5	5	25	3	3	3	3	12	3	3	3	3	12	3	3	3	3	3	15	5	3	3	3	3	17
47	4	5	3	3	4	3	22	4	3	4	3	4	18	4	4	4	4	16	4	3	3	4	14	4	3	4	4	4	19	4	4	4	4	3	19
48	4	5	4	4	4	4	25	4	4	4	4	4	20	4	4	4	4	16	4	4	4	4	16	4	4	4	4	4	20	5	4	4	4	4	21
49	5	5	3	4	4	4	25	4	4	3	3	4	18	4	4	4	4	16	4	4	4	4	16	3	4	3	3	4	17	4	3	3	5	3	18
50	5	4	5	4	5	5	28	5	5	4	4	4	22	5	5	4	4	18	5	5	5	4	19	4	4	4	3	3	18	5	4	4	4	3	20
51	4	4	4	4	3	4	23	4	4	4	4	4	20	2	4	3	4	13	3	3	3	2	11	4	4	3	3	2	16	4	4	2	4	3	17
52	4	3	3	3	4	3	20	3	3	3	3	3	15	4	3	3	4	14	3	4	3	3	13	3	3	3	3	4	16	4	3	3	4	3	17

53	4	4	3	4	3	3	21	4	4	4	4	3	19	3	3	3	3	12	3	3	3	4	13	4	3	3	3	3	16	4	3	4	4	3	18
54	4	4	4	4	4	4	24	5	5	5	5	4	24	3	3	3	3	12	4	4	3	4	15	3	4	4	4	4	19	4	3	3	4	3	17
55	4	4	3	4	3	3	21	4	4	4	4	4	20	3	3	2	3	11	3	3	3	3	12	3	3	3	3	3	15	5	4	4	4	1	18
56	1	1	1	1	1	1	6	1	1	1	1	1	5	1	1	1	1	4	1	1	1	1	4	2	2	2	2	2	10	1	2	2	2	2	9
57	4	4	4	4	5	4	25	5	4	4	4	4	21	4	4	4	3	15	4	4	4	4	16	5	5	4	4	4	22	5	4	4	5	4	22
58	5	4	4	4	4	4	25	4	5	4	4	4	21	4	4	4	4	16	4	4	4	4	16	4	4	4	4	4	20	5	5	5	5	4	24
59	4	4	4	4	3	5	24	5	4	4	4	4	21	3	3	4	4	14	4	4	4	4	16	4	4	4	5	4	21	4	4	4	4	4	20
60	3	5	5	3	3	5	24	1	5	3	1	1	11	5	5	5	5	20	4	4	3	3	14	2	3	3	3	3	14	4	2	1	1	1	9
61	5	4	3	3	4	4	23	5	5	4	4	4	22	3	4	4	4	15	4	3	4	4	15	4	3	4	4	4	19	4	4	4	4	3	19
62	5	4	5	4	5	5	28	5	5	5	5	5	25	4	4	4	5	17	5	5	5	5	20	4	5	5	4	4	22	5	4	4	5	4	22
63	4	5	3	2	2	5	21	4	4	3	4	3	18	3	3	3	4	13	4	4	3	4	15	3	3	3	3	4	16	4	3	3	4	3	17
64	4	4	4	4	4	4	24	4	4	4	4	4	20	3	4	3	3	13	4	3	4	3	14	3	4	4	3	2	16	4	2	2	3	1	12
65	3	5	5	5	5	5	28	5	5	5	5	5	25	5	5	5	5	20	4	4	4	4	16	4	4	4	4	4	20	4	4	4	4	4	20
66	5	4	4	4	4	4	25	5	5	5	5	4	24	4	4	4	4	16	4	4	4	5	17	5	4	4	5	5	23	5	5	5	5	3	23
67	4	4	5	4	4	4	25	5	4	4	4	4	21	5	4	4	4	17	4	4	4	4	16	4	4	4	4	4	20	4	4	3	4	3	18
68	5	5	5	5	5	5	30	5	5	5	5	5	25	5	5	5	5	20	5	5	5	5	20	5	5	5	5	5	25	5	5	5	5	5	25
69	3	4	3	3	3	4	20	3	3	3	4	3	16	4	4	3	3	14	4	4	3	3	14	3	3	3	3	3	15	3	3	3	3	3	15
70	4	4	4	4	4	4	24	4	4	4	4	4	20	4	4	4	4	16	4	4	4	4	16	4	4	4	4	4	20	4	4	4	4	4	20
71	5	5	4	3	5	5	27	5	4	4	5	5	23	3	4	4	3	14	4	4	4	4	16	4	4	4	5	5	22	5	4	3	4	3	19
72	5	5	4	3	3	5	25	3	5	5	3	3	19	3	3	4	4	14	4	4	4	4	16	4	4	4	3	3	18	5	3	3	5	3	19
73	4	4	4	3	4	4	23	4	4	4	2	3	17	4	4	4	4	16	3	4	3	3	13	3	3	3	3	3	15	4	3	3	4	3	17
74	5	5	4	4	5	5	28	5	5	5	4	4	23	5	5	5	5	20	5	5	5	5	20	5	5	5	5	5	25	5	5	4	4	4	22
75	5	5	5	5	5	5	30	5	5	5	5	5	25	5	5	5	5	20	5	5	5	5	20	5	5	5	5	5	25	5	5	5	5	5	25
76	4	5	4	4	4	3	24	5	4	4	5	4	22	4	4	5	5	18	4	5	5	4	18	5	4	4	5	4	22	5	4	4	4	5	22
77	5	4	5	4	5	4	27	4	4	5	4	4	21	4	4	4	4	16	5	4	4	4	17	4	4	4	4	5	21	4	4	4	4	4	20
78	5	5	5	5	5	5	30	5	5	5	5	5	25	4	5	5	4	18	4	4	4	5	17	4	5	4	4	5	22	4	4	4	4	3	19
79	5	5	5	5	5	5	30	5	5	5	5	5	25	4	4	4	4	16	5	4	4	5	18	4	4	4	4	4	20	4	4	3	3	3	17
80	4	4	4	4	4	4	24	4	4	4	4	4	20	3	4	4	4	15	4	4	4	4	16	4	4	4	4	4	20	4	4	4	4	4	20
81	5	5	4	4	4	5	27	5	5	5	5	5	25	5	5	5	5	20	5	5	5	5	20	5	5	5	4	5	24	5	5	5	5	5	25

82	5	5	5	5	5	5	30	5	5	4	5	5	24	3	4	4	4	15	5	5	5	5	20	5	4	5	5	5	24	5	5	5	5	5	25
83	4	4	4	4	3	4	23	4	4	4	4	4	20	2	4	3	4	13	3	3	3	2	11	4	4	3	3	2	16	4	4	2	4	3	17
84	3	5	4	5	5	5	27	4	5	4	5	5	23	5	4	4	5	18	3	4	4	5	16	5	3	5	4	5	22	4	4	3	5	4	20
85	4	4	3	4	3	4	22	3	4	3	3	4	17	3	3	3	4	13	4	3	3	3	13	3	3	3	3	4	16	4	3	3	3	2	15
86	4	3	4	4	4	4	23	4	4	4	4	4	20	3	3	4	4	14	4	4	4	4	16	3	2	3	3	3	14	4	3	3	3	2	15
87	4	4	4	3	5	5	25	4	3	4	3	5	19	3	4	4	4	15	3	4	4	4	15	3	4	4	4	4	19	5	4	4	4	2	19
88	5	5	3	4	4	3	24	3	3	3	4	3	16	3	3	4	4	14	3	3	3	3	12	3	4	3	3	4	17	5	3	3	4	3	18
89	3	5	4	5	5	5	27	4	5	4	5	5	23	5	4	4	5	18	3	4	4	5	16	5	3	5	4	5	22	4	4	3	5	4	20
90	4	4	3	3	3	3	20	3	4	3	4	3	17	3	3	3	3	12	3	3	3	3	12	3	3	3	3	3	15	3	3	3	3	3	15
91	5	5	5	5	5	5	30	5	5	5	5	5	25	4	4	4	4	16	4	4	4	4	16	4	4	4	4	4	20	5	4	4	4	4	21
92	5	5	4	4	4	5	27	5	5	4	5	4	23	4	4	4	4	16	4	4	4	5	17	4	4	4	4	4	20	4	3	4	4	3	18
93	5	4	4	3	4	4	24	5	5	4	4	4	22	3	4	4	4	15	4	3	3	4	14	3	3	4	3	4	17	4	4	3	4	4	19
94	5	5	3	4	4	5	26	5	5	5	5	3	23	3	3	4	4	14	5	3	4	5	17	4	5	5	4	4	22	5	5	5	5	4	24
95	4	4	3	4	4	4	23	3	4	4	3	3	17	3	3	3	3	12	3	3	4	4	14	3	3	4	3	4	17	4	3	3	4	4	18
96	4	4	4	4	4	4	24	4	4	4	4	4	20	4	4	4	4	16	4	4	4	4	16	4	4	4	4	4	20	4	4	4	4	4	20
97	4	4	4	4	4	4	24	4	4	4	4	4	20	4	4	4	4	16	4	4	4	4	16	4	4	4	4	4	20	4	4	4	4	4	20
98	5	5	5	5	5	5	30	4	4	4	4	4	20	3	3	3	3	12	3	3	3	4	13	4	4	4	4	4	20	4	4	4	4	3	19
99	5	5	3	5	5	5	28	4	4	5	4	4	21	3	3	3	3	12	3	3	3	5	14	4	4	4	4	4	20	5	4	5	5	5	24
100	5	4	4	3	5	5	26	4	4	5	5	3	21	2	3	4	3	12	4	4	4	4	16	4	4	4	4	4	20	4	4	4	5	4	21
101	4	4	5	5	4	4	26	4	5	4	5	5	23	5	5	4	4	18	5	5	4	5	19	5	5	5	4	4	23	4	4	4	5	4	21
102	4	4	3	5	5	5	26	4	5	4	5	5	23	3	3	3	3	12	4	4	4	4	16	4	4	4	4	4	20	4	4	4	4	3	19
103	5	3	4	4	5	5	26	4	4	5	4	4	21	3	3	4	4	14	4	4	4	4	16	4	4	4	4	4	20	4	4	4	4	4	20
104	5	5	5	5	5	5	30	5	5	5	5	5	25	5	5	5	5	20	5	5	5	5	20	5	5	5	5	5	25	5	5	5	5	5	25
105	4	4	3	2	3	4	20	4	4	4	2	3	17	3	3	3	3	12	4	4	4	4	16	4	4	4	4	4	20	4	4	4	4	1	17
106	4	4	4	4	4	4	24	4	4	4	4	4	20	4	4	4	4	16	4	4	4	4	16	4	4	4	4	4	20	4	4	4	4	4	20
107	5	4	2	4	5	5	25	3	5	5	4	4	21	3	3	3	3	12	2	2	3	3	10	2	3	4	4	4	17	5	4	4	4	4	21
108	4	4	2	4	3	4	21	4	4	3	4	4	19	3	3	4	3	13	4	3	3	4	14	2	3	2	4	4	15	4	3	2	4	3	16
109	4	4	4	5	5	4	26	4	4	4	4	4	20	3	4	3	3	13	4	4	4	3	15	4	4	4	4	4	20	5	4	4	4	3	20
110	5	5	3	4	4	5	26	5	5	5	5	3	23	3	3	4	4	14	5	3	4	5	17	4	5	5	4	4	22	5	5	5	5	4	24

111	5	4	4	4	5	4	26	3	5	4	4	3	19	4	4	3	4	15	4	5	3	4	16	3	4	4	4	5	20	5	4	4	5	4	22
112	5	5	5	4	4	4	27	5	5	5	5	4	24	5	4	4	4	17	4	4	4	5	17	4	4	4	4	4	20	4	3	4	4	3	18
113	5	4	4	4	5	5	27	5	5	5	4	5	24	5	5	5	5	20	5	3	4	4	16	3	3	3	3	3	15	4	3	4	5	5	21
114	5	5	5	5	5	5	30	5	5	5	5	5	25	5	5	5	5	20	5	3	5	5	18	5	5	3	5	5	23	5	4	5	5	3	22
115	5	3	4	3	4	5	24	4	4	5	5	3	21	4	4	3	3	14	5	4	4	5	18	5	5	4	5	5	24	5	5	5	5	5	25
116	4	5	5	5	4	4	27	5	5	5	5	4	24	4	4	3	4	15	4	3	3	4	14	4	4	4	4	4	20	4	4	3	4	2	17
117	5	5	2	4	5	5	26	3	4	5	5	4	21	1	1	1	3	6	5	4	3	4	16	3	4	4	4	4	19	4	3	4	5	4	20
118	4	4	3	4	3	3	21	4	4	4	4	3	19	3	3	3	3	12	3	4	3	4	14	5	5	5	4	5	24	4	4	3	4	4	19
119	5	4	4	4	4	4	25	3	4	3	3	3	16	3	3	4	4	14	4	2	2	3	11	2	3	2	2	3	12	4	2	4	4	1	15
120	5	4	3	4	4	4	24	5	4	4	4	3	20	3	3	3	4	13	4	4	4	4	16	4	4	4	4	4	20	4	4	3	4	3	18
121	5	5	5	4	5	5	29	5	5	5	5	5	25	5	5	5	5	20	5	5	5	5	20	5	5	5	5	5	25	5	5	5	5	5	25
122	4	3	4	4	4	4	23	3	4	3	4	4	18	4	4	4	4	16	4	4	3	4	15	3	3	3	3	3	15	4	3	3	3	3	16
123	4	4	3	4	3	4	22	4	4	3	4	3	18	4	4	4	3	15	4	4	3	3	14	3	3	3	3	3	15	4	2	2	4	2	14
124	4	4	5	4	4	4	25	5	5	4	5	4	23	4	4	3	4	15	4	4	4	4	16	4	3	3	4	4	18	4	4	3	5	2	18
125	5	5	3	4	4	4	25	5	5	4	4	4	22	4	4	3	3	14	3	3	3	3	12	4	4	4	4	4	20	4	4	4	4	4	20
126	5	5	5	5	5	5	30	5	5	5	5	5	25	5	5	5	5	20	5	5	5	5	20	5	5	5	5	5	25	5	5	5	5	5	25
127	4	2	3	4	4	5	22	1	2	2	4	4	13	3	3	4	4	14	2	2	2	3	9	2	2	2	2	3	11	4	3	2	4	3	16
128	4	4	3	3	4	3	21	4	4	3	4	3	18	3	3	3	3	12	3	3	3	3	12	3	3	3	3	4	16	4	3	3	4	3	17
129	4	5	3	5	4	4	25	3	4	3	3	4	17	3	3	4	3	13	4	4	4	5	17	4	4	3	4	4	19	5	4	4	4	2	19
130	4	4	4	4	4	4	24	4	5	5	5	5	24	5	5	4	5	19	4	4	4	5	17	4	4	4	4	4	20	5	5	4	5	3	22
131	4	4	4	4	4	4	24	4	4	4	4	4	20	4	4	4	4	16	4	4	4	4	16	5	5	5	5	5	25	5	5	5	5	5	25
132	5	4	3	4	4	4	24	3	4	3	3	4	17	3	2	4	4	13	3	4	4	3	14	4	4	4	4	4	20	3	4	4	4	4	19
133	5	5	5	5	5	5	30	5	5	5	5	5	25	4	4	4	4	16	4	4	4	4	16	4	4	4	4	4	20	4	4	4	5	4	21
134	4	1	4	3	3	3	18	4	4	3	3	4	18	4	4	4	4	16	1	1	1	4	7	3	1	1	1	1	7	4	4	4	4	4	20
135	1	1	2	1	2	3	10	3	2	2	1	3	11	3	3	3	2	11	2	2	2	2	8	3	3	3	3	3	15	1	3	3	2	3	12
136	5	4	3	3	4	3	22	4	5	3	4	4	20	2	3	3	3	11	3	4	4	4	15	4	4	4	4	4	20	4	4	4	4	3	19
137	4	4	3	3	3	4	21	3	4	3	4	3	17	2	2	3	3	10	3	3	3	4	13	3	3	3	3	4	16	4	3	3	3	3	16
138	5	4	4	5	4	4	26	5	4	4	4	4	21	4	4	4	4	16	4	4	4	4	16	4	4	4	4	4	20	4	4	4	4	3	19
139	4	4	4	3	4	5	24	5	5	4	4	4	22	4	4	4	4	16	4	4	4	4	16	3	4	4	4	4	19	5	4	3	4	4	20

140	5	4	4	4	4	5	26	5	4	5	5	5	24	5	4	5	5	19	3	4	4	5	16	4	5	4	4	5	22	4	5	3	4	5	21
141	4	2	4	4	4	4	22	4	4	4	4	4	20	3	3	4	3	13	3	3	3	3	12	3	3	3	3	3	15	4	3	3	3	2	15
142	4	5	3	3	4	5	24	4	5	4	4	3	20	4	4	3	4	15	5	4	4	5	18	4	4	4	4	4	20	5	4	4	4	3	20
143	5	5	3	4	5	5	27	5	5	5	5	4	24	4	4	4	4	16	4	4	4	5	17	4	4	4	4	4	20	4	4	4	4	3	19
144	5	5	4	5	5	5	29	4	5	4	5	5	23	4	4	5	4	17	5	4	4	5	18	4	5	5	5	5	24	5	4	4	5	4	22
145	5	5	5	3	4	5	27	3	4	4	4	4	19	3	3	3	3	12	3	4	4	4	15	4	4	4	4	5	21	5	5	5	5	5	25
146	4	5	4	5	4	5	27	5	5	4	4	4	22	3	4	4	4	15	4	4	4	4	16	3	3	3	3	3	15	4	3	3	4	3	17
147	5	3	5	5	5	5	28	5	4	4	5	5	23	3	5	5	5	18	3	3	3	5	14	5	5	5	5	5	25	5	5	5	5	5	25
148	5	3	4	4	5	4	25	3	4	3	3	4	17	4	4	4	4	16	3	3	3	4	13	3	3	3	3	3	15	4	3	3	4	2	16
149	4	4	3	4	4	4	23	4	5	4	4	3	20	4	4	4	4	16	4	3	3	3	13	3	3	3	3	3	15	4	4	3	4	4	19
150	4	4	4	4	4	3	23	4	5	4	4	5	22	4	4	4	4	16	4	4	4	4	16	4	4	5	5	5	23	5	5	5	5	5	25
151	5	5	5	5	5	5	30	5	5	5	5	5	25	5	5	5	5	20	5	5	5	5	20	5	5	5	5	5	25	5	5	5	5	5	25
152	4	4	4	4	4	4	24	4	4	4	4	4	20	3	3	3	3	12	3	3	3	3	12	3	3	3	3	3	15	4	3	3	4	3	17
153	5	5	5	5	5	5	30	5	5	5	5	5	25	4	4	4	4	16	5	5	5	5	20	5	5	5	5	5	25	5	5	5	5	5	25
154	5	5	5	4	5	5	29	5	5	5	5	4	24	4	4	4	4	16	5	5	5	5	20	5	5	5	5	5	25	5	5	5	5	5	25
155	5	4	4	4	4	3	24	4	5	5	5	4	23	4	4	4	4	16	4	4	4	5	17	4	4	5	4	5	22	5	4	4	4	4	21
156	5	5	5	4	4	5	28	3	4	4	3	4	18	4	4	4	4	16	4	4	4	4	16	3	4	3	3	3	16	5	3	3	4	3	18
157	5	5	5	4	4	5	28	3	4	4	3	4	18	4	4	4	4	16	4	4	4	4	16	3	4	3	3	3	16	5	3	3	4	3	18
158	5	5	4	5	5	5	29	5	5	5	3	5	23	5	4	4	4	17	4	4	4	4	16	4	4	4	4	4	20	5	3	3	5	3	19
159	4	4	3	4	3	3	21	4	4	4	4	4	20	3	3	3	4	13	2	2	3	4	11	2	2	3	3	3	13	4	2	2	4	2	14
160	5	5	5	4	4	3	26	4	5	4	5	3	21	4	4	4	4	16	5	4	4	4	17	4	4	4	4	4	20	5	4	3	5	5	22
161	4	4	4	5	5	5	27	4	4	4	4	4	20	4	4	4	4	16	5	5	5	5	20	5	5	5	5	5	25	5	5	5	5	3	23
162	4	4	4	3	5	5	25	5	5	5	5	5	25	2	2	4	4	12	5	5	5	5	20	5	5	5	5	5	25	5	5	5	5	5	25
163	5	4	5	4	4	4	26	4	4	2	5	4	19	4	4	4	4	16	4	4	4	4	16	4	4	4	4	4	20	5	5	5	4	4	23
164	4	4	3	4	4	4	23	5	5	4	5	5	24	4	4	4	4	16	5	5	4	4	18	5	4	5	5	5	24	4	5	5	5	4	23
165	4	3	3	4	5	5	24	4	5	4	4	4	21	3	3	3	3	12	3	3	3	3	12	3	3	3	2	2	13	4	2	3	3	2	14
166	5	5	5	5	5	5	30	5	5	5	5	5	25	5	5	5	5	20	5	5	5	5	20	5	5	5	5	5	25	5	5	5	5	5	25
167	3	3	4	4	4	4	22	4	4	4	3	3	18	3	3	3	3	12	4	4	3	3	14	3	3	3	3	3	15	4	3	3	3	3	16
168	5	5	5	5	5	5	30	5	5	5	5	5	25	4	4	4	4	16	4	4	4	4	16	5	5	5	4	4	23	5	5	5	5	5	25

169	3	4	3	4	3	3	20	3	4	4	3	3	17	3	3	2	2	10	2	3	3	3	11	2	2	3	3	3	13	4	3	3	3	4	17
170	4	4	3	4	5	4	24	4	4	4	5	4	21	4	4	3	3	14	4	4	3	4	15	4	3	3	3	4	17	4	4	4	4	4	20
171	5	4	4	4	4	4	25	5	5	3	4	3	20	3	3	3	5	14	4	4	3	4	15	3	4	3	3	3	16	5	4	4	4	4	21
172	4	4	4	4	4	4	24	3	4	4	4	4	19	4	4	4	4	16	4	4	4	4	16	3	4	4	4	4	19	4	4	3	4	4	19
173	5	4	3	3	5	5	25	4	4	5	5	4	22	4	4	4	3	15	3	4	3	3	13	3	2	3	3	4	15	5	4	3	4	2	18
174	5	4	3	3	5	5	25	4	4	5	5	4	22	4	4	4	3	15	3	4	3	3	13	3	2	3	3	4	15	5	4	3	4	2	18
175	4	5	4	3	4	5	25	4	4	4	4	3	19	5	3	4	4	16	4	4	4	4	16	4	3	4	4	4	19	5	4	3	4	3	19
176	4	4	3	3	3	3	20	4	4	4	4	4	20	4	4	4	4	16	4	4	4	4	16	4	4	4	4	4	20	4	4	4	4	4	20
177	5	5	4	4	4	5	27	3	4	4	4	4	19	4	4	4	4	16	4	4	4	5	17	5	3	4	4	4	20	5	5	5	5	3	23
178	1	3	1	1	2	1	9	5	5	5	1	1	17	1	1	3	3	8	1	2	2	2	7	3	5	4	4	5	21	1	1	1	1	1	5
179	4	5	4	4	4	5	26	4	4	4	4	4	20	3	4	4	4	15	5	5	4	5	19	5	4	5	4	5	23	5	5	4	4	3	21
180	3	4	3	4	4	4	22	4	4	3	4	4	19	4	4	4	4	16	4	4	4	4	16	4	3	4	4	4	19	4	3	4	4	3	18
181	4	4	4	4	4	4	24	4	4	4	4	4	20	4	4	4	4	16	4	4	4	4	16	4	4	4	4	4	20	4	4	3	4	3	18
182	4	5	3	5	3	5	25	4	4	3	2	3	16	3	4	4	4	15	5	5	5	5	20	5	5	5	5	5	25	5	4	4	5	2	20
183	1	1	1	1	1	1	6	1	1	1	1	1	5	3	3	3	3	12	4	3	2	3	12	1	2	1	2	1	7	2	3	2	2	1	10
184	4	4	1	3	4	1	17	4	4	3	3	3	17	3	3	3	3	12	2	2	2	2	8	2	1	3	3	2	11	4	2	2	4	1	13
185	4	3	4	4	4	4	23	3	4	4	4	4	19	4	4	4	4	16	4	4	4	4	16	3	4	3	3	3	16	4	3	3	4	3	17
186	4	4	3	4	4	5	24	3	2	3	2	2	12	5	5	4	5	19	5	5	4	4	18	3	4	4	3	4	18	5	4	3	4	3	19
187	5	5	5	4	4	4	27	5	5	5	5	5	25	3	3	3	3	12	4	4	4	4	16	4	4	4	4	4	20	5	5	5	5	4	24
188	4	4	4	4	4	4	24	4	4	3	3	3	17	3	3	3	3	12	3	3	3	3	12	2	2	2	2	2	10	4	2	2	4	2	14
189	4	5	3	3	4	5	24	5	5	4	4	3	21	4	4	4	5	17	5	4	3	4	16	3	4	4	3	5	19	4	3	3	4	3	17
190	4	4	4	4	4	4	24	4	4	4	4	4	20	4	4	4	4	16	4	4	4	4	16	3	3	4	4	4	18	4	3	3	4	3	17
191	5	5	4	4	5	4	27	4	5	5	5	5	24	4	4	4	4	16	4	4	4	5	17	4	4	3	4	4	19	5	3	4	4	3	19
192	4	2	4	4	4	4	22	4	4	4	4	4	20	4	4	4	4	16	4	4	4	4	16	4	4	4	4	4	20	4	4	4	4	4	20
193	1	1	1	1	1	1	6	1	2	2	1	2	8	1	2	2	2	7	2	2	3	1	8	1	1	1	1	1	5	2	2	2	2	3	11
194	5	5	4	3	5	5	27	3	5	5	5	5	23	4	5	4	4	17	5	5	5	5	20	5	3	5	5	5	23	5	5	5	5	3	23
195	4	4	4	4	4	4	24	4	4	4	4	4	20	4	4	4	4	16	4	4	4	4	16	4	4	4	4	4	20	4	4	4	4	4	20
196	4	4	4	4	4	4	24	4	4	4	3	3	18	4	4	4	4	16	4	3	4	4	15	3	3	3	3	4	16	4	3	4	4	3	18
197	4	4	4	4	5	4	25	4	4	4	4	3	19	4	4	3	3	14	4	4	4	4	16	4	4	4	4	4	20	4	3	3	4	1	15

198	4	4	3	5	5	3	24	5	5	4	3	3	20	4	4	4	3	15	3	3	3	4	13	4	3	4	4	5	20	4	3	3	4	3	17
199	4	4	5	4	4	4	25	5	5	4	4	4	22	4	4	4	4	16	4	4	4	5	17	5	5	4	5	5	24	5	5	4	4	4	22
200	4	4	4	5	4	5	26	3	4	4	5	3	19	4	5	5	4	18	4	4	4	3	15	4	4	5	4	4	21	4	3	3	3	3	16

Lampiran 2. Pengujian validitas dan reliabilitas

1. Variabel Persepsi Manfaat

Correlations

		PM1	PM2	PM3	PM4	PM5	PM6	TOTAL_PM
PM1	Pearson Correlation	1	,334	,518**	,468**	,325	,215	,681**
	Sig. (2-tailed)		,071	,003	,009	,080	,253	,000
	N	30	30	30	30	30	30	30
PM2	Pearson Correlation	,334	1	,288	,279	,150	-,006	,509**
	Sig. (2-tailed)	,071		,122	,135	,430	,974	,004
	N	30	30	30	30	30	30	30
PM3	Pearson Correlation	,518**	,288	1	,412*	,498**	,433*	,766**
	Sig. (2-tailed)	,003	,122		,024	,005	,017	,000
	N	30	30	30	30	30	30	30
PM4	Pearson Correlation	,468**	,279	,412*	1	,401*	,308	,745**
	Sig. (2-tailed)	,009	,135	,024		,028	,098	,000
	N	30	30	30	30	30	30	30
PM5	Pearson Correlation	,325	,150	,498**	,401*	1	,494**	,695**
	Sig. (2-tailed)	,080	,430	,005	,028		,006	,000
	N	30	30	30	30	30	30	30
PM6	Pearson Correlation	,215	-,006	,433*	,308	,494**	1	,623**
	Sig. (2-tailed)	,253	,974	,017	,098	,006		,000
	N	30	30	30	30	30	30	30

TOTAL_	Pearson Correlation	,681**	,509**	,766**	,745**	,695**	,623**	1
PM	Sig. (2-tailed)	,000	,004	,000	,000	,000	,000	
	N	30	30	30	30	30	30	30

**. Correlation is significant at the 0.01 level (2-tailed).

*. Correlation is significant at the 0.05 level (2-tailed).

Reliability Statistics

Cronbach's Alpha	N of Items
,742	6

2. Variabel Persepsi Kemudahan

Correlations

		PK1	PK2	PK3	PK4	PK5	TOTAL_PK
PK1	Pearson Correlation	1	,503**	,357	,194	,368*	,694**
	Sig. (2-tailed)		,005	,053	,303	,046	,000
	N	30	30	30	30	30	30
PK2	Pearson Correlation	,503**	1	,655**	,433*	,327	,762**
	Sig. (2-tailed)	,005		,000	,017	,078	,000
	N	30	30	30	30	30	30
PK3	Pearson Correlation	,357	,655**	1	,602**	,336	,775**
	Sig. (2-tailed)	,053	,000		,000	,070	,000
	N	30	30	30	30	30	30
PK4	Pearson Correlation	,194	,433*	,602**	1	,625**	,750**
	Sig. (2-tailed)	,303	,017	,000		,000	,000
	N	30	30	30	30	30	30
PK5	Pearson Correlation	,368*	,327	,336	,625**	1	,726**
	Sig. (2-tailed)	,046	,078	,070	,000		,000
	N	30	30	30	30	30	30
TOTAL_PK	Pearson Correlation	,694**	,762**	,775**	,750**	,726**	1
	Sig. (2-tailed)	,000	,000	,000	,000	,000	
	N	30	30	30	30	30	30

**. Correlation is significant at the 0.01 level (2-tailed).

*. Correlation is significant at the 0.05 level (2-tailed).

Reliability Statistics

Cronbach's Alpha	N of Items
,781	5

3. Variabel Tingkat Kepercayaan

Correlations

		TK1	TK2	TK3	TK4	TOTAL_TK
TK1	Pearson Correlation	1	,851**	,704**	,629**	,893**
	Sig. (2-tailed)		,000	,000	,000	,000
	N	30	30	30	30	30
TK2	Pearson Correlation	,851**	1	,735**	,794**	,939**
	Sig. (2-tailed)	,000		,000	,000	,000
	N	30	30	30	30	30
TK3	Pearson Correlation	,704**	,735**	1	,847**	,898**
	Sig. (2-tailed)	,000	,000		,000	,000
	N	30	30	30	30	30
TK4	Pearson Correlation	,629**	,794**	,847**	1	,889**
	Sig. (2-tailed)	,000	,000	,000		,000
	N	30	30	30	30	30
TOTAL_TK	Pearson Correlation	,893**	,939**	,898**	,889**	1
	Sig. (2-tailed)	,000	,000	,000	,000	
	N	30	30	30	30	30

**. Correlation is significant at the 0.01 level (2-tailed).

Reliability Statistics

Cronbach's Alpha	N of Items
,923	4

4. Variabel Sikap

Correlations

		SK1	SK2	SK3	SK4	TOTAL_SK
SK1	Pearson Correlation	1	,859**	,753**	,797**	,934**
	Sig. (2-tailed)		,000	,000	,000	,000
	N	30	30	30	30	30
SK2	Pearson Correlation	,859**	1	,826**	,691**	,927**
	Sig. (2-tailed)	,000		,000	,000	,000
	N	30	30	30	30	30
SK3	Pearson Correlation	,753**	,826**	1	,717**	,907**
	Sig. (2-tailed)	,000	,000		,000	,000
	N	30	30	30	30	30
SK4	Pearson Correlation	,797**	,691**	,717**	1	,877**
	Sig. (2-tailed)	,000	,000	,000		,000
	N	30	30	30	30	30
TOTAL_SK	Pearson Correlation	,934**	,927**	,907**	,877**	1
	Sig. (2-tailed)	,000	,000	,000	,000	
	N	30	30	30	30	30

**. Correlation is significant at the 0.01 level (2-tailed).

Reliability Statistics

Cronbach's Alpha	N of Items
,923	4

5. Variabel Minat

Correlations

		MT1	MT2	MT3	MT4	MT5	TOTAL_MT
MT1	Pearson Correlation	1	,600**	,654**	,486**	,575**	,782**
	Sig. (2-tailed)		,000	,000	,007	,001	,000
	N	30	30	30	30	30	30
MT2	Pearson Correlation	,600**	1	,744**	,714**	,469**	,848**
	Sig. (2-tailed)	,000		,000	,000	,009	,000
	N	30	30	30	30	30	30
MT3	Pearson Correlation	,654**	,744**	1	,631**	,647**	,880**
	Sig. (2-tailed)	,000	,000		,000	,000	,000
	N	30	30	30	30	30	30
MT4	Pearson Correlation	,486**	,714**	,631**	1	,698**	,852**
	Sig. (2-tailed)	,007	,000	,000		,000	,000
	N	30	30	30	30	30	30
MT5	Pearson Correlation	,575**	,469**	,647**	,698**	1	,812**
	Sig. (2-tailed)	,001	,009	,000	,000		,000
	N	30	30	30	30	30	30
TOTAL_MT	Pearson Correlation	,782**	,848**	,880**	,852**	,812**	1
	Sig. (2-tailed)	,000	,000	,000	,000	,000	
	N	30	30	30	30	30	30

**. Correlation is significant at the 0.01 level (2-tailed).

Reliability Statistics

Cronbach's Alpha	N of Items
,892	5

6. Variabel Perilaku Konsumen

Correlations

		PR1	PR2	PR3	PR4	PR5	TOTAL_PR
PR1	Pearson Correlation	1	,482**	,523**	,619**	,397*	,692**
	Sig. (2-tailed)		,007	,003	,000	,030	,000
	N	30	30	30	30	30	30
PR2	Pearson Correlation	,482**	1	,758**	,723**	,624**	,859**
	Sig. (2-tailed)	,007		,000	,000	,000	,000
	N	30	30	30	30	30	30
PR3	Pearson Correlation	,523**	,758**	1	,683**	,759**	,904**
	Sig. (2-tailed)	,003	,000		,000	,000	,000
	N	30	30	30	30	30	30
PR4	Pearson Correlation	,619**	,723**	,683**	1	,642**	,867**
	Sig. (2-tailed)	,000	,000	,000		,000	,000
	N	30	30	30	30	30	30
PR5	Pearson Correlation	,397*	,624**	,759**	,642**	1	,845**
	Sig. (2-tailed)	,030	,000	,000	,000		,000
	N	30	30	30	30	30	30
TOTAL_PR	Pearson Correlation	,692**	,859**	,904**	,867**	,845**	1
	Sig. (2-tailed)	,000	,000	,000	,000	,000	
	N	30	30	30	30	30	30

**. Correlation is significant at the 0.01 level (2-tailed).

*. Correlation is significant at the 0.05 level (2-tailed).

Reliability Statistics

Cronbach's Alpha	N of Items
,889	5

Lampiran 3. Karakteristik responden

Jenis Kelamin

		Frequency	Percent	Valid Percent	Cumulative Percent
Valid	Laki-Laki	107	53,5	53,5	53,5
	Perempuan	93	46,5	46,5	100,0
	Total	200	100,0	100,0	

Jumlah Penghasilan

		Frequency	Percent	Valid Percent	Cumulative Percent
Valid	< 1 juta	27	13,5	13,5	13,5
	2-3 juta	78	39,0	39,0	52,5
	> 3 juta	95	47,5	47,5	100,0
	Total	200	100,0	100,0	

Usia

		Frequency	Percent	Valid Percent	Cumulative Percent
Valid	<20 tahun	1	,5	,5	,5
	20 tahun - 30 tahun	174	87,0	87,0	87,5
	31 tahun - 40 tahun	25	12,5	12,5	100,0
	Total	200	100,0	100,0	

Jenis Pekerjaan

		Frequency	Percent	Valid Percent	Cumulative Percent
Valid	PNS	4	2,0	2,0	2,0
	Pegawai Swasta	124	62,0	62,0	64,0
	Karyawan BUMN/BUMD	6	3,0	3,0	67,0
	Pelajar/mahasiswa	50	25,0	25,0	92,0
	Lainnya	16	8,0	8,0	100,0
	Total	200	100,0	100,0	

Daerah Tempat Tinggal

		Frequency	Percent	Valid Percent	Cumulative Percent
Valid	JAWA TENGAH	92	46,0	46,0	46,0
	JAWA TIMUR	16	8,0	8,0	54,0
	JAWA BARAT	31	15,5	15,5	69,5
	DIY	51	25,5	25,5	95,0
	LAINNYA	10	5,0	5,0	100,0
	Total	200	100,0	100,0	

Sudah Berapa Lama Menggunakan Emoney

		Frequency	Percent	Valid Percent	Cumulative Percent
Valid	< 1 TAHUN	61	30,5	30,5	30,5
	> 1 TAHUN	139	69,5	69,5	100,0
	Total	200	100,0	100,0	

Lampiran 4 : Hasil Penilaian Responden terhadap Indikator Penelitian

Descriptive Statistics

	N	Minimum	Maximum	Mean	Std. Deviation
PM1	200	1,00	5,00	4,3000	,83876
PM2	200	1,00	5,00	4,1950	,91716
PM3	200	1,00	5,00	3,8250	,91023
PM4	200	1,00	5,00	3,9200	,90426
PM5	200	1,00	5,00	4,1300	,84061
PM6	200	1,00	5,00	4,1950	,91716
TOTAL_PM				4,0942	0,70742
PK1	200	1,00	5,00	4,1100	,91767
PK2	200	1,00	5,00	4,3200	,77499
PK3	200	1,00	5,00	4,0650	,84519
PK4	200	1,0	5,0	4,070	,9485
PK5	200	1,00	5,00	3,8950	,86470
TOTAL_PK				4,0920	0,72979
TK1	200	1,00	5,00	3,6750	,88504
TK2	200	1,00	5,00	3,7250	,80786
TK3	200	1,00	5,00	3,8000	,76349
TK4	200	1,00	5,00	3,8350	,74198
TOTAL_TK				3,7588	0,71829
SK1	200	1,00	5,00	3,8950	,86470
SK2	200	1,00	5,00	3,8200	,81912
SK3	200	1,00	5,00	3,7700	,80019
SK4	200	1,00	5,00	4,0300	,84419
TOTAL_SK				3,8788	0,75020
MT1	200	1,00	5,00	3,7900	,88306
MT2	200	1,00	5,00	3,8000	,88539
MT3	200	1,00	5,00	3,8450	,85712
MT4	200	1,00	5,00	3,8100	,83510
MT5	200	1,00	5,00	3,9450	,88651
TOTAL_MT				3,8380	0,78360
PR1	200	1,00	5,00	4,3400	,75315
PR2	200	1,00	5,00	3,8450	,90280
PR3	200	1,00	5,00	3,7200	,93055
PR4	200	1,00	5,00	4,1550	,77717
PR5	200	1,00	5,00	3,4200	1,05316
TOTAL_PR				3,8960	0,74698
Valid N (listwise)	200				

LAMPIRAN 5 *Goodness of Fit* untuk masing-masing variabel

Tabel 1.*Goodness of Fit* untuk masing-masing variabel

Variabel	X2 sangatkecil	P (≥0,05)	CMIN/ DF ≤ 2	RMSEA≤ 0,08	GFI ≥ 0,90	TLI ≥ 0,90	CFI ≥ 0,90	Ket
Persepsi manfaat	18,042	0,051	2,005	0,079	0,966	0,956	0,974	Baik
Persepsi Kemudahan	10,012	0,052	2,002	0,078	0,929	0,890	0,945	Baik
Tingkat Kepercayaa	4,034	0,055	2,017	0,072	0,904	0,918	0,938	Baik
Sikap	3,991	0,051	1,996	0,081	0,981	0,970	0,990	Baik
Minat	9,626	0,058	1,295	0,074	0,969	0,976	0,988	Baik
Perilaku Konsumen	9,862	0,050	1,972	0,082	0,927	0,890	0,945	Baik

Sumber : Analisis data primer, 2019 (dari lampiran Confirmatory)

1. Variabel Persepsi Manfaat

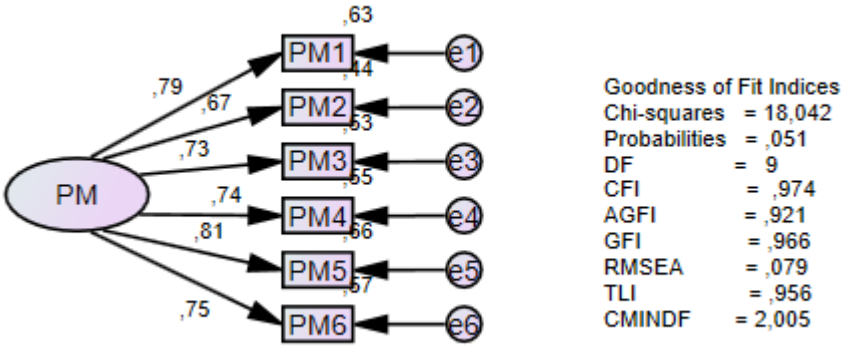

Regression Weights: (Group number 1 - Default model)

	Estimate	S.E.	C.R.	P	Label
PM1 <--- PM	1,000				
PM2 <--- PM	,916	,095	9,633	***	par_1
PM3 <--- PM	,995	,093	10,660	***	par_2
PM4 <--- PM	1,007	,092	10,944	***	par_3
PM5 <--- PM	1,031	,084	12,200	***	par_4

	Estimate	S.E.	C.R.	P	Label
PM6 <--- PM	1,038	,093	11,135	***	par_5

Standardized Regression Weights: (Group number 1 - Default model)

	Estimate
PM1 <--- PM	,793
PM2 <--- PM	,666
PM3 <--- PM	,726
PM4 <--- PM	,742
PM5 <--- PM	,813
PM6 <--- PM	,753

2. Variabel Persepsi Kemudahan

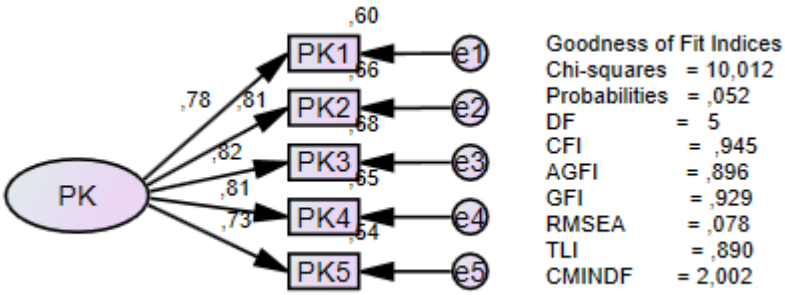

Regression Weights: (Group number 1 - Default model)

	Estimate	S.E.	C.R.	P	Label
PK1 <--- PK	1,000				
PK2 <--- PK	,873	,073	11,902	***	par_1
PK3 <--- PK	,982	,081	12,089	***	par_2
PK4 <--- PK	1,064	,090	11,836	***	par_3
PK5 <--- PK	,878	,083	10,596	***	par_4

Standardized Regression Weights: (Group number 1 - Default model)

	Estimate
PK1 <--- PK	,775
PK2 <--- PK	,810
PK3 <--- PK	,822
PK4 <--- PK	,806
PK5 <--- PK	,732

3. Variabel Tingkat Kepercayaan

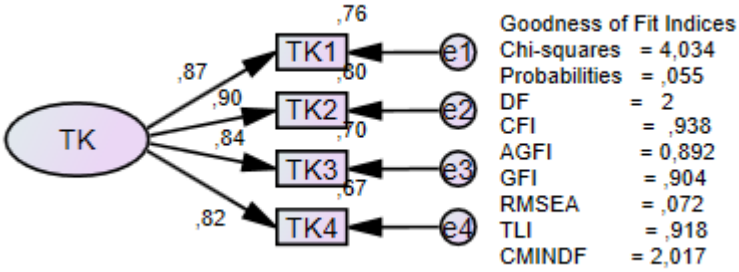

Regression Weights: (Group number 1 - Default model)

	Estimate	S.E.	C.R.	P	Label
TK1 <--- TK	1,000				
TK2 <--- TK	,938	,055	17,151	***	par_1
TK3 <--- TK	,827	,054	15,337	***	par_2
TK4 <--- TK	,784	,053	14,781	***	par_3

Standardized Regression Weights: (Group number 1 - Default model)

	Estimate
TK1 <--- TK	,872
TK2 <--- TK	,896
TK3 <--- TK	,839
TK4 <--- TK	,821

4. Variabel Sikap

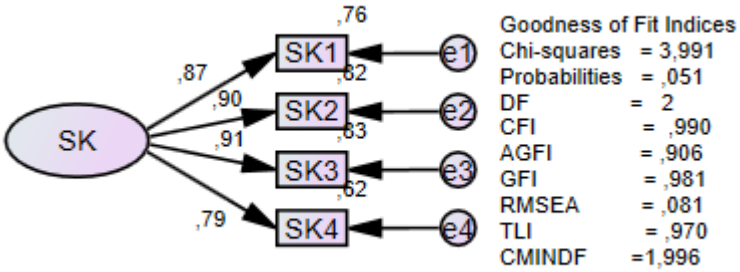

Regression Weights: (Group number 1 - Default model)

	Estimate	S.E.	C.R.	P	Label
SK1 <--- SK	1,000				
SK2 <--- SK	,984	,055	17,927	***	par_1
SK3 <--- SK	,967	,053	18,094	***	par_2
SK4 <--- SK	,883	,063	14,013	***	par_3

Standardized Regression Weights: (Group number 1 - Default model)

	Estimate
SK1 <--- SK	,871
SK2 <--- SK	,904
SK3 <--- SK	,909
SK4 <--- SK	,788

5. Variabel Minat

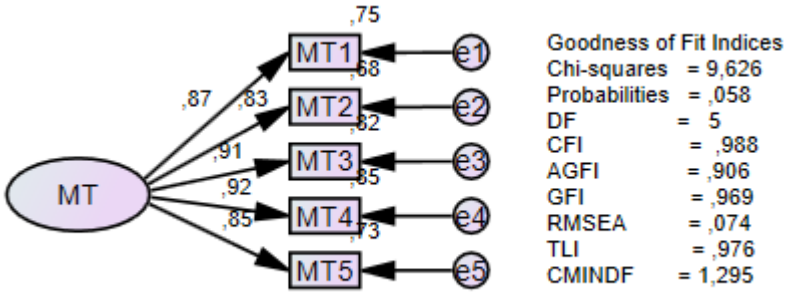

Regression Weights: (Group number 1 - Default model)

	Estimate	S.E.	C.R.	P	Label
MT1 <--- MT	1,000				
MT2 <--- MT	,957	,062	15,325	***	par_1
MT3 <--- MT	1,014	,055	18,332	***	par_2
MT4 <--- MT	1,008	,053	19,096	***	par_3
MT5 <--- MT	,989	,061	16,222	***	par_4

Standardized Regression Weights: (Group number 1 - Default model)

	Estimate
MT1 <--- MT	,867
MT2 <--- MT	,826
MT3 <--- MT	,906
MT4 <--- MT	,924
MT5 <--- MT	,852

6. Variabel Perilaku Konsumen

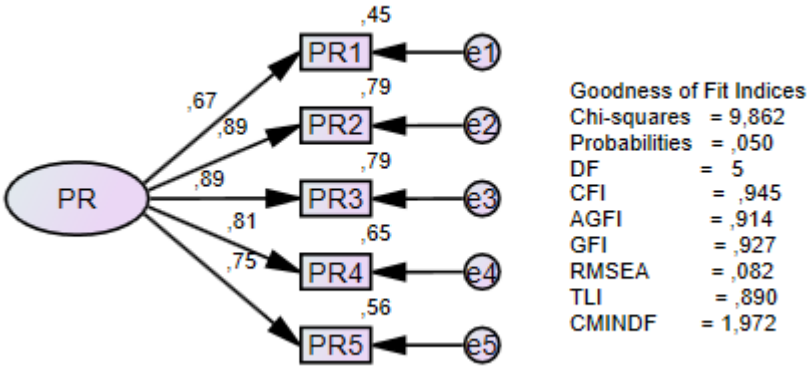

Regression Weights: (Group number 1 - Default model)

	Estimate	S.E.	C.R.	P	Label
PR1 <--- PR	1,000				
PR2 <--- PR	1,577	,143	11,024	***	par_1
PR3 <--- PR	1,631	,148	11,023	***	par_2
PR4 <--- PR	1,235	,121	10,205	***	par_3
PR5 <--- PR	1,557	,163	9,573	***	par_4

Standardized Regression Weights: (Group number 1 - Default model)

	Estimate
PR1 <--- PR	,674
PR2 <--- PR	,887
PR3 <--- PR	,887
PR4 <--- PR	,806
PR5 <--- PR	,749

LAMPIRAN 6 VALIDITAS DAN RELIABILITAS KONSTRUK

Tabel 2. Validitas dan Reliabilitas Konstruk

Variabel Laten	Indikator	Faktor loading	standar loading	measurement error	AVE	CR	Ket
Persepsi Manfaat					0,563	0,885	Reliabel
	PM1	0,793	0,629	0,371			valid
	PM2	0,666	0,444	0,556			valid
	PM3	0,726	0,527	0,473			valid
	PM4	0,742	0,551	0,449			valid
	PM5	0,813	0,661	0,339			valid
	PM6	0,753	0,567	0,433			valid
Persepsi Kemudahan					0,624	0,892	Reliabel
	PK1	0,775	0,601	0,399			valid
	PK2	0,810	0,656	0,344			valid
	PK3	0,822	0,676	0,324			valid
	PK4	0,806	0,650	0,350			valid
	PK5	0,732	0,536	0,464			valid
Tingkat Kepercayaan					0,735	0,917	Reliabel
	TK1	0,872	0,760	0,240			valid
	TK2	0,896	0,803	0,197			valid
	TK3	0,839	0,704	0,296			valid
	TK4	0,821	0,674	0,326			valid
Sikap					0,756	0,925	Reliabel
	NS1	0,871	0,759	0,241			valid
	NS2	0,904	0,817	0,183			valid
	NS3	0,909	0,826	0,174			valid
	NS4	0,788	0,621	0,379			valid
Minat					0,767	0,943	Reliabel

	MT1	0,867	0,752	0,248			valid
	MT2	0,826	0,682	0,318			valid
	MT3	0,906	0,821	0,179			valid
	MT4	0,924	0,854	0,146			valid
	MT5	0,852	0,726	0,274			valid
Perilaku Konsumen					0,648	0,901	Reliabel
	PR1	0,674	0,454	0,546			valid
	PR2	0,887	0,787	0,213			valid
	PR3	0,887	0,787	0,213			valid
	PR4	0,806	0,650	0,350			valid
	PR5	0,749	0,561	0,439			valid

Sumber: Analisis data primer, 2019 (dari lampiran Confirmatory kemudian dihitung dengan rumus AVE dan CR)

Lampiran 7. Uji Kualitas Data

a. Uji Normalitas

Variable	min	max	skew	c.r.	kurtosis	c.r.
TK4	1	5	-0,300	-1,741	0,875	2,539
TK3	1	5	-0,357	-2,071	0,459	1,332
TK2	1	5	0,365	-2,118	0,513	1,488
TK1	1	5	-0,350	-2,031	0,546	1,584
SK3	1	5	-0,327	-1,897	0,614	1,781
PM3	1	5	-0,376	-2,182	0,798	2,315
PR1	1	5	-0,409	-2,373	0,834	2,420
PR2	1	5	0,404	2,344	-0,073	-0,212
PR3	1	5	-0,275	-1,596	-0,459	-1,332
PR4	1	5	-0,414	-2,402	0,718	2,083
PR5	1	5	-0,315	-1,828	-0,257	-0,746
MT1	1	5	-0,425	-2,466	0,005	0,015
MT2	1	5	-0,394	-2,286	0,353	1,024
MT3	1	5	-0,418	-2,425	0,617	1,790
MT4	1	5	0,402	2,333	0,305	0,885
MT5	1	5	-0,413	-2,396	0,812	2,356
SK1	1	5	-0,376	-2,182	0,621	1,802
SK2	1	5	-0,360	-2,089	0,801	2,324
SK4	1	5	-0,415	-2,408	0,892	2,588
PK5	1	5	-0,427	-2,478	0,562	1,630
PK4	1	5	-0,315	-1,828	0,727	2,109
PK3	1	5	-0,411	-2,385	0,848	2,460
PK2	1	5	-0,366	-2,124	0,368	1,068
PK1	1	5	0,393	2,280	0,814	2,362
PM6	1	5	-0,426	-2,472	0,877	2,544
PM5	1	5	-0,394	-2,286	0,579	1,680
PM4	1	5	-0,376	-2,182	0,669	1,941
PM2	1	5	0,421	2,443	0,831	2,411
PM1	1	5	-0,441	-2,559	0,803	2,330
Multivariate					21,814	2,572

b. Outlier

Observation number	Mahalano bis d-squared	p1	p2
178	49,462	0,001	0,050
60	49,378	0,001	0,051
134	49,362	0,001	0,051
23	49,324	0,001	0,051
117	49,311	0,002	0,051
183	49,242	0,004	0,051
29	49,233	0,004	0,051
24	49,230	0,005	0,051
184	49,216	0,006	0,057
114	49,204	0,007	0,058
147	49,186	0,008	0,059
107	48,988	0,009	0,060
193	48,968	0,010	0,061
186	48,954	0,011	0,062
108	48,880	0,012	0,063
140	48,710	0,012	0,064
135	48,648	0,011	0,064
127	48,626	0,007	0,064
119	48,608	0,005	0,064
72	48,508	0,013	0,063
87	48,245	0,014	0,064
51	47,987	0,015	0,069
83	47,987	0,015	0,070
182	47,864	0,015	0,071
132	47,601	0,016	0,072
200	46,846	0,019	0,073
84	46,513	0,021	0,056
89	46,513	0,021	0,056
7	45,868	0,024	0,660
11	45,754	0,025	0,056
113	45,684	0,025	0,056
171	45,464	0,027	0,056
115	45,355	0,027	0,056
76	45,128	0,029	0,064
169	44,847	0,030	0,064
34	44,492	0,033	0,068
111	44,245	0,035	0,069
159	43,906	0,037	0,070
38	41,707	0,060	0,071
129	41,585	0,061	0,072
100	41,432	0,063	0,056

194	41,415	0,063	0,056
189	41,199	0,066	0,066
173	40,825	0,071	0,056
174	40,825	0,071	0,056
47	40,542	0,075	0,056
162	39,359	0,095	0,056
18	38,353	0,115	0,064
55	38,024	0,122	0,064
160	37,94	0,124	0,068
45	37,636	0,131	0,069
64	37,636	0,131	0,070
63	37,567	0,132	0,071
42	36,473	0,160	0,072
124	36,441	0,161	0,072
44	36,291	0,165	0,072
198	36,253	0,166	0,071
99	36,208	0,168	0,072
94	35,76	0,181	0,072
110	35,76	0,181	0,072
175	35,481	0,189	0,072
101	35,199	0,198	0,072
88	34,981	0,205	0,072
165	34,727	0,214	0,075
163	34,293	0,229	0,071
25	34,270	0,229	0,071
71	34,092	0,236	0,073
93	33,784	0,247	0,073
179	33,588	0,255	0,073
46	33,531	0,257	0,073
56	33,238	0,268	0,073
118	32,97	0,279	0,075
32	32,850	0,284	0,075
158	32,830	0,285	0,075
145	32,652	0,292	0,075
85	32,638	0,293	0,076
202	32,385	0,303	0,076
49	32,073	0,317	0,076
12	31,747	0,331	0,076
123	31,541	0,340	0,783
16	31,062	0,363	0,144
79	31,024	0,364	0,124
9	30,929	0,369	0,122
136	30,792	0,375	0,132
105	30,719	0,379	0,124
116	30,468	0,391	0,173
31	30,289	0,400	0,203

10	30,239	0,402	0,184
125	29,989	0,415	0,247
164	29,790	0,425	0,296
155	29,767	0,426	0,260
130	29,273	0,451	0,475
170	29,178	0,456	0,475
5	29,026	0,464	0,509
57	28,985	0,466	0,477
65	28,495	0,492	0,703
86	27,848	0,526	0,915
77	27,661	0,536	0,936
95	27,575	0,541	0,935
59	27,569	0,541	0,916

Lampiran 8. SEM Full Model Awal

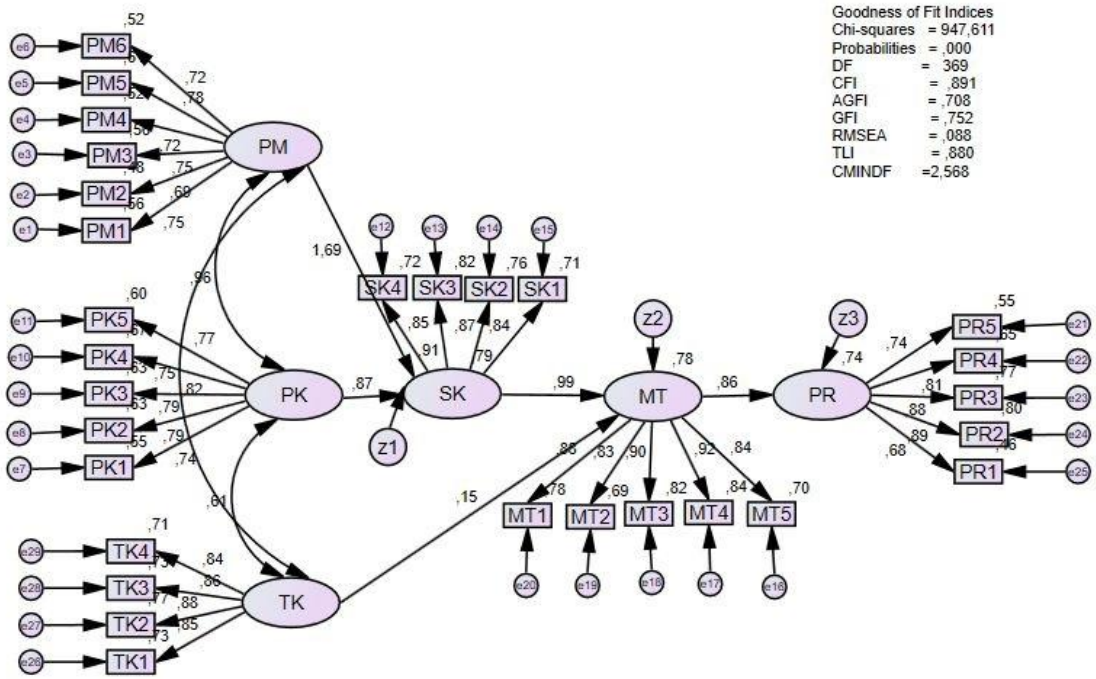

Gambar 1. Diagram Path Model Awal

Tabel 3. Indikator Pengujian *Goodness of Fit* Model Awal

Kriteria	**Hasil Model**	**Nilai Kritis**	**Kesimpulan**
X^2-Chi-square	946,611	Kecil	Belum baik
Probability	0,000	$\geq$ 0,05	Belum baik
RMSEA	0,088	$\leq$0,08	Marginal
GFI	0,752	$\geq$ 0,90	Belum baik
AGFI	0,708	$\geq$ 0,90	Belum baik
TLI	0,880	$\geq$ 0,90	Belum baik
CFI	0,891	$\geq$ 0,90	Marginal

Sumber: Analisis data primer, 2019

Nilai Modification Indices

			M.I.	Par Change
e26	<-->	e27	27,170	0,081
e22	<-->	e25	23,429	0,102
e14	<-->	e13	19,180	0,052
e1	<-->	e25	17,167	0,101
e28	<-->	e29	15,520	0,055
e14	<-->	e15	15,248	0,060
e1	<-->	e22	14,815	0,069
e16	<-->	e17	14,479	0,052
e7	<-->	e8	12,964	0,083
e10	<-->	e11	12,937	0,084
e2	<-->	e8	10,074	0,073
e15	<-->	e13	9,966	0,042
e5	<-->	e19	9,533	-0,061

Lampiran 9. SEM Full Model Akhir

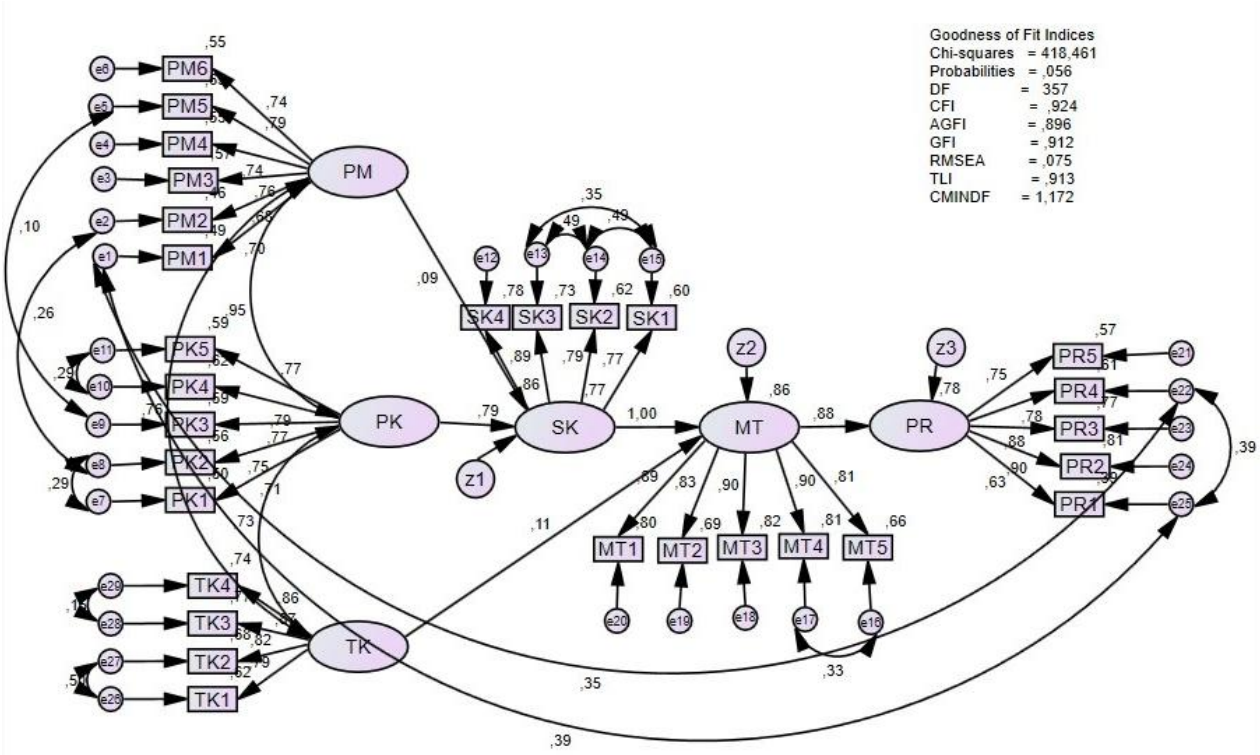

Gambar 2. Diagram Path Model Akhir

Tael 4. Indikator Pengujian *Goodness of Fit* Model Akhir

Kriteria	Hasil Model	Nilai Kritis	Kesimpulan
X^2-Chi-square	418,461	Kecil	fit
Probability	0,056	≥ 0,05	fit
RMSEA	0,075	≤0,08	fit
GFI	0,912	≥ 0,90	fit
AGFI	0,896	≥ 0,90	Marginal
TLI	0,913	≥ 0,90	fit
CFI	0,924	≥ 0,90	fit

Sumber: Analisis data primer, 2019

Regression Weights: (Group number 1 - Default model)

			Estimate	S.E.	C.R.	P	Label
SK	<---	PM	,132	,059	2,237	,043	par_25
SK	<---	PK	,936	,077	12,116	***	a

			Estimate	S.E.	C.R.	P	Label
MT	<---	SK	,936	,077	12,116	***	a
MT	<---	TK	,115	,052	2,211	,044	par_24
PR	<---	MT	,982	,090	10,889	***	par_23
PM1	<---	PM	1,000				
PM2	<---	PM	1,138	,122	9,333	***	par_2
PM5	<---	PM	1,221	,112	10,874	***	par_3
PM6	<---	PM	1,244	,122	10,196	***	par_4
PK1	<---	PK	1,000				
PK2	<---	PK	,891	,073	12,168	***	par_5
PK4	<---	PK	1,156	,108	10,718	***	par_6
PK5	<---	PK	1,023	,098	10,427	***	par_7
SK2	<---	SK	,848	,059	14,267	***	par_8
PR5	<---	PR	1,000				
PR4	<---	PR	,749	,064	11,624	***	par_9
PR3	<---	PR	1,031	,078	13,156	***	par_10
PR2	<---	PR	1,023	,076	13,542	***	par_11
PR1	<---	PR	,581	,063	9,182	***	par_12
PK3	<---	PK	1,022	,097	10,501	***	par_13
PM4	<---	PM	1,222	,120	10,175	***	par_14
PM3	<---	PM	1,263	,121	10,403	***	par_15
MT3	<---	MT	1,085	,068	16,032	***	par_16
TK1	<---	TK	1,000				
TK2	<---	TK	,956	,053	17,951	***	par_17
TK3	<---	TK	,955	,082	11,639	***	par_18
TK4	<---	TK	,911	,080	11,438	***	par_19
MT2	<---	MT	1,035	,073	14,150	***	par_26
MT1	<---	MT	1,105	,070	15,739	***	par_27
MT4	<---	MT	1,051	,054	19,340	***	par_28
SK4	<---	SK	1,000				
SK1	<---	SK	,878	,064	13,814	***	par_29
MT5	<---	MT	1,000				
SK3	<---	SK	,904	,054	16,810	***	par_30

Standardized Regression Weights: (Group number 1 - Default model)

			Estimate
SK	<---	PM	,094
SK	<---	PK	,790
MT	<---	SK	,997
MT	<---	TK	,112
PR	<---	MT	,881
PM1	<---	PM	,702
PM2	<---	PM	,679
PM5	<---	PM	,791

			Estimate
PM6	<---	PM	,741
PK1	<---	PK	,710
PK2	<---	PK	,751
PK4	<---	PK	,788
PK5	<---	PK	,767
SK2	<---	SK	,787
PR5	<---	PR	,755
PR4	<---	PR	,781
PR3	<---	PR	,878
PR2	<---	PR	,901
PR1	<---	PR	,628
PK3	<---	PK	,770
PM4	<---	PM	,740
PM3	<---	PM	,756
MT3	<---	MT	,903
TK1	<---	TK	,788
TK2	<---	TK	,825
TK3	<---	TK	,875
TK4	<---	TK	,861
MT2	<---	MT	,833
MT1	<---	MT	,893
MT4	<---	MT	,901
SK4	<---	SK	,885
SK1	<---	SK	,772
MT5	<---	MT	,814
SK3	<---	SK	,857

Covariances: (Group number 1 - Default model)

			Estimate	S.E.	C.R.	P	Label
PM	<-->	PK	,333	,048	6,894	***	par_20
PK	<-->	TK	,327	,052	6,295	***	par_21
PM	<-->	TK	,287	,045	6,440	***	par_22
e26	<-->	e27	,125	,032	3,948	***	par_31
e22	<-->	e25	,108	,023	4,671	***	par_32
e25	<-->	e1	,123	,025	4,854	***	par_33
e28	<-->	e29	,020	,025	,821	,412	par_34
e14	<-->	e15	,137	,026	5,285	***	par_35
e16	<-->	e17	,062	,017	3,644	***	par_36
e14	<-->	e13	,103	,021	4,950	***	par_37
e7	<-->	e8	,093	,026	3,597	***	par_38
e10	<-->	e11	,092	,028	3,240	,001	par_39

			Estimate	S.E.	C.R.	P	Label
e22	<-->	e1	,093	,021	4,343	***	par_40
e5	<-->	e9	,028	,023	1,198	,231	par_41
e2	<-->	e8	,087	,025	3,432	***	par_42
e15	<-->	e13	,079	,021	3,717	***	par_43

Correlations: (Group number 1 - Default model)

			Estimate
PM	<-->	PK	,953
PK	<-->	TK	,730
PM	<-->	TK	,759
e26	<-->	e27	,504
e22	<-->	e25	,394
e25	<-->	e1	,388
e28	<-->	e29	,147
e14	<-->	e15	,491
e16	<-->	e17	,335
e14	<-->	e13	,489
e7	<-->	e8	,289
e10	<-->	e11	,288
e22	<-->	e1	,354
e5	<-->	e9	,099
e2	<-->	e8	,259
e15	<-->	e13	,348

Variances: (Group number 1 - Default model)

	Estimate	S.E.	C.R.	P	Label
PM	,295	,052	5,735	***	par_44
PK	,414	,072	5,730	***	par_45
TK	,485	,078	6,247	***	par_46
z1	,131	,026	5,100	***	par_47
e31	,070	,018	3,900	***	par_48
e30	,142	,028	4,989	***	par_49
e2	,447	,048	9,322	***	par_50
e4	,364	,040	9,026	***	par_51
e5	,264	,031	8,606	***	par_52
e6	,375	,042	9,017	***	par_53
e7	,407	,045	9,121	***	par_54
e8	,255	,028	8,951	***	par_55
e9	,298	,034	8,734	***	par_56
e10	,337	,040	8,486	***	par_57
e11	,303	,035	8,664	***	par_58
e12	,161	,022	7,302	***	par_59
e14	,257	,030	8,680	***	par_60

	Estimate	S.E.	C.R.	P	Label
e15	,303	,034	8,790	***	par_61
e16	,260	,029	8,936	***	par_62
e17	,131	,017	7,883	***	par_63
e18	,136	,017	7,886	***	par_64
e19	,241	,027	8,938	***	par_65
e20	,159	,020	8,130	***	par_66
e21	,480	,053	9,048	***	par_67
e22	,228	,026	8,834	***	par_68
e23	,200	,027	7,471	***	par_69
e24	,154	,023	6,755	***	par_70
e25	,329	,035	9,499	***	par_71
e13	,172	,022	7,884	***	par_72
e1	,305	,033	9,221	***	par_73
e3	,352	,039	8,918	***	par_74
e26	,296	,041	7,185	***	par_75
e27	,208	,032	6,465	***	par_76
e28	,136	,029	4,601	***	par_77
e29	,140	,028	4,953	***	par_78

Squared Multiple Correlations: (Group number 1 - Default model)

	Estimate
SK	,775
MT	,863
PR	,777
TK4	,742
TK3	,765
TK2	,680
TK1	,621
SK3	,734
PM3	,572
PR1	,394
PR2	,812
PR3	,771
PR4	,609
PR5	,570
MT1	,797
MT2	,694
MT3	,816
MT4	,812
MT5	,663
SK1	,597
SK2	,619
SK4	,783

	Estimate
PK5	,589
PK4	,621
PK3	,592
PK2	,564
PK1	,505
PM6	,550
PM5	,625
PM4	,548
PM2	,461
PM1	,492

Total Effects (Group number 1 - Default model)

	TK	PK	PM	SK	MT	PR
SK	,000	,936	,132	,000	,000	,000
MT	-,115	,876	,123	,936	,000	,000
PR	-,113	,860	,121	,919	,982	,000
TK4	,911	,000	,000	,000	,000	,000
TK3	,955	,000	,000	,000	,000	,000
TK2	,956	,000	,000	,000	,000	,000
TK1	1,000	,000	,000	,000	,000	,000
SK3	,000	,846	,119	,904	,000	,000
PM3	,000	,000	1,263	,000	,000	,000
PR1	-,066	,500	,070	,534	,571	,581
PR2	-,116	,880	,124	,940	1,005	1,023
PR3	-,117	,887	,125	,948	1,013	1,031
PR4	-,085	,644	,091	,688	,735	,749
PR5	-,113	,860	,121	,919	,982	1,000
MT1	-,127	,968	,136	1,034	1,105	,000
MT2	-,119	,906	,127	,968	1,035	,000
MT3	-,125	,950	,134	1,015	1,085	,000
MT4	-,121	,921	,129	,984	1,051	,000
MT5	-,115	,876	,123	,936	1,000	,000
SK1	,000	,822	,116	,878	,000	,000
SK2	,000	,794	,112	,848	,000	,000
SK4	,000	,936	,132	1,000	,000	,000
PK5	,000	1,023	,000	,000	,000	,000
PK4	,000	1,156	,000	,000	,000	,000
PK3	,000	1,022	,000	,000	,000	,000
PK2	,000	,891	,000	,000	,000	,000
PK1	,000	1,000	,000	,000	,000	,000
PM6	,000	,000	1,244	,000	,000	,000
PM5	,000	,000	1,221	,000	,000	,000

	TK	PK	PM	SK	MT	PR
PM4	,000	,000	1,222	,000	,000	,000
PM2	,000	,000	1,138	,000	,000	,000
PM1	,000	,000	1,000	,000	,000	,000

Standardized Total Effects (Group number 1 - Default model)

	TK	PK	PM	SK	MT	PR
SK	,000	,790	,094	,000	,000	,000
MT	-,112	,788	,094	,997	,000	,000
PR	-,099	,695	,082	,879	,881	,000
TK4	,861	,000	,000	,000	,000	,000
TK3	,875	,000	,000	,000	,000	,000
TK2	,825	,000	,000	,000	,000	,000
TK1	,788	,000	,000	,000	,000	,000
SK3	,000	,677	,080	,857	,000	,000
PM3	,000	,000	,756	,000	,000	,000
PR1	-,062	,436	,052	,552	,553	,628
PR2	-,089	,626	,074	,792	,794	,901
PR3	-,087	,610	,072	,772	,774	,878
PR4	-,077	,542	,064	,686	,688	,781
PR5	-,075	,524	,062	,663	,665	,755
MT1	-,100	,704	,084	,890	,893	,000
MT2	-,093	,657	,078	,831	,833	,000
MT3	-,101	,712	,085	,901	,903	,000
MT4	-,101	,710	,084	,899	,901	,000
MT5	-,091	,642	,076	,812	,814	,000
SK1	,000	,611	,072	,772	,000	,000
SK2	,000	,622	,074	,787	,000	,000
SK4	,000	,700	,083	,885	,000	,000
PK5	,000	,767	,000	,000	,000	,000
PK4	,000	,788	,000	,000	,000	,000
PK3	,000	,770	,000	,000	,000	,000
PK2	,000	,751	,000	,000	,000	,000
PK1	,000	,710	,000	,000	,000	,000
PM6	,000	,000	,741	,000	,000	,000
PM5	,000	,000	,791	,000	,000	,000
PM4	,000	,000	,740	,000	,000	,000
PM2	,000	,000	,679	,000	,000	,000
PM1	,000	,000	,702	,000	,000	,000

Direct Effects (Group number 1 - Default model)

	TK	PK	PM	SK	MT	PR
SK	,000	,936	,132	,000	,000	,000
MT	-,115	,000	,000	,936	,000	,000

	TK	PK	PM	SK	MT	PR
PR	,000	,000	,000	,000	,982	,000
TK4	,911	,000	,000	,000	,000	,000
TK3	,955	,000	,000	,000	,000	,000
TK2	,956	,000	,000	,000	,000	,000
TK1	1,000	,000	,000	,000	,000	,000
SK3	,000	,000	,000	,904	,000	,000
PM3	,000	,000	1,263	,000	,000	,000
PR1	,000	,000	,000	,000	,000	,581
PR2	,000	,000	,000	,000	,000	1,023
PR3	,000	,000	,000	,000	,000	1,031
PR4	,000	,000	,000	,000	,000	,749
PR5	,000	,000	,000	,000	,000	1,000
MT1	,000	,000	,000	,000	1,105	,000
MT2	,000	,000	,000	,000	1,035	,000
MT3	,000	,000	,000	,000	1,085	,000
MT4	,000	,000	,000	,000	1,051	,000
MT5	,000	,000	,000	,000	1,000	,000
SK1	,000	,000	,000	,878	,000	,000
SK2	,000	,000	,000	,848	,000	,000
SK4	,000	,000	,000	1,000	,000	,000
PK5	,000	1,023	,000	,000	,000	,000
PK4	,000	1,156	,000	,000	,000	,000
PK3	,000	1,022	,000	,000	,000	,000
PK2	,000	,891	,000	,000	,000	,000
PK1	,000	1,000	,000	,000	,000	,000
PM6	,000	,000	1,244	,000	,000	,000
PM5	,000	,000	1,221	,000	,000	,000
PM4	,000	,000	1,222	,000	,000	,000
PM2	,000	,000	1,138	,000	,000	,000
PM1	,000	,000	1,000	,000	,000	,000

Standardized Direct Effects (Group number 1 - Default model)

	TK	PK	PM	SK	MT	PR
SK	,000	,790	,094	,000	,000	,000
MT	-,112	,000	,000	,997	,000	,000
PR	,000	,000	,000	,000	,881	,000
TK4	,861	,000	,000	,000	,000	,000
TK3	,875	,000	,000	,000	,000	,000
TK2	,825	,000	,000	,000	,000	,000
TK1	,788	,000	,000	,000	,000	,000
SK3	,000	,000	,000	,857	,000	,000
PM3	,000	,000	,756	,000	,000	,000
PR1	,000	,000	,000	,000	,000	,628

	TK	PK	PM	SK	MT	PR
PR2	,000	,000	,000	,000	,000	,901
PR3	,000	,000	,000	,000	,000	,878
PR4	,000	,000	,000	,000	,000	,781
PR5	,000	,000	,000	,000	,000	,755
MT1	,000	,000	,000	,000	,893	,000
MT2	,000	,000	,000	,000	,833	,000
MT3	,000	,000	,000	,000	,903	,000
MT4	,000	,000	,000	,000	,901	,000
MT5	,000	,000	,000	,000	,814	,000
SK1	,000	,000	,000	,772	,000	,000
SK2	,000	,000	,000	,787	,000	,000
SK4	,000	,000	,000	,885	,000	,000
PK5	,000	,767	,000	,000	,000	,000
PK4	,000	,788	,000	,000	,000	,000
PK3	,000	,770	,000	,000	,000	,000
PK2	,000	,751	,000	,000	,000	,000
PK1	,000	,710	,000	,000	,000	,000
PM6	,000	,000	,741	,000	,000	,000
PM5	,000	,000	,791	,000	,000	,000
PM4	,000	,000	,740	,000	,000	,000
PM2	,000	,000	,679	,000	,000	,000
PM1	,000	,000	,702	,000	,000	,000

Indirect Effects (Group number 1 - Default model)

	TK	PK	PM	SK	MT	PR
SK	,000	,000	,000	,000	,000	,000
MT	,000	,876	,123	,000	,000	,000
PR	-,113	,860	,121	,919	,000	,000
TK4	,000	,000	,000	,000	,000	,000
TK3	,000	,000	,000	,000	,000	,000
TK2	,000	,000	,000	,000	,000	,000
TK1	,000	,000	,000	,000	,000	,000
SK3	,000	,846	,119	,000	,000	,000
PM3	,000	,000	,000	,000	,000	,000
PR1	-,066	,500	,070	,534	,571	,000
PR2	-,116	,880	,124	,940	1,005	,000
PR3	-,117	,887	,125	,948	1,013	,000
PR4	-,085	,644	,091	,688	,735	,000
PR5	-,113	,860	,121	,919	,982	,000
MT1	-,127	,968	,136	1,034	,000	,000
MT2	-,119	,906	,127	,968	,000	,000
MT3	-,125	,950	,134	1,015	,000	,000
MT4	-,121	,921	,129	,984	,000	,000
MT5	-,115	,876	,123	,936	,000	,000
SK1	,000	,822	,116	,000	,000	,000
SK2	,000	,794	,112	,000	,000	,000
SK4	,000	,936	,132	,000	,000	,000
PK5	,000	,000	,000	,000	,000	,000
PK4	,000	,000	,000	,000	,000	,000
PK3	,000	,000	,000	,000	,000	,000
PK2	,000	,000	,000	,000	,000	,000
PK1	,000	,000	,000	,000	,000	,000
PM6	,000	,000	,000	,000	,000	,000
PM5	,000	,000	,000	,000	,000	,000
PM4	,000	,000	,000	,000	,000	,000
PM2	,000	,000	,000	,000	,000	,000
PM1	,000	,000	,000	,000	,000	,000

Standardized Indirect Effects (Group number 1 - Default model)

	TK	PK	PM	SK	MT	PR
SK	,000	,000	,000	,000	,000	,000
MT	,000	,788	,094	,000	,000	,000
PR	-,099	,695	,082	,879	,000	,000
TK4	,000	,000	,000	,000	,000	,000
TK3	,000	,000	,000	,000	,000	,000
TK2	,000	,000	,000	,000	,000	,000

	TK	PK	PM	SK	MT	PR
TK1	,000	,000	,000	,000	,000	,000
SK3	,000	,677	,080	,000	,000	,000
PM3	,000	,000	,000	,000	,000	,000
PR1	-,062	,436	,052	,552	,553	,000
PR2	-,089	,626	,074	,792	,794	,000
PR3	-,087	,610	,072	,772	,774	,000
PR4	-,077	,542	,064	,686	,688	,000
PR5	-,075	,524	,062	,663	,665	,000
MT1	-,100	,704	,084	,890	,000	,000
MT2	-,093	,657	,078	,831	,000	,000
MT3	-,101	,712	,085	,901	,000	,000
MT4	-,101	,710	,084	,899	,000	,000
MT5	-,091	,642	,076	,812	,000	,000
SK1	,000	,611	,072	,000	,000	,000
SK2	,000	,622	,074	,000	,000	,000
SK4	,000	,700	,083	,000	,000	,000
PK5	,000	,000	,000	,000	,000	,000
PK4	,000	,000	,000	,000	,000	,000
PK3	,000	,000	,000	,000	,000	,000
PK2	,000	,000	,000	,000	,000	,000
PK1	,000	,000	,000	,000	,000	,000
PM6	,000	,000	,000	,000	,000	,000
PM5	,000	,000	,000	,000	,000	,000
PM4	,000	,000	,000	,000	,000	,000
PM2	,000	,000	,000	,000	,000	,000
PM1	,000	,000	,000	,000	,000	,000