PERPUSTAKAAN FTSP UII
HADIAH/BELI
TGL. TERIMA : 13 Juni 2006
NO. JUDUL : 001906
NO. INV. : 5120000190600 1
NO. INDUK. :

TUGAS AKHIR
PERENCANAAN ULANG STRUKTUR (REDESAIN)
PASAR RAKYAT TELUK KUANTAN TAHAP – 2
PROPINSI RIAU

Diajukan kepada Universitas Islam Indonesia
untuk memenuhi sebagian persyaratan memperoleh
derajat Sarjana Teknik Sipil

DIBACA DI TEMPAT
TIDAK BOLEH DIBAWA PULANG

Disusun Oleh :

Nama : Fajar Wiriadi
No.Mhs : 98 511 133

JURUSAN TEKNIK SIPIL
FAKULTAS TEKNIK SIPIL DAN PERENCANAAN
UNIVERSITAS ISLAM INDONESIA
YOGYAKARTA
2005

LEMBAR PENGESAHAN
TUGAS AKHIR

PERENCANAAN ULANG STRUKTUR (REDESAIN) GEDUNG PASAR RAKYAT TELUK KUANTAN TAHAP – 2 PROPINSI RIAU

Diajukan kepada Universitas Islam Indonesia
untuk memenuhi sebagian persyaratan memperoleh
derajat Sarjana Teknik Sipil

Disusun Oleh :

Nama : FAJAR WIRIADI
No.Mhs : 98 511 133

Telah diperiksa dan disetujui oleh :

Ir. H. ILMAN NOOR, MSCE
Dosen Pembimbing I

Tanggal : 28/10 – 2005

4. PT. Chandra Mandiri Perkasa yang telah mengijinkan penyusun mengambil data Proyek Pasar Rakyat Teluk Kuantan.
5. Teman – teman yang banyak membantu penyusunan Tugas Akhir ini.

Semua pihak yang tidak dapat penyusun sebutkan satu per satu, yang telah memberikan bantuannya hingga laporan Kerja Praktik ini dapat selesai dengan baik.

Semoga Allah SWT memberikan balasan yang setimpal dan semoga bantuan tersebut menjadi amal kebaikan dan ibadah sebagai umat yang beriman kepada Yang Maha Kuasa.

Wassalamu'alaikum Wr, Wb

Yogyakarta, Juli 2005

Penyusun

DAFTAR ISI

HALAMAN JUDUL	i
LEMBAR PENGESAHAN	ii
LEMBAR PERSEMBAHAN	iii
KATA PENGANTAR	v
DAFTAR ISI	vi
DAFTAR TABEL	xii
DAFTAR GAMBAR	xiv
DAFTAR NOTASI	xvii
INTISARI	xxxi
BAB I PENDAHULUAN	
1.1 Latar Belakang	1
1.2 Maksud dan Tujuan	1
1.3 Batasan Perencanaan	2
1.4 Lokasi Proyek	3
1.5 Metode Perencanaan	4
BAB II TINJAUAN PUSTAKA	
2.1 Pendahuluan	5
2.2 Struktur Bawah *(Sub Structure)*	5
2.2.1 Pondasi	5
2.3 Struktur Atas Bangunan *(Upper Structure)*	6
2.3.1 Atap	6
2.3.2 Pelat	6
2.3.2.1 Pelat satu arah	7
2.3.2.2 Pelat Dua Arah	7

2.3.3 Kolom *(column)* 7

2.3.4 Balok 8

2.3.5 Portal 8

2.3.5.1 Portal Tak Bergoyang 8

2.3.5.2 Portal Bergoyang 9

2.3.6 Tangga 9

2.4 Pembebanan 9

2.4.1 Macam-macam Pembebanan 9

2.4.2 Kombinasi Pembebanan 10

2.4.3 Faktor Reduksi Kekuatan 12

2.5 Dasar Perencanaan 12

BAB III LANDASAN TEORI

3.1 Perencanaan Atap 14

3.1.1 Perencanaan Gording 14

3.1.2 Perencanaan Sagrod 15

3.1.3 Perencanaan Tierod 16

3.1.4 Perencanaan Batang Tarik 16

3.1.5 Perencanaan Batang Desak 18

3.1.6 Perencanaan Balok - Kolom 19

3.1.6 Perencanaan Sambungan 20

3.2 Perencanaan Pelat dua (2) Arah 20

3.2.1 Menentukan Tebal minimum Pelat 20

3.2.2 Menetukan Momen Lentur yang Terjadi 22

3.2.3 Menentukan Tinggi Manfaat arah x dan y 22

3.2.4 Menentukan Luas Tulangan arah x dan y 23

3.2.5 Kontrol Kapasitas Lentur Pelat yang Terjadi 24

3.3 Perencanaan Balok 24

3.3.1 Perencanaan Balok Penampang Persegi Menahan Lentur Tulangan Sebelah 26

3.3.2 Perencanaan Balok Penampang Persegi Menahan Lentur Tulangan Rangkap 27

3.3.3 Perencanaan Geser Balok 29

3.3.4 Perencanaan Geser dan Torsi Balok 31

3.4 Perencanaan Kolom 34

3.4.1 Perencanaan Kolom Pendek 34

3.4.2 Perencanaan Kolom Panjang 37

3.5 Perencanaan Beban Gempa 41

3.5.1 Perencanaan Struktur Portal Dengan Daktilitas Penuh 41

3.5.2 Waktu Getar Struktur 42

3.5.3 Koefisien Gempa Dasar 42

3.5.4 Faktor Keutamaan Gedung 42

3.5.5 faktor Jenis Bangunan 42

3.6 Perencanaan Balok dan Kolom Portal 42

3.6.1 Perencanaan Balok Portal Terhadap Beban Lentur 42

3.6.2 Perencanaan Balok Portal Terhadap Beban Geser 43

3.6.3 Perencanaan Kolom Portal Terhadap Beban Lentur dan Aksial 44

3.6.4 Perencanaan Kolom Portal Terhadap Beban Geser 45

3.6.5 Perencanaan Panel Pertemuan Balok Kolom 46

3.7 Pondasi 49

3.7.1 Perencanaan Pondasi 49

3.7.2 Daya Dukung Ujung Tiang Pancang Tunggal 50

3.7.3 Kapasitas Dukung Tiang Kelompok 52

3.7.4 Perencanaan Pile Cap 55

3.8 Perencanaan Tangga 59

3.8.1 Perencanaan Dimensi Tangga 59

3.8.2 Perencanaan Tulangan Tangga 61

BAB IV PERHITUNGAN KONSTRUKSI

4.1 Perencanaan Atap 62

4.1.1 Perencanaan Gording 62

4.1.2 Perencanaan Kuda – Kuda 67

4.1.3 Perencanaan Dukungan Arah Lateral 70

4.1.4 Perencanaan Dimensi Batang 71

4.1.5 Perencanaan Pelat Kuda - Kuda 76

4.1.6 Perencanaan Sambungan 76

4.2 Perencanaan Pelat Lantai dan Pelat Talang Beton 80

4.2.1 Perencanaan Pelat Lantai 80

4.2.1.1 Pembebanan Pelat Lantai 80

4.2.1.2 Perhitungan Tulangan Pelat Lantai 81

4.2.2 Perencanaan Pelat Talang Beton 86

4.3 Perencanaan Struktur Portal Dengan Daktilitas Penuh 88

4.3.1 Berat Total Bangunan 89

4.3.2 Waktu Getar Bangunan 91

4.3.3 Koefisien Getar Bangunan 91

4.3.4 Faktor Keutamaan I dan Faktor Jenis Struktur K 91
4.3.5 Gaya Geser Horizontal Akibat Gempa 91
4.3.6 Distribusi Gaya Horizontal Akibat Gempa 91
Ke Sepanjang Tinggi Gedung 92
4.4 Disain Balok 94
4.4.1 Disain Balok Anak 94
4.4.1.1 Disain Tulangan Lentur 94
4.4.1.2 Perencanaan Tulangan Geser Balok 98
4.4.2 Desain Balok Induk 101
4.4.2.1 Portal Arah - X 101
4.4.2.2 Portal Arah - Y 111
4.5 Perencanaan Kolom 122
4.5.1 Perhitungan Momen dan Gaya Aksial Rencana 122
4.5.2 Kriteria Kolom dan Pembesaran Kolom 124
4.5.3 Analisis Gaya Aksial dan Momen Akibat Balok 127
4.5.4 Perencanaan Tulangan Lentur Kolom 130
4.5.5 Perencanaan Tulangan Geser Kolom 135
4.5.6 Pertemuan Balok Kolom 137
4.5.7 Perencanaan Tulangan Lentur Kolom
Dengan Biaksial Momen 141
4.6 Perencanaan Pondasi 146
4.6.1 Daya Dukung Tiang Pancang Tunggal 146
4.6.2 Daya Dukung Tiang Pancang Kelompok 147
4.6.2 Perencanaan Pile Cap 149
4.7 Perencanaan Tangga 154

4.7.1 Perencanaan Tangga Entrance 154

4.7.1.1 Spesifikasi Struktur 154

4.7.2 Pembebanan 155

4.7.3 Penulangan Tangga 156

4.7.4 Perencanaan Balok Bordes 160

4.7.5 Perencanaan Pondasi Tangga 166

BAB V PEMBAHASAN

5.1 Umum 168

5.2 Atap 168

5.3 Pelat 169

5.4 Balok 171

5.5 Kolom 172

5.6 Pondasi 174

5.7 Tangga 174

BAB VI KESIMPULAN DAN SARAN

7.1 Kesimpulan 176

7.2 Saran 177

DAFTAR PUSTAKA

LAMPIRAN

DAFTAR TABEL

Tabel 2.1	Faktor reduksi kekuatan	12
Tabel 3.1	Jarak minimum anatara tiang pancang	53
Tabel 3.2	Faktor adhesi	55
Tabel 4.1	Perhitungan berat bangunan	89
Tabel 4.2	Distribusi gaya geser horizontal total akibat gempa	92
Tabel 5.1	Hasil perhitungan kuda – kuda	169
Tabel 5.2	Perbandingan perhitungan tulangan balok	171
Tabel 5.3	Hasil perhitungan tulangan kolom	173
Tabel 5.4	Perbandingan pondasi perhitungan penulis Dengan data gambar rencana	174

DAFTAR GAMBAR

Gambar 1.1	Denah Lokasi Proyek	3
Gambar 3.1	Tinggi manfaat pelat beton	23
Gambar 3.2	Diagram regangan beton	25
Gambar 3.3	Tinggi efektif tulangan tarik satu lapis dan dua lapis	26
Gambar 3.4	Diagram interaksi Mn - Pn	37
Gambar 3.5	Kolom dengan Mu,k berdasarkan kapasitas sendi plastis balok	45
Gambar 3.6	Panel pertemuan balok & kolom dalam kondisi terjadinya sendi – sendi plastis pada kedua ujung balok	47
Gambar 3.7	Susunan kelompok tiang pancang	53
Gambar 3.8	Konfigurasi kelompok tiang pancang	55
Gambar 3.9	Reaksi tiang pancang akibat beban aksial momen	56
Gambar 3.10	Penampang kritis pile cap akibat geser	57
Gambar 3.11	Penampang kritis pile cap akibat momen	58
Gambar 3.12	Dimensi tangga	61
Gambar 4.1	Rencana rangka KK-1	62
Gambar 4.2	Tampak atas rencana atap	70
Gambar 4.3	Bidang momen pada puncak kuda – kuda	77
Gambar 4.4	Sambungan pada puncak kuda – kuda	77
Gambar 4.5	Pot I – I Sambungan pada puncak kuda – kuda	78
Gambar 4.6	Beberapa kondisi tepi pelat lantai	80
Gambar 4.7	Talang beton	86
Gambar 4.8	Beban gempa arah – X pada portal A	92
Gambar 4.9	Beban gempa arah – X pada portal B	93

Gambar 4.10	Beban gempa arah – Y pada portal 12	93
Gambar 4.11	Tulangan tumpuan balok anak frame 192	96
Gambar 4.12	Tulangan lapangan frame 192	98
Gambar 4.13	Diagram tegangan geser balok anak	99
Gambar 4.14	Tulangan tumpuan balok induk	105
Gambar 4.15	Tulangan lapangan balok induk	106
Gambar 4.16	Diagram tegangan geser balok	109
Gambar 4.17	Tulangan tumpuan balok induk	114
Gambar 4.18	Tulangan lapangan balok induk	116
Gambar 4.19	Diagram tegangan geser balok	119
Gambar 4.20	Grafik Mn – Pn kolom	131
Gambar 4.21	Grafik Mn – Pn kolom	133
Gambar 4.22	Join balok kolom dalam	137
Gambar 4.23	Tiang pancang tunggal	146
Gambar 4.24	Pile cap	148
Gambar 4.25	Rencana pile cap	149
Gambar 4.26	Susunan kelompok tiang pancang pada pile cap	149
Gambar 4.27	Bidang momen tangga entrance	156
Gambar 4.28	Diagram geser balok bordes	165
Gambar 4.29	Pondasi tangga	166

DAFTAR NOTASI

1. Perencanaan atap

a : Jumlah sagrod dalam satu bentang

A : Luas profil baja

Ag : Luasan Bruto Profil

Anetto : Luasan bersih profil

Aeffektif : Luasan netto effektif

B : Lebar pelat kuda-kuda

bf : Lebar sayap

b : Lebar sayap

C_1 : Gaya angin tekan

C_2 : Gaya angin hisap

Cc : Perbandingan kelangsingan yang menjadi batas antara tekuk elastis dan tekuk inelastic

D : Diameter

E : Modulus elastisitas baja

Fa : Tegangan ijin pada luas bruto dalam kondisi beban bekerja

fa : Tegangan tarik yang terjadi

fbx : Tegangan lentur arah x

fby : Tegangan lentur arah y

fc' : Kuat tekan beton

FS : Faktor keamanan

Fu	: Kuat tarik baja
fy	: Tegangan leleh baja
Ix	: Inersia arah X
Iy	: Inersia arah Y
K	: Koefisien kelangsingan
l	: Panjang batang yang ditinjau
L	: Panjang pelat kuda-kuda
Lb	: Jarak antar gording
M⊥	: Momen tegak lurus sumbu batang
M//	: Momen sejajar sumbu batang
n	: Jumlah baut
P	: Gaya tekan yang bekerja
P//	: Gaya tekan sejajar sumbu batang
q⊥	: Beban merata tegak lurus sumbu batang
q//	: Beban merata sejajar sumbu batang
r	: Jari-jari inersia = i
Ss	: Jarak beban sagrod
Sx	: Modulus elastis tampang arah sumbu x
Sy	: Modulus elastis tampang arah sumbu y
T	: Gaya tarik yang bekerja
tw	: Tebal badan profil
tp	: Tebal pelat

W : Berat profil

A : Sudut kemiringan atap

$\delta\perp$: Lendutan tegak lurus sumbu batang

$\delta//$: Lendutan sejajar sumbu batang

δ : Resultante lendutan

μ : Faktor reduksi luas netto

2. Perencanaan Pelat Lantai

As : Luas tulangan

a : Tinggi blok tegangan persegi ekivalen

b : Panjang memanjang pelat

clx : Koefisien momen lapangan arah x

ctx : Koefisien momen tumpuan arah x

cly : Koefisien momen lapangan arah y

cty : Koefisien momen tumpuan arah y

d : Tinggi efektif pelat

fc' : Kuat desak beton

fy : Kuat tarik baja

h : Tinggi pelat

ly : Panjang plat arah panjang

lx : Panjang plat arah pendek

m : Perbandingan isi dari tulangan memanjang dari bentuk tertutup

Mulx : Momen ultimit arah lapangan x

Mutx	: Momen ultimit arah tumpuan x
Muly	: Momen ultimit arah lapangan y
Muty	: Momen ultimit arah tumpuan y
Mu	: Momen ultimit
Mn	: Momen nominal
qD	: Beban mati merata
qL	: Beban hidup merata
qU	: Beban merata rencana
Rn	: Koefisien tahanan untuk perencanaan kuat
ρ	: Rasio tulangan tarik
ρb	: Rasio tulangan pada keadaan seimbang
Ø	: Koefisien reduksi kekuatan

3. Perencanaan Balok

As	: Luas tulangan tarik
As'	: Luas tulangan desak
b	: Lebar balok
d	: Tinggi efektif tulangan larik
d'	: Tinggi efektif tulangan tekan
E	: Modulus elastisitas beton
fc'	: Kuat tekan beton
fy	: Kuat tarik baja
h	: Tinggi balok

b : Lebar penampang kolom

Cc : Gaya tekan pada beton

Cs : Gaya pada tulangan tekan

Cm : Faktor untuk perbesaran momen

d : Jarak dari sisi tekan terluar ke pusat tulangan tarik

d' : Jarak dari sisi tekan terluar ke pusat tulangan tekan

e : Eksentrisitas actual

eb : eksentrisitas pada keadaan seimbang

Ec : Modulus elastisitas beton

Eg : Modulus elastisitas balok

Es : Modulus elastisitas baja tulangan

fc' : Kuat desak beton

fs : Tegangan tulangan tarik

fs' : Tegangan tulangan tekan

fy : tegangan leleh baja yang diisyaratkan

h : Tinggi penampang kolom

hn : Panjang bersih kolom

Ic : Momen inersia kolom

Icr : Momen inersia balok

Ig : Momen inersia dari penampang bruto balok

k : Faktor panjang efektif

L : Panjang balok

ln : Panjang bersih balok

m : Perbandingan isi dari tulangan memanjang dari bentuk tertutup

M_b : Momen akibat beban tetap

M_{1b} : Momen factor terbesar pada ujung komponen akibat beban tetap

M_{2b} : Momen factor terbesar pada ujung komponen akibat beban sementara

M_D : Momen akibat beban mati

M_E : Momen akibat beban gempa

M_L : Momen akibat beban hidup

Mn : Momen nominal

M_{nx} : Momen nominal yang bekerja pada sb x

M_{ny} : Momen nominal yang bekerja di sb y

M_S : Momen akibat beban sementara

Mu : Momen ultimit kolom

Mu,kx : Momen ultimit kolom arah x

Mu,ky : Momen ultimit kolom arah y

P_c : Beban tekuk euler

P_D : Gaya tekan akibat beban mati

P_E : Gaya tekan akibat beban gempa

P_L : gaya tekan akibat beban hidup

Pn : Gaya tekan nominal

Pu,k : Gaya tekan ultimit kolom

r : Jari-jari girasi penampang

Ts : Gaya pada tulangan tarik

δb :Faktor pembesaran momen untuk rangka yang ditahan terhadap goyangan kesamping

δs : Faktor pembesaran momen untuk rangka yang tidak ditahan terhadap goyangan kesamping

ρ : Rasio tulangan kolom

β_1 : Faktor tinggi blok tekanan ekivalen

β_d : Nilai perbandingan momen beban mati rencana terhadap momen total rencana yang besarnya kurang atau sama dengan satu.

ψ : Faktor kekangan ujung

Ø : Faktor reduksi kekuatan

$\sum Pc$: Penjumlahan beban tekuk euler pada kolom satu tingkat/lantai

$\sum Pu$: Penjumlahan beban tekuk ultimit pada kolom satu tingkat/lantai

5. Perencanaan Gempa

Ag : Luas bruto penampang

Ajh : Luas tulangan total efektif tulangan geser horizontal

Ajv : Luas tulangan geser join vertikal

Asc : Luas tulangan longitudinal tarik

Asc' : Luas tulangan longitudinal tekan

bj : Lebar efektif join

C : Koefisien gempa dasar

Cki : Gaya tekan tulangan arah kiri

Fx : Beban horizontal tiap lantai pada arah x

fy : Tegangan leleh baja

fc' : Kuat tekan beton

Fy : Beban horizontal tiap lantai pada arah y

hx : Tinggi gedung arah x

hy : Tinggi gedung arah y

hk : Tinggi kolom bruto

h'k : Tinggi kolom netto

hc : Tinggi total penampang kolom dalam arah geser yang ditinjau

hw : Tinggi bangunan

I : Faktor keutamaan struktur

K : Faktor jenis struktur

Lb : Panjang balok

Lki : Panjang balok bruto sebelah kiri kolom yang ditinjau

Lki' : Panjang balok netto sebelah kiri kolom yang ditinjau

Lka : Panjang balok bruto sebelah kanan balok yang ditinjau

Lka' : Panjang balok netto sebelah kanan balok yang ditinjau

Ln : Bentang bersih balok

Lw : Lebar bangunan

$M_{D,b}$: Momen lentur balok portal akibat beban mati tak berfaktor

$M_{D,k}$: Momen lentur kolom portal akibat beban mati tak berfaktor

$M_{E,b}$: Momen lentur balok portal akibat beban gempa tak berfaktor

$M_{E,k}$: Momen lentur kolom portal akibat beban gempa tak berfaktor

$M_{L,b}$: Momen lentur balok portal akibat beban hidup tak berfaktor

$M_{L,k}$: Momen lentur kolom portal akibat beban hidup tak berfaktor

Mkap,b : Momen kapasitas balok

Mnak,b : Kuat momen lentur nominal actual balok

Mkap : Momen kapasitas di sendi plastis pada satu ujung atau bidang muka kolom

Mkap' : Momen kapasitas untuk ujung lainnya

Mu,b : Momen ultimit balok

Mu,k : Momen ultimit kolom

n : Jumlah lantai tingkat di atas kolom yang ditinjau

$N_{E,k}$: Gaya akibat beban gempa pada pusat kolom

Ng,k : Gaya aksial akibat beban gravitasi terfaktor pada pusat join

Nu,k : Gaya aksial ultimit kolom

Pcs : Gaya permanen gaya prategang yang terletak di sepertiga bagian tengah tinggi kolom

q : Beban terbagi merata

Rv : Faktor reduksi berdasarkan banyak tingkat

T : Gaya tarik yang terjadi

Vb : Gaya gempa dasar

Vbx : Gaya gempa dasar arah x

Vby : Gaya gempa dasar arah y

Vch : Gaya geser strat beton diagonal yang melewati daerah tekan ujung joint arah horizontal

Vcv	: Gaya geser strat beton diagonal yang melewati daerah tekan ujung joint arah vertikal
V_D	: Gaya geser balok akibat beban mati
$V_{D,K}$	: Gaya geser kolom akibat beban mati
V_E	: Gaya geser balok akibat beban gempa
$V_{E,K}$	: Gaya geser kolom akibat beban gempa
Vg	: Gaya geser balok akibat berat sendiri dan beban gravitasi
Vjh	: Gaya geser horizontal
V_L	: Gaya geser balok akibat beban hidup
$V_{L,K}$	: Gaya geser kolom akibat beban hidup
Vkol	: Gaya geser kolom
Vsh	: Gaya geser pada daerah tarik joint dengan mekanisme panel rangka arah horizontal
Vsv	: Gaya geser pada daerah tarik joint dengan mekanisme panel rangka arah vertical
Vu,b	: Gaya geser ultimit balok
Vu,k	: Gaya geser ultimit kolom
Wt	: Berat total keseluruhan gedung
Wy	: Berat tiap lantai pada arah y
Wx	: Berat tiap lantai pada arah x
Zka	: Lengan momen kanan
Zki	: Lengan momen kiri
ρ	: Rasio tulangan tarik

ρ' : Rasio tulangan desak

ρb : Rasio tulangan pada keadaan seimbang

ωd : Koefisien pembesaran dinamis

αk : Faktor distribusi momen dari kolom yang ditinjau

6. Perencanaan Pondasi

a : Tinggi blok tekan

bk : Lebar penampang kolom

bo : Keliling penampang kritis pada pelat dan pondasi

Bx : Panjang pondasi telapak

By : Lebar pondasi telapak

d : Jarak pusat tulangan tarik ke serat tekan beton terluar

ex : Eksentrisitas gaya terhadap sumbu x

ey : Eksentrisitas gaya terhadap sumbu y

f'c : Kuat tekan beton

fy : Tegangan luluh baja

h : Tebal pondasi

hk : Panjang penampang kolom

Mx : Momen terhadap sumbu x

My : Momen terhadap sumbu y

Mu : Momen ultimit

Mn : Momen nominal

m_1 : Jarak geser dari tepi pondasi terhadap sumbu x

m	: Perbandingan isi dari tulangan memanjang dari bentuk tertutup
n_1	: Jarak geser dari tepi pondasi terhadap sumbu y
P	: Gaya tekan yang bekerja
Pb	: Selimut beton
Pn	: Gaya tekan nominal
$q_{terjadi}$	: Tegangan kontak yang terjadi di dasar pondasi
Rn	: Koefisien tahanan untuk perencanaan kuat
Vc	: Kuat beton menahan geser
x	: Panjang bidang geser kritis
y	: Lebar bidang geser kritis
ρ	: Rasio tulangan tarik
ρb	: Rasio tulangan dalam keadaan seimbang
β_1	: Rasio antara sisi panjang terhadap sisi pendek pondasi
βc	: Rasio sisi panjang terhadap sisi pendek dari beban terpusat

ABSTRAKSI

Dalam rangka menghadapi era globalisasi saat ini, mempersiapkan diri untuk menjadi seorang sarjana sipil berkualitas yang memiliki kemampuan teoritis dan mampu mengaplikasikan ilmunya di lapangan merupakan salah satu hal yang harus kita lakukan, oleh karena itu penyusun mengambil tugas akhir tentang Perencanaan Ulang Struktur(*Redesign*) Pasar Rakyat Teluk Kuantan Tahap – 2 Propinsi Riau sebagai penerapan ilmu yang didapat di bangku kuliah.

Disain struktur rangka atap baja menggunakan metode ASD (Allowable Stress Design) yaitu perencanaan elastis dari AISC, sedangkan disain struktur rangka beton bertulang digunakan metode perencanaan kuat ultimit berdasarkan SK SNI T-15-1991-03. Analisis struktur menggunakan program analisis SAP 2000 (3 Dimensi) dengan mengasumsikan semua elemen sebagai struktur yang bertranslasi (*sway*) kecuali pada kolom yang menghubungkan plat pondasi dan balok sloof (kaki kolom) diasumsikan sebagai elemen *Non Sway*.

Hasil perhitungan struktur pada Redesign ini adalah sebagai berikut :

a. Rangka atap
   - Gording dipakai profil *Light Lip Channel* ***C 125x50x20x3.2***
   - Sagrod dan Tierod dipakai baja tulangan diameter 12 mm
   - Kuda-kuda utama dipakai baja ***WF 200x150x6x9*** dan kuda – kuda sekunder bipakai baja WF ***148x100x6x9.***
b. Pada Struktur yang menggunakan beton bertulang digunakan dimensi penampang yang sama dengan yang digunakan di lapangan, namun memiliki kekuatan dan daktilitas yang lebih besar karena direncanakan dengan *konsep desain kapasitas* sehingga menghasilkan pembiayaan yang lebih besar pula.

1.3 Batasan Perencanaan

Ruang lingkup yang diperhitungkan dalam perencanaan ulang Pasar Rakyat Teluk Kuantan tahap – 2 pada penyusunan tugas akhir ini adalah :

1. Obyek perencanaan ulang adalah Pasar Rakyat Teluk Kuantan tahap – 2, meliputi :
   - Perencanaan atap
   - Perencanaan pelat lantai
   - Perencanaan balok
   - Perencanaan kolom
   - Perencanaan tangga
   - Perencanaan pondasi
2. Perencanaan ulang (redisain) ini meliputi perhitungan struktur bangunan dari atas sampai bawah dan tidak ada perubahan titik – titik perletakan pada struktur
3. Rencana anggaran biaya (RAB) tidak termasuk kedalam penelitian.
4. Perencanaan atap menggunakan kuda – kuda baja yang memenuhi persyaratan SII 0136 – 84.
5. Perencanaan struktur menggunakan mutu beton dengan kuat desak rencana (f'c) = 22,5 MPa.
6. Perencanaan struktur menggunakan baja tulangan polos (BJTP) untuk $\phi \leq 12$ mm dengan tegangan leleh (fy = 240 MPa, sedangkan untuk baja tulangan ulir (BJTD) untuk $\phi > 12$ mm dengan teganga leleh (fy) = 360 MPa.
7. Perencanaan pondasi diperhitungkan berdasarkan data karakteristik tanah yang ada dengan menggunakan jenis pondasi dalam menggunakan tiang pancang
8. Analisa mekanika struktur dengan program SAP 2000 3D versi 7.42
9. Kombinasi beban yang diperhitungkan adalah beban mati, hidup, dan beban horizontal gempa mengambil gempa wilayah 5 (Riau dan sekitarnya).

10. perencanaan konstruksi baja berdasarkan metode allowable stress design atau perencanaan elastis dari AISC.
11. secara keseluruhan struktur beton direncanakan menggunakan tingkat daktilitas penuh dengan nilai K =1.

1.4 Lokasi Proyek

Proyek Pasar Rakyat Teluk Kuantan tahap – 2 terletak di Jalan Sudirman Teluk Kuantan, secara geografis proyek ini berbatasan dengan (lihat gambar 1.1)

1. sebelah utara : Jl. Diponegoro
2. sebelah timur : Jl. Kartini
3. sebelah selatan : Jl. Kartini / Jl. Sudirman
4. sebelah barat : Jl. Sudirman

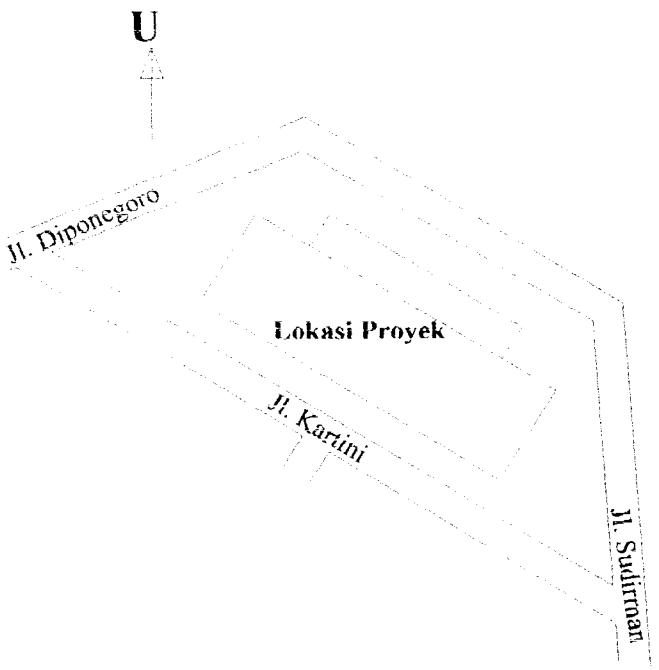

Gambar 1.1 Denah Lokasi Proyek

1.5 Metode perencanaan

Dalam perencanaan Pasar Rakyat Teluk Kuantan tahap – 2 dibagi menjadi bebarapa langkah yaitu:

1. Mengumpulkan data.
   Data ini berupa denah situasi, denah ruang, dan data tanah.
2. Mengumpulkan buku literatur sebagai dasar perencanaan.
3. Merencanakan spesifikasi struktur yang akan direncanakan.
4. Menganalisis spesifikasi struktur yang akan direncanakan.
5. Menggambar penulangan untuk tulangan pokok dan susut.

BAB II
TINJAUAN PUSTAKA

2.1 Pendahuluan

Desain struktur merupakan salah satu bagian dari keseluruhan proses perencanaan bangunan. Proses desain tersebut merupakan gabungan antara unsur seni dan sains yang membutuhkan seahlian dalam mengolahnya. Proses ini dibedakan dalam dua bagian. *Pertama*, desain umum yang merupakan peninjauan umum dari garis besar keputusan-keputusan desain. Tipe struktur dipilih dari berbagi alternatif yang mungkin. Tata letak struktur, geometri atau bentuk bangunan, jarak antar kolom, tinggi lantai, dan material bangunan telah ditetapkan dengan tentatif/pasti pada tahap ini. Tahap *kedua*, desain terinci yang antara lain meninjau tentang penentuan besar penampang lintang balok, kolom, tebal pelat, dan elemem struktur lainnya. Kedua proses desain ini saling mengait. (Wahyudi dan Rahim, 1997:2)

2.2 Struktur Bawah

Yang dimaksud dengan struktur bawah (*sub structure*) adalah bagian bangunan yang berada di bawah permukaan. Dalam proses perencanaan ulang (redesain) Pasar Rakyat Teluk Kuantan Tahap – 2 ini hanya meliputi : pondasi.

2.2.1 Pondasi

Pondasi adalah suatu konstruksi yang berfungsi untuk meneruskan beban-beban bangunan atas ke tanah yang mampu mendukungnya. (Sidharta dkk, 1999:347)

Pondasi umumnya berlaku sebagai komponen struktur pendukung bangunan yang terbawah, dan telapak pondasi berfungsi sebagai elemen terakhir yang meneruskan beban ke tanah, sehingga telapak pondasi harus memenuhi persyarata untuk mampu dengan aman menyebarkan beban-beban yang diteruskan sedemikian rupa sehingga kapasitas atau daya

dukung tanah tidak terlampaui. Sehingga perlu diperhatikan bahwa dalam merencanakan pondasi harus memperhitungkan keadaan yang berhubungan dengan sifat-sifat mekanika tanah. Dasar pondasi harus diletakkan di atas tanah kuat pada keadaan cukup tertentu, bebas dari lumpur, humus, dan pengaruh perubahan cuaca.*(Dipohusodo, 1994:342)*.

2.3 Struktur Atas

Struktur atas atau *upper structure* adalah elemen bangunan yang berada di atas permukaan tanah. Dalam proses perencanaan ulang (redesain) Pasar Rakyat Teluk Kuantan Tahap – 2 meliputi: atap, plat, kolom, balok, portal, tangga.

2.3.1 Atap

Atap adalah elemen struktur yang berfungsi meliputi bangunan beserta apa yang ada di dalamnya dari pengaruh panas dan hujan. Bentuk atap tergantung dari beberapa faktor misalnya: iklim, arsitektur, modelitas bangunan, dan sebagainya, dan menyerasikannya dengan rangka bangunan atau bentuk denah agar dapat menambah indah dan anggun serta menambah nilai dari harga bangunan itu. Struktur atap pada Proyek Pasar Rakyat Teluk Kuantan Tahap – 2 ini menggunakan kuda – kuda rangka baja.

2.3.2 Pelat

Pelat merupakan panel-panel beton bertulang yang mungkin tulangannya dua arah atau satu arah saja, tergantung sistem strukturnya. Kontinuitas penulangan pelat diteruskan ke dalam balok-balok dan diteruskan ke dalam kolom. Dengan demikian, sistem pelat secara keseluruhan menjadi satu kesatuan membentuk rangka struktur bangunan kaku statis tak tentu yang sangat kompleks. Perilaku masing-masing komponen struktur dipengaruhi oleh hubungan kaku dengan komponen lainnya. Beban tidak hanya mengakibatkan timbulnya momen, gaya geser,

dan lendutan, langsung pada komponen struktur yang menahannya, tetapi komponen-komponen struktur lain yang berhubungan juga ikut berinteraksi karena hubungan kaku antar komponen. *(Dipohusodo, 1994:207).*

Berdasarkan perbandingan antara bentang panjang dan bentang pendek pelat dibedakan menjadi dua, yaitu: pelat satu arah dan pelat dua arah. Pada Proyek Pasar Rakyat Teluk Kuantan Tahap – 2 ini menggunakan pelat beton bertulang.

2.3.2.1 Pelat satu arah

Pelat satu arah adalah pelat yang didukung pada dua tepi yang berhadapan saja sehinga lendutan yang timbul hanya satu arah saja yaitu pada arah yang tegak lurus terhadap arah dukungan tepi. Atau dengan kata lain pelat satu arah adalah pelat yang mempunyai perbandingan antara sisi panjang terhadap sisi pendek yang saling tegak lurus lebih besar dari dua dengan lendutan utama pada sisi yang lebih pendek *(Dipohusodo, 1994:45).*

2.3.2.2 Pelat dua arah

Pelat dua arah adalah pelat yang didukung sepanjang keempat sisinya dengan lendutan yang akan timbul pada dua arah yang saling tegak lurus atau perbandingan antara sisi panjang dan sisi pendek yang saling tegak lurus kurang dari dua *(Dipohusodo, 1994:45).*

2.3.3 Kolom

Kolom adalah komponen struktur bangunan yang tugas utamanya menyangga beban aksial desak vertikal dengan bagian tinggi yang tidak ditopang paling tidak tiga kali dimensi lateral terkecil. (SK SNI T-15-1991-03)

Secara garis besar kolom adalah batang tekan vertikal dari rangka (*frame*) struktur yang memikul beban dari balok induk maupun balok anak

serta meneruskan beban dari elevasi atas ke elevasi yang lebih bawah hingga akhirnya sampai ke tanah melalui pondasi. Pada Proyek Pasar Rakyat Teluk Kuantan Tahap – 2 ini menggunakan kolom beton bertulang.

2.3.4 Balok

Balok adalah bagian struktural yang berfungsi sebagai pendukung beban vertikal dan horizontal. Beban vertikal berupa beban mati dan beban hidup yang diterima pelat lantai, berat sendiri balok dan berat dinding penyekat yang di atasnya. Beban horizontal dapat berupa beban angin dan beban gempa.

Balok merupakan bagian struktural bangunan penting dan bertujuan untuk memikul beban tranversal yang dapat berupa beban lentur, geser, maupun torsi. Oleh karena itu perencanaan balok yang efisien, ekonomis, dan aman sangat penting. *(Sudarmoko, 1996)*. Yang dimaksud balok induk adalah balok yang menumpu pada kolom sedangkan balok anak adalah balok yang menumpu pada balok induk.

2.3.5 Portal

Porta adalah suatu rangka struktur pada bangunan yang harus mampu menahan beban-beban yang bekerja, baik beban mati, beban hidup, maupun beban sementara. Portal merupakan suatu sistem struktur kerangka yang terdiri dari rakitan elemen struktur yang berupa beton bertulang elemen balok, kolom.

2.3.5.1 Portal tak bergoyang (*braced frame*)

Portal tak bergoyang didefinisikan sebagai portal dimana tekuk goyangan dicegah oleh elemen-elemen topangan struktur tersebut dan bukan oleh portal itu sendiri.

Portal tak bergoyang mempunyai sifat antara lain:

1. Portal tersebut simetris dan bekerja beban simetris.

2. portal yang mempunyai kaitan dengan konstruksi lain yang tidak dapat bergoyang.

2.3.5.2 Portal bergoyang

Suatu portal dinyatakan bergoyang jika:

1. Beban yang tidak simetris yang bekerja pada portal yang simetris atau tidak simetris.
2. beban simetris yang bekerja pada portal yang tidak simetris.

2.3.6 Tangga

Tangga adalah jalur bergerigi (mempunyai trap-trap) yang menghubungkan satu lantai dengan lantai di atasnya, sehingga berfungsi sebagai jalan untuk naik dan turun antara tingkat.

2.4 Pembebanan

2.4.1 Macam-macam pembebanan

Beban-beban yang bekerja pada struktur umumnya dapat digolongkan menjadi 5 macam (PBI 1983):

1. Beban mati

   Beban mati adalah berat dari semua bagian dari suatu gedung yang bersifat tetap, termasuk segala unsur tambahan, penyelesaian-penyelesaian, mesin-mesin serta peralatan tetap yang merupakan bagian yang tak terpisah dari gedung itu.

2. Beban hidup

   Beban hidup adalah semua beban yang terjadi akibat penghunian atau penggunaan suatu gedung, dan kedalamannya termasuk beban-beban pada lantai yang berasal dari barang yang dapat berpindah, mesin-mesin serta peralatan yang tidak merupakan bagian yang tidak terpisah dari gedung dan dapat diganti selama masa hidup dari gedung itu sehingga mengakibatkan perubahan dalam pembebannan lantau dan atap tersebut. Khusus pada atap ke dalam beban hidup dapat termasuk beban

yang berasan dari air hujan, baik akibat genangan maupun akibat tekanan jatuh (energi kinetik) butiran air. Ke dalam beban hidup tidak termasuk beban angin, beban gempa, dan beban khusus.

3. Beban angin

   Beban angin adalah beban yang bekerja pada gedung atau bagian gedung yang disebabkan oleh selisih dalam tekanan udara.

4. Beban gempa

   Beban gempa adalah semua beban statik ekuivalen yang bekerja pada gedung atau bagian gedung yang menirukan pengaruh dari gerakan tanah akibat gempa itu. Dalam hal pengaruh gempa pada struktur gedung ditentukan berdasarkan suatu analisa dinamik, maka yang diartikan dengan beban gempa di sini adalah gaya-gaya di dalam struktur tersebut yang terjadi oleh gerakan tanah akibat gempa itu.

5. Beban khusus

   Beban khusus adalah semua beban yang bekerja pada gedung atau bagian gedung yang terjadi akibat selisih suhu, pengangkatan dan pemasangan, penurunan pondasi, susut, gaya-gaya tambahan yang berasal dari beban hidup seperti gaya rem yang berasal dari kren *(crane)*, gaya sentripegal dan gaya dinamis yang berasal dari mesin-mesin serta pengaruh-pengaruh khusus lainnya.

2.4.2 Kombinasi pembebanan

Provisi keamanan yang disyaratkan dalam SNI T-15-1991-03 dapat dibagi dalam dua bagian yaitu: provisi faktor beban dan provisi faktor reduksi kekuatan.

Kuat perlu adalah (U) adalah kekuatan suatu komponen struktur atau penampang yang diperlukan untuk menahan beban terfaktor atau momen dan gaya dalam yang berkaitan dengan beban tersebut dalam suatu kombinasi seperti yang ditetapkan dalam tat cara ini.(SK SNI T-15-1991-03)

Kuat perlu (U) dari suatu struktur harus dihitung dengan bebarapa kombinasi beban yang bekerja pada struktur tersebut (pasal 3.2.2. SNI T-15-1991-03).

1. Untuk kondisi beban mati (D) dan beban hidup (L)

$$U = 1{,}2\ D + 1{,}6\ L \qquad \text{.....} (2.1)$$

2. Bila beban angin (W) turut diperhitungkan maka pengaruh kombinasi beban mati (D), beban hidup (L) dan beban angin (W), berikut ini harus dipilih untuk menentukan nilai kuat perlu (U) terbesar.

$$U = 0{,}75\ (1{,}2D + 1{,}6\ L + 1{,}6W) \text{.....} (2.2)$$

Dengan beban hidup (L) yang penuh dan kosong untuk mendapatkan kondisi yang paling berbahaya sehingga:

$$U = 0{,}9D + 1{,}3W \qquad \text{.....} (2.3)$$

Dengan catatan bahwa untuk setiap kombinasi beban D, L, dan W akan diperoleh kekuatan U yang tidak kurang dari persamaan . 2.1

3. Bila ketahanan struktur terhadap beban gempa (E) turut diperhitungkan

$$U = 1{,}05\ (D + L_R \pm E) \qquad \text{.....} (2.4)$$

Atau

$$U = 0{,}9\ (D \pm E) \qquad \text{.....} (2.5)$$

Dengan L_R = beban hidup yang telah direduksi sesuai dengan ketentuan SNI 1726-1989-F tentang Tata Cara Perencanaan Untuk Rumah dan Gedung. Nilai beban gempa (E) ditetapkan berdasarkan ketentuan SNI 1726-1989-F.

4. Bila tekanan horizontal tanah (H) turut diperhitungkan kuat perlu (U) minimum harus sama dengan:

$$U = 1{,}2\ D + 1{,}6\ L + 1{,}6\ H \qquad \text{.....} (2.6)$$

Untuk keadaan dimana pengaruh beban mati (D) beban hidup (L) mengurangi efek dari tekanan horizontal tanah (H) koefesien beban mati (D) berubah menjadi 0,9 dan beban hidup (L) menjadi 0 sehingga:

$$U = 0{,}9\ D + 1{,}6\ H \qquad \text{.....} (2.7)$$

Nilai persamaan **2.6** dan **2.7** tidak boleh lebih kecil dari persamaan **2.1**

5. Bila pengaruh struktural (T) seperti akibat perbedaan penurunan (*differensial settlement*), rangka, susut, atau perubahan suhu cukup menentukan dalam perencanaan, kuat perlu (U) harus diambil sebagai berikut:

$$U = 0{,}75\,(1{,}2\,D + 1{,}2\,T + 1{,}6\,L) \quad \text{.....(2.8)}$$

Tetapi nilai kuat perlu (U) ini tidak boleh kurang dari:

$$U = 1{,}2\,(D+T) \quad \text{.....(2.9)}$$

2.4.3 Faktor reduksi kekuatan

Ketidakpastian kekuatan bahan terhadap pembebanan dianggap sebagai faktor reduksi kekuatan menurut SK SNI T-15-1991-03, faktor reduksi ditentukan sebagai berikut:

No	Gaya yang bekerja	Nilai ϕ
1	Lentur tampa beban aksial	0,8
2	Aksial tarik dan aksial tarik dengan lentur	0,8
3	Aksial tekan dan aksial tekan dengan lentur:	
	Dengan tulangan spiral	0,7
	Dengan tulangan sengkang ikat	0,65
4	Geser dan torsi	0,6
5	Tumpuan pada beton	0,7

2.5 Dasar-dasar perencanaan

Peraturan-peraturan atau standarisasi yang digunakan dalam perencanaan ulang *(redesain)* Pasar Rakyat Teluk Kuantan tahap – 2 adalah:

- Peraturan perencanaan gempa Indonesia untuk gedung (PPTGIUG) 1983.
- Peraturan pembebanan Indonesia untuk gedung (PBIUG) 1987.
- SK SNI T-15-1991-03
- Peraturan beton bertulang Indonesia (PBBI) 1971 NI-2

- Peraturan perencanaan bangunan baja Indonesia (PPBBI) 1984
- Pedoman perencanaan untuk struktur beton bertulang biasa dan struktur dan beton bertulang untuk gedung 1983.

3.1.3 Perencanaan Tierod

Gaya batang $T = \dfrac{P}{\cos\alpha}$ ..... **(3.12)**

$T = 0{,}33 \cdot Fu \cdot A_{tierod}$ ..... **(3.13)**

Sehingga :

$A_{tierod} = \dfrac{T}{0{,}33Fu} = \dfrac{1}{4} \cdot \pi \cdot D^2 tierod$ ..... **(3.14)**

$D_{tierod} = \sqrt{\dfrac{(P_{\gamma} \cdot 4)}{(0{,}33 \cdot Fu \cdot \pi)}}$ ..... **(3.15)**

$D_{pakai} = D_{tierod} + 3$ mm ..... **(3.16)**

Dimana :
- T = tegangan yang bekerja (kips)
- Fu = Kuat tarik baja (ksi)
- D = Diameter baja (in)
- A = Luas Penampang (in^2)

3.1.4 Perencanaan Batang Tarik

Langkah-langkah perencanaan batang tarik :

1. Menentukan angka kelangsingan ($\lambda = L/r$) maksimun

   Walaupun stabilitas bukan merupakan kriteria dalam perencanaan batang tarik, kita tetap perlu membatasi panjangnya untuk mencegah batang terlalu fleksibel sehingga mudah melentur (Salmon).

   Untuk elemen / batang utama ..... $\lambda = L/r \leq 240$

   Untuk elemen batang / batang sekunder / bracing ..... $\lambda = L/r \leq 300$

   Sehingga untuk elemen / batang utama, diperoleh :

   $r_{min} = \dfrac{L}{240}$ ..... **(3.17)**

2. Menentukan luas bruto (Ag), luas netto (An) dan luas efektif :

   $Ag_{1\ perlu} = \dfrac{T}{0{,}6Fy}$ ..... **(3.18)**

$$Ag_2 \text{ perlu} = \frac{T}{0{,}50 \cdot Fu \cdot \mu} + A_{\text{lubang}} \quad \text{..... ...(3.19)}$$

$$A_{\text{lubang}} = \left(\frac{1}{8} + \phi_{baut}\right) \cdot tp \cdot n \quad \text{..... (3.20)}$$

Dipakai profil yang luasannya (A) lebih besar dari nilai Ag perlu terpakai

$$A_{\text{netto}} = A_{\text{bruto}} - A_{\text{lubang}} \quad \text{..... (3.21)}$$

$$A_{\text{efektif}} = A_{\text{netto}} \cdot \mu \quad \text{..... (3.22)}$$

Di mana : L = Panjang batang (in)

T = Gaya Tarik (kips)

R = Jari-jari Inersia terkecil profil (in)

A_{netto} = Luas bersih penampang (in^2)

Ag = Luas kotor penampang (in^2)

n = Jumlah batang

tp = Tebal plat sambung (in)

μ = Faktor reduksi luas netto, dengan kriteria :

- Lebar sayap ≥ 2/3 x Kedalaman, sambungan pada sayap-sayap minimal 3 ikatan per garis dalam garis tekanan, μ=0,90
- Minimum 3 ikatan perbaris tekanan yang tidak sama dengan kriteria diatas, μ = 0,85
- 2 ikatan pergaris tekanan μ = 0,75

3. Kontrol Kelangsingan

$$\lambda_{ada} = \frac{K \cdot L}{r} \leq 240 \quad \text{..... (3.23)}$$

Di mana : KL/r = angka kelangsingan elemen tarik

4. Kontrol Tegangan Tarik yang terjadi

- Tampang tanpa Lubang : $fa = \frac{T}{Aprofil} \leq 0{,}6\ Fy$ ..... (3.24)
- Tampang dengan Lubang : $fa = \frac{T}{Aefektif} \leq 0{,}5\ Fu$..... (3.25)

Di mana : fa = Tegangan tarik yang terjadi (ksi)

3.1.5 Perencanaan Batang Desak

Langkah-langkah perencanaan batang desak :

1. Menentukan profil

   Dalam menentukan profil baja untuk batang desak, dapat dilakukan dengan proses yang sama pada batang tarik.

2. Kontrol terhadap tekuk dan Kelangsingan

   Setelah profil baja didapat, dilakukan terlebih dahulu dengan mengontrol tekuk setempat (*local buckling*) :

$$\frac{bf}{tw} \leq \frac{76}{\sqrt{Fy}} \quad \text{(ksi)} \qquad \text{..... (3.26)}$$

dan control kelangsingan

$$\frac{KL}{r} \leq Cc = \sqrt{\frac{2\pi^2 E}{Fy}} = \frac{755}{\sqrt{Fy}} \quad \text{(Fy dalam ksi) ..... (3.27)}$$

$$\leq Cc = \frac{6400}{\sqrt{Fy}} \quad \text{(Fy dalam Kg/cm}^2\text{)..... (3.28)}$$

$$\leq Cc = \frac{1987}{\sqrt{Fy}} \quad \text{(Fy dalam Mpa) ..... (3.29)}$$

$$FS = \frac{5}{3} + \frac{3}{8} \cdot \frac{KL/r}{Cc} - \frac{1}{8} \frac{(KL/r)^3}{Cc^3} \qquad \text{..... (3.30)}$$

$$Fa = \frac{Fy}{Fs}\left(1 - 0.5\left(\frac{KL/r}{Cc}\right)^2\right) \qquad \text{..... (3.31)}$$

Tetapi jika $\frac{KL}{r} > Cc$, maka :

$$Fa = \frac{12}{23} \cdot \frac{\pi^2 E}{(KL/r)^2} \qquad \text{..... (3.33)}$$

Dimana :

Fa = Tegangan ijin pada luas bruto dalam kondisi beban kerja (ksi)

KL/r = Angka kelangsingan elemen desak

FS = Faktor Keamanan

3. Kontrol Beban

$$T = Fa \cdot A \geq Pbatang \qquad \text{.....} \quad (3.34)$$

Dimana : T = beban ijin

P = Beban yang terjadi

3.1.6 Perencanaan Balok – Kolom

Langkah-langkah perencanaan batang desak :

1. Menentukan profil

$$S_{dibutuhkan} = \frac{M}{0{,}66 \, . \, Fy} \qquad \text{.....} \quad (3.35)$$

2. Kontrol terhadap tekuk dan Kelangsingan

$$\frac{L}{bf} \leq \frac{76}{\sqrt{Fy}} \quad ; \quad \frac{bf}{2tf} \leq \frac{65}{\sqrt{Fy}}$$

$$\frac{d}{tw} \leq \frac{640}{\sqrt{Fy}} \left(1 - 3{,}47 \frac{fa}{Fy}\right) \qquad \text{.....} \quad (3.36)$$

$$\frac{KL}{r} \geq Cc = \frac{6400}{\sqrt{Fy}} \qquad (\text{ Fy dalam } Kg/cm^2 \text{) , maka}$$

$$Fa = \frac{12}{23} \cdot \frac{\pi^2 E}{(KL/r)^2} \qquad \text{.....} \quad (3.37)$$

$$\frac{KL}{r} \leq Cc = \frac{6400}{\sqrt{Fy}} \qquad (\text{ Fy dalam } Kg/cm^2 \text{) , maka}$$

$$Fa = \frac{\left(1 - \frac{(KL/r)^2}{2\,Cc^2}\right) Fy}{\frac{5}{3} + \frac{3\,(KL/r)}{8\,Cc} - \frac{(KL/r)^3}{8\,Cc^3}} \qquad \text{.....} \quad (3.38)$$

3. Kontrol terhadap kombinasi tegangan

$$\frac{fa}{Fa} + \frac{fb}{Fb} \cdot \frac{C_m}{1 - \frac{fa}{F'_e}} \leq 1 \qquad \text{.....} \quad (3.39)$$

tegangan baut nominal

$$f_t = \frac{T}{A_b} \qquad \text{..... (3.50)}$$

komponen geser langsung

$$f_v = \frac{P}{\sum A} \qquad \text{..... (3.51)}$$

Cek tegangan tarik ijin bila digabungkan dengan geser (tabel 4.10.1 Charles G. Salmon)

$$F'_t \leq 379 - 1{,}8\, f_v \leq 303 \qquad \text{..... (3.52)}$$

3.2 PERENCANAAN PELAT 2 ARAH

3.2.1 Menentukan Tebal Minimum Pelat (h)

Pada SK SNI T-15-1991-03 Pasal 3.2.5 butir 3.3 memberikan pendekatan empiris mengenai batasan defleksi dilakukan dengan tebal pelat minimum sebagai berikut :

$$h \geq \frac{Ln \cdot \left(0{,}8 + Fy/1500\right)}{36 + 5\beta \cdot \left[\alpha_m - 0{,}12 \cdot \left(1 + \frac{1}{\beta}\right)\right]} \qquad \text{..... (3.53)}$$

tetapi tidak boleh kurang dari :

$$h \geq \frac{Ln \cdot \left(0{,}8 + Fy/1500\right)}{36 + 9\beta} \qquad \text{..... (3.54)}$$

Dan tidak perlu lebih dari

$$h \leq \frac{Ln \cdot \left(0{,}8 + Fy/1500\right)}{36} \qquad \text{..... (3.55)}$$

Dalam segala hal tebal minimum pelat tidak boleh kurang dari harga sebagai berikut :

- Untuk $\alpha m < 2{,}0$ digunakan nilai h minimal 120 mm
- Untuk $\alpha m \geq 2.0$ digunakan nilai h minimal 90 mm

di mana : Ln = Bentang bersih terkecil pada pelat dihitung dari muka kolom (mm)

αm = Rasio kekakuan balok terhadap pelat

β = Rasio panjang terhadap lebar bentang pelat

3.2.2 Menentukan Momen Lentur Pelat yang Terjadi

Perencanaan dan analisis dilakukan dengan menggunakan konsep beban Amplop yaitu dengan menggunakan *koefisien momen*,

Besar momen lentur adalah :

$$Mtx = 0{,}001 \cdot qu \cdot Lx^2 \cdot ctx \quad \text{.....} \quad (3.56)$$

$$Mlx = 0{,}001 \cdot qu \cdot Lx^2 \cdot clx \quad \text{.....} \quad (3.57)$$

$$Mty = 0{,}001 \cdot qu \cdot Lx^2 \cdot cty \quad \text{.....} \quad (3.58)$$

$$Mly = 0{,}001 \cdot qu \cdot Lx^2 \cdot cly \quad \text{.....} \quad (3.59)$$

Dimana : qu = Beban merata

Lx = Panjang bentang pendek

ctx = Koefisien momen tumpuan arah x

clx = Koefisien momen lapangan arah x

cty = Koefisien momen tumpuan arah y

cly = Koefisien momen lapangan arah y

Nilai Koefisien momen (c) diambil dari tabel 13.31 dan 13.3.2 PBBI 1971

3.2.3 Menentukan Tinggi Manfaat (d) arah x dan y

Pada pelat dua arah, tulangan momen positif untuk kedua arah dipasang saling tegak lurus. Karena momen positif arah bentang pendek (x) lebih besar dari bentang panjang (y), maka tulangan bentang pendek diletakkan pada lapis bawah agar memberikan d (tinggi manfaat) yang lebih besar.

dx = h-Pb-½·Dtul x ..... **(3.60)**

dy = h-Pb-Dtul x ½·Dtul y ..... **(3.61)**

dy untuk tulangan tumpuan arah y (ty) sama dengan dx

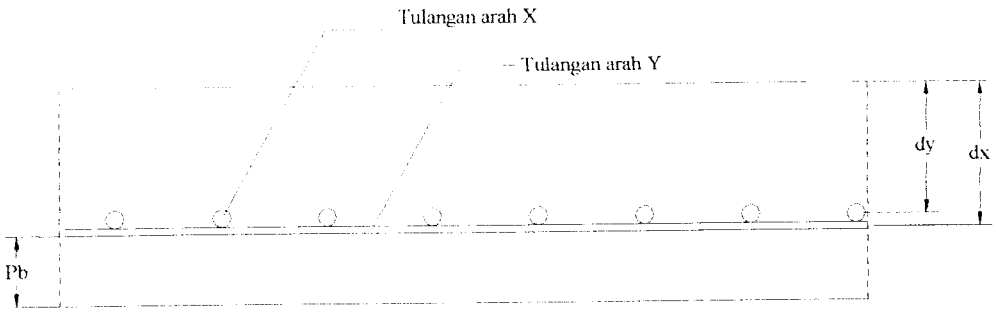

Gambar 3.1 Tinggi Manfaat Pelat Beton

3.2.4 Menentuka Luas Tulangan (As) arah x dan y

$$Rn = \frac{Mu/\phi}{b.d^2}$$ ..... **(3.62)**

$$m = \frac{fy}{0{,}85 \cdot f'c}$$ ..... **(3.63)**

$$\rho = \frac{1}{m} \cdot \left(1 - \sqrt{1 - \frac{2 \cdot m \cdot Rn}{fy}}\right)$$ ..... **(3.64)**

$$\rho_b = \frac{0{,}85 \cdot f'c}{Fy} \cdot \beta \cdot \left(\frac{600}{600 + Fy}\right)$$ ..... **(3.65)**

$$\rho_{maks} = 0{,}75 \cdot \rho_b$$ ..... **(3.66)**

$$\rho_{min} = \frac{1{,}4}{Fy}$$ ..... **(3.67)**

- Jika $\rho > \rho_{maks}$ ⟶ tebal minimum (h) harus diperbesar
- Jika $\rho_{min} < \rho < \rho_{maks}$ ⟶ dipakai nilai : $\rho_{perlu} = \rho$
- Jika $\rho < \rho_{min}$ dan :

  $1{,}33\,\rho > \rho_{min}$ ⟶ dipakai nilai : $\rho_{perlu} = \rho_{min}$

  $1{,}33\,\rho < \rho_{min}$ ⟶ dipakai nilai : $\rho_{perlu} = 1{,}33\rho_{ada}$

Setelah didapatkan nilai ρ_{perlu}, maka :

$As_{perlu} = \rho_{perlu} \cdot b \cdot d \geq As\ bagi/susut = 0{,}002 \cdot b \cdot h$ ..... **(3.68)**

Nilai lebar pelat (b), diambil tiap 1 meter (1000 mm).

Jarak antar tulangan: $s \leq \dfrac{A_1 \cdot b}{As_{perlu}}$ ..... **(3.69)**

$s \leq 2h$ ..... **(3.70)**

$s \leq 250$ mm ..... **(3.71)**

Diambil nilai jarak antar tulangan (s) yang terkecil, sehingga didapatkan nilai As_{ada}, yaitu : $As_{ada} = \dfrac{A_{1\phi} \cdot b}{s}$ ..... **(3.72)**

3.2.5 Kontrol Kapasitas Lentur Pelat yang terjadi

$$a = \frac{As_{ada} \cdot fy}{0{,}85 \cdot f'c \cdot b}$$ ..... **(3.73)**

$$Mn = As_{ada} \cdot fy \cdot \left(d - \frac{a}{2}\right) \geq \frac{Mu}{\phi}$$ ..... **(3.74)**

Bila $\rho_{perlu} = 1{,}33\rho_{ada}$, maka :

$$Mn = As_{ada} \cdot fy \cdot \left(d - \frac{a}{2}\right) \geq 1{,}33\frac{Mu}{\phi}$$ ..... **(3.75)**

3.2.6 Luas Tulangan Susut / Tulangan Bagi

$$\frac{As_{susut}}{As_{bagi}} = 0.002.b.h$$ ..... **(3.76)**

3.3 Perencanaan Balok

Langkah-langkah Perencanaan balok :

1. Menentukan mutu beton dan baja tulangan

Faktor blok tegangan beton (β1) menurut SK SNI T-15-1991-03 Pasal 3.3.2 butir 7.3 adalah :

- f'c ≤ 30 Mpa ⟶ β 1 = 0,85 Mpa
- f'c > 30 Mpa ⟶ β1 = 0,85-0,008 (f'c-30) ≥ 0,65 ..... **(3.77)**

2. Menentukan nilai rasio tulangan (ρ)

$$\rho b = \frac{0{,}85 f'c}{fy} \cdot \beta_1 \cdot \left(\frac{600}{600 + fy} \right) \quad \text{..... (3.78)}$$

$$\rho_{maks} = 0{,}75 \cdot \rho b \quad \text{..... (3.79)}$$

$$\rho_{min} = \frac{1{,}4}{fy} \quad \text{..... (3.80)}$$

disyaratkan : $\rho_{min} < \rho_{terpakai} < \rho_{maks}$

ρ b = Rasio tulangan terhadap luas beton efektif dalam kondisi seimbang

ρ_{maks} = Rasio tulangan maksimum

$\rho_{terpakai}$ = Rasio tulangan tang dipakai dalam perencanaan

ρ_{min} = Rasio tulangan minimum

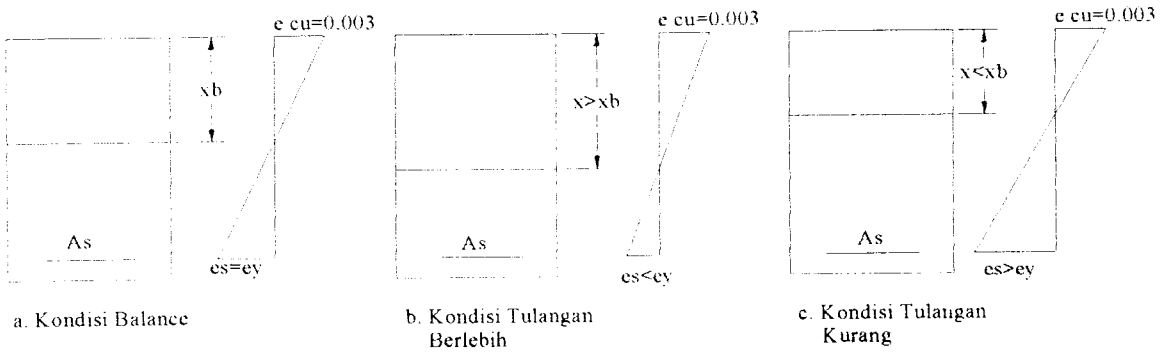

Gambar 3.2 Diagram Regangan Beton

3. Menentukan tinggi efektif (d) dan lebar (b) penampang beton

$$m = \frac{fy}{0{,}85 \cdot fc} \quad \text{.....} \quad (3.81)$$

$$Rn = \rho \cdot fy \cdot (1 - \tfrac{1}{2} \cdot p \cdot m) \quad \text{.....} \quad (3.82)$$

$$b \cdot d^2 = \frac{\frac{Mu}{\theta}}{Rn} \quad \text{.....} \quad (3.83)$$

tentukan b, sehingga didapat d perlu

- **Jika nilai d diketahui (≥) d perlu maka digunakan tulangan sebelah.**
- **Jika nilai d diketahui (<) d perlu maka digunakan tulangan rangkap.**

$D_{diketahui} = h_{diketahui} - Pb - Ø_{sengkang} - (1/2)\ Ø_{tul.rencana}$

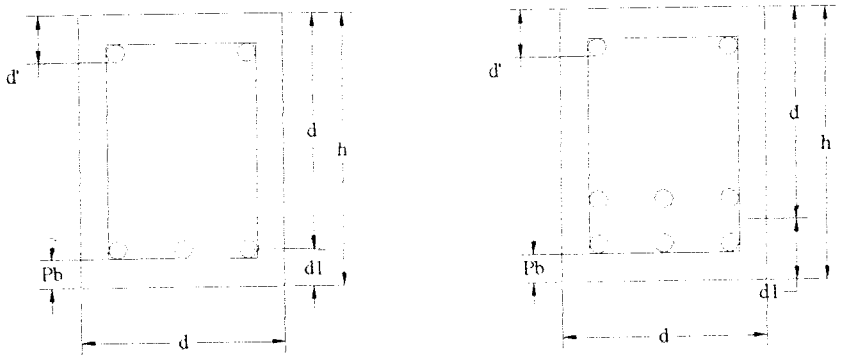

a. Tulangan Satu Lapis

b. Tulangan Dua Lapis

Gambar 3.3 Tinggi Efektif Tulangan Tarik Satu Lapis dan Dua Lapis

3.3.1 Perencanaan Balok Penampang Persegi Menahan Lentur dengan Tulangan Sebelah

Balok lentur dengan tulangan sebelah direncanakan **jika $d_{diketahui} \geq d_{perlu}$,** Langkah-langkah Perencanaannya sebagai berikut :

1. Menentukan ρada dan Rn_{ada}

$$Rn_{ada} = \frac{\frac{Mu}{\phi}}{b \cdot d^2_{diketahui}} \quad \text{.....} (3.85)$$

$$\rho_{ada} = \frac{Rn_{ada}}{A_{1\phi}} \cdot \rho > \rho_{min} \quad \text{.....} (3.86)$$

2. Menentukan Luas tulangan (As)

$$As = \rho_{ada} \cdot b \cdot d_{diketahui} \quad \text{.....} (3.87)$$

$$n = \frac{As}{A_{1\phi}} \quad \text{.....} (3.88)$$

$$As_{ada} = n \cdot A1\emptyset > As \quad \text{.....} (3.89)$$

Dimana:

As = Luas tulangan tarik diagonal (mm^2)

n = Jumlah tulangan yang dipakai

As_{ada} = Luas tulangan longitudional yang ada (mm^2)

ρ_{ada} = Rasio tulangan terhadap luas penampang beton

A1 = Luas 1 buah penampang (mm^2)

Rn_{ada} = Koefisien tahanan untuk perencanaan kekuatan

3. Kontrol Kapasitas Lentur yang terjadi

$$a = \frac{As_{ada} \cdot fy}{0{,}85 \cdot f'c \cdot b} \quad \text{.....} (3.90)$$

$$Mn = As_{ada} \cdot fy \cdot \left(d_{diketahui} - a/2\right) > Mu/\phi \quad \text{.....} (3.91)$$

Dimana : a = Tinggi blok tegangan persegi ekivalen (mm)

Mn = Kapasitas lentur nominal yang terjadi (Nmm)

3.3.2 Perencanaan Balok Penampang Persegi Menahan Lentur dengan Tulangan rangkap

Balok lentur tulangan rangkap direncanakan **bila nilai ddiketahui < dperlu**

Langkah-langkah penyelesaiannya sebagai berikut :

1. Menentukan As1 dan Mn1

Ambil $\rho_1 = \rho$ tul sebelah

$\rho_1 = \rho - \rho'$

$As_1 = \rho_1 \cdot b \cdot d_{diketahui}$ ..... **(3.92)**

Diambil $\rho_1 = \rho_{awal} = 0{,}5\ \rho_{maks}$

$$a = \frac{As_1 \cdot fy}{0{,}85 \cdot f'c \cdot b}$$ ..... **(3.93)**

$$Mn_1 = As_1 \cdot fy \cdot \left(d_{diketahui} - a/2\right) < Mu/\phi$$ ..... **(3.94)**

2. Menentukan Mn_2

$Mu/\phi \leq Mn = Mn_1 + Mn_2$

$$Mn_2 = Mu/\phi - Mn1$$ ..... **(3.95)**

Dimana :

Mn_1 = Kuat momen pas.kopel gaya beton tekan dan tul.tarik (Nmm)

Mn_2 = Kuat momen pas.kopel tul.baja tekan dan baja tarik tambahan (Nmm)

3. Menentukan As' = As2 dan As (kondisi dimana tul.desak dan tul.tarik mencapai leleh secara bersamaan)

Tegangan desak baja :

$$fs' = 600 \cdot \left\{1 - \frac{0{,}85 \cdot f'c \cdot \beta_1}{(\rho - \rho') \cdot fy} \cdot \frac{d'}{d_{diketahui}}\right\} \leq fy$$ ..... **(3.96)**

jika fs' ≥ fy,maka baja desak sudah leleh,sehingga dipakai fs'=fy

jika fs' < fy,maka baja desak belum leleh,sehingga dipakai fs'=fs'

$$As' = \frac{Mn_2}{fs' \cdot \left(d_{diketahui} - d'\right)}$$ ..... **(3.97)**

$n' \geq \frac{As'}{A_{t\phi}}$; n' bilangan bulat

n' ≥ 2 batang

As = As1 + As' ; As'=As2 ..... **(3.98)**

$$n \geq \frac{As}{A_{t\phi}}$$; n bilangan bulat

$n \geq 2$ batang

dimana : ρ' = Rasio tulangan tekan yang dipakai dalam perencanaan

As_1 = Luas Penampang tulangan baja tarik (mm^2)

As_2 = Luas penampang tulangan baja tarik tambahan (mm^2)

As' = Luas Penampang tulangan baja tekan (mm^2)

n' = Jumlah tulangan desak yang dipakai

n = Jumlah tulangan tarik yang dipakai

4. Kontrol kapasitas lentur yang terjadi

$$\rho = \frac{As}{b \cdot d_{diketahui}} \qquad \text{..... (3.99)}$$

$$\rho' = \frac{As'}{b \cdot d_{diketahui}} \qquad \text{..... (3.100)}$$

Tegangan tulangan desak :

$$fs' = 600 \cdot \left\{ 1 - \frac{0{,}85 \cdot f'c \cdot \beta_1}{(\rho - \rho') \cdot fy} \cdot \frac{d'}{d_{diketahui}} \right\} \leq fy$$

$$a = \frac{As \cdot fy - As' \cdot fs'}{0{,}85 \cdot f'c \cdot b} \qquad \text{..... (3.101)}$$

$$Mn = Mn_1 + Mn_2$$

$$= (As \cdot fy - As' \cdot fs') \cdot \left(d_{diketahui} - \tfrac{a}{2}\right) + (As' \cdot fs') \cdot (d_{diketahui} - d') \qquad \text{.... (3.102)}$$

3.3.3 Perencanaan Geser Balok

Langkah-langkah perencanaan tulangan geser balok anak :

1. Menentukan tegangan geser beton (Vc)

   Tegangan geser beton biasanya dinyatakan dalam fungsi dari $\sqrt{f'c}$ dan kapasitas beton dalam menerima geser menurut SK SNI-T15-1991-03 adalah sebesar :

$$Vc = \left(\frac{1}{6} \cdot \sqrt{f'c}\right) \cdot b \cdot d \quad \text{(Newton)} \qquad \text{.....(3.103)}$$

Sedangkan kekuatan minimal tulangan geser vertical dalam menahan geser dinyatakan dalam :

$Vs = \frac{1}{3} \cdot b \cdot d$ (Newton) .....(3.104)

2. Menentukan jarak Sengkang

Berdasarkan kriteria jarak sengkang pada SK SNI-T-15-1991-03,adalah :

- **Bila Vu ≤ 0,5 ØVc** .....(3.105)

  Geser tidak diperhitungkan

- **Bila 0,5 Vc < $\frac{Vu}{\phi}$ ≤ Vc** ..... (3.106)

  Perlu tulangan geser kecuali : struktur pelat (lantai, atap, pondasi), balok h ≤ 25 cm, atau h ≤ 2,5 hf.

  Adapun jarak tulangan geser menurut SK SNI-T-15-1991-03

  $s \leq \frac{Av \cdot fy \cdot d}{Vs_{min}}$ ..... (3.107)

  $\leq \frac{d}{2}$ .....(3.108)

  ≤ 600 mm

- **Bila Vc < $\frac{Vu}{\phi} \leq (Vc + Vs_{min})$** .....(3.109)

  Maka diperlukan tulangan geser dengan jarak :

  $s \leq \frac{Av \cdot fy \cdot d}{Vs_{min}}$

  $\leq \frac{d}{2}$

  ≤ 600 mm

- **Bila (Vc + Vsmin) < $\frac{Vu}{\phi}$ ≤ 3Vc** ..... (3.110)

  Maka perlu tulangan geser dengan jarak :

  $s \leq \frac{Av \cdot fy \cdot d}{\left(\frac{Vu}{\phi} - Vc\right)}$ ..... (3.111)

$\leq d/2$

≤ 600 mm

- **Bila 3Vc** $< Vu/\phi \leq$ **5 Vc** .....(3.112)

Maka perlu tulangan geser dengan jarak :

$$s \leq \frac{Av \cdot fy \cdot d}{\left(\frac{Vu}{\phi} - Vc\right)}$$

$\leq d/4$

≤ 300 mm

- **Bila** $Vu/\phi >$ **5Vc** .....(3.113)

Maka dimensi balok diperbesar

Dimana :

Vsmin = Kuat geser nominal tulangan geser minimal (N)

Vc = Tegangan ijin geser beton (Mpa)

Vu = Gaya geser berfaktor akibat beban luar (N)

Φ = Faktor reduksi kekuatan, diambil nilai 0,6 (geser & torsi)

Av = Luas penampang tulangan geser (mm)

3.3.4 Perencanaan Geser Dan Torsi Balok

Langkah-langkah penyelesaian geser dan torsi balok adalah:

1. Identifikasi jenis torsi
   - Untuk struktur statis tertentu (**torsi kesetimbangan**)

     Pengaruh torsi diperhitungkan apabila momen torsi terfaktor :

     $$Tu \geq \phi \left(\frac{1}{20} \cdot \sqrt{f'c} \cdot \sum x^2 \cdot y\right) \quad \text{..... (3.114)}$$

   - Untuk struktur statis tak tentu (**tersi kompabilitas**)

     Pengaruh torsi diperhitungkan apabila momen torsi terfaktor :

Untuk torsi kompabilitas :

$$Ts = \frac{1}{9}\sqrt{f'c \cdot \sum x^2 y \frac{1}{3} - Tc} \quad \text{..... ... (3.124)}$$

3. Jika $\frac{Tu}{\phi}$ > 4Tc ⟶ Tampang diperbesar

Di mana :

Tn = Kekuatan nominal tampang torsi (Nmm)

Tu = Kekuatan torsi terfaktor akibat beban geser (Nmm)

Ts = Kekuatan baja nominal menahan torsi (Nmm)

Tc = Kekuatan beton nominal menahan torsi (Nmm)

Nu = Gaya aksial terfaktor,(+) untuk tekan, (-) untuk tarik

Ag = Luas tampang beton (mm^2)

3. Menghitung perbandingan luas tulangan torsi dan jarak sengkang

$$\frac{At}{s} = \frac{Ts}{\alpha t \cdot x_1 \cdot y_1 \cdot fy} \quad \text{.....(3.125)}$$

$$\alpha t = \frac{1}{3}\left(2 + \frac{y_1}{x_1}\right) \leq 1{,}5 \quad \text{..... (3.126)}$$

4. Menentukan tulangan geser + torsi

Bila Vc < $\frac{Tu}{\phi}$, maka diperlukan tulangan geser

$$Vs = \frac{Tu}{\phi} - Vc \quad \text{.....(3.127)}$$

Perbandingan antara luas tulangan geser dan jarak :

$$\frac{Av}{Vs} = \frac{Vs}{fy \cdot d} \quad \text{.....(3.128)}$$

Luas total sengkang (tulangan torsi + geser)

$$\frac{Avt}{s} = \frac{2 \cdot At}{s} + \frac{Av}{s} \geq \frac{bw \cdot s}{3fy} \quad \text{.....(3.129)}$$

5. Menentukan luas torsi memanjang

$$Al_1 = 2 \cdot At\left(\frac{x_1 + y_1}{s}\right) \text{ atau;} \quad \text{..... (3.130)}$$

$$Al_1 = \left[\frac{2{,}8 \cdot x \cdot s}{fy}\left(\frac{Tu}{Tu + \frac{Vu}{3Ct}}\right) - 2 \cdot 2t\right]\left(\frac{x_1 + y_1}{s}\right) \quad \text{.....(3.131)}$$

Nilai Al1 diambil yang terbesar, tetapi Al1 tidak lebih dari :

$$Al_2 = \left[\frac{2{,}8 \cdot x \cdot s}{fy}\left(\frac{Tu}{Tu + \frac{Vu}{3Ct}}\right) - \frac{bw \cdot s}{3 \cdot fy}\right]\left(\frac{x_1 + y_1}{s}\right) \quad \text{.....(3.132)}$$

Di mana : Av = Luas sengkang menahan geser (mm^2)

At = Luas sengkang menahan torsi (mm^2)

Al = Luas tulangan memanjang tambahan pada torsi (mm^2)

6. Kriteria tulangan geser dan torsi

   - Jarak tulangan sengkang : $s \leq \frac{x_1 + y_1}{4}$ ..... **(3.133)**

     ≤ 300 mm

   - Tulangan memanjang disebar merata kesemua sisi dengan jarak tulangan memanjang ≤ 300 mm
   - Ø tulangan torsi memanjang ≥ 12 mm
   - fy tulangan torsi ≤ 400 Mpa
   - Tulangan torsi harus ada paling tidak sejauh (b + d) dari titik ujung teoritis torsi yang diperlukan

3.4 PERENCANAAN KOLOM

3.4.1 Perencanaan Kolom Pendek

1. Menentukan properties penampang kolom (b,h,f'c,fy,d',d)
2. Menghitung beban kapasitas kolom pendek

$$Pn = 0{,}85 \cdot f'c \cdot (Ag - Ast) + Ast \cdot fy \quad \text{.....(3.134)}$$

   - Untuk sengkang biasa :

$$\phi Pn = 0{,}80 \cdot [0{,}85 \cdot f'c(Ag - Ast) + fy \cdot Ast] \quad \text{.....(3.135)}$$

Karena Pu $\leq$ ØPn, maka:

$$Ag_{perlu} = \frac{Pu}{0{,}80 \cdot (0{,}85 \cdot f'c(1 - \rho g) + fy \cdot \rho g)} \quad \text{.....(3.136)}$$

• Untuk sengkang spiral :

$$\phi Pn = 0{,}85 \cdot [0{,}85 \cdot f'c(Ag - Ast) + fy \cdot Ast] \quad \text{.....(3.137)}$$

Karena Pu ≤ØPn, maka :

$$Ag_{perlu} = \frac{Pu}{0{,}85 \cdot (0{,}85 \cdot f'c(1 - \rho g) + fy \cdot \rho g)} \quad \text{.....(3.138)}$$

Sehingga setelah nilai Agperlu diperoleh, panjang dan lebar sisi kolom persegi atau diameter kolom bulat dapat ditentukan.

$Ag = b.h = \frac{1}{4}.\pi.D^2$ .....(3.139)

$Ast = n\ \%$; $Ag = As + As'$ .....(3.140)

$As' = As = Ast/2$ .....(3.141)

Di mana : Pn = Kuat desak aksial nominal pada kolom konsentris (N)

Pu = Gaya aksial terfaktor

Ast = luas tulangan total pada kolom (mm^2)

As' = Luas tulangan desak pada kolom (mm^2)

As = Luas tulangan tarik pada kolom (mm^2)

3. Kapasitas kolom dengan beban eksentris

(untuk lebih memahami rumus-rumus berikut, bandingkan dengan diagram tegangan-regangan pada kolom dengan pembebanan eksentris)

$$C = \frac{600}{600 + fy} \cdot d \quad \text{.....(3.142)}$$

$$f's = \frac{(C - d')}{C} \cdot 600 \quad \text{.....(3.143)}$$

$$fs = \frac{(d - C)}{C} 600 \quad \text{.....(3.144)}$$

Jika fs' > fy, maka fs'=fy

Jika fs' < fy, maka fs'=fs'

Cc = 0,85.f'c.b.a ..... (3.145)

Cs = As'.f's ..... (3.146)

Ts = As.fs .....(3.147)

Dimana: a = Tinggi blok tekan beton (mm)

= β.c

4. Tentukan nilai C yang digunakan :

Jika *C* > *Cb*, terjadi keruntuhan tekan

Jika *C* = *Cb*, terjadi keruntuhan *balanced*

Jika C < *Cb*, terjadi keruntuhan tarik

Syarat kegagalan:

a. Keruntuhan tekan

$C > Cb$; Pn > Pb ; Mn > Mnb

b. Keruntuhan *balanced*

$C = Cb$; $Pn = Pb$; $Mn = Mnb$

c. Keruntuhan tarik

$C < Cb$; $Pn < Pb$; $Mn < Mnb$

Dari Persamaan kesetimbangan ΣH=0 pada diagram tegangan regangan, diperoleh :

$$Pn = Cc + Cs - t \quad \text{.....(3.148)}$$

$$= 0{,}85.f'c.b.a + As'.f's - As.fs \quad \text{.....(3.149)}$$

$$Mn = Pn.e \quad \text{.....(3.150)}$$

$$= Cc.\left(C - \tfrac{a}{2}\right) + Cs.(C - d') + Ts.(d - C) \quad \text{.....(3.151)}$$

$$= 0{,}85.f'c.b.a.\left(C - \tfrac{a}{2}\right) + As'.f's(C - d') + As.fs(d - c) \quad \text{..(3.152)}$$

Sehingga diperoleh :

$$e = \frac{Mn}{Pn} \quad \text{.....(3.153)}$$

5. Gambar diagram Momen Nominal (Mn) dan Gaya Desak Nominal (Pn)

(Ast=1% Ag ; Ast=2% Ag ; Ast=3%Ag ; Ast= 4%Ag)

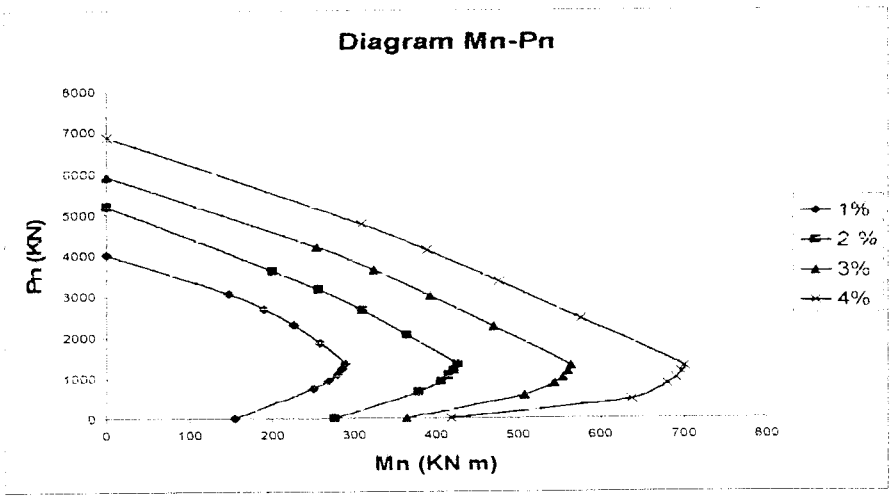

Gambar 3.4 Diagram Interaksi Mn-Pn

3.4.2 Perencanaan Kolom Panjang

Salah satu ragam keruntuhan kolom adalah kehilangan stabilitas lateral akibat tekuk. Apabila panjang kolom bertambah (kolom langsing) maka kemungkinan kolom runtuh karena tekuk akan semakin besar.

Adapun tahap-tahap perencanaan kolom langsing adalah sebagai berikut :

1. Menentukan tingkat kelangsingan kolom :
   - Untuk komponen struktur tekan yang ditahan terhadap goyangan ke samping

     $$Kl_u / r < 34 - 12M_{1b} / M_{2b} \qquad \text{.....(3.154)}$$

   - Untuk komponen struktur tekan yang tidak ditahan terhadap goyangan ke samping

     $$Kl_u / r < 22 \qquad \text{.....(3.155)}$$

   M1b dan M2b adalah momen pada ujung-ujung yang berlawanan pada kolom, dengan M2b adalah momen yang lebuh besar dan M1b adalah momem yang lebih kecil. Sedangkan lu merupakan panjang tak tertumpu kolom, k adalah factor panjang efektif yang ditentukan

berbagai kondisi pengekangan ujung terhadap rotasi dan translasi, sedangkan r adalah jari-jari girasi kolom.

Nilai M1b/M2b adalah positif untuk kelengkungan tunggal (*Single curvature*) dan negative untuk kelengkungan ganda (*Double Curvature*)

- Nilai k untuk berbagai kondisi ujung pada kolom :

Kedua ujung sendi, tidak tergerak lateral	k = 1,0
Kedua ujung sendi	k = 0,5
Satu ujung jepit, ujung yang lain bebas	k = 2,0
Kedua ujung jepit, ada gerak lateral	k = 1,0

- Untuk kolom yang merupakan bagian dari portal, Dalam SNI (1991) belum mengatur secara jelas cara menentukan besarnya nilai factor panjang efektif k (Sudarmoko). Menurut Wang (1986) prosedur yang paling umum digunakan untuk mendapatkan factor panjang efektif adalah dengan menggunakan grafik alinyemen dari *Structural Stability Research Council Guide* yaitu diagram Jackson dan Moreland.

Faktor panjang efektif merupakan fungsi dari factor kekangan ujung ψA dan ψB untuk masing-masing titik ujung atas dan bawah yang didefenisikan sebagai :

$$\psi = \frac{\sum\left(\frac{EI}{l_u}\right)kolom - kolom}{\sum\left(\frac{E_c I_{cr}}{l_n}\right)balok - balok} \qquad \text{.....(3.156)}$$

Untuk mendapatkan nilai jari-jari girasi r :

- Untuk kolom persegi dengan lebar b dan tinggi h yaitu :

$$r = \sqrt{\frac{Ig}{A}} = \sqrt{\frac{(bh^3)/12}{bh}} = 0{,}288h \approx 0{,}3h \qquad \text{.....(3.157)}$$

- Untuk kolom bundar dengan diameter D yaitu :

$$r = \sqrt{\frac{(\pi D^4)/64}{(\pi D^2)/4}} = 0{,}25D \qquad \text{.....(3.158)}$$

berbagai kondisi pengekangan ujung terhadap rotasi dan translasi, sedangkan r adalah jari-jari girasi kolom.

Nilai M1b/M2b adalah positif untuk kelengkungan tunggal (*Single curvature*) dan negative untuk kelengkungan ganda (*Double Curvature*)

- Nilai k untuk berbagai kondisi ujung pada kolom :

Kedua ujung sendi, tidak tergerak lateral	k = 1,0
Kedua ujung sendi	k = 0,5
Satu ujung jepit, ujung yang lain bebas	k = 2,0
Kedua ujung jepit, ada gerak lateral	k = 1,0

- Untuk kolom yang merupakan bagian dari portal, Dalam SNI (1991) belum mengatur secara jelas cara menentukan besarnya nilai factor panjang efektif k (Sudarmoko). Menurut Wang (1986) prosedur yang paling umum digunakan untuk mendapatkan factor panjang efektif adalah dengan menggunakan grafik alinyemen dari *Structural Stability Research Council Guide* yaitu diagram Jackson dan Moreland.

Faktor panjang efektif merupakan fungsi dari factor kekangan ujung ψA dan ψB untuk masing-masing titik ujung atas dan bawah yang didefenisikan sebagai :

$$\psi = \frac{\sum\left(\frac{EI}{l_u}\right)kolom - kolom}{\sum\left(\frac{E_C I_{Cr}}{l_n}\right)balok - balok} \qquad \text{.....(3.156)}$$

Untuk mendapatkan nilai jari-jari girasi r :

- Untuk kolom persegi dengan lebar b dan tinggi h yaitu :

$$r = \sqrt{\frac{Ig}{A}} = \sqrt{\frac{(bh^3)/12}{bh}} = 0{,}288h \approx 0{,}3h \qquad \text{.....(3.157)}$$

- Untuk kolom bundar dengan diameter D yaitu :

$$r = \sqrt{\frac{(\pi D^4)/64}{(\pi D^2)/4}} = 0{,}25D \qquad \text{.....(3.158)}$$

2. Menganalisis Kekuatan kolom Panjang

Apabila angka kelangsingan Klu/r melebihi persyaratan seperti yang tercantum dalam persamaan 3.148 & 3.149, maka digunakan dua metode stabilitas,yaitu :

A. Metode Pembesaran Momen (*Momen Magnification Method)*

Metode analisis ini didasrkan atas momen yang diperbesar Yang dinyatakan sebagai :

Mc = δM2 = δbM2b + δsM2s .....(3.159)

Dimana :

$$\delta_b = \frac{Cm}{1 - \frac{Pu}{\phi Pc}} \geq 1 \qquad \text{.....(3.160)}$$

$$\delta_s = \frac{1}{1 - \frac{\sum Pu}{\phi \sum Pc}} \geq 1 \qquad \text{.....(3.161)}$$

$$Pc = \frac{\pi^2 EI}{(K_{lu})^2} \qquad \text{.....(3.162)}$$

ΣPu dan ΣPc adalah penjumlahan gaya tekan dari semua kolom dalam satu tingkat.

1. Untuk rangkan yang tidak ditahan terhadap goyangan kesamping, nilai δb dan δs harus dihitung, serta nilai k harus lebih besar dari 1
2. Sedangkan untuk rangka yang ditahan terhadap goyangan kesamping, nilai δs harus diambil sebesar 0 dan nilai k lebih kecil dari satu
3. Untuk komponen struktur yang ditahan terhadap goyangan kesamping dan tanpa beban transversal diantara tumpuannya, Cm boleh diambil :

$$Cm = 0{,}6 + 0{,}4\frac{M_{1b}}{M_{2b}} \geq 0{,}4 \qquad \text{.....(3.163)}$$

4. Dan untuk kasus lain cm harus diambil sebesar 1

2. Menganalisis Kekuatan kolom Panjang

Apabila angka kelangsingan Klu/r melebihi persyaratan seperti yang tercantum dalam persamaan 3.148 & 3.149, maka digunakan dua metode stabilitas,yaitu :

A. Metode Pembesaran Momen (*Momen Magnification Method)*

Metode analisis ini didasrkan atas momen yang diperbesar Yang dinyatakan sebagai :

Mc = δM2 = δbM2b + δsM2s .....(3.159)

Dimana :

$$\delta_b = \frac{Cm}{1 - \frac{Pu}{\phi Pc}} \geq 1 \qquad \text{.....(3.160)}$$

$$\delta_s = \frac{1}{1 - \frac{\sum Pu}{\phi \sum Pc}} \geq 1 \qquad \text{.....(3.161)}$$

$$Pc = \frac{\pi^2 EI}{(K_{lu})^2} \qquad \text{.....(3.162)}$$

ΣPu dan ΣPc adalah penjumlahan gaya tekan dari semua kolom dalam satu tingkat.

1. Untuk rangkan yang tidak ditahan terhadap goyangan kesamping, nilai δb dan δs harus dihitung, serta nilai k harus lebih besar dari 1
2. Sedangkan untuk rangka yang ditahan terhadap goyangan kesamping, nilai δs harus diambil sebesar 0 dan nilai k lebih kecil dari satu
3. Untuk komponen struktur yang ditahan terhadap goyangan kesamping dan tanpa beban transversal diantara tumpuannya, Cm boleh diambil :

$$Cm = 0{,}6 + 0{,}4\frac{M_{1b}}{M_{2b}} \geq 0{,}4 \qquad \text{.....(3.163)}$$

4. Dan untuk kasus lain cm harus diambil sebesar 1

2. Menganalisis Kekuatan kolom Panjang

Apabila angka kelangsingan Klu/r melebihi persyaratan seperti yang tercantum dalam persamaan 3.148 & 3.149, maka digunakan dua metode stabilitas,yaitu :

A. Metode Pembesaran Momen (*Momen Magnification Method)*

Metode analisis ini didasrkan atas momen yang diperbesar Yang dinyatakan sebagai :

Mc = δM2 = δbM2b + δsM2s .....**(3.159)**

Dimana :

$$\delta_b = \frac{Cm}{1 - \frac{Pu}{\phi Pc}} \geq 1 \qquad \text{.....(3.160)}$$

$$\delta_s = \frac{1}{1 - \frac{\sum Pu}{\phi \sum Pc}} \geq 1 \qquad \text{.....(3.161)}$$

$$Pc = \frac{\pi^2 EI}{(K_{lu})^2} \qquad \text{.....(3.162)}$$

ΣPu dan ΣPc adalah penjumlahan gaya tekan dari semua kolom dalam satu tingkat.

1. Untuk rangkan yang tidak ditahan terhadap goyangan kesamping, nilai δb dan δs harus dihitung, serta nilai k harus lebih besar dari 1
2. Sedangkan untuk rangka yang ditahan terhadap goyangan kesamping, nilai δs harus diambil sebesar 0 dan nilai k lebih kecil dari satu
3. Untuk komponen struktur yang ditahan terhadap goyangan kesamping dan tanpa beban transversal diantara tumpuannya, Cm boleh diambil :

$$Cm = 0{,}6 + 0{,}4\frac{M_{1b}}{M_{2b}} \geq 0{,}4 \qquad \text{.....(3.163)}$$

4. Dan untuk kasus lain cm harus diambil sebesar 1

Menurut SNI-1991, bila perhitungannya menunjukkan bahwa pada kedua ujung suatu komponen struktur tekan yang tidak tertahan tidak terdapat momen atau bahwa eksentrisitas ujung yang diperoleh dari perhitungan kurang dari (15+0,03h) mm, M2b dalam persamaan 3.144 harus didasarkan pada suatu eksentrisitas minimum (15+0,03h)mm. Rasio dari M1b/M2b dalam persamaan 3.148 harus ditentukan dari salah satu ketetuan sebagai berikut :

a. Bila eksentrisitas ujung yang didapat dari perhitungan kurang dari (15+0,03h) mm, momen ujung yang didapat ari perhitungan boleh digunakan untuk menghitung M1b/M2b dalam persamaan 3.145,
b. Bila perhitungan menunjukkan bahwa pada dasarnya di kedua ujung dari suatu komponen struktur tekan tidak terdapat momen, rasio M1b/M2b harus diambil sama dengan 1

Sedangkan bila perhitungan menunjukkan bahwa pada kedua ujung dari suatu komponen struktur tekan yang tidak tertahan terhadap goyangan kesamping tidak terdapat momen atau bahwa eksentrisitas ujung yang diperoleh dari perhitungan kurang dari (15+0,03h) mm, maka M2b dalam persamaan 3.144 harus didasrkan pada suatu eksentrisitas minimum sebesar (15+0,03h) mm Untuk mendapatkan nilai EI digunakan hitungan yang lebih konservatif :

$$EI = \frac{E_c I_g / 2{,}5}{1 + \beta\, d} \qquad \text{.....(3.164)}$$

dimana :

$$Ec = 4700\ \sqrt{f'c} \qquad \text{.....(3.165)}$$

$$Es = 2.10^5\, Mpa \qquad \text{.....(3.166)}$$

$$I_g = \frac{1}{12} bh^3 \qquad \text{.....(3.167)}$$

$$\beta d = \frac{Momenbebanmatirencana}{Momentotalrencana} = \frac{1{,}2M_D}{1{,}2M_D + 1{,}6M_L} \qquad \text{.....(3.168)}$$

3.5.3 Koefisien Gempa Dasar (C)

Dalam perencanaan ulang ini, bangunan berada di wilayah gempa lima (5) daerah Riau dan sekitarnya, pada kondisi tanah keras

3.5.4 Faktor Keutamaan Gedung (I)

Nilai (I) diambil dari tabel 2.4 buku beton seri 3 Gideon Kusuma. Dalam perencanaan ulang ini digunakan nilai I=1

3.5.5 Faktor Jenis Bangunan (K)

Dalam perencanaan ulang ini bangunan direncanakan dengan daktilitas tingkat III (penuh), dengan nilai K=1

3.6 PERENCANAAN BALOK DAN KOLOM PORTAL

3.6.1 Perencanaan Balok Portal Terhadap Beban Lentur

Kuat lentur perlu balok portal (Mu,b) harus ditentukan berdasarkan kombinasi pembebanan tanpa atau dengan beban gempa, sebagai berikut :

$$Mu,b = 1,2\ Md,b + 1,6\ Ml,br \qquad \text{.....(3.172)}$$

$$Mu,b = 1,05\ (MD,b + ME,bR + ME,b) \qquad \text{.....(3.173)}$$

$$Mu,b = 0,9\ MD,b + ME,b \qquad \text{.....(3.174)}$$

Dimana :

MD,b = Momen lentur balok portal akibat beban mati tak berfaktor

ML,b = Momen lentur balok portal akibat beban hidup tak berfaktor

ME,b = Momen lentur balok portal akibat beban gempa tak berfaktor

Dalam perencanaan kapasitas balok portal, momen tumpuan negatif akibat kombinasi beban grafitasi dan beban gempa balok boleh diredistribusikan dengan menambah atau mengurangi dengan persentase yang tidak melebihi :

$$q = 30\left(1 - \frac{4}{3}\frac{\rho - \rho'}{\rho b}\right)\% \qquad \text{.....(3.175)}$$

Dengan syarat apabila tulangan balok portal telah direncanakan sehingga (ρ- ρ') tidak boleh melebihi 0,5 ρb. Momen lapangan dan

tumpuan pada bidang muka kolom yang diperoleh dari hasil redistribusi selanjutnya digunakan untuk menghitung penulangan lentur yang diperlukan. Untuk portal dengan daktilitas penuh perlu dihitung kapasitas lentur sendi plastis balok yang besarnya ditentukan sebagai berikut :

Mkap,b = Ø0 Mnak,b

Dimana :

Mkap,b = Kapasitas lentur aktual balok pada pusat pertemuan balok kolom dengan memperhitungkan luas tulangan sebenarnya terpasang.

Mnak,b = Kuat lentur nominal balok berdasarkan luas tulangan yang sebenarnya terpasang.

$Ø_0$ = Faktor penambahan kekuatan yang ditetapkan sebesar 1,25 untuk fy < 400 Mpa dan 1,40 untuk fy > 400 Mpa

3.6.2 Perencanaan Balok Portal Terhadap Beban Geser

Kuat geser balok portal yang dibebani oleh beban gravitasi sepanjang bentangnya harus dihitung dalam kondisi terjadi sendi-sendi plastis pada kedua ujung balok portal tersebut, dengan tanda yang berlawanan (positif,negatif), menurut persamaan berikut :

$$Vu,b = 0,7\frac{M_{kap} + M'_{kap}}{l_n} + 1,05V_g \qquad \text{.....(3.176)}$$

Tetapi tidak perlu lebih besar dari :

$$V_{u,b} = 1,07\left(V_{D,b} + V_{L,b} + \frac{4,0}{K}V_{E,b}\right) \qquad \text{.....(3.177)}$$

Dimana :

Mkap = Momen kapasitas balok berdasarkan tulangan yang sebenarnya terpasang pada salah satu ujung balok atau bidang muka kolom.

M'kap = Momen kapasitas balok berdasarkan tulangan yang sebenarnya terpasang pada ujung balok atau bidang muka kolom yang lain.

VD,b = Gaya geser balok akibat beban mati

VL,b = Gaya geser balok akibat beban hidup

VE,b = Gaya geser balok akibat beban gempa

Ln = Bentang bersih balok

3.6.3 Perencanaan Kolom Portal terhadap Beban Lentur dan Aksial.

Kuat lentur kolom portal dengan daktilitas penuh yang ditentukan pada bidang muka balok Mu,k harus dihitung berdasarkan terjadinya kapasitas lentur sendi pada kedua ujung balok yang bertemu dengan kolom tersebut, yaitu :

3.6. $\Sigma Mu,k = 0,7.\omega d.\ \Sigma Mkap,b$ .....(3.178)

Atau $\Sigma Mu,k = 0,7.\omega d.\alpha k.(Mkap.ki + Mkap.ka)$ .....(3.179)

Tetapi dalam segala hal tidak perlu lebih besar dari :

$Mu,b = 1,05.(MD,k + ML,k + 4/K\ ME,k)$ .....(3.180)

Sehingga : $\Sigma Mu,k = Mkap,ki + Mkap,ka$ .....(3.181)

Dimana :

ωd = Faktor pembesar dinamis yang memperhitungkan pengaruh terjadinya sendi plastis pada struktur secara keseluruhan, diambil nilai $\omega d = 1,3$

αd = Faktor distribusi momen kolom portal yang ditinjau sesuai dengan kekakuan relative kolom atas dan bawah

Mkap,ki = Momen kapasitas lentur balok disebelah kiri bidang muka kolom

Mkap,ka = Momen kapasitas lentur balok disebelah kanan bidang muka kolom

Sedangkan beban aksial rencana Nu,k yang bekerja pada kolom portal dengan daktilitas penuh, dihitung dengan :

$$Nu,k = \frac{0,7Rn\sum M_{kap,b}}{l_b} + 1,05N_{g,k} \quad \text{.....(3.182)}$$

Tetapi dalam segala hal tidak perlu lebih besar dari :

$$N_{u,k} = 1,05\left(N_{g,k} + {}^{4}\!/_{K}.N_{E,k}\right) \quad \text{.....(3.183)}$$

Dengan Rn = factor reduksi yang ditentukan sebesar :

1,0 untuk $1 < n < 4$

1,1-0,024 untuk $4 < n < 20$

0,6 untuk $n > 20$

Dimana : n = Jumlah lantai diatas kolom yang ditinjau

lb = Bentang balok dari as ke as kolom

Ng,k = Gaya aksial kolom akibat beban gravitasi

NE,k = Gaya aksial kolom akibat beban gempa

3.6.4 Perencanaan Kolom Portal Terhadap Beban Geser

Kuat geser kolom portal dengan daktilitas penuh berdasarkan sendi-sendi plastis pada ujung-ujung balok yang bertemu pada kolom tersebut, harus dihitung dengan cermat sebagai berikut :

$$V_{u,k} = \frac{M_{u,katas} + M_{u,kbawah}}{h'k} \qquad \text{.....(3.184)}$$

Dan dalam segala hal tidak perlu lebih besar dari :

$$V_{u,k} = 1{,}05.\left(M_{D,k} + M_{L,k} + \frac{4}{K} V_{E,k}\right) \qquad \text{.....(3.185)}$$

Kapasitas lentur sendi plastis kolom dapat dihitung :

$$M_{kap,kbawah} = \phi_0 M_{Nak,kbawah} \qquad \text{.....(3.186)}$$

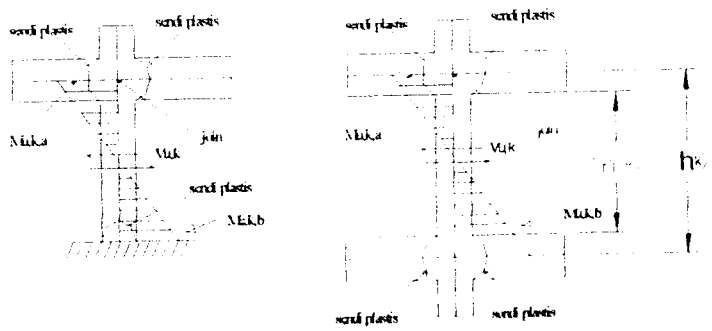

(a) Kolom lantai dasar (b) Kolom lantai atas

Gambar 3.5 Kolom Dengan Mu,k Berdasarkan Kapasitas Sendi Plastis

Di mana :

Mu,k atas = Momen rencana kolom ujung atas dihitung pada muka balok

Mu,k bawah = Momen rencana kolom ujung bawah dihitung pada muka balok

h'k = Tinggi bersih kolom

VD,k = Gaya geser kolom akibat beban mati

VL,k = Gaya geser kolom akibat beban hidup

VE,k = Gaya geser kolom akibat beban gempa

Mkap,k bawah = Kapasitas lentur ujung dasar kolom lantai dasar

Mkap,k atas = Kuat lentur nominal actual ujung dasar kolom lantai dasar

3.6.5 Perencanaan Panel Pertemuan Balok-Kolom

Panel pertemuan balok kolom portal harus diproporsikan sedemikian rupa, sehingga memenuhi persyaratan kuat geser horizontal perlu (Vu,h) dan kuat vertical perlu (Vu,v) yang berkaitan dengan terjadinya momen kapasitas pada sendi plastis pada kedua ujung balok yang bertemu engan kolom. Gaya-gaya yang membentuk keseimbangan pada join rangka adalah seperti yang terlihat pada gambar 3.5, dimana gaya geser horizontal :

$$Vjh = Cki + Tka - Vkol \quad \text{.....(3.187)}$$

$$Ck = Tki = 0{,}7\left(\frac{M_{kap,ki}}{Z_{ki}}\right) \quad \text{.....(3.188)}$$

$$Tk = Cka = 0{,}7\left(\frac{M_{kap,ki}}{Z_{ka}}\right) \quad \text{.....(3.189)}$$

$$V_{kol} = \frac{0{,}7\left(\frac{K_i}{K_i} M_{kap,ki} + \frac{K_a}{K_a} M_{kap,ka}\right)}{1/2\left(h_{k,a} + h_{k,b}\right)} \quad \text{.....(3.190)}$$

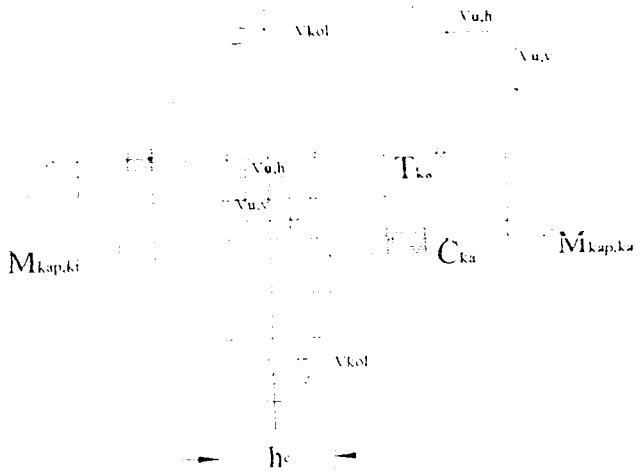

Gambar 3.6 Panel Pertemuan Balok & Kolom Dalam Kondisi Terjadinya Sendi Plastis Pada Kedua Ujung Balok

Tegangan horizontal nominal dalam joint adalah :

$$V_{jh_{aktual}} = \frac{V_{jh}}{b_j h_c} \leq 1.5\sqrt{f'c} \text{ (Mpa)} \qquad \text{.....(3.191)}$$

Dimana : dj = Lebar efektif joint (mm)

hc = Tinggi total penampang kolom dalam arah geser yang ditinjau (mm)

Gaya geser horizontal Vjh ini ditahan oleh dua mekanisme kuat geser inti joint, yaitu :

- Strat beton diagonal yang melewati daerah ujung tekan joint yang memikul gaya geser Vch
- Mekanisme panel rangka yang terdiri dari sengkang horizontal dan strat beton diagonal daerah tarik joint yang memikul gaya geser Vsh

Sehingga : Vsh + Vch = Vjh .....(3.192)

Besarnya Vch yang dipikuk oleh strat beton harus sama dengan nol, kecuali bila :

1. Tegangan tekan minimal rata-rata minimal pada penampang bruto kolom diatas join, termasuk tegangan prategang (apabila ada), melebihi nilai 0,1 f'c maka:

$$V_{ch} = \frac{2}{3}\sqrt{\left(\frac{N_{u,k}}{A_g}\right)} - 0{,}1.f'c.b_j.h_j \qquad \text{.....(3.193)}$$

2. Balok diberi gaya prategang yang melewati join, maka :

$$Vch = 0{,}7.Pcs \qquad \text{.....(3.194)}$$

Dengan Pcs adalah gaya permanent prategang yang terletak di sepertiga bagian tinggi kolom.

3. Seluruh balok pada join dirancang sehingga penampang kritis dari sendi plastis terletak pada jarak yang lebih kecil dari tinggi penampang balok yang diukur dari muka kolom, maka :

$$V_{ch} = 0{,}5.\frac{A_s'}{A_s}V_{jh}\left(1 + \frac{N_{u,k}}{0{,}4A_g.f'c}\right) \qquad \text{.....(3.195)}$$

Dimana rasio As'/As tidak boleh lebih besar dari satu (1).

Dengan memindahkan lokasi sendi plastis agak jauh dari muka kolom, maka kemampuan strat tekan tidak berkurang akibat beban bolak-balik dimana sebagian besar tegangan akan dipindahkan ke tulangan tekan. Pelelehan tulangan dapat juga mengakibatkan penetrasi kerusakan ikatan yang masuk ke inti join, sehingga ikatan antara tulangan dan strat tekan berkurang. Akibat kedua fenomena ini serta tekan pada join, sendi plastisnya terletak bersebelahan dengan muka kolom, tidak bekerja sehingga seluruh gaya geser Vjh dipikul oleh Vsh.

Bila tegangan rata-rata minimum pada penampang bruto kolom diatas join kurang dari 0,1 f'c (ρc < 0,1 f'c) maka :

$$V_{sh} = V_{jh} - \frac{2}{3}\sqrt{\left(\frac{N_{u,k}}{A_g}\right)} - (0.1.f'c)b_{jh} \qquad \text{.....(3.196)}$$

Pada join rangka dengan melakukan relokasi sendi plastis :

$$V_{sh} = V_{jh} - 0{,}5\frac{A_s'}{A_s}V_{jh}\left(1 + \frac{N_{u,k}}{0{,}4A_g.f'c}\right) \qquad \text{.....(3.197)}$$

Luas total efektif dari tulangan geser horizontal yang melewati bidang kritis diagonal dengan yang diletakkan di daerah tekan join efektif (bj) tidak boleh kurang dari :

$$A_{jh} = \frac{V_{sh}}{fy} \qquad \text{.....(3.198)}$$

Kegunaan sengkang horizontal ini harus didistribusikan secara merata diantara tulangan balok longitudional atas dan bawah.

Geser join vertical (Vjv) dapat dihitung dengan rumus :

$$V_{jv} = V_{jh}.\, {}^{h_c}\!/_{b_j} \qquad \text{.....(3.199)}$$

Tulangan join geser vertical didapat dari : $V_{sv} = V_{jv} - V_{cv}$

Menjadi : $$V_{cv} = A_{sc'}\frac{V_{sh}}{V_{sc}}\left(0{,}6 + \frac{N_{u,k}}{A_g.f'c}\right) \qquad \text{.....(3.200)}$$

Dimana : Asc' = Luas tulangan longitudional tekan

Asc = Luas tulangan longitudional tarik

Sehingga luas tulangan join vertical: $A_{jv} = \frac{V_{sv}}{fy}$ .....(3.201)

Persyaratan perencanaan proporsi rangka beton bertulang penahan gaya gempa dengan tingkat daktilitas 3 (penuh) dapat dilihat pada SK SNI T-15-1991-03 pasal 3.14.2 sampai dengan 3.14.8, sedangkan persyaratan untuk tingkat daktilitas 2 (terbatas) dapat dilihat pada pasal 3.14.9.

3.7 PONDASI

3.7.1 Perencanaan Pondasi.

Pondasi adalah bagian dari struktur yang berfungsi meneruskan beban akibat berat struktur secara langsung ketanah. Perancangan yang seksama diperlukan agar beban pondasi tidak mengakibatkan timbulnya

tekanan yang berlebihan pada tanah. Tekanan yang berlebihan dapat mengakibatkan penurunan yang besar dan dapat pula mengakibatkan keruntuhan pada struktur *(Bowles, 1986)*.

Pada proyek pembangunan Pasar Rakyat Teluk Kuantan Tahap – 2 ini menggunakan pondasi tiang pancang karena pondasi tiang pancang dapat mendukung beban stuktur yang besar dan kedalamannya dapat dibuat sedemikian rupa sampai menembus kelapisan tanah keras.

Pondasi tiang pancang adalah suatu struktur pondasi yang berbentuk tiang yang penempatannya pada lapisan tanah didasarkan pada kapasitas dukung ujung tiang maupun lekatan tanah pada keliling permukaan tiang pancang *(Sarjono, 1988)*.

Dalam merencanakan pondasi terdapat dua persyaratan yang harus dipenuhi :

1. Faktor aman terhadap keruntuhan akibat terlampauinya daya dukung tanah harus dipenuhi.
2. Penurunan pondasi harus mesih dalam batas – batas nilai yang ditoleransikan .

3.7.2 Daya dukung ujung tiang pancang tunggal

Pendekatan untuk menghitung kapasitas ultimit tiang menggunakan metode statis dan metode dinamis. Metode statis menggunakan parameter – parameter tanah dalam menghitung kapasitas daya dukung dan metode dinamisd mengestimasikan kapasitas daya dukung dari hasil analisis pemancangan tiang. Parameter tanah yang digunakan dalam metode statis adalah kohesi (c), sudut gesek (ø), berat volume tanah (γ) dan faktor daya dukung tanah *(N_c, N_q, N_γ)*. Nilai faktor daya dukung dipengaruhi oleh sudut gesek dalam, bila ø besar maka daya dukung tanah akan besar.

Berdasarkan data laboratorium, kapasitas daya dukung ujung tiang untuk tanah berbutir halus dan tanah berbutir kasar maupun tanah pada

umumnya *Mayerhoff* memberikan persamaan untuk menghitung kapasitas daya dukung ujung tiang sebagai berikut :

$$Q_p = A_p . N_c^* . C_u \qquad \text{.....(3.202)}$$

dengan : Q_p = Daya dukung ujung tiang

A_p = Luas penampang tiang

C_u = Kohesi tanah pada ujung tiang

N_c^* = Faktor daya dukung yang telah disesuaikan

Untuk data pengujian penetrasi standart (SPT = *standart Penetration Test*) maka *Mayerhoff* menggunakan rumus :

$$Q_p = A_p . q_p \leq A_p . \left(400 . \overline{N}\right) \text{ satuan dalam KN} \qquad \text{.....(3.203)}$$

$$q_p = 40 . \overline{N} . \frac{l_b}{D} \qquad \text{.....(3.204)}$$

dengan : $\overline{N}$ = Nilai rata – rata bilangan SPT pada 8D di atas sampai dengan 3D di bawah titik tiang

D = lebar atau diameter tiang pancang

$\frac{l_b}{D}$ = Perbandingan kedalaman rata – rata dari titik

Untuk tahanan selimut N-SPT menggunakan persamaan berikut ini :

$$Qs = fav . As \qquad \text{.....(3.205)}$$

dengan : fav = $2 . \overline{N}s$

Jika data diperoleh dari hasil penetrasi kerucut (CPT = *Cone Penetration Test*) digunakan rumus :

$$Qp = A_p . q_c \text{ (satuan dari } q_c \text{)} \qquad \text{.....(3.206)}$$

Dengan qc merupakan nilai rata – rata statistik dari tahanan titik kerucut seperti pada $\overline{N}$ dari persamaan (3. 186)

Kapasitas daya dukung selimut tiang dihitung dengan menggunakan persamaan :

$$Qs = A_s . JHP \qquad \text{.....(3.207)}$$

Untuk memperoleh daya dukung ultimit tiang pancang tunggal digunakan rumus :

$$Q_u = Q_p + Q_s \qquad \text{.....(3.208)}$$

dengan : Q_u = daya dukung ultimit tiang pancang tunggal

Q_p = tahanan ujung tiang

Q_s = tahanan selimut tiang

Sedangkan daya dukung ijin tiang (Q_{all}) adalah :

$$Q_{all} = \frac{Q_u}{SF} \qquad \text{.....(3.209)}$$

Besar nilai angka aman (SF = *Safety Factor*) berkisar dari 1,5 sampai 4.

3.7.3 Kapasitas Dukung Tiang Kelompok

Kemungkinan struktur pondasi terdiri dari sebuah tiang pancang tunggal sangat jarang, paling sedikit dua atau tiga tiang pancang dibawah elemen pondasi atau kaki pondasi dikarenakan masalah penjajaran atau eksentrisitas yang kurang baik.

Bila beberapa tiang pancang dikelompokkan, diperkirakan bahwa tekanan – tekanan tanah (baik gesekan maupun ujung) yang terjadi di dalam tanah sebagai hambatan akan saling *overlap* (tumpang tindih). Jarak antar tiang pancang yang besar seringkali tidak praktis karena sungkup tiang pancang *(pile cap)* dicor di atas kelompok tiang pancang *(pile group)* sebagai dasar kolom dan untuk menyebarkan beban pada beberapa tiang pancang dalam kelompok tersebut.

Jarak minimum antar tiang pancang yang disarankan oleh beberapa peraturan bangunan dalam tabel 3.01 berikut ini:

Tipe tiang pancang	**BOCA, 1984**	**NBC, 1976**	**Chicago, 1987**
Gesekan	2d atau 1.75 H ≥ 30 in	2d atau 1.75 H ≥ 30 in	d atau 1.75 H ≥ 30 in

Dukungan ijin	2d atau 1.75 H ≥ 24 in	2d atau 1.75 H ≥ 24 in	

Tabel 3.1 Jarak Minimum Antar Tiang Pancang

Dengan : d = diameter tiang pancang

H = diagonal empat persegi tiang pancang atau tiang pancang H

Untuk beban vertikal, jarak antara (s) yang optimum berkisar antara 2.5D sampai 3.5D. Untuk gambar susunan kelompok tiang pancang dapat dilihat pada gambar

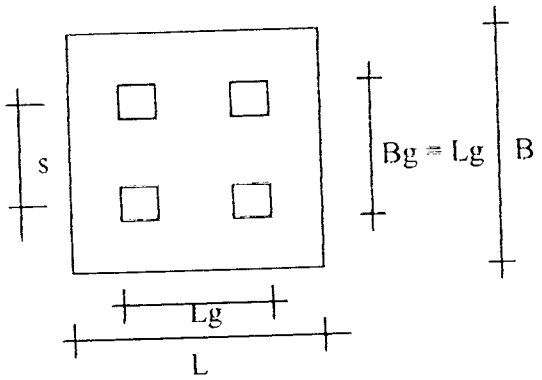

Gambar. 3.7 Susunan Kelompok Tiang Pancang

$$Bg = Lg = (m-1).s + 2.\frac{d}{2} \qquad \text{.....(3.210)}$$

$$B = L = Bg + 2.(\textit{jarak tepi tiang ketepi poer}) \qquad \text{.....(3.211)}$$

dengan : Bg = Lg = panjang dari titik tiang ke titik terluar tiang lain

m = jumlah tiang pancang arah horizontal

n = jumlah tiang pancang arah vertikal

d = diameter tiang pancang

Apabila pengaturan tiang pada suatu poer telah mengikuti persyaratan, maka kapasitas daya dukung grup tiang tidak sama dengan kapasitas daya dukung satu tiang dikalikan denghan banyaknya tiang pada grup tiang tersebut. Kapasitas grup tiang didefenisikan sebagai perkalian

antara kapasitas dukung satu tiang dengan banyaknya tiang dan dikalikan lagi efisiensi grup tiang. Atau dapat dituliskan dengan rumus :

$$Q_{ug} = Q_{ult} \cdot n \cdot E_g \qquad \text{.....(3.212)}$$

$$Q_{ijin\,g} = \frac{Q_{ug}}{SF} \qquad \text{.....(3.213)}$$

Efisiensi grup tiang pancang dapat dihitung dengan menggunakan persamaaan Conversi – Labbare :

$$E_g = 1 - \theta \frac{(n-1)\,m + (m-1)\,n}{90 \cdot m \cdot n} \qquad \text{.....(3.214)}$$

$$\theta = arc\tan {}^{d}\!/_{s} \qquad \text{.....(3.215)}$$

dimana :

Q_{ug} = kapasitas daya dukung maksimum grup tiang

Q_{ult} = kapasitas daya dukung ultimit satu tiang

$Q_{ijin\,g}$ = kapasitas daya dukung ijin grup tiang

SF = faktor keamanan

Eg = efisiensi grup tiang

n = banyaknya tiang pancang dalam baris

m = banyaknya baris dalam tiang

d = diameter dari tiang

s = jarak antar tiang

Untuk mencari kapasitas dukung kelompok tiang digunakan 2 cara yaitu :

1. Kapasitas dukung individual tiang dengan rumus :

$$\sum Q_{ui} = m \cdot n \left(9 \cdot Ap \cdot Cu + \sum \alpha \cdot Ap \cdot Cu \cdot L\right) \text{.....(3.216)}$$

2. Kapasitas kelompok tiang berdasarkan blok

$$\boxed{\sum Q_{ub} = Lg \cdot Bg \cdot Cu \cdot Nc^{*} + \sum 2 \cdot (Lg + Bg) \cdot Cu \cdot L \text{ .....(3.217)}}$$

dengan : Ap = keliling tiang

Cu = kohesi tanah

α = faktor adhesi, dapat dilihat pada tabel :

Kondisi tanah	Faktor adhesi
Pasir atau kerikil berpasir yang terletak di atas tanah kohesif	1.25

Lempung lembek atas lumpur yang terletak di atas tanah kohesif mulai dari yang keras sampai dengan yang sangat keras	0.40
tanah – tanah kohesif dari yang keras sampai dengan yang sangat keras	0.40

Tabel 3.2 Faktor Adhesi

L = panjang tiang pancang

N_c^* = faktor daya dukung yang telah disesuaikan

Hasil dari perhitungan kedua rumus ditas diambil nilai Q_u terkecil. Untuk memperoleh daya dukung bersih tiang maka :

$$Q_{all} = \frac{Q_u}{SF} \quad (ton) \qquad \text{.....(3.218)}$$

dengan : Qu = kapasitas tahanan ultimit

SF = faktor keamanan

3.7.4 Perencanaan *Pile Cap*

Dalam perencanaan pondasi tiang, pile cap digunakan untuk menyatukan kelompok tiang pancang yang bekerja pada suatu kolom. Kolom yang dipakai dalam analisis ini adalah kolom dengan beban yang bekerja paling besar. Untuk gambar perencanaan pile cap dapat dilihat pada gambar 3.8 dibawah ini :

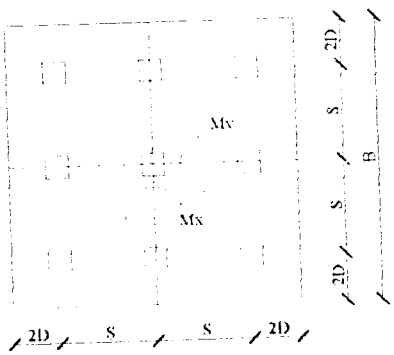

Gambar 3.8 Konfigurasi Kelompok Tiang Pancang

$$\sum X^2 = \sum\left(n.\ Xi^2\right) \qquad \text{.....(3.219)}$$

$$\sum Y^2 = \sum\left(n.\ Yi^2\right) \qquad \text{.....(3.220)}$$

Beban yang bekerja pada satu tiang :

$$P\max = \frac{\sum P}{n} \pm \frac{Mu,kX}{\sum X^2} \pm \frac{Mu,kY}{\sum Y^2} \qquad \text{.....(3.221)}$$

$$\sum P = Pu,k + Pile\ cap + Tanah\ Urug \qquad \text{.....(3.222)}$$

Dengan demikian gambar 3.9 menyajikan tentang reaksi tiang pancang akibat beban aksial dan momen

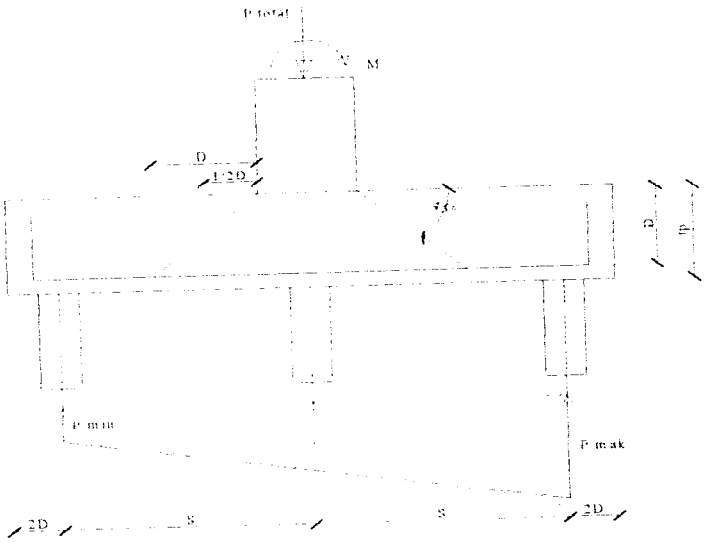

Gambar 3.9 Reaksi Tiang Pancang Akibat Beban Aksial dan Momen

Dengan : Σ P = beban vertikal yang ditahan oleh tiang pancang

$M_{u,kx}$ = momen kolom arah x

$M_{u,ky}$ = momen kolom arah y

X = jarak pusat tiang kepusat poer arah X

Y = jarak pusat tiang kepusat poer arah Y

Perencanaan tebal pile cap

$$D = tp - pb - \Phi\, tul \qquad \text{.....(3.223)}$$

dengan : tp = tebal pile cap

pb = selimut beton poer

Kontrol geser satu arah (geser lentur)

$$Vu = n.P_{max} \qquad \text{.....(3.224)}$$

$$Vc = \frac{1}{6}\sqrt{fc'}.B.D$$

$$\phi Vc \geq Vu \qquad \text{.....(3.225)}$$

dengan : Vu = gaya geser ultimit

Vc = gaya geser yang disumbangkan oleh beton

P_{max} = gaya maksimum dari tiang pancang

n = jumlah tiang pancang

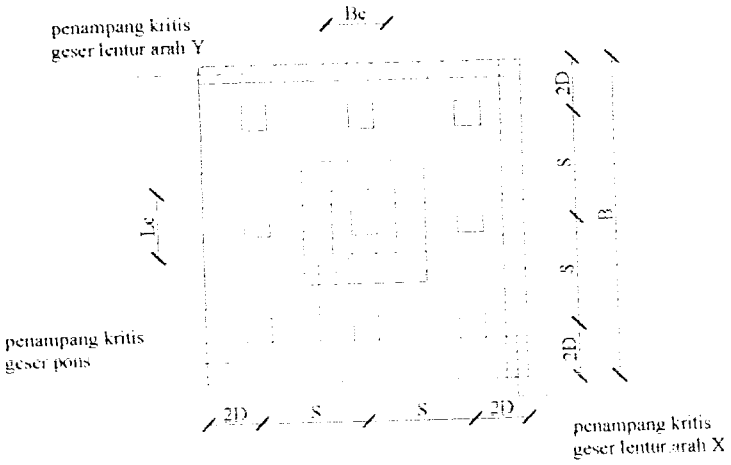

Gambar 3.10 Penampang Kritis Pile Cap Akibat Geser

Kontrol geser dua arah *(Geser Pons)*

Geser pons akibat beban kolom tidak terjadi dikarenakan garis geser terletak di luar poer. Penulangan lentur pile cap dapat dilihat pada gambar 3.11 di bawah ini:

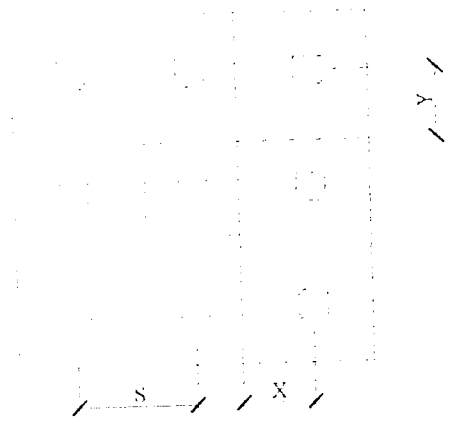

Gambar 3.11 Penampang Kritis *Pile Cap* Akibat Momen :

Persamaan – persamaan yang digunakan dalam geser dua arah :

$$Vui = \sum (n.p) \qquad \text{.....(3.226)}$$

$$Vc = \left[1 + \frac{2}{\beta 0}\right]\left[\frac{\sqrt{fc'}}{6}\right] bo\,D \leq 0.33.\sqrt{fc'}.bo.D \qquad \text{.....(3.227)}$$

$$\beta_0 = \frac{hc}{bc} \qquad \text{.....(3.228)}$$

$$b_0 = 2.((hc + D) + (bc + D)) \qquad \text{.....(3.229)}$$

dengan : V_{ui} = gaya geser pada sumbu yang ditinjau

Vc = gaya geser beton

βo = rasio sisi panjang dan sisi pendek kolom

Tinjauan terhadap momen lentur dapat menggunakan rumus :

$$M_u x = P_{max}.x \qquad \text{.....(3.230)}$$

$$d = tp - (pb + 0.5\ \text{ø tul}) \qquad \text{.....(3.231)}$$

dengan : Mu, x = momen ultimit arah x

Pmak = gaya maksimum tiang pancang

x = jarak dari pusat tiang kepusat poer

Sedangkan perencanaan penulangannya sebagai berikut :

$$\rho min = \frac{1.4}{fy}$$ .....(3.232)

$$\rho b = \frac{0.85\, fc'}{fy}\beta\left[\frac{600}{600+fy}\right]$$ .....(3.233)

$$\rho mak = 0.75 . \rho b$$ .....(3.234)

$$Rn = \frac{\frac{Mu}{\phi}}{b.d^2}$$ .....(3.235)

$$m = \frac{fy}{0.85\, fc'}$$ .....(3.236)

$$\rho\ perlu = \frac{1}{m}\left[1-\sqrt{1-\frac{2.Rn.m}{fy}}\right]$$ .....(3.237)

$$As\ perlu = \rho.b.d$$ .....(3.238)

jarak antar tulangan :

$$s \leq \frac{A\phi\, tul.b}{As\ perlu}$$ .....(3.239)

$$As\ ada = \frac{A\phi\, tul.b}{s}$$ .....(3.240)

cek kapasitas lentur :

$$a = \frac{As\ ada.fy}{0.85.fc'.b}$$ .....(3.241)

$$Mn = As\ ada.fy.\left(d-\frac{a}{2}\right)$$ .....(3.242)

dimana øMn ≥ Mu

8.8 Perencanaan Tangga

3.8.1 Perencanaan Dimensi Tangga

langkah-langkah perencanaan tangga adalah sebagai berikut :

1. menentukan lebar dan jumlah optrade dan antrade
   - tinggi bersih antar lantai (h) dalam meter dapat diketahui.
   - Lebar bordes (Lb) dalam meter dapat ditentukan, diambil ≥1,20 meter

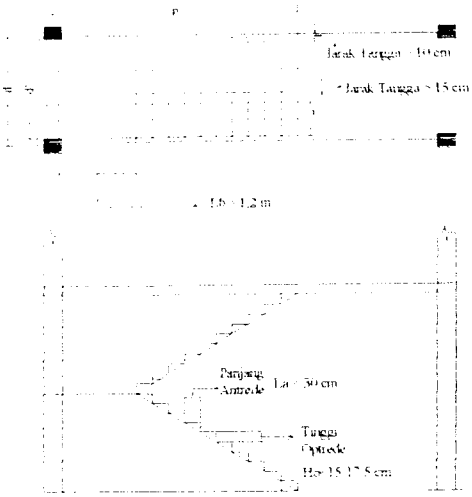

Gambar 3.8 Dimensi Tangga

3.8.2 Perencanaan tulangan tangga

Perencanaan tulangan pada tangga sama dengan perhitungan pada pelat lantai.

BAB IV

PERHITUNGAN KONSTRUKSI

4.1 Perencanaan Atap

Pada perencanaan ulang ini digunakan 3 macam rangka atap (kuda-kuda) yang direncanakan dengan menggunakan profil baja, di bawah ini gambar kuda - kuda

1. KK-1 $\alpha = 49°$ $\beta = 22°$

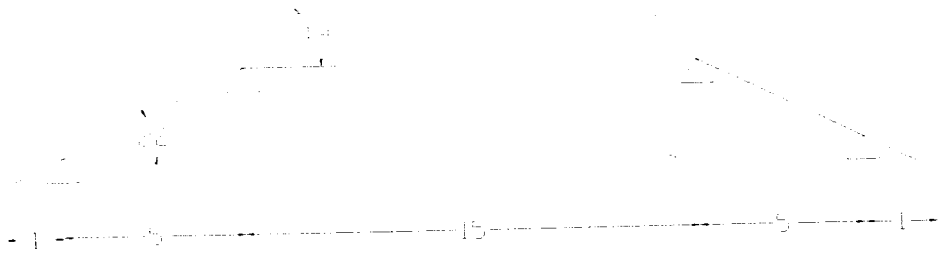

Gambar 4.1 Rencana Rangka KK-1

4.1.1 Perencanaan Gording Pada KK-1

1. Data-data

   Jarak antar kuda-kuda = 6,0 m

   Mutu baja Profil fy = 2400 kg/cm^2

Kuat tarik Fu = 3700 kg/cm^2

Sambungan dengan menggunakan las listrik dengan mutu sambungan setara dengan mutu baja propil

Gording dipakai baja jenis Light Lip Channel

Direncanakan terhadap bangunan di darat

2. Panjang batang

Struktur kuda – kuda baja dengan panjang batang sebagai berikut :

$\cos 49 = {}^{7.5}\!/_{r}$

r = 11.431 m

3. Jarak antar gording

Jarak antar gording = panjang batang / jumlah gording

$$\frac{11.431}{11} = 1.0392$$

Pembebanan Gording KK- 1a

A. Beban tetap

- Beban penutup atap = 10 x 2 x ½ x 1.0392 = 10.392 kg/m

  (genteng metal)

- Beban hidup = 20 x 2 x ½ x 1.0392 = 20.74 kg/m
- Berat gording (perkiraan) = 10,00 kg/m +

  = 41.132 kg/m

q⊥ = q cos α = 41.132 . cos 49° = 26.985 kg/m

q // = q sin α = 41.132 . sin 49° = 31.043 kg/m

B. Beban angin

Pada daerah daratan w = 25 kg/cm^2

- Angin tekan (wt) $\alpha < 65°$

  Diketahui sudut $\alpha = 49°$

  $C_1 = 0{,}02\ \alpha - 0{,}4 = 0{,}02 \cdot 49 - 0{,}4 = 0{,}58$

  Wt = C_1 . w . jarak gording = 0,58 . 25 . 1,0392 = 15,0684 kg/m

- Angin hisap (wh)

  $C_2 = -0{,}4$

  wh = C_2 . w . jarak gording = -0,4 . 25 . 1,0392 = -10.392 kg/m

C. Perhitungan momen

- Akibat beban tetap

  q ⊥ ; Mmaks = 1/8 . q ⊥ . b^2 = 1/8 . 26,985 .6^2 = 121,4325 kgm

  = 12143,25 kgcm

  q// ; Mmaks = 1/32 . q// . b^2 = 1/32. 31,043 .6^2 = 34,92 kgm

  = 3492 kgcm

  - Jika sagrod yang digunakan di tengah maka momen maximum = 1/32 . q// . b^2
  - Jika sagrod yang digunakan berada disepertiga panjang maka momen maximum = 1/90 . q// . b^2

- Akibat beban angin

  Mmaks = 1/8 . w. b^2 = 1/8 . 15,0684. 6^2 = 67,807 kgm

  = 6780,7 kgcm

D. Dimensi gording

Dicoba profil 125 x 50 x 20 x 3,2 (Light Lip Channel)

A = 7,807 cm^2 w = 6,13 kg/m < 10 kg/m

Ix = 137 cm^4 Sx = 21,9 cm^3

Iy = 20,6 cm^4 Sy = 6,22 cm^3

- Kontrol tegangan

$$\frac{fbx}{0,66Fy} + \frac{fby}{0,75Fy} \leq 1,0$$

$$fbx = \frac{M_{\perp}.max}{Sx} = \frac{12143,25}{21,9} = 554,486 \text{ kg/cm}^2$$

$$fby = \frac{M_{//}.max}{Sy} = \frac{3492}{6,22} = 561,414 \text{ kg/cm}^2$$

$$\frac{554,486}{0,66.2400} + \frac{561.414}{0,75.2400} = 0,662 \leq 1,0 \Rightarrow \text{ok!}$$

- Kontrol lendutan

$$\delta \perp = \frac{5}{384}\frac{q_{\perp}.L^4}{EIx} \leq \frac{L}{360}$$

$$= \frac{5}{384}.\frac{0,26985.600^4}{2,4.10^6.137} = 1,3849 \leq \frac{600}{360} = 1,667 \Rightarrow \text{ok!}$$

$$\delta // = \frac{5}{384}\frac{q_{//}.(L/(a+1))^4}{EIy} \leq \frac{L}{360}$$

$$= \frac{5}{384}.\frac{0,31043.(600/1+1))^4}{2,4.10^6.20,6} = 0,662 \leq \frac{600}{360} = 1,667 \Rightarrow \text{ok!}$$

Jadi profil C **125x50x20x3,2** dapat dipakai

E. Perencanaan sagrod dan tierod

- Beban sagrod

  - berat penutup atap x sisi miring = 10 .11.431

    = 114.31 kg/m

  - beban hidup x sisi miring = 20 . 11.431

    = 228,62 kg/m

  - jumlah gording satu sisi miring x berat gording= 11 . 6,13

    = 67,43 kg/m

  P = 114,31 + 228,62 + 67,43 = 410.36 kg/m

  P// = P . sin α . Ss = 410.36 sin 49° . 3 = 929.107 kg

- Dimensi sagrod

  $$\text{Asagrod} = \frac{P_{//}}{0.33 \cdot Fu} = \frac{1}{4} \cdot \pi \cdot D^2\text{sagrod}$$

  $$= \frac{929.107}{0.33 \cdot 3700} = \frac{1}{4} \cdot \pi \cdot D^2$$

  $$\text{Dsagrod} = \sqrt{\frac{(929.107 \cdot 4)}{(0,33 \cdot 3700 \cdot \pi)}} = 0,98 \text{ cm} \Rightarrow 10 \text{ mm}$$

  Dsagrod pakai = 10+3 = 13 mm

- Dimensi tierod

  Beban tierod; T = P//.cos 49° = 929.107. cos 49° = 609.55 kg

  $$\text{Atierod} = \frac{T}{0,33Fu} = \frac{1}{4} \cdot \pi \cdot D^2 tierod$$

Dtierod $= \sqrt{\dfrac{(609.55 \cdot 4)}{(0{,}33 \cdot 3700 \cdot \pi)}} = 0{,}797$ cm ≈ 8 mm

Dtierod pakai = 8 + 3 = 11 mm

4.1.2 Perencanaan kuda-kuda

L = 15 m $\alpha = 49°$

Pembebanan kuda kuda

Digunakan profil WF. 200 x 150 x 6 x 9 mm

Berat profil = 30.6 kg/m , panjang profil digunakan = 22.862 m

Berat total kuda – kuda = 29.6×22.862 = 699.57 kg

Berat kuda-kuda yang digunakan:

- Berat total kuda-kuda = 699.57 kg
- Berat plat sambung, las & baut = (5 % x berat total kuda-kuda)

  = 35 kg

Jumlah (Σ)= Berat total kuda-kuda + 5 % . Berat total kuda-kuda

= 699.57 + 35 = 734,5 kg

- Panjang rangka kuda-kuda, L = 15 m

$$\frac{\Sigma}{L} = \frac{734{,}5}{15} = 49 \text{ kg/m}$$

- Beban tetap

  - berat gording = 6.13 kg/m
  - berat eternit + penggantung = 18 kg/m^2
  - berat penutup atap = 10 kg/m^2
  - beban hidup = 20 kg/m^2
  - berat kuda-kuda = 49kg/m

Beban masing-masing joint

Perhitungan beban pada Program SAP 2000, berat sendiri kuda – kuda tidak diperhitungkan karena Program SAP 2000 menghitung secara otomatis berat sendiri kuda – kuda. Karena data pembebanan di bawah ini akan diinputkan ke program SAP 2000 maka berat sendiri kuda – kuda tidak diperhitungkan.

- P1 = P21

Berat gording = 6.13 x 6.0	= 36,78 kg
Berat penutup atap = 10 x 6.0 x ½ x 1.0392	= 31,176 kg
Berat eternit + plafond = 18 x 6 x ½ x 1.0392	= 56,116 kg
Beban mati	= 124,072 kg
	= 1,24 KN
Beban hidup = 20 x ½ x 1.0392	= 10,392 kg
	= 0,1 KN

- P2 – P20

Berat gording = 6.13 x 6.0	= 36,78kg
Berat penutup atap = 10 x 6.0 x 1.0392	= 62,352 kg
Berat eternit + plafond = 18 x 6 x 1.0392	= 112,232 kg
Beban mati	= 211,364 kg
	= 2,11 KN
Beban hidup = 20 x 1.0392	= 20,784 kg
	= 0,2 KN

- Beban angin

Muatan angin di darat = 25 kg/m^2

Koefisien angin menurut peraturan pembebanan untuk gedung 1983.

untuk $\alpha < 65°$. Diketahui $\alpha = 49°$

Tekan = C1 = 0.02 .α - 0,4 = 0.58

Tarik = C2 = -0,4

Beban yang bekerja

Wt = C1 x w = 0,58 x 25 = 14,5 kg/m^2

Wh = C2 x w = -0,4 x 25 = -10 kg/m^2

- Sisi kiri

W_1, W_{11}	= 14,5 x ½ x 1,0392 x 6.0	= 45,205 kg
$W_2 - W_{10}$	= 14,5 x 1,0392 x 6,0	= 90,41 kg

- Sisi kanan

W_{11}, W_{21}	= 10 x ½ x 1,0392 x 6.0	= 31,176 kg
$W_{12} - W_{20}$	= 10 x 1,0392 x 6.0	= 62,352 kg

Syarat :

- *30 % beban tetap + beban angin (angin kanan + angin kiri)*

  → *Beban rencana = beban tetap*

- *30 % beban tetap + beban angin (angin kanan + angin kiri)*

  → *Beban rencana = beban tetap + beban angin*

4.1.3 Perencanaan Dukungan Arah lateral

Diketahui :

Lb = jarak antar gording = 1,04 m

Direncanakan dukungan pada jarak 2 Lb = 2,08 m

Lc = jarak antar kuda-kuda = 6 m

$$L = \sqrt{2Lb^2 + Lc^2} = \sqrt{2{,}08^2 + 6^2} = 6{,}3 \text{ m}$$

Syarat $L/r \leq 300$, $\longrightarrow$ $r\ min \geq \dfrac{L}{300} = \dfrac{630}{300} = 2{,}1$ cm

Keterangan :

- $L \leq 3$ m → dipakai baja tulangan ∅ 12 mm
- $L \geq 3$ m → dipakai baja tulangan ∅ 19 mm
- 3 m < $L \leq 5$ m → dipakai baja tulangan ∅ 16 mm

L > 5 m maka digunakan baja tulangan ∅ 19 mm

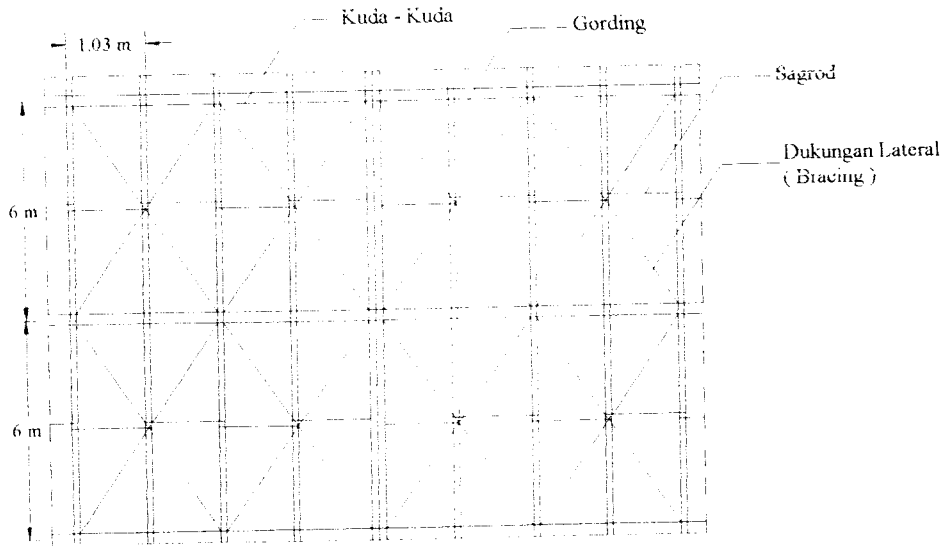

Gambar 4.2 Tampak Atas Rencana Atap

4.1.4 Perencanaan Dimensi batang

- Perencanaan Rafter (batang utama)

Panjang batang = 11,431 m

Jarak antar gording = 1,0392 m

Fy = 2400 kg/cm^2 Fu = 3700 kg/cm^2

Dari perhitungan menggunakan program SAP 2000 didapat :

P maks = 39,88 KN

M maks = 27,63 KN m

S yang dibutuhkan = $\frac{M}{Fb} = \frac{27{,}63 \times 100 \times 100}{0{,}66.2400} = 174{,}43 cm^3$

Dicoba profil WF 200 x 150 x 6 x 9 , dari daftar pofil didapat :

Sx = 277 cm^3 ≥ 174,43 cm^3

A = 39,01 cm^2 ; tw = 6 mm

bf = 200 mm ; rx = 8,30 cm

d = 150 mm ; ry = 3,61 cm

tf = 9 mm ; Lb = 2,08 m (2 kali jarak gording)

dukungan lateral 2 kali jarak antar gording, maka Lb = 2,08 m

$$fa = \frac{P}{A} = \frac{39{,}88 \times 100}{37{,}66} = 105{,}89\ Kg/cm^2 = 1{,}53 \text{ ksi}$$

$$fb = \frac{M}{Sx} = \frac{27{,}63 \times 100 \times 100}{277} = 997{,}47\ Kg/cm^2 = 14{,}46 \text{ ksi}$$

Kontrol profil WF bagian sayap dan badan dengan rumus AISC

$$\frac{L}{bf} \leq \frac{76}{\sqrt{Fy}}$$

$$\frac{L}{bf} = \frac{2080}{200} = 10{,}4 \leq \frac{76}{\sqrt{36}} = 12{,}66 \qquad \textit{ok}$$

$$\frac{bf}{2tf} \leq \frac{65}{\sqrt{Fy}}$$

$$\frac{200}{2.9} = 10{,}5 \leq \frac{65}{\sqrt{36}} = 10{,}8 \qquad \textit{ok}$$

$$\frac{d}{tw} \leq \frac{640}{\sqrt{Fy}}\left(1 - 3{,}47\frac{fa}{Fy}\right) \geq \frac{257}{\sqrt{Fy}}$$

$$\frac{150}{6} \leq \frac{640}{\sqrt{36}}\left(1 - 3{,}47\frac{1{,}53}{36}\right) \geq \frac{257}{\sqrt{36}}$$

$25 < 90{,}9 > 42{,}8$ ***ok***

Lx = 1143,1 cm ; $(KL/r)x = \frac{1143{,}1}{8{,}30} = 137{,}72$ (menentukan)

Ly = 208 cm ; $(KL/r)y = \frac{208}{3{,}61} = 57{,}64$

$$Cc = \frac{6400}{\sqrt{Fy}} = \frac{6400}{\sqrt{2400}} = 130{,}64$$

Kontrol kelangsingan :

$\frac{KL}{r} \geq Cc = \frac{6400}{\sqrt{Fy}}$ (Fy dalam Kg/cm^2) , maka

$$Fa = \frac{12}{23} \cdot \frac{\pi^2 E}{(KL/r)^2} = \frac{12}{23} \cdot \frac{\pi^2 \; 2{,}1.10^6}{137{,}73^2} = 570{,}05 \text{ kg/cm}^2$$

Lc = 6,4 ft = 1,95 m

Lu = 20,1 ft = 6,12 m (tabel A.3 Charles G. Salmon)

Lb = 2,08 > Lc = 1,95

Lb = 2,08 < Lc = 6,12

Fb = 0.6 Fy = 0.66 x 2400 = 1440 kg/cm^2

C_m = 1 dianggap dukungan sederhana (tabel 12.10.1 Charles G. Salmon)

$$F'e = \frac{12}{23} \cdot \frac{\pi^2 E}{(KL/r)^2} = \frac{12}{23} \cdot \frac{\pi^2 \; 2{,}1.10^6}{137{,}73^2} = 570{,}05 \text{ kg/cm}^2$$

$$\frac{fa}{Fa} + \frac{fb_x}{Fb_x} \cdot \frac{C_m}{1 - \frac{fa}{F'_e}} \leq 1$$

$$\frac{105{,}89}{570{,}05} + \frac{997{,}47}{1548} \cdot \frac{1}{1 - 105{,}89/570{,}05} = 0{,}185 + 0{,}644.1{,}22 = 0{,}97 < 1 \quad \textbf{\textit{OK}}$$

Profil WF 200 x 150 x 6 x 9 mm dapat dipakai

- **Perencanaan Batang Sekunder**

Panjang batang = 6,47 m

Jarak antar gording = 1,078 m

Fy = 2400 kg/cm^2 Fu = 3700 kg/cm^2

Dari perhitungan menggunakan program SAP 2000 didapat :

P maks = 3,44 KN

M maks = 16,75 KN m

$$S \text{ yang dibutuhkan} = \frac{M}{Fb} = \frac{16{,}75 \times 100 \times 100}{0{,}66.2400} = 105{,}75 \; cm^3$$

Dicoba profil WF 148 x 100 x 6 x 9 , dari daftar pofil didapat :

Sx = 138 cm^3 ≥ 105,75 cm^3

A = 26,84 cm^2 ; tw = 6 mm

bf = 148 mm ; rx = 6,17 cm

d = 100 mm ; ry = 2,37 cm

tf = 9 mm

dukungan lateral 2 kali jarak antar gording, maka Lb = 2,16 m

$$fa = \frac{P}{A} = \frac{3{,}44 \times 100}{26{,}84} = 12{,}82\ Kg/cm^2 = 0{,}185 \text{ ksi}$$

$$fb = \frac{M}{Sx} = \frac{16{,}75 \times 100 \times 100}{138} = 1213{,}76\ Kg/cm^2 = 17{,}65 \text{ ksi}$$

Kontrol profil WF bagian sayap dan badan dengan rumus AISC

$$\frac{L}{bf} \leq \frac{76}{\sqrt{Fy}}$$

$$\frac{L}{bf} = \frac{2160}{200} = 10{,}8 \leq \frac{76}{\sqrt{36}} = 12{,}66 \qquad \textbf{\textit{ok}}$$

$$\frac{bf}{2tf} \leq \frac{65}{\sqrt{Fy}}$$

$$\frac{148}{2.9} = 8{,}2 \leq \frac{65}{\sqrt{36}} = 10{,}8 \qquad \textbf{\textit{ok}}$$

$$\frac{d}{tw} \leq \frac{640}{\sqrt{Fy}}\left(1 - 3{,}47\frac{fa}{Fy}\right) \geq \frac{257}{\sqrt{Fy}}$$

$$\frac{100}{6} \leq \frac{640}{\sqrt{36}}\left(1 - 3{,}47\frac{0{,}185}{36}\right) \geq \frac{257}{\sqrt{36}}$$

16,6 < 104,76 > 42,8 **ok**

Lx = 647 cm ; $(KL/r)x = \frac{647}{6{,}17} = 104{,}86$

Ly = 107,8 cm ; $(KL/r)y = \frac{107{,}8}{2{,}37} = 45{,}48$

$$Cc = \frac{6400}{\sqrt{Fy}} = \frac{6400}{\sqrt{2400}} = 130.64$$

Kontrol kelangsingan :

$$\frac{KL}{r} \leq Cc = \frac{6400}{\sqrt{Fy}}$$ (Fy dalam Kg/cm^2) , maka

$$Fa = \frac{\left(1 - \frac{(KL/r)^2}{2\,Cc^2}\right) Fy}{\frac{5}{3} + \frac{3\,(KL/r)}{8\,Cc} - \frac{(KL/r)^3}{8\,Cc^3}}$$

$$Fa = \frac{\left(1 - \frac{(104{,}86)^2}{2 \times 130{,}64^2}\right) 2400}{\frac{5}{3} + \frac{3\,(104{,}86)}{8 \times 130{,}64} - \frac{(104{,}86)^3}{8 \times 130{,}64^3}} = \frac{1626{,}87}{1{,}67 + 0{,}30 - 0{,}06}$$

Fa = 851,73 kg/cm^2

Lc = 5,3 ft = 1,61 m

Lu = 16,6 ft = 5,06 m (tabel A.3 Charles G. Salmon)

Lb = 2,08 > Lc = 1,61

Lb = 2,08 < Lu = 5,06

Fb = 0,6 Fy = 0,66 x 2400 = 1440 kg/cm^2

$$F'e = \frac{12}{23} \cdot \frac{\pi^2 E}{(KL/r)^2} = \frac{12}{23} \cdot \frac{\pi^2\ 2{,}1.10^6}{104{,}86^2} = 983{,}45\ kg/cm^2$$

C_m = 1 dianggap dukungan sederhana (tabel 12.10.1 Charles G. Salmon)

$$\frac{fa}{Fa} + \frac{fb}{Fb} \cdot \frac{C_m}{1 - fa/F'_e} \leq 1$$

$$\frac{12{,}82}{851{,}73} + \frac{1213{,}76}{1440} \cdot \frac{1}{1 - 12{,}82/983{,}45} = 0{,}015 + 0{,}843.1{,}01 = 0{,}869 < 1 \quad \textbf{\textit{OK}}$$

Profil WF 148 x 100 x 6 x 9 mm dapai dipakai

4.1.5 Perencanaan pelat kuda-kuda

P = 48,64 KN = 4864 kg

f'c = 22,5 Mpa = 225 kg/cm^2

$$\text{Aperlu} = \frac{P}{0{,}33.f'c} = \frac{48{,}64 \times 10^3}{0{,}33 \times 22{,}5} = 6550{,}8 \text{ mm}^2 = 65{,}2 \text{ cm}^2$$

Diambil ukuran pelat : 20 x 30 = 600 cm^2> Aperlu

$$q = \frac{P}{BxL} = \frac{4864}{20x30} = 8{,}10 \text{ kg/cm}^2$$

$$x = \frac{30-15}{2} = 7{,}5 \text{ cm}$$

M = ½ q. x^2 = ½ x 8,10 x 7,5^2 = 227.8 kgcm

Syarat :

$$0{,}66 \text{ fy} = \frac{M}{1/6.1.tp^2}$$

$$\text{tp} = \sqrt{\frac{10 \times 227{,}8}{2400}} = 0{,}974 \text{ cm} \approx 1 \text{ cm}$$

Sehingga dipakai pelat dengan tebal 1 cm

Pelat kuda-kuda berukuran : **20 x 30 x 1**

4.1.6 Perencanaan Sambungan

Sambungan pada struktur kuda – kuda baja yang digunakan pada Proyek Pembangunan Pasar Rakyat Teluk Kuantan Tahap – 2 ini adalah gabungan antara sambungan baut dan sambungan las. Untuk pelat penyambung digunakan sambungan las yang dilakukan di pabrik, dan untuk penyambungan utama digunakan baut dengan menggunakan baut mutu A325 D 19 mm

Diketahui :

profil WF 200 x 150 x 6 x 9 ; Bj 36 ksi

Sambungan terletak di puncak kuda – kuda dan digunakan baut A325

M = 27,63 KNm ; Sx = 277 cm^3

D = 14,81 KN ; $F'_{t\ A325}$ = 44 ksi = 303 mpa

P = 39,9 KN ; $F_{v\ A325}$ = 30 ksi = 206 mpa

A Pofil = 39,01 cm^2 ;

momen puncak kuda – kuda dapat dilihat pada gambar berikut ini :

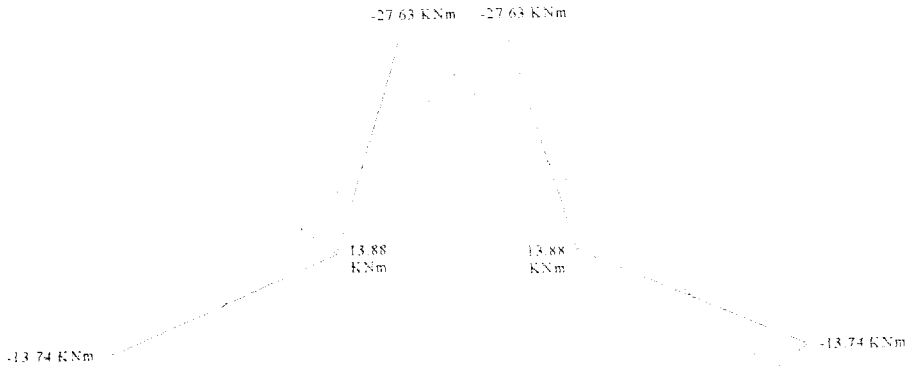

Gambar 4.3 Bidang momen pada puncak kuda – kuda

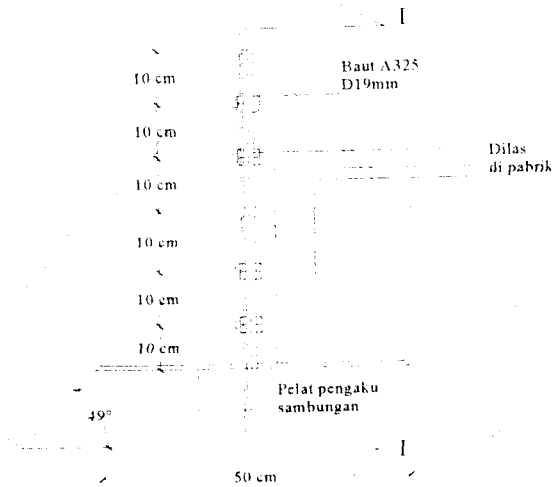

Gambar 4.4 Sambungan Pada Puncak Kuda – kuda

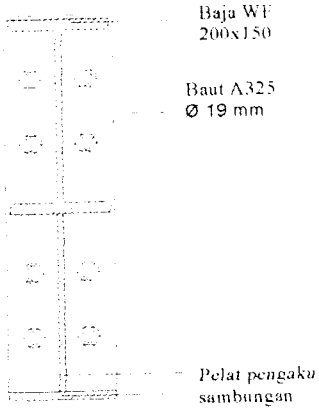

Gambar 4.5 Pot I – I Sambungan Pada Puncak Kuda – kuda

$$f_{tb} = \frac{6M}{b.d^2} = \frac{6.27{,}63.10^6}{150.600^2} = 3{,}07\ mpa$$

reduksi tegangan tarik terhadap baut terluar (baut paling bawah)

$$f_{tb} = 3{,}07.\frac{200}{300} = 2{,}05\ mpa$$

gaya tarik dua baut yang paling besar (baut bawah)

$$T = f_{tb}\ .bp = 2{,}05.150.100 = 30750\ N$$

tegangan baut nominal ke dua baut paling bawah

$$f_t = \frac{T}{A_b} = \frac{30750}{2(\frac{\pi}{4}.19^2)} = 54{,}22\ mpa$$

komponen geser langsung

$$f_v = \frac{P}{\sum A} = \frac{39{,}9.10^3}{8.(\frac{\pi}{4}.19^2)} = 17{,}6\ mpa$$

Cek tegangan tarik ijin bila digabungkan dengan geser (tabel 4.10.1 Charles G. Salmon)

$$F'_t \leq 379 - 1{,}8\ f_v \leq 303$$

$F'_t = 379 - 1{,}8.17{,}6 = 347{,}3 > 303$

$F'_t = 303$ mpa $> f_t = 54{,}22$ mpa

8 baut A_{325} Ø 19 mm dapat digunakan

4.2 Perencanaan Pelat Lantai dan Pelat Talang Beton

4.2.1 Perencanaan Pelat Lantai

Pada Proyek Pembangunan Pasar Rakyat di Teluk Kuantan terdapat beberapa kondisi tepi pelat, dan dapat dilihat pada gambar :

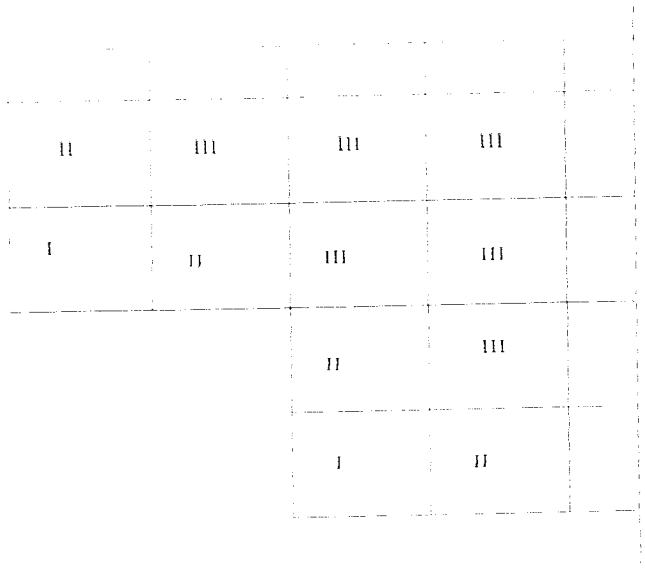

Gambar 4.6 Beberapa Kondisi Tepi Pelat Lantai

4.2.1.1 Pembebanan Pelat Lantai

- fungsi bangunan : Pasar / Toserba (qL) = 2,5 KN/m^2
- spesifikasi bahan : mutu beton (f'c) = 22,5 Mpa

  mutu baja (fy) = 240 Mpa

- Perhitungan beban :

  Tebal pelat lantai (h) = 120 mm

  - Beban mati

    - Berat pelat beton = 0,12 . 24 = 2,88 KN/m^2
    - Berat pasir (5cm) = 0,05 . 18 = 0,90 KN/m^2
    - Berat spesi (3cm) = 0,03 . 21 = 0,63 KN/m^2

- Berat keramik (1cm) = 0,01 . 24 = 0,24 KN/m^2
- Perkiraan beban akibat partisi = 2,00 KN/m^2 +

qD = 6.65 KN/m^2

- Beban hidup (qL) : qL = 2,5 KN/m^2

qu = 1,2.qD + 1,6.qL = 1,2 . 6,65 + 1,6 . 2,5 = 11,98 KN/m^2

- Menghitung distribusi momen

Contoh perhitungan pada panel III

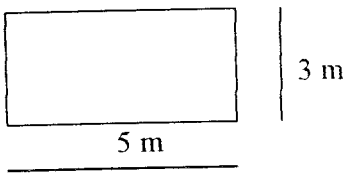

ly = 5 m

lx = 3 m

ly/lx =1,667

Dari tabel 13.3.2.PBI 1971 (tumpuan tepi dianggap jepit elastis)

Didapat : clx = 58,7 ctx = 58,7

cly = 36 cty = 36

Mulx = 0,001.qu.lx^2.clx = 0,001 11,98. 3^2 . 58.7 = 6,32 KNm

Mutx = -0,001.qu.lx^2.ctx = -0,001 11,98. 3^2 . 58.7 = -6,32 KNm

Muly = 0,001.qu.lx^2.cly = 0,001 11,98. 3^2 . 36 = 3,88 KNm

Muty = -0,001.qu.lx^2.cty = -0,001 11,98. 3^2 . 36 = -3,88 KNm

4.2.1.2 Perhitungan Tulangan Pelat Lantai

- Perencanaan tulangan lx = tx

h = 120 mm

d = h – pb – ½ Ø tul tx = 120 – 20 – ½ 8 = 96 mm

Mu = 6,32 KNm

Mu/∅ = 6,2 /0,8 = 7,9 KNm

$$Rn = \frac{Mu./\phi}{b.d^2} = \frac{7,9\ .10^6}{1000.96^2} = 0,85 \text{ Mpa}$$

$$m = \frac{fy}{0,85.f'c} = \frac{240}{0,85.22,5} = 12,549$$

$$\rho_{perlu} = \frac{1}{m}\cdot\left(1-\sqrt{1-\frac{2\cdot m\cdot Rn}{fy}}\right) = \frac{1}{12,549}\cdot\left(1-\sqrt{1-\frac{2\ .12,549.\ 0,85}{240}}\right)$$

$$= 0,00365 \quad < \quad \rho_{min} = \frac{1,4}{fy} = \frac{1,4}{240} = 0,00583$$

$$\rho_b = \frac{0,85\cdot f'c}{Fy}\cdot\beta\cdot\left(\frac{600}{600+Fy}\right) = \frac{0,85\cdot 22,5}{22,5}\cdot 0,85\cdot\left(\frac{600}{600+240}\right) = 0,048$$

$$\rho_{maks} = 0,75\cdot\rho_b = 0,75\ .\ 0,048 = 0,036$$

1,33 ρ perlu = 1,33 . 0,00365 = 0,00486 < ρ min

ρ terpakai = 0,00486

As perlu = ρ terpakai.b.d = 0,00486. 1000 . 96 ≥ 0,002 . 1000.120

= 466.74 mm^2 ≥ 240 mm^2

As perlu pakai = 466,74 mm^2

Dipakai tulangan pokok ∅8 mm dengan A1∅ = 50 mm^2

Jarak tulangan : $s \leq \frac{A_1\cdot b}{As_{perlu}} = \frac{50.1000}{466.74}$

= 107,12 mm ≤ 2.h = 240 mm

≤ 250 mm

Dipakai jarak (s) = 100 mm

$$\text{As ada} = \frac{A_{1\phi} \cdot b}{s_{terpakai}} = \frac{50.1000}{100} = 500 \text{ mm}^2$$

Kontrol kapasitas momen (Mn) :

$$a = \frac{As_{ada} \cdot fy}{0{,}85 \cdot f'c \cdot b} = \frac{500 \,.\, 240}{0{,}85 \,.\, 22{,}5 \,.1000} = 6{,}27 \text{ mm}$$

$$Mn = As_{ada} \cdot fy \cdot \left(d - a/2\right) \geq 1{,}33\, Mu/\phi$$

$$= 500 \,.\, 240 \cdot \left(96 - 6{,}27/2\right) \geq 1{,}33 \,.\, 6{,}3125 \text{ KNm}$$

$$= 11{,}14 \text{ KNm} \geq 8{,}396 \text{ KNm}$$

⇒ Dipakai tulangan P8 – 100

- Perencanaan tulangan ly

h = 120 mm

d = h – pb – ∅tul lx – ½ ∅tul ly = 120 – 20 – 8 – 8/2 = 88 mm

Mu = 3,88KNm

Mu/∅ =3,88 /0,8 = 4.85 KNm

$$Rn = \frac{Mu./\phi}{b.d^2} = \frac{4{,}85 \,.\, 10^6}{1000 \,.\, 88^2} = 0{,}627 \text{ Mpa}$$

$$m = \frac{fy}{0{,}85.f'c} = \frac{240}{0{,}85 \,.\, 22{,}55} = 12{,}549$$

$$\rho_{perlu} = \frac{1}{m} \cdot \left(1 - \sqrt{1 - \frac{2 \cdot m \cdot Rn}{fy}}\right) = 0{,}0027 < \rho_{min} = \frac{1{,}4}{240} = 0{,}00583$$

$$\rho_b = \frac{0{,}85 \cdot f'c}{Fy} \cdot \beta \cdot \left(\frac{600}{600 + Fy}\right) = 0{,}048$$

$$\rho_{maks} = 0{,}75 \cdot \rho_b = 0{,}75 \,.\, 0{,}05376 = 0{,}036$$

1,33 ρ perlu = 1,33 . 0,0027 = 0,0035 < ρ min

ρ terpakai = 0,0035

As perlu = ρ terpakai.b.d = 0,0035 . 1000 .88 ≥ 0,002 . 1000.120

= 310,7 mm^2 ≥ 240 mm^2

As perlu pakai = 350 mm^2

Dipakai tulangan pokok ∅8 mm dengan A1∅ = 50,266 mm^2

Jarak tulangan : $s \leq \frac{A_1 \cdot b}{As_{perlu}}$ = 143 mm

≤ 2.h = 240 mm

≤ 250 mm

Dipakai jarak (s) = 140 mm

As ada = $\frac{A_{1\,\phi} \cdot b}{s_{terpakai}} = \frac{50{,}266.1000}{140}$ = 314 mm^2

Kontrol kapasitas momen (Mn) :

$$a = \frac{As_{ada} \cdot fy}{0{,}85 \cdot f'c \cdot b} = \frac{314\ .\ 240}{0{,}85\ .\ 22{,}55\ .\ 1000} = 4.51 \text{ mm}$$

$$Mn = As_{ada} \cdot fy \cdot \left(d - a/2\right) \geq 1{,}33\, Mu/\phi$$

= 7,39 KNm ≥ 6,45 KNm

⇒ **Dipakai tulangan P8 – 140**

- Perencanaan tulangan ty

h = 120 mm

d = h – pb – ½ ∅tul ty = 120 – 20 – ½ 8 = 96 mm

Mu = 3,88 KNm

Mu/∅ =3.88 /0,8 = 4,85 KNm

$$Rn = \frac{Mu./\phi}{b.d^2} = \frac{4,85\ .\ 10^6}{1000\ .\ 96^2} = 0,86 \text{ Mpa}$$

$$m = \frac{fy}{0,85.f'c} = \frac{240}{0,85\ .\ 22,55} = 12,549$$

$$\rho_{perlu} = \frac{1}{m}\cdot\left(1-\sqrt{1-\frac{2\cdot m\cdot Rn}{fy}}\right) = 0,0022 < \rho_{min} = \frac{1,4}{240} = 0,00583$$

$$\rho_b = \frac{0,85\cdot f'c}{Fy}\cdot\beta\cdot\left(\frac{600}{600+Fy}\right) = 0,048$$

$$\rho_{maks} = 0,75\cdot\rho_b = 0,75\ .\ 0,048 = 0,036$$

1,33 ρ perlu = 1,33 . 0,0022 = 0,0049

ρ terpakai = 0,0049

As perlu = ρ terpakai.b.d = 0,0049 . 1000 .96 ≥ 0,002 . 1000.120

= 284 mm^2 ≤ 240 mm^2

As perlu pakai = 300 mm^2

Dipakai tulangan pokok ∅8 mm dengan A1∅ = 50,266 mm^2

Jarak tulangan : $s \le \frac{A_1\cdot b}{As_{perlu}} = 167,6$ mm

≤ 2.h = 240 mm

≤ 250 mm

Dipakai jarak (s) = 160 mm

$$As\ ada = \frac{A_{1\phi}\cdot b}{s_{terpakai}} = 314 \text{ mm}^2$$

Kontrol kapasitas momen (Mn) :

$$a = \frac{As_{ada} \cdot fy}{0{,}85 \cdot f'c \cdot b} = \frac{314 \,.\, 240}{0{,}85 \,.\, 22{,}5 \,.\, 1000} = 3{,}94 \text{ mm}$$

$$Mn = As_{ada} \cdot fy \cdot \left(d - a/2\right) \geq 1{,}33 \, Mu/\phi$$

$$= 7{,}09 \text{KNm} \geq 6{,}45 \text{ KNm}$$

⇒ **Dipakai tulangan P8 – 160**

4.2.2 Perencanaan Talang Beton

Pada Proyek Pembangunan Pasar Rakyat di Teluk Kuantan menggunakan talang beton yang dapat dilihat seperti pada gambar :

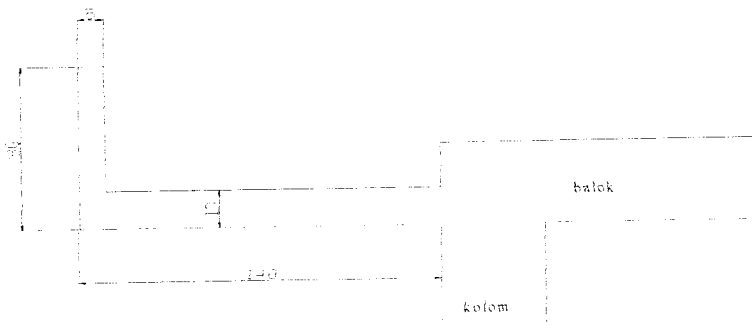

Gambar 4.7 Talang Beton

Tebal pelat, h = 10 mm

Berat lisplang (P_D) = 0.8 . 0.08 . 23 = 1,472 KN/m'

Beban hidup (P_L) = 1 KN/m'

Pu = 1.2 . P_D + 1.6 . P_L

= 1,2 . 1,472 + 1,6 . 1

= 3,366 KN/m'

Berat pelat (W_D) = 0,10 . 23 = 2,3 KN/m^2

W_L = 1 KN/m^2

W_U = 1,2 . 2,3 + 1,6 . 1

= 4,36 KN/m^2

Mu = $\frac{1}{2}$. 4,36 . 1,4^2 + 3,666 . 1,4 = 9,4 KNm/m'

$$Mn = \frac{Mu}{\phi} = \frac{9,4}{0,8} = 11,75 \text{ KNm/m'}$$

Digunakan tulangan P 8 mm, penutup beton = 15 mm

ds = Pb + ½ D = 15 + ½ . 8 = 19 mm

maka d = h – ds = 100 – 19 = 81 mm

$$Rn = \frac{Mn}{b \,.\, d^2} = \frac{11,75 \,.\, 10^6}{0,85 \,.\, 81^2} = 2,106 \text{ Mpa}$$

$$m = \frac{fy}{0,85.f'c} = \frac{240}{0,85.22,5} = 12,549$$

$$\rho_{perlu} = \frac{1}{m}\cdot\left(1-\sqrt{1-\frac{2\cdot m\cdot Rn}{fy}}\right) = \frac{1}{12,549}\cdot\left(1-\sqrt{1-\frac{2\ .12,549.\ 2,106}{240}}\right)$$

$$= 0,0093 > \rho_{min} = \frac{1,4}{240} = 0,00583$$

$$\rho_b = \frac{0,85\cdot f'c}{Fy}\cdot\beta\cdot\left(\frac{600}{600+Fy}\right) = \frac{0,85\cdot 22,5}{22,5}\cdot 0,85\cdot\left(\frac{600}{600+240}\right) = 0,048$$

$$\rho_{maks} = 0,75\cdot\rho_b = 0,75 \,.\, 0,048 = 0,036$$

ρ pakai = 0.0093

Luas tulangan pokok As = ρ. b. d = 0,0093 . 1000 . 81 = 753,3 mm^2

$$s \leq \frac{50 \,.\, 1000}{753.3} = 66{,}37 \text{ mm}$$

Dipakai tulangan P8 – 60

Luas tulangan susut Asst = 0,002 b.h = 0,002.1000.100 = 200 mm^2

$$s \leq \frac{50 \,.\, 1000}{200} = 250 \text{ mm}$$

Dipakai tulangan P8 – 200

Cek geser :

Vu = 4,36 . 1,4 + 3,366 = 9,47 KN

$$\phi Vu = 0.6\left[\tfrac{1}{6}\sqrt{fc'} \,.\, bw.d\right] = 0{,}6\left[\tfrac{1}{6}\ \sqrt{22{,}5}\ \ 1000.81\right] = 38421 \text{ N}$$

$$= 38{,}42 \text{ KN} > \text{Vu} = 9.47 \quad \text{ok}$$

4.3 Perencanaan Struktur dengan daktilitas penuh

Pada perencanaan ulang gedung Pasar Rakyat Teluk Kuantan Tahap – 2 ini, perencanaan portal dianalisis dengan SAP2000 dengan analisis struktur tiga (3) Dimensi. Gaya geser dasar horizontal akibat gempa dipengaruhi oleh berat total dari keseluruhan struktur yang direncanakan ditambah dengan beban hidup yang bakerja. Sesuai fungsi penggunaan gedung yaitu sebagai gedung pasar / toserba, maka menurut Peraturan Pembebanan Indonesia 1983 (Tabel 3.3) untuk perencanaan beban gempa, beban hidup direduksi sebesar 0,8. Adapun perhitungan gaya geser dasar horizontal total akibat gempa adalah sebagai berikut :

4.3.1 Berat total bangunan

Perhitungan berat bangunan pada blok B

(gambar dapat dilihat pada lampiran)

Tabel 4.1 Perhitungan Berat Bangunan

Lantai	Elemen	b (m) (a)	h (m) (b)	l (m) (c)	Faktor berat (KN)... (d)	Faktor reduksi (e)	Total beban (KN) (a)x(b)x(c)x(d)x(e)
L. Dasar							
	B. Mati						
	Sloof	0.4	0.6	391	24	1	2,252.16
	Kolom	0.4	0.4	116	24	1	445.44
	Dinding	1	2	122	2.5	1	610.00
Total beban (Wt1)							**3,307.60**
Lt 1							
	B. Mati						
	pelat	25	0.12	36	24	1	2,592.00
	balok	0.3	0.43	216	24	1	668.74
		0.3	0.33	175	24	1	415.80
		0.25	0.18	125	24	1	135.00
	kolom	0.4	0.4	168	24	1	645.12
	dinding	1	4	121	2.5	1	1,210.00
	keramik	25	0.01	36	24	1	216.00
	spesi	25	0.03	36	21	1	567.00
	pasir	25	0.05	36	18	1	810.00
	penggantung	25	1	36	0.18	1	162.00
	B. Hidup	25	1	36	2.5	0.8	1,800.00
Total beban (Wt2)							**9,221.66**
Lt 2							
	B. Mati						

	B. Mati					
	ring balk	0.2	0.33	70	24	1	110.88
		0.2	0.23	144	24	1	158.98
	kolom	0.3	0.3	47.25	24	1	102.06
	dinding	1	1.2	122	2.5	1	366.00
	penggantung	15	1	36	0.18	1	97.20
	kuda2 (WF200)	1	1	160	0.306	1	48.96
	(WF 148)	1	1	90.58	0.211	1	19.11
	gording	1	1	1364	0.0613	1	83.61
	atap	35.8	1	36	0.1	1	128.88
	B. Hidup	35.8	1	36	0.2	0.8	206.21
Total beban (Wt5)							**1,489.09**
W. TOTAL							**32,219.26**

W total = **Wt1 + Wt2 + Wt3 + Wt4 + Wt5**

= 32.219,26 KN

4.3.2 Waktu getar bangunan

$Tx = Ty = 0{,}06\ H^{(3/4)} = 0{,}06\ .\ 16.5^{(3/4)} = 0{,}491$ dt

4.3.3 Koefisien getar bangunan

$Tx = Ty = 0{,}491$ dt; Zona 5 dan jenis tanah lunak → C = 0,03

4.3.4 Faktor keutamaan I dan faktor jenis struktur K

I = 1,0 K = 1,0

4.3.5 Gaya geser horizontal akibat gempa

$Vx = Vy = C.I.K.Wt = 0{,}03\ .\ 1{,}0\ .\ 1{,}0\ .\ 32.219{,}26$

= 966.577 KN

4.3.6 Distribusi gaya horizontal akibat gempa ke sepanjang tinggi gedung

a. Arah x

H/A = 15.78 / 25 = 0.631 < 3,0

b. Arah y

H/A = 15.78 / 36 = 0.438 < 3,0

Tabel 4.2 Distribusi Gaya Geser Dasar Horizontal Total Akibat Gempa

Lantai	Hi (m)	Wi (KN)	Wi.Hi (KNm)	$F_i = \frac{W_i.H_i}{\sum W_i.H_i} \cdot V$	Untuk Tiap Portal	
					1/7. Fi x (KN)	1/6 Fiy (KN)
5	15.78	1,489.09	23,497.84	85.63	12.23	14.27
4	13.35	9,159.26	122,276.12	445.62	63.66	74.27
3	9.35	9,041.66	84,539.52	308.09	44.01	51.35
2	5.35	9,221.66	49,335.88	179.80	25.69	29.97
1	1.35	3,307.60	4,465.26	16.27	2.32	2.71
			260,616.78			

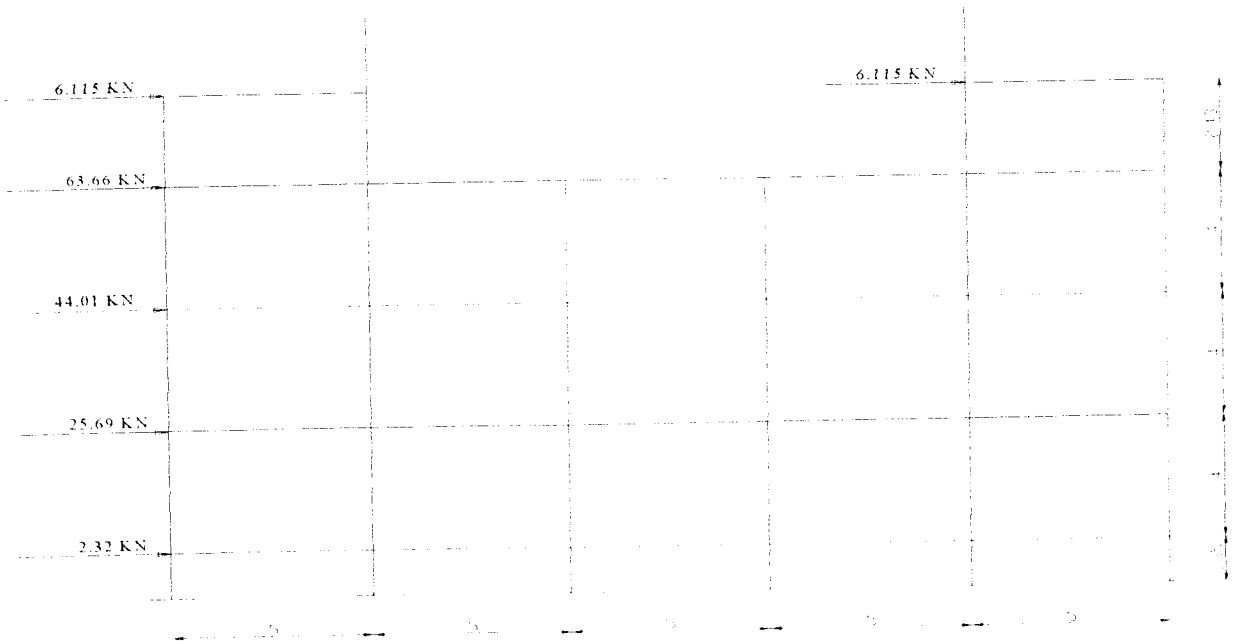

Gambar 4.8 Beban Gempa Arah – X Pada Portal A

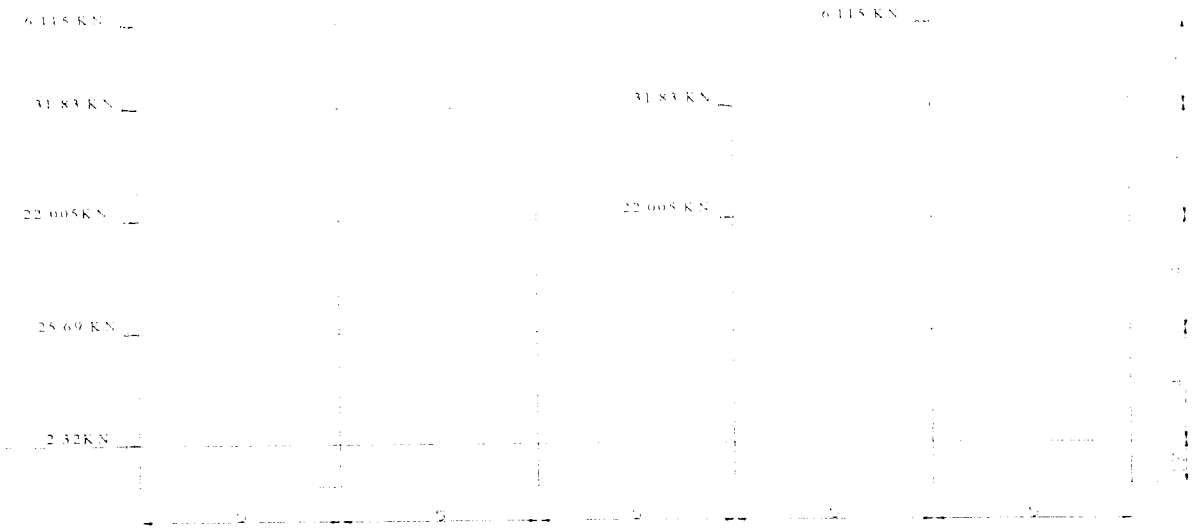

Gambar 4.9 Beban Gempa Arah – X Pada Portal B

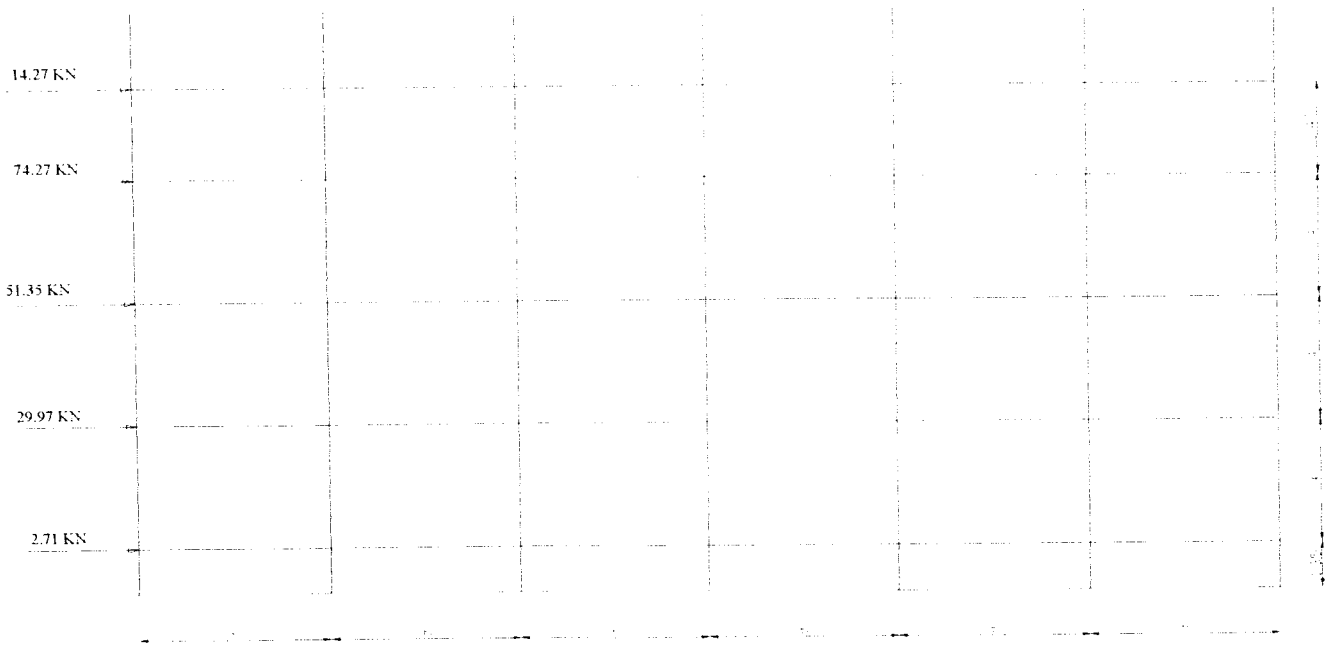

Gambar 4.10 Beban Gempa Arah – Y Pada Portal 12

4.4 Desain Balok

4.4.1 Desain Balok Anak

Untuk momen rencana balok diambil yang terbesar dari hasil kombinasi beban sebagai berikut:

1. $1{,}2\ M_D + 1{,}6\ M_L$
2. $1{,}05\ (M_D + 0{,}9\ M_L \pm M_E)$

4.4.1.1 Desain Tulangan Lentur

Berikut ini contoh hitungan balok anak pada batang – 192

- f'c = 22,5 Mpa
- fy deform = 360 Mpa
- tul pokok = 16 mm
- tulangan sengkang = 10 mm

$\longrightarrow$ untuk f'c ≤ 30 Mpa ⇒ $\beta_1 = 0{,}85$

f'c > 30 Mpa ⇒ $\beta_1 = 0{,}85 - 0{,}008\ (f'c - 30) \geq 0{,}65$

A. Tulangan Tumpuan

Mu = 74,14 KNm (-)

$$Mu/\phi = \frac{74{,}14}{0{,}8} = 92{,}67 \text{ KNm}$$

Dimensi rencana balok anak $250/400$, maka :

Tinggi efektif balok ($d_{diketahui}$) = $h_{diketahui}$ – Pb - $Ø_{sengkang}$ - ½ $Ø_{tul.rencana}$

d = 400 – 40 – 10 – ½ 16 = 340 mm

$$\rho b = \frac{0{,}85.f'c}{fy}.\beta_1\left(\frac{600}{600+fy}\right) = \frac{0{,}85.22{,}5}{360}.0{,}85\left(\frac{600}{600+360}\right) = 0{,}0282$$

$\rho_{maks} = 0,75 \cdot \rho b = 0,75 \cdot 0,0282 = 0,0212$

$$\rho_{min} = \frac{1,4}{fy} = \frac{1,4}{360} = 0,0039$$

$\rho_{pakai} = 0,5 \cdot \rho_{maks} = 0,5 \cdot 0,0212 = 0,0106$

$$m = \frac{fy}{0,85.f'c} = \frac{360}{0,85.22,5} = 18.82$$

$Rn = \rho\ fy\ (1 - \frac{1}{2}\rho\ m) = 0,0106 \cdot 360\ (1 - \frac{1}{2} \cdot 0,0106 \cdot 18,82) = 3,431$ MPa

$$b.d^2 = \frac{Mu/\phi}{Rn}$$

$d_{perlu} = \sqrt{\frac{Mu/\phi}{Rn.b}} = \sqrt{\frac{92,67.10^6}{3,431.250}} = 328,7$ mm < d = 340 mm, maka dipakai tulangan sebelah

$$Rn_{ada} = \frac{Mu/\phi}{b.d^2_{ada}} = \frac{92,67.10^6}{250.340^2} = 3,2 \text{ MPa}$$

$$\rho_{ada} = \frac{Rn_{ada}}{Rn}\rho = \frac{3,2}{3,431}0,0106 = 0,0098 > \rho_{min} = 0,0039$$

$\rho_{pakai} = 0,0098$

$As = \rho_{ada}.b.d_{ada} = 0,0098.\ 250 \cdot 340 = 833\ mm^2$

Dipakai diameter tulangan D16, maka : $A_1Ø = 201\ mm^2$

$$n = \frac{As}{A_1\phi} = \frac{833}{201} = 4,1 \text{ batang}$$

Dipakai tulangan memanjang **5D16**, maka :

$As_{ada} = 5 \cdot 201 = 1005\ mm^2 > As = 833\ mm^2$

Jarak bersih antar tulangan = $\dfrac{b - 2.Pb - 2.\phi\ sengkang - n.\phi\ tul.}{(n-1)}$

$= \dfrac{250 - 2.40 - 2.10 - 5.16}{(5-1)}$

= 17,5 mm < 25 mm maka dipakai tulangan dua lapis

Kontrol Kapasitas Lentur yang terjadi :

a $= \dfrac{As_{ada}\,fy}{0{,}85.f'c\ b} = \dfrac{1005\ .360}{0{,}85.22{,}5.250} = 75{,}67$ mm

$Mn = As_{ada} \cdot fy \cdot \left(d - a/2\right) \geq Mu/\phi$

$= 1005\ .\ 360\ (\ 340 - \dfrac{63{,}02}{2}\ )\ 10^{-6} = 92{,}95$ KNm

$= 1009{,}32$ KNm > $Mu/\phi = 92{,}67$ KNm (Ok!)

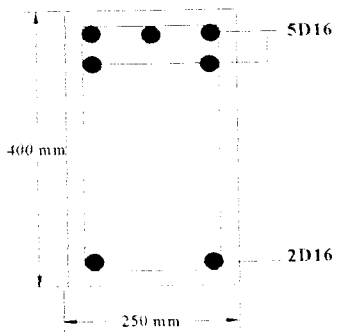

Gambar 4.11 Tulangan Tumpuan Balok Anak Frame 192

B. Tulangan Lapangan

Mu = 46,32 KNm

$Mu/\phi = \dfrac{46{,}32}{0{,}8} = 57{,}9$ KNm

Tinggi efektif balok ($d_{diketahui}$) = $h_{diketahui}$ – Pb - $Ø_{sengkang}$ - ½ $Ø_{tul.rencana}$

d = 400 – 40 – 10 – ½ 16 = 340 mm

$$\rho b = \frac{0{,}85.f'c}{fy}.\beta_1\left(\frac{600}{600+fy}\right) = \frac{0.85.22{,}5}{360}.0{,}85\left(\frac{600}{600+360}\right) = 0{,}0282$$

ρ_{maks} = 0,75 . ρb = 0,75 . 0,0282 = 0,0212

$$\rho_{min} = \frac{1{,}4}{fy} = \frac{1{,}4}{360} = 0{,}0039$$

ρ_{pakai} = 0,5 . ρ_{maks} = 0,5 . 0,0212 = 0,0106

$$m = \frac{fy}{0{,}85.f'c} = \frac{360}{0{,}85.22{,}5} = 18{,}82$$

Rn = ρ fy (1 – ½ρ m) = 0,0106 . 360 (1 - ½ . 0,0106 . 18,82) = 3,431 MPa

$$b.d^2 = \frac{Mu/\phi}{Rn}$$

$$d_{perlu} = \sqrt{\frac{Mu/\phi}{Rn.b}} = \sqrt{\frac{57{,}9\ .10^6}{3{,}431.250}} = 259{,}8 \text{ mm} < d = 340 \text{ mm}$$, maka dipakai

tulangan sebelah

$$Rn_{ada} = \frac{Mu/\phi}{b.d^2_{ada}} = \frac{57{,}9.\ 10^6}{250.340^2} = 2{,}00 \text{ MPa}$$

$$\rho_{ada} = \frac{Rn_{ada}}{Rn}\rho = \frac{2{,}00}{3{,}431}0{,}0106 = 0{,}0061 > \rho_{min} = 0{,}0039$$

ρ_{pakai} = 0,0061

As = ρ_{ada} .b.d_{ada} = 0,0061. 250 . 340 = 519mm^2

Dipakai diameter tulangan D16, maka : $A_1Ø$ = 201 mm^2

$$n = \frac{As}{A_1\phi} = \frac{519}{201} = 2{,}5 \text{ batang}$$

Dipakai tulangan memanjang **3D16**, maka :

$As_{ada} = 3 \,.\, 201 = 603 \text{ mm}^2 > As = 518 \text{ mm}^2$

Kontrol Kapasitas Lentur yang terjadi :

$$a = \frac{As_{ada}\, fy}{0{,}85.f'c\, b} = \frac{603\,.360}{0{,}85.22{,}5.250} = 45{,}40 \text{ mm}$$

$$Mn = As_{ada} \cdot fy \cdot \left(d - a/2\right) \geq Mu/\phi$$

$$= 603 \,.\, 360 \,(\, 340 - \frac{45{,}40}{2} \,)\, 10^{-6} = 68{,}88 \text{ KNm}$$

$$= 68{,}88 \text{ KNm} > Mu/\phi = 57{,}9 \text{ KNm} \qquad \text{(Ok!)}$$

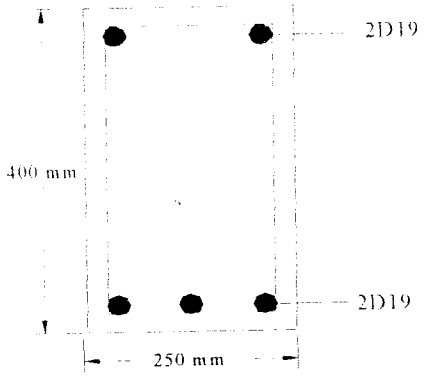

Gambar 4.12 Tulangan Lapangan Frame192

4.4.1.2 Perencanaan Tulangan Geser Balok

- **Gaya Geser Dukungan**

  Vu dukungan = 74,25 KN

  maka $Vu/\phi = \frac{74{,}25}{0{,}6} = 123{,}75$ KN

- **Gaya Geser Tengah Bentang**

Vu tengah bentang = 5,95KN

maka $Vu/\phi = \dfrac{5,95}{0,6} = 9,91KN$

Tegangan Geser Beton (Vc) :

$$Vc = \left(\frac{1}{6}\sqrt{fc'}\right).b.d = \left(\frac{1}{6}\sqrt{22,5}\right).250.342 = 67593\ N = 67,59\ KN$$

$Vu/\phi = 123,75 > Vc = 67,59$, maka perlu tulangan geser.

$$Vs_{min} = \tfrac{1}{3}.b.d = \tfrac{1}{3}\ .\ 250\ .\ 342.\ 10^{-3} = 28,5\ KN$$

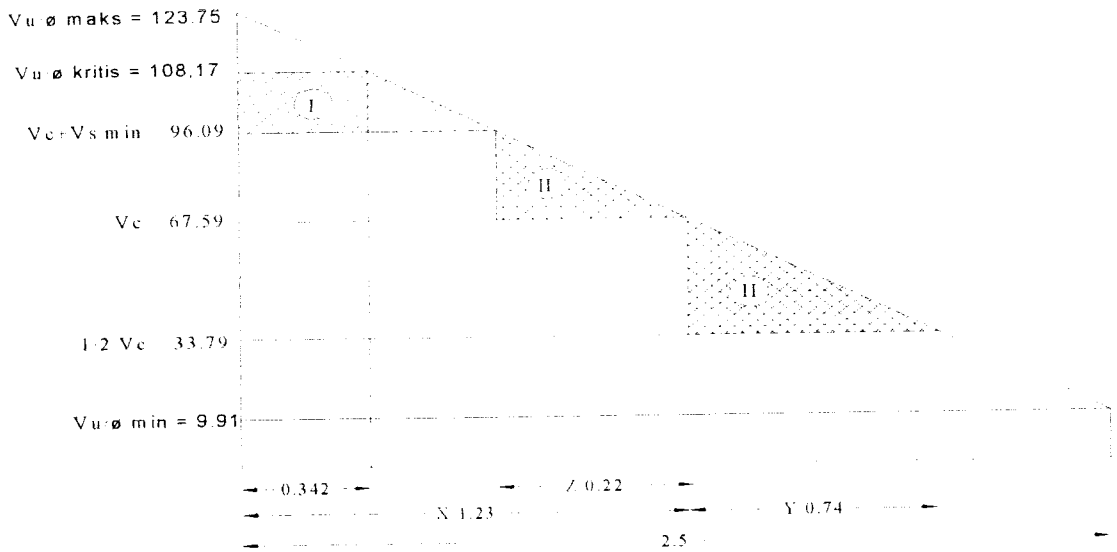

Gambar 4.13 Diagram Tegangan Geser Balok Anak

$$Vu/\phi\, kritis = \frac{((2,5-0.342)(123,75-9,91))}{2,5} + 9,91 = 108,17\ KN$$

$$x = \frac{(123,75-67,59).2,5}{123,75-9,91} = 1,23\ m$$

$$y = \frac{(67{,}59 - 33{,}8).2{,}5}{123{,}75 - 9{,}91} = 0{,}74 \text{ m}$$

$$z = \frac{9{,}91 \,.\, 1{,}23}{123{,}75 - 67{,}59} = 0{,}22 \text{ m}$$

Daerah I :

$(Vc + Vs_{min}) = 96{,}09 < Vu/\phi_{\ kritis} = 108{,}17 < 3\ Vc = 202{,}77$ KN

Digunakan sengkang Ø P10 mm, maka : $Av = 2 \,.\, \frac{1}{4} \,.\, \pi \,.\, 10^2 = 157 \text{ mm}^2$

Jarak sengkang :

$$s \leq \frac{Av.fy.d}{Vu/\phi - Vc} = \frac{157.240.340}{123{,}75 - 67{,}59} \,.\, 10^{-3} = 229 \text{ mm}$$

$$\leq d/2 = 340/2 = 170 \text{ mm}$$

$$\leq 600 \text{ mm}$$

Jadi dipakai tulangan sengkang **P10 – 170 mm**

Daerah II :

$Vu/\phi = Vc + Vs_{\ min} = 96{,}09$ KN

Digunakan sengkang Ø P10 mm, maka : $Av = 2 \,.\, \frac{1}{4} \,.\, \pi \,.\, 10^2 = 157 \text{ mm}^2$

$$s \leq \frac{Av.fy.d}{Vs_{min}} = \frac{157.240.340}{28{,}5} \,.\, 10^{-3} = 452 \text{ mm}$$

$$\leq d/2 = 340/2 = 170 \text{ mm}$$

$$\leq 600 \text{ mm}$$

Jadi dipakai tulangan sengkang **P10 – 170 mm**

4.4.2 Desain Balok Induk

4.4.2.1 Portal Arah – X

Berikut ini contoh perhitungan balok BI portal – X as A (bentang 7 - 8) lantai 1

A. Tulangan Tumpuan

Momen tumpuan diambil yang paling besar dari semua kombinasi, dan momen yang digunakan adalah yang terbesar dari kedua tumpuan (kiri & kanan)

Dipakai dimensi rencana 300/400

fc' = 22,5 Mpa fy = 360 Mpa

- Tulangan tumpuan momen negatif

Mu = 96.74 Nm (-)

$$\frac{Mu}{\phi} = \frac{96,74}{0,8} = 120,93 \text{ KNm}$$

$$\rho b = \frac{0,85.f'c}{fy}.\beta_1\left(\frac{600}{600+fy}\right) = \frac{0,85.22,5}{360}.0,85\left(\frac{600}{600+360}\right) = 0,0282$$

$$\rho_{maks} = 0,75 \,.\, \rho b = 0,75 \,.\, 0,0282 = 0,0212$$

$$\rho_{min} = \frac{1,4}{fy} = \frac{1,4}{360} = 0,0039$$

$$\rho_{pakai} = 0,5 \,.\, \rho_{maks} = 0,5 \,.\, 0,0212 = 0,0106$$

$$m = \frac{fy}{0,85.f'c} = \frac{360}{0,85.22,5} = 18.82$$

$$Rn = \rho\, fy\,(1 - \tfrac{1}{2}\rho\, m) = 0,0106 \,.\, 350\,(1 - \tfrac{1}{2} \,.\, 0,0106 \,.\, 18,82) = 3,431 \text{ MPa}$$

$$d = 400 - 40 - 10 - \tfrac{1}{2}\, 19 = 340 \text{ mm}$$

$$d_{perlu} = \sqrt{\frac{Mu/\phi}{Rn.b}} = \sqrt{\frac{120{,}93\ .\ 10^6}{3{,}431\ .\ 300}} = 342.76 \text{ mm} > d_{perlu} = 340 \text{ mm}$$

maka dipakai tulangan rangkap

$As1 = \rho_1 \ .\ b\ .\ d_{diketahui}$

$As1 = 0{,}0106.300.340 = 1081{,}2 \text{ mm}^2$

Dipakai tulangan Ø19 dengan A1Ø = 284 mm^2

$$\text{jumlah tulangan (n)} = \frac{As}{A1\phi} = \frac{1081{,}2}{284} = 3{,}4 \text{ batang}$$

dipakai **4D19**, maka $As_{ada} = 2\ .\ 284 = 1136 \text{ mm}^2 > As$

$$a = \frac{As1.fy}{0{,}85.fc'.b} = \frac{1081{,}2\ .\ 360}{0{,}85.22{,}5.300} = 67{,}84 \text{ mm}$$

$$Mn_1 = As_1 \cdot fy \cdot \left(d_{diketahui} - a/2\right) < Mu/\phi$$

$$Mn_1 = 1081{,}2.360.\ (\ 340 - 67{,}84/2\ ).10^{-6} = 119{,}14 \text{ KNm}$$

$$< Mu/\phi = 120{,}93 \text{ KNm}$$

$$Mn_2 = Mu/\phi - Mn1$$

$$Mn_2 = 120{,}93 - 119{,}14 = 1{,}79 \text{ KNm}$$

$$fs' = 600 \cdot \left\{1 - \frac{0{,}85 \cdot f'c \cdot \beta_1}{(\rho - \rho') \cdot fy} \cdot \frac{d'}{d_{diketahui}}\right\} \leq fy$$

$$fs' = 600 \cdot \left\{1 - \frac{0{,}85 \cdot 22{,}5 \cdot 0{,}85}{0.0106 \cdot 360} \cdot \frac{60}{340}\right\} = 148{,}9 \text{ Mpa} \leq 360 \text{ Mpa}$$

$$As' = \frac{Mn_2}{fs' \cdot \left(d_{diketahui} - d'\right)}$$

$$As' = \frac{1{,}79.10^6}{148{,}9 \cdot (340-60)} = 42{,}93 \text{ mm}^2$$

Dipakai tulangan Ø19 dengan A1Ø = 284 mm^2

jumlah tulangan (n') = $\frac{As'}{A1\phi} = \frac{42{,}93}{284}$ = 0,15 batang

dipakai **2D19**, maka As_{ada} = 2 . 284 = 568 mm^2 > As'

As = As1 + As' = 1136 + 568 =1704 mm^2

Kontrol kapasitas lentur

$$\rho = \frac{As}{b \cdot d_{diketahui}}$$

$$\rho = \frac{1704}{300 \cdot 340} = 0.0167$$

$$\rho' = \frac{As'}{b \cdot d_{diketahui}}$$

$$\rho' = \frac{568}{300.340} = 0.0055$$

$$fs' = 600 \cdot \left\{1 - \frac{0{,}85 \cdot 22{,}5 \cdot 0{,}85}{(0.0167 - 0.0055) \cdot 360} \cdot \frac{60}{340}\right\} = 173{,}10 \text{ Mpa} \leq 360 \text{ Mpa}$$

$$a = \frac{As \cdot fy - As' \cdot fs'}{0{,}85 \cdot f'c \cdot b} = \frac{1704 \cdot 360 - 568 \cdot 173{,}10}{0{,}85 \cdot 22{,}5 \cdot 300} = 89{,}78 \text{ mm}$$

$$Mn = (As \cdot fy - As' \cdot fs') \cdot \left(d_{diketahui} - a/2\right) + (As' \cdot fs') \cdot (d_{diketahui} - d')$$

$$Mn = (1704 \cdot 360 - 568 \cdot 173{,}10) \cdot \left(340 - 89{,}78/2\right) + (568 \cdot 173{,}10) \cdot (340 - 60)$$

$$Mn = 179{,}5 \text{ KNm} > Mu/\phi = 120{,}93 \text{ KNm} \quad \text{-OK-}$$

$$\text{Jarak bersih antar tulangan} = \frac{b - 2.Pb - 2.\phi\ sengkang - n.\phi\ tul.}{(n-1)}$$

$$= \frac{300 - 2.40 - 2.10 - 4.19}{(4-1)}$$

= 41 mm > 25 mm, maka dipakai tulangan 1 lapis

- Tulangan tumpuan momen positif

Dikarenakan koefisien gempa dasar lokasi proyek ini ada di wilayah 5 maka beban gempa yang terjadi terhadap proyek ini tidak terlalu besar, maka penggunaan momen positif tidak relevan lagi untuk digunakan pada perhitungan luas tulangan yang akan digunakan. Untuk menghitung tulangan yang digunakan pada bangunan tahan gempa SNI mengisyaratkan untuk mengambil nilai terbesar dari keterangan berikut :

1. Jumlah tulangan momen positif diambil ≥ 50 % jumlah tulangan momen negative pada tumpuan
2. Jumlah tulangan momen positif diambil ≥ 30 % jumlah tulangan momen positif pada lapangan.

Dikarenakan besarnya momen negative tumpuan dengan momen positif lapangan selisihnya tidak terlalu besar maka peraturan no 2 tidak perlu digunakan.

Maka jumlah tulangan tumpuan momen positif = 50% . jmlh tul tumpuan

= 50% . 4 tulangan D19 = 2 tulangan D19

Maka digunakan tulangan **2D19**

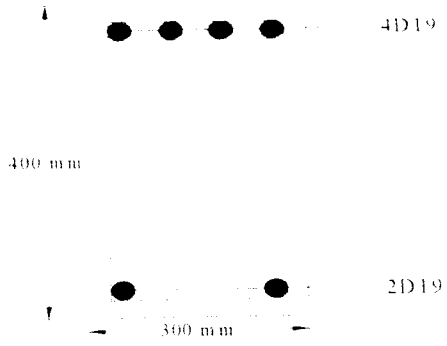

Gambar 4.14 Tulangan Tumpuan Balok Induk

B. Tulangan Lapangan

Mu = 41,21 KNm (+)

$$\frac{Mu}{\phi} = \frac{41,21}{0,8} = 51,51 \text{ KNm}$$

$$\rho b = \frac{0,85.f'c}{fy}.\beta_1\left(\frac{600}{600+fy}\right) = \frac{0,85.22,5}{360}.0,85\left(\frac{600}{600+360}\right) = 0,0282$$

$$\rho_{maks} = 0,75 \,.\, \rho b = 0,75 \,.\, 0,0282 = 0,0212$$

$$\rho_{min} = \frac{1,4}{fy} = \frac{1,4}{360} = 0,0039$$

$$\rho_{pakai} = 0,5 \,.\, \rho_{maks} = 0,5 \,.\, 0,0212 = 0,0106$$

$$m = \frac{fy}{0,85.f'c} = \frac{360}{0,85.22,5} = 18.82$$

$$Rn = \rho\, fy\,(1 - \tfrac{1}{2}\rho\, m) = 0,0106 \,.\, 350\,(1 - \tfrac{1}{2} \,.\, 0,0106 \,.\, 18,82) = 3,431 \text{ Mpa}$$

$$d_{perlu} = \sqrt{\frac{Mu/\phi}{Rn.b}} = \sqrt{\frac{51,51 \,.\, 10^6}{3,431 \,.\, 300}} = 223,7 \text{ mm} < d_{perlu} = 340 \text{ mm},$$

maka dipakai tulangan sebelah.

$$Rn_{ada} = \frac{\frac{Mu}{\phi}}{b.d^2} = \frac{51{,}51.10^6}{300.340^2} = 1{,}48 \text{ Mpa}$$

$$\rho_{ada} = \frac{Rn_{ada}}{Rn}.\rho_{pakai} = \frac{1{,}48}{3{,}431}.0{,}0106 = 0{,}0046 > \rho_{min} = 0{,}0046$$

$$\rho_{ada} = \rho_{pakai} = 0{,}0046$$

$As_{perlu} = \rho_{ada}.b.d = 0{,}0039.300.340 = 469mm^2$

Dipakai tulangan Ø19 dengan A1Ø = 284 mm^2

$$\text{jumlah tulangan (n)} = \frac{As_{perlu}}{A1\phi} = \frac{469}{284} = 1{,}6 \text{ batang}$$

dipakai **2D19**, maka $As_{ada} = 2 . 284 = 568\ mm^2 > As_{perlu}$

Kontrol kapasitas momen nominal :

$$a = \frac{As_{ada}.fy}{0{,}85.fc'.b} = \frac{568 . 360}{0{,}85.22{,}5.300} = 35.63 \text{ mm}$$

$$Mn = As_{ada}.fy.(d - a/2)$$

$$= 568 . 360 . (340 - 35{,}63/2).10^{-6}$$

$$= 65{,}88 \text{ KNm} > Mu/\phi = 51{,}51 \text{ KNm} \rightarrow \text{OK!}$$

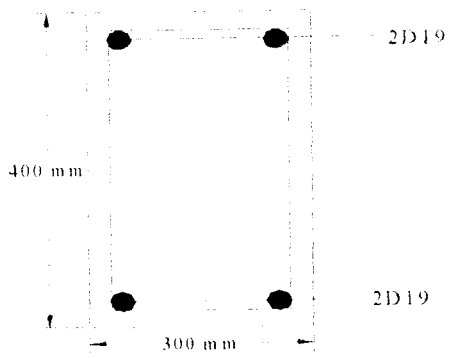

Gambar 4.15 Tulangan Lapangan Balok Induk

C. Momen Nominal Aktual Balok

1) Momen Aktual Balok Negatif Tumpuan kiri = kanan

tulangan atas = 4D19 dengan As_{ada} = 1136 mm^2

tulangan bawah = 2D19 dengan As_{ada} = 567 mm^2

$$\rho = \frac{As_{ada}}{b.d_{pakai}} = \frac{1136}{300.340} = 0{,}011$$

$$\rho' = \frac{As'_{ada}}{b.d_{pakai}} = \frac{567}{300.340} = 0{,}0055$$

$$\rho_1 = \rho - \rho' = 0{,}011 - 0{,}0055 = 0{,}0055$$

$$fs' = 600\left\{1 - \frac{0{,}85.f'c.\beta_1}{(\rho-\rho').fy}\frac{d'}{d}\right\} = 600\left\{1 - \frac{0{,}85.22{,}5.0{,}85}{0{,}0055.360}\frac{60}{340}\right\}$$

$$= 269{,}3 \text{ Mpa}$$

fs'< fy dipakai fs'= 269,3 Mpa

$$a = \frac{(As_{ada}.fy) - (As'_{ada}.fs')}{0{,}85.fc'.b} = \frac{(1136.360) - (567.269{,}3)}{0{,}85.22{,}5.300}$$

$$= 44{,}66 \text{ mm}^2$$

$$Mn_1 = (As_{ada}.fy - As'_{ada}.fs').(d - a/2)$$

$$= (1136.360 - 567.269{,}3).(340 - 44{,}66/2).10^{-6} = 81{,}41 \text{ KNm}$$

$$Mn_2 = (As'_{ada}.fs').(d - d') = (567.269{,}3).(340 - 100).10^{-6} = 36{,}64 \text{ KNm}$$

$$Mnak^- = Mn1 + Mn_2 = 81{,}41 + 36{,}64 = 118{,}05 \text{ KNm}$$

2) Momen Aktual Balok Positif

$$\rho_{aktual} = \frac{As_{ada}}{b.d_{pakai}} = \frac{567}{300.340} = 0{,}0055$$

$Rn = \rho.fy(1 - 1/2.\rho..m) = 0{,}0055.360.(1\text{-}1/2.\ 0{,}0055.18{,}82) = 1{,}87$ Mpa

$Mnak^{+} = Rn.b.d^2 = 1{,}87.300.340^2.10^{-6} = 64{,}85$ KNm

D. Perencanaan Tulangan Geser Balok

Adapun syarat penentuan gaya geser rencana balok adalah sebagai berikut:

$$Vu,b = 0{,}7\ \phi_0 \left[\frac{M_{nak,b} + M_{nak,b'}}{Ln}\right] + 1{,}05.Vg$$

Tetapi tidak lebih besar dari $Vu,b = 1{,}05\ (\ V_{D,b} + V_{L,b} + 4/k\ .V_{E,b}\ )$

$V_D = 53{,}31$ KN ; $V_L = 7{,}10$ KN ; $V_E = 18{,}40$ KN

$$Vu,b = 0{,}7\ \phi_0 \left[\frac{M_{nak,b} + M_{nak,b'}}{Ln}\right] + 1{,}05.Vg$$

$$Vu,b = 0{,}7.1{,}25\left[\frac{118{,}5 + 64{,}85}{5}\right] + 1{,}05(53{,}31 + 7{,}10) = 95{,}52\ \text{KN}$$

Dengan syarat tidak lebih besar dari :

$Vu,b = 1{,}05\ (53{,}31 + 7{,}10 + 4/1\ .\ 18{,}40\ ) = 140{,}71$ KN

$$Vu,b_{\ pakai} = \left[1{,}05Vg - 0{,}7\phi_0\left(\frac{Mnak,b + Mnak,b'}{Ln}\right)\right] +$$

$$\frac{Ln - d}{Ln}\left[Vu,b - \left[1{,}05Vg - 0{,}7\phi_0\left[\frac{Mnak,b + Mnak,b'}{Ln}\right]\right]\right]$$

$$= \left[63{,}43 - 0{,}7.1{,}25\left(\frac{118{,}5 + 64{,}85}{5}\right)\right] +$$

$$\frac{5 - 0{,}39}{5}\left[95{,}52 - \left[63{,}43 - 0{,}7.1{,}25\left[\frac{118{,}5 + 64{,}85}{5}\right]\right]\right]$$

$= 90{,}51$ KN

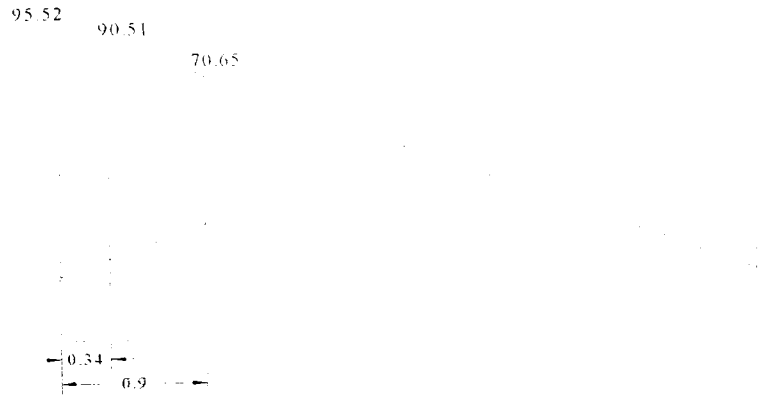

Gambar 4.16 Diagram Tegangan Geser Balok

1) dalam daerah sendi plastis

Vu,b untuk perencanaan di dalam daerah sendi plastis diambil sejauh d dari tumpuan, yaitu :

Vu,b = 90,51 KN

Vc = 0

$$\frac{Vu,b}{\phi} = \frac{90,51}{0,6} = 150,85 \text{ KN}$$

Digunakan sengkang Ø P10 mm, maka : Av = 2 . ¼ . π . 10^2 = 157 mm^2

Jarak sengkang :

$$s \leq \frac{Av.fy.d}{\frac{Vu,b}{\phi} - Vc} = \frac{157.240.340}{150,85 - 0} \cdot 10^{-3} = 84,92 \text{ mm}$$

$$\leq d/4 = 600/4 = 150 \text{ mm}$$

Jadi dipakai tulangan geser **P10 – 80 mm**

2) Diluar sendi plastis

Diambil jarak sejauh 2h = 2.400 = 800 mm

$$Vu,b = 90,51 - \frac{90,51.(0,8-0,34)}{(2,5-0,34)} = 71,23 \text{ KN}$$

$$Vc = 1/6.\sqrt{fc'}.b.d = 1/6.\sqrt{22,5}.300.340.10^{-3} = 80.64 \text{ KN}$$

$$Vs = \frac{Vu,b}{\phi} - Vc = \frac{71,23}{0,6} - 80,64 = 38,07 \text{ KN}$$

Digunakan sengkang P10 mm, maka : $Av = 2 . \frac{1}{4} . \pi . 10^2 = 157 \text{ mm}^2$

Jarak sengkang :

$$s \leq \frac{Av.fy.d}{Vs} = \frac{157.240.340}{38,07} . 10^{-3} = 336 \text{ mm}$$

$$\leq d/2 = 340/2 = 170 \text{ mm}$$

$$\leq 600 \text{ mm}$$

Jadi dipakai tulangan geser **P10 – 170 mm**

E. Perencanaan Tulangan Torsi

Tu = 1,39 KNm

$$\sum x^2.y = 300^2 . 350 = 31,5.10^6 \text{ mm}^3$$

Pada redisain ini komponen struktur portal merupakan komponen statis tak tentu. Untuk komponen statis tak tentu setelah terjadi retak akibat torsi, dalam rangka untuk mencapai keseimbangan terjadi redistribusi tegangan torsional yang mempengaruhi komponen lain yang bertemu pada satu titik buhul. Maka untuk menganalisis torsi dipakai torsi keserasian.

Kemampuan penampang beton menahan torsi untuk torsi keserasian :

$$Tu,b = \phi(\frac{1}{9}\sqrt{f'c}.\sum x^2.y = 0,6.(\frac{1}{9}\sqrt{22,5}.31,5.10^6$$

= 9,96 KNm > Tu = 1,39 KNm , tulangan torsi diabaikan.

4.4.2.2 Portal Arah – Y

Berikut ini contoh perhitungan balok BI portal – Y as 10 (bentang A - B) lantai 1

A. Tulangan Tumpuan

Momen tumpuan diambil yang paling besar dari semua kombinasi, dan momen yang digunakan adalah yang terbesar dari kedua tumpuan (kiri & kanan)

Dipakai dimensi rencana 350/550

fc' = 22,5 Mpa fy = 360 Mpa

- Tulangan tumpuan momen negatif

Mu = 195,34 Nm (-)

$$\frac{Mu}{\phi} = \frac{195,34}{0,8} = 244,2 \text{ KNm}$$

$$\rho b = \frac{0,85.f'c}{fy}.\beta_1\left(\frac{600}{600+fy}\right) = \frac{0,85.22,5}{360}.0,85\left(\frac{600}{600+360}\right) = 0,0282$$

$$\rho_{maks} = 0,75 \,.\, \rho b = 0,75 \,.\, 0,0282 = 0,0212$$

$$\rho_{min} = \frac{1,4}{fy} = \frac{1,4}{360} = 0,0039$$

$$\rho_{pakai} = 0,5 \,.\, \rho_{maks} = 0,5 \,.\, 0,0212 = 0,0106$$

$$m = \frac{fy}{0,85.f'c} = \frac{360}{0,85.22,5} = 18.82$$

Rn $= \rho\ fy\ (1 - \frac{1}{2}\rho\ m) = 0{,}0106\ .\ 350\ (1 - \frac{1}{2}\ .\ 0{,}0106\ .\ 18{,}82) = 3{,}431$ MPa

$$d_{perlu} = \sqrt{\frac{\frac{Mu}{\phi}}{Rn.b}} = \sqrt{\frac{244{,}2\ .\ 10^6}{3{,}431\ .\ 350}} = 451 \text{ mm}$$

$d_{ada} = h - d'$ ($d' = 100$ mm, diasumsikan menggunakan tulangan 2 lapis)

$= 550 - 100 = 450$ mm $> d_{perlu}$, maka dipakai tulangan rangkap

$As1 = \rho_1\ .\ b\ .\ d_{diketahui}$

$As1 = 0{,}0106.350.450 = 1670\ mm^2$

Dipakai tulangan Ø19 dengan A1Ø $= 284\ mm^2$

$$\text{jumlah tulangan (n)} = \frac{As}{A1\phi} = \frac{1670}{284} = 5{,}8 \text{ batang}$$

dipakai **6D19**, maka $As_{ada} = 6\ .\ 284 = 1704\ mm^2 > As$

$$a = \frac{As1.fy}{0{,}85.fc'.b} = \frac{1670\ .\ 360}{0{,}85.22{,}5.350} = 89{,}81 \text{ mm}$$

$$Mn_1 = As_1 \cdot fy \cdot \left(d_{diketahui} - \frac{a}{2}\right) < \frac{Mu}{\phi}$$

$$Mn_1 = 1670.360.\ (450 - \frac{89{,}81}{2})\ .10^{-6} = 243{,}54 \text{ KNm}$$

$$< \frac{Mu}{\phi} = 244{,}2 \text{ KNm}$$

$$Mn_2 = \frac{Mu}{\phi} - Mn1$$

$Mn_2 = 244{,}2 - 243{,}54 = 0{,}66$ KNm

$$fs' = 600 \cdot \left\{1 - \frac{0{,}85 \cdot f'c \cdot \beta_1}{(\rho - \rho') \cdot fy} \cdot \frac{d'}{d_{diketahui}}\right\} \leq fy$$

$$fs' = 600 \cdot \left\{1 - \frac{0{,}85 \cdot 22{,}5 \cdot 0{,}85}{0.0106 \cdot 360} \cdot \frac{60}{450}\right\} = 259{,}19 \text{ Mpa} \leq 360 \text{ Mpa}$$

$$As' = \frac{Mn_2}{fs' \cdot (d_{diketahui} - d')}$$

$$As' = \frac{0{,}66.10^6}{259{,}19 \cdot (450 - 60)} = 6{,}53 \text{ mm}^2$$

Dipakai tulangan Ø19 dengan A1O = 284 mm^2

jumlah tulangan (n') = $\frac{As'}{A1\phi} = \frac{6{,}53}{284}$ = 0,02 batang

dipakai **2D19**, maka As_{ada} = 2 . 284 = 568 mm^2 > As'

As = As1 + As' = 1704 + 568 =2272 mm^2

Kontrol kapasitas lentur

$$\rho = \frac{As}{b \cdot d_{diketahui}}$$

$$\rho = \frac{2272}{300 \cdot 450} = 0.0168$$

$$\rho' = \frac{As'}{b \cdot d_{diketahui}}$$

$$\rho' = \frac{568}{300.450} = 0.0042$$

$$fs' = 600 \cdot \left\{ 1 - \frac{0{,}85 \cdot 22{,}5 \cdot 0{,}85}{(0.0168 - 0.0042) \cdot 360} \cdot \frac{100}{450} \right\} = 122{,}15 \text{ Mpa} \leq 360 \text{ Mpa}$$

$$a = \frac{As \cdot fy - As' \cdot fs'}{0{,}85 \cdot f'c \cdot b} = \frac{2272 \cdot 360 - 568 \cdot 122{,}15}{0.85 \cdot 22.5 \cdot 350} = 111{,}82 \text{ mm}$$

$$Mn = (As \cdot fy - As' \cdot fs') \cdot \left(d_{diketahui} - a/2\right) + (As' \cdot fs') \cdot (d_{diketahui} - d')$$

$$Mn = (2272 \cdot 360 - 568 \cdot 122{,}15) \cdot \left(450 - 111{,}82/2\right) + (568 \cdot 122{,}15) \cdot (450 - 100)$$

Mn = 319,27 KNm > Mu/ϕ = 244,2 KNm -OK-

Jarak bersih antar tulangan = $\dfrac{b - 2.Pb - 2.\phi\ sengkang - n.\phi\ tul.}{(n-1)}$

$= \dfrac{350 - 2.50 - 2.10 - 6.19}{(6-1)}$

= 23,2 mm < 25 mm, maka dipakai tulangan 2 lapis

- Tulangan tumpuan momen positif

  jumlah tulangan tumpuan momen positif = 50% . jmlh tul tumpuan

  = 50% . 6 tulangan D19 = 3 tulangan D19

  Maka digunakan tulangan **3D19**

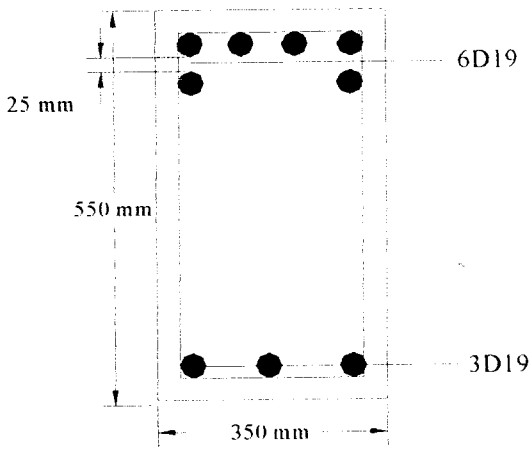

Gambar 4.17 Tulangan Tumpuan Balok Induk

B. Tulangan Lapangan

Mu = 152,6 KNm

$$\frac{Mu}{\phi} = \frac{152,6}{0,8} = 190,7 \text{ KNm}$$

$$\rho b = \frac{0{,}85.f'c}{fy}.\beta_1\left(\frac{600}{600+fy}\right) = \frac{0{,}85.22{,}5}{360}.0.85\left(\frac{600}{600+360}\right) = 0{,}0282$$

$\rho_{maks} = 0{,}75 \,.\, \rho b = 0{,}75 \,.\, 0{,}0282 = 0{,}0212$

$$\rho_{min} = \frac{1{,}4}{fy} = \frac{1{,}4}{360} = 0{,}0039$$

$\rho_{pakai} = 0{,}5 \,.\, \rho_{maks} = 0{,}5 \,.\, 0{,}0212 = 0{,}0106$

$$m = \frac{fy}{0{,}85.f'c} = \frac{360}{0{,}85.22{,}5} = 18.82$$

$Rn = \rho\, fy\,(1 - \tfrac{1}{2}\rho\, m) = 0{,}0106 \,.\, 350\,(1 - \tfrac{1}{2} \,.\, 0{,}0106 \,.\, 18{,}82) = 3{,}431$ MPa

$$d_{perlu} = \sqrt{\frac{Mu}{\phi}\Big/Rn.b} = \sqrt{\frac{190{,}7 \,.\, 10^6}{3{,}431 \,.\, 350}} = 399 \text{ mm}$$

$d_{ada} = h - d'$ (d' = 100 mm, diasumsikan menggunakan tulangan 2 lapis)

$= 550 - 100 = 450$ mm > d_{perlu} maka dipakai tulangan sebelah.

$$Rn_{ada} = \frac{Mu}{\phi}\Big/b.d^2 = \frac{190{,}7.10^6}{350.450^2} = 2{,}69 \text{ Mpa}$$

$$\rho_{ada} = \frac{Rn_{ada}}{Rn}.\rho_{pakai} = \frac{2{,}69}{3{,}431}.0{,}0106 = 0{,}0083 > \rho_{min} = 0{,}0039$$

$\rho_{pakai} = 0{,}0083$

$As_{perlu} = \rho_{ada}.b.d = 0{,}0083.350.450 = 1307{,}25 \text{ mm}^2$

Dipakai tulangan Ø19 dengan A1Ø = 284 mm^2

$$\text{jumlah tulangan (n)} = \frac{As_{perlu}}{A1\phi} = \frac{1307{,}25}{284} = 4{,}6 \text{ batang}$$

dipakai **5D19**, maka $As_{ada} = 5 \,.\, 284 = 1420 \text{ mm}^2 > As_{perlu}$

$$s = \frac{b - 2.Pb - 2.\phi\ sengkang - n.\phi\ tul.}{(n-1)}$$

$$= \frac{350 - 2.50 - 2.10 - 5.19}{(5-1)}$$

= 33,75 mm > 25 mm, maka dipakai tulangan 1 lapis

Kontrol kapasitas momen nominal :

$$a = \frac{As_{ada}.fy}{0{,}85.fc'.b} = \frac{1420\ .\ 360}{0{,}85.22{,}5.350} = 76{,}37\ mm$$

$$Mn = As_{ada}.fy.(d - a/2)$$

$$= 1420\ .\ 360\ .\ (\ 450 - 76{,}37/2\ ).10^{-6}$$

$$= 210{,}52\ KNm > Mu/\phi = 190{,}7\ KNm \rightarrow OK!$$

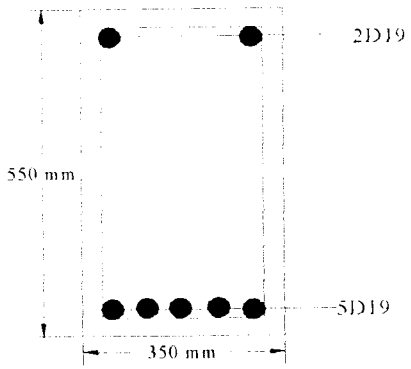

Gambar 4.18 Tulangan Lapangan Balok Induk

C. Momen Nominal Aktual Balok

1) Momen Aktual Balok Negatif Tumpuan kiri = kanan

tulangan atas = 6D19 dengan As_{ada} = 1704 mm^2

tulangan bawah = 3D19 dengan As_{ada} = 851 mm^2

$$\rho = \frac{As_{ada}}{b.d_{pakai}} = \frac{1704}{350.450} = 0{,}0108$$

$$\rho' = \frac{As'_{ada}}{b.d_{pakai}} = \frac{851}{350.450} = 0{,}0054$$

$$\rho_1 = \rho - \rho' = 0{,}0108 - 0{,}0054 = 0{,}0054$$

$$fs' = 600\left\{1 - \frac{0{,}85.f'c.\beta_1}{(\rho-\rho').fy}\frac{d'}{d}\right\} = 600\left\{1 - \frac{0{,}85.22{,}5.0{,}85}{0{,}0054.360}\frac{100}{450}\right\}$$

= 514,9 Mpa

fs'> fy dipakai fs'= 360 Mpa

$$a = \frac{(As_{ada}.fy) - (As'_{ada}.fs')}{0{,}85.fc'.b} = \frac{(1704.360) - (851.360)}{0{,}85.22{,}5.350}$$

= 45,87 mm^2

$$Mn_1 = (As_{ada}.fy - As'_{ada}.fs').(d - a/2)$$

$$= (1704.360 - 851.360).(450 - 45{,}87/2).\ 10^{-6} = 131{,}14 \text{ KNm}$$

$$Mn_2 = (As'_{ada}.fs').\ (d - d') = (851.360).(450 - 100)\ .\ 10^{-6} = 107{,}23 \text{ KNm}$$

$$Mnak^- = Mn1 + Mn_2 = 131{,}14 + 107{,}23 = 238{,}37 \text{ KNm}$$

2) Momen Aktual Balok Positif

$$\rho_{aktual} = \frac{As_{ada}}{b.d_{pakai}} = \frac{1420}{350.450} = 0{,}009$$

$$Rn = \rho.fy(1 - 1/2.\rho..m) = 0{,}009.360.(1\text{-}1/2.\ 0{,}009.18{,}82) = 2{,}96 \text{ Mpa}$$

$$Mnak^+ = Rn.b.d^2 = 2{,}96.350.450^2.10^{-6} = 210{,}18 \text{ KNm}$$

D. Perencanaan Tulangan Geser Balok

Adapun syarat penentuan gaya geser rencana balok adalah sebagai berikut:

$$Vu,b = 0,7\ \phi_0 \left[\frac{M_{nak,b} + M_{nak,b'}}{Ln} \right] + 1,05.Vg$$

Tetapi tidak lebih besar dari $Vu,b = 1,05\ (V_{D,b} + V_{L,b} + 4/k\ .V_{E,b})$

$V_D = 89,31$ KN ; $V_L = 26,79$ KN ; $V_E = 15,12$ KN

$$Vu,b = 0,7\ \phi_0 \left[\frac{M_{nak,b} + M_{nak,b'}}{Ln} \right] + 1,05.Vg$$

$$Vu,b = 0,7.1,25\left[\frac{238,37 + 210,18}{6}\right] + 1,05(89,31 + 26,79) = 187,32\ \text{KN}$$

Dengan syarat tidak lebih besar dari :

$Vu,b = 1,05\ (89,31 + 26,79 + 4/1\ .\ 15,12\ ) = 187,31$ KN

$$Vu,b_{\ pakai} = \left[1,05Vg - 0,7\phi_0\left(\frac{Mnak,b + Mnak,b'}{Ln}\right)\right] +$$

$$\frac{Ln - d}{Ln}\left[Vu,b - \left[1,05Vg - 0,7\phi_0\left[\frac{Mnak,b + Mnak,b'}{Ln}\right]\right]\right]$$

$$= \left[121,90 - 0,7.1,25\left(\frac{238,37 + 210,18}{6}\right)\right] +$$

$$\frac{6 - 0,45}{6}\left[187,31 - \left[121,90 - 0,7.1,25\left[\frac{238,37 + 210,18}{6}\right]\right]\right]$$

$$= 177,49\ \text{KN}$$

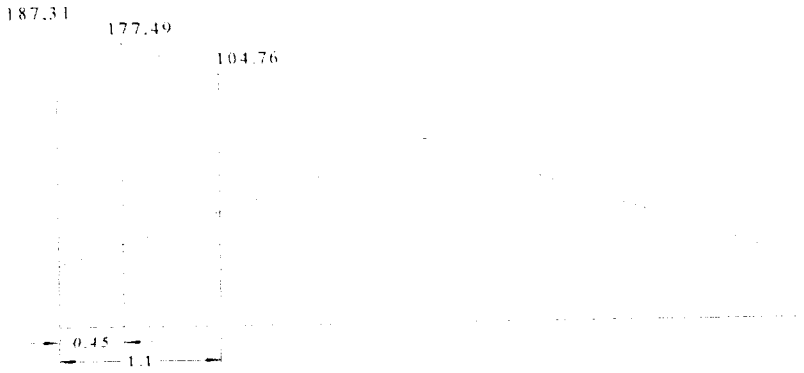

Gambar 4.19 Diagram Tegangan Geser Balok

1) dalam daerah sendi plastis

Vu,b untuk perencanaan di dalam daerah sendi plastis diambil sejauh d dari tumpuan, yaitu :

Vu,b = 177,49 KN

Vc = 0

$$\frac{Vu,b}{\phi} = \frac{177,49}{0,6} = 295,81 \text{ KN}$$

Digunakan sengkang Ø P10 mm, maka : Av = 2 . ¼ . π . 10^2 = 157 mm^2

Jarak sengkang :

$$s \leq \frac{Av.fy.d}{Vu,b/\phi - Vc} = \frac{157.240.450}{295,81 - 0} \cdot 10^{-3} = 57,3 \text{ mm}$$

$$\leq d/4 = 600/4 = 150 \text{ mm}$$

Jadi dipakai tulangan geser **P10 – 50 mm**

2) Diluar sendi plastis

Diambil jarak sejauh 2h = 2.550 = 1100 mm

$$Vu,b = 177,49 - \frac{177,49.(1,1-0,45)}{(3-0,45)} = 132,25 \text{ KN}$$

Vu,b = 132,25 KN

$$Vc = 1/6.\sqrt{fc'}.b.d = 1/6.\sqrt{22,5}.350.450.10^{-3} = 124,51 \text{ KN}$$

$$Vs = \frac{Vu,b}{\phi} - Vc = \frac{132,25}{0,6} - 124,51 = 95,91 \text{ KN}$$

Digunakan sengkang P10 mm, maka : $Av = 2 . \frac{1}{4} . \pi . 10^2 = 157 \text{ mm}^2$

Jarak sengkang :

$$s \leq \frac{Av.fy.d}{Vs} = \frac{157.240.450}{95,91} . 10^{-3} = 176,8 \text{ mm}$$

$$\leq d/2 = 450/2 = 225 \text{ mm}$$

$$\leq 600 \text{ mm}$$

Jadi dipakai tulangan geser **P10 – 170 mm**

E. Perencanaan Tulangan Torsi

Tu = 3,86 KNm

$$\sum x^2.y = 350^2 . 600 = 77,76.10^6 \text{ mm}^3$$

Pada redisain ini komponen struktur portal merupakan komponen statis tak tentu. Untuk komponen statis tak tentu setelah terjadi retak akibat torsi, dalam rangka untuk mencapai keseimbangan terjadi redistribusi tegangan torsional yang

mempengaruhi komponen lain yang bertemu pada satu titik buhul. Maka untuk menganalisis torsi dipakai torsi keserasian.

Kemampuan penampang beton menahan torsi untuk torsi keserasian :

$$Tu,b = \phi(\frac{1}{9}\sqrt{f'c}.\sum x^2.y) = 0,6.(\frac{1}{9}\sqrt{22,5}.77,76.10^6)$$

$$= 24,58 \text{ KNm} > Tu = 3,86 \text{ KNm}$$, tulangan torsi diabaikan.

4.5 Perencanaan Kolom

4.5.1 Perhitungan Momen dan Gaya Aksial Rencana

Contoh perhitungan pada kolom As – 8 portal A lantai 1

1. Momen untuk portal arah X

$M_{Dy\ atas}$ = -2,23 KNm

$M_{Dy\ bawah}$ = 1,36 KNm

$M_{Ly\ atas}$ = -0,48 KNm

$M_{Ly\ bawah}$ = 0,24 KNm

$M_{Ey\ atas}$ = 30,56 KNm

$M_{Ey\ bawah}$ = 40,32 KNm

Kombinasi pembebanan :

Atas

$1,2\ M_{Dy} + 1,6\ M_{Ly}$ = 1,2 .2,23 + 1,6.0,48 = 3,4 KNm

$1,05\ (M_{Dy} + M_{Ly} + M_{Ey})$ = 1,05 (2,23 + 0,48 + 30,56) = 35 KNm

Bawah

$1,2\ M_{Dy} + 1,6\ M_{Ly}$ = 1,2 . 1,36 + 1,6. 0,24 = 0,016 KNm

$1,05\ (M_{Dy} + M_{Ly} + M_{Ey})$ = 1,05 (1,36 + 0,24 + 40,32) = 44 KNm

2. Momen untuk portal arah Y

Data Momen

$M_{Dx\ atas}$ = 30,84 KNm

$M_{Dx\ bawah}$ = -15,61 KNm

$M_{Lx\ atas}$ = 9,32 KNm

$M_{Lx\ bawah}$ = -3,92 KNm

$M_{Ex\ atas}$ = -44,42KNm

$M_{Ex\ bawah}$ = 55,79 KNm

Kombinasi pembebanan :

Atas

$1,2\ M_{Dx} + 1,6\ M_{Lx}$ = 1,2 .30,84 + 1,6.9,32 = 52 KNm

$1,05\ (M_{Dx} + M_{Lx} + M_{Ex})$ = 1,05 (30,84 + 9,32 + 44,42) = 84,6 KNm

Bawah

$1,2\ M_{Dx} + 1,6\ M_{Lx}$ = 1,2 . 15,61 + 1,6. 3,92 = 25 KNm

$1,05\ (M_{Dx} + M_{Lx} + M_{Ex})$ = 1,05 (15,61 + 3,92 + 55,79) = 75,32 KNm

3. Gaya Aksial

Data Gaya Aksial

$P_{D\ atas}$ = -627,41 KNm

$P_{D\ bawah}$ = -410,57KNm

$P_{L\ atas}$ = -111,72 KNm

$P_{L\ bawah}$ = -111,72 KNm

$P_{Ex\ atas}$ = -7,91 KNm

$P_{Ex\ bawah}$ = -7,91 KNm

$P_{Ey\ atas}$ = 35,28 KNm

$P_{Ey\ bawah}$ = 35,28 KNm

Kombinasi pembebanan :

Atas

$1,2\ P_D + 1,6\ P_L$ = 1,2 .627,41 + 1,6.111,72 = 932 KNm

$1,05\ (P_D + P_L + P_E)$ = 1,05 (627,41 + 111,72 + 35,28) = 813 KNm

Bawah

$1{,}2\ P_D + 1{,}6\ P_L$ $= 1{,}2 \cdot 410{,}57 + 1{,}6 \cdot 111{,}72$ $= 671$ KNm

$1{,}05\ (P_D + P_L + P_E)$ $= 1{,}05\ (410{,}57 + 111{,}72 + 35{,}28) = 585$ KNm

4.5.2 Kriteria Kolom dan Pembesaran Kolom

Menghitung Kekakuan Kolom

1. Arah X

$$Ec = Eg = 4700\sqrt{f'c}$$

$$= 4700\sqrt{22{,}5}$$

$$= 22294 \text{ Mpa}$$

rencana dimensi kolom = 400x400 mm

Ic (Inersia kolom) $= \frac{1}{12} \cdot 400^3 \cdot 400 = 2{,}13 \cdot 10^9\ mm^4$

$$\beta d = \frac{1{,}2M_D}{1{,}2M_D + 1{,}6M_L} = \frac{1{,}2 \cdot 2{,}23}{1{,}2 \cdot 2{,}23 + 1{,}6 \cdot 0{,}48} = 0{,}80$$

$$EI = \frac{E_c \cdot I_c}{2{,}5(1+\beta \cdot d)} = \frac{22294 \cdot x2{,}13 \cdot 10^9}{2{,}5(1+0{,}8)} = 1{,}05 \cdot 10^{13}\ Nmm^2$$

Menghitung momen inersia balok di kanan dan kiri kolom, dengan menganggap momen inersia penampang retak balok sebesar setengah dari momen inersia penampang bruto, maka :

1. Momen inersia balok di kanan kiri atas kolom yaitu :

$$I_{cr} = \frac{1}{2}\left(\frac{1}{12} \cdot b \cdot h^3\right) = \frac{1}{2}\left(\frac{1}{12} \cdot 300 \cdot 400^3\right) = 0{,}8 \cdot 10^9\ mm^4$$

2. Momen inersia balok di kanan kiri balok bawah = 0, karena ujung jepit.

Lc (panjang bersih kolom) = 3,4 m

Lg (panjang bersih balok) = 4,6 m

$$\psi_{atas} = \psi_{bawah} = \frac{\sum\left(\frac{EI}{Lc}\right)}{\sum\left(\frac{Ec.Icr}{Lg}\right)}$$

$$\psi_{atas} = \frac{\left(\frac{1{,}05.10^{13}}{3400} + \frac{1{,}05.10^{13}}{3400}\right)}{\left(\frac{22294.0{,}8.10^{9}}{4600} + \frac{22294.0{,}8.10^{9}}{4600}\right)} = 0{,}79$$

ψ_{bawah} = 0 (ujung jepit)

Dari Nomogram portal tanpa pengaku, didapat k = 1,2

$$\frac{k.lu}{r} = \frac{1{,}2.3400}{0{,}3.400} = 34 > 22 \text{ (termasuk kolom langsing)}$$

Beban tekuk Euler yang terjadi adalah

$$Pc = \frac{\pi.^2 EI}{(k.Lc)^2} = \frac{\pi.^2 1{,}05.10^{13}}{(1{,}2.3400)^2} = 6225421 \text{ N}$$

Menghitung faktor pembesaran momen δ_{by}

$$\delta_{by} = \frac{Cm}{1 - \left(\frac{Pu}{\phi.Pc}\right)} \geq 1$$

Cm = 1 (untuk portal tanpa pengaku)

$$\delta_{by} = \frac{1}{1 - \left(\frac{932000}{0{,}65.6225421}\right)} \geq 1$$

$$= 1{,}3 \geq 1$$

Menghitung faktor pembesaran momen δ_{sy}

Σ Pu = (611000+932000+734626+737134+996396+733459)

= 4744615 N

Σ Pc = (6225421 x 6)

= 37352526 N

$$\delta_{sy} = \frac{1}{1-\sum\left(\frac{Pu}{Pc}\right)} \geq 1$$

$$= \frac{1}{1-\left(\frac{4744615}{37352526}\right)} \geq 1$$

$= 1{,}14 \geq 1$

Momen akibat pembesaran momen

Muy, bawah $= \delta_{by}$ Mby + δ_{sy} Msy

= (1,3 . 0.016) + (1,14 . 44)

= 50,2 KNm

Muy, atas $= \delta_{by}$ Mby + δ_{sy} Msy

= (1,3 . 3,4) + (1,14 . 35)

= 44,3 KNm

2. Arah Y

Ec = Eg $= 4700\sqrt{f'c}$

$= 4700\ \sqrt{22.5}$

= 22294 Mpa

rencana dimensi kolom = 400x400 mm

$$\frac{k.lu}{r} = \frac{1{,}05.3400}{0{,}3.400} = 29{,}75 < 22 \text{ (termasuk kolom langsing)}$$

Beban tekuk Euler yang terjadi adalah

$$Pc = \frac{\pi.^2 EI}{(k.Lc)^2} = \frac{\pi.^2 1{,}108.10^{13}}{(1{,}05.3400)^2} = 8580312 \text{ N}$$

Menghitung faktor pembesaran momen δ_{by}

$$\delta_{by} = \frac{1}{1-\left(\frac{932000}{0{,}65.8580312}\right)} \geq 1$$

$$= 1{,}2 \geq 1$$

Menghitung faktor pembesaran momen δ_{sy}

Σ Pu = (932000+1466812+1432058+1421661+1412827+1448501

+992966)

= 9106855 N

Σ Pc = (6225421 x 7) = 43577947 N

$$\delta_{sy} = \frac{1}{1-\sum\left(\frac{Pu}{.Pc}\right)} \geq 1$$

$$= \frac{1}{1-\left(\frac{9106855}{43577947}\right)} \geq 1$$

$$= 1{,}26 \geq 1$$

Momen akibat pembesaran momen

Muy, bawah $= \delta_{by}$ Mby + δ_{sy} Msy

= (1,2 . 25) + (1,26 . 75,32)

= 125 KNm

Muy, atas $= \delta_{by}$ Mby + δ_{sy} Msy

= (1,2 . 52) + (1,26 . 84,6)

= 169 KNm

4.5.3 Analisis Gaya Aksial dan Momen akibat balok

Contoh perhitungan pada kolom As – 8 portal A lantai 1

h = 4 m

hn = 3,4 m

Rv = 1 (jumlah lantai ; $1 < n \leq 4$)

ωd = 1,3 kecuali untuk kolom lantai 1 dan lantai paling atas yang kemungkinan terjadi sendi plastis pada kolom, ωd = 1

k = 1

a. Perhitungan Arah X

$Mkap_{(kiri)}$ = 1,25. Mnak = 1,25.180,5 = 225,625 KNm

$Mkap_{(kanan)}$= 1,25. Mnak = 1,25. 180,5 = 225,625 KNm

menghitung gaya aksial rencana :

$$Pu,k_y = 0,7.\ Rv.\ \frac{Mkap_{kiri} + Mkap_{kanan}}{l} + 1,05.\ Ng$$

$$= 0,7.\ 1.\ \frac{225,625}{4} + \frac{225,625}{4} + 1,05(627,41 + 111,72\ )$$

= 621,18 KN

tidak perlu melebihi :

$Pu,k_y = 1,05\ (N_D + N_L + 4.N_E)$

= 1,05 (627,41 + 111,72 + 4.35,28)

= 924,26 KN

menghitung α :

$M_{Ey\ atas}$ = 30,56 KNm

$M_{Ey\ bawah}$ = 40,32 KNm

$$\alpha\ ka = \frac{M_{E.k(lti+latas)}}{M_{E.k(lti+latas)} + M_{E.k(ltibawah)}} = \frac{30,56}{30,56 + 40,32} = 0,43$$

$$\alpha\ kb = \frac{M_{E.k(ltibawah)}}{M_{E.k(lti+latas)} + M_{E.k(ltibawah)}} = \frac{40,32}{30,56 + 40,32} = 0,57$$

menghitung momen rancang kolom :

$$Mu,k_y\ atas = \frac{hn}{h}\ \omega d.\alpha.0,7.\left(\frac{l_{ki}}{\Gamma_{ki}} Mkap,ki + \frac{l_{ka}}{\Gamma_{ka}} Mkap,ka\right)$$

$$= \frac{3,4}{4}.1,0\ .\ 0,43.0,7.\left(\frac{5}{4,6}.225,625 + \frac{5}{4,6}.225,625\right)$$

= 153,43 KNm

$$Mu,k_y\ bawah = \frac{hn}{h}\ \omega d.\alpha.0,7.\left(\frac{l_{ki}}{\Gamma_{ki}} Mkap,ki + \frac{l_{ka}}{\Gamma_{ka}} Mkap,ka\right)$$

$$= \frac{3,4}{4}.1,0.0,57\ .\ 0,7.\left(\frac{5}{4,6}.225,625 + \frac{5}{4,6}.225,625\right)$$

= 191,30 kNm

tidak perlu melebihi :

$$Mu,k = 1,05(M_{Dy} + M_{Ly} + \frac{4}{k}\ M_{Ey})$$

$$= 1,05\ (2,23 + 0,48\ + \frac{4}{1}(40,32))$$

= 172,2 KNm

b. .Perhitungan Arah Y

$Mkap_{(kiri)}$ = 1,25. Mnak = 1,25.0 = 0 KNm

$Mkap_{(kanan)}$ = 1,25. Mnak = 1,25.237,85 = 297,31 KNm

menghitung gaya aksial rencana :

$$Pu,k_x = 0,7.\ Rv.\ \frac{Mkap_{kiri} + Mkap_{kanan}}{l} + 1,05.\ Ng$$

$$= 0,7.\ 1.\ \frac{0}{0} + \frac{297,31}{4} + 1,05(627,41 + 111,72\ )$$

= 850,41 KN

tidak perlu melebihi :

Pu,k_x = 1,05 (N_D+ N_L+ 4.N_E)

= 1,05 (627,41 + 111,72 + 4.35,28)

= 924,26 KN

menghitung α :

$M_{Ex\ atas}$ = -44,42KNm

$M_{Ex\ bawah}$ = 55,79 KNm

$$\alpha\ ka = \frac{M_{E.k(lti+latas)}}{M_{E.k(lti+latas)} + M_{E.k(ltibawah)}} = \frac{44,42}{44,42 + 55,79} = 0.44$$

$$\alpha\ kb = \frac{M_{E.k(ltibawah)}}{M_{E.k(lti+latas)} + M_{E.k(ltibawah)}} = \frac{55,79}{44,42 + 55,79} = 0.56$$

menghitung momen rancang kolom :

$$Mu,k_x\ atas = \frac{hn}{h}\ \omega d.\alpha.0,7.\left(\frac{l_{ki}}{l'_{ki}} Mkap,ki + \frac{l_{ka}}{l'_{ka}} Mkap,ka\right)$$

$$\frac{Pu,k_y}{\phi} = \frac{621,18}{0,65} = 955,7 \text{ KN}$$

$$\frac{Mu,k_x}{\phi} = \frac{129,20}{0,65} = 198,77 \text{ KNm}$$

$$\frac{Mu,k_y}{\phi} = \frac{248,7}{0,65} = 382,6 \text{ KNm}$$

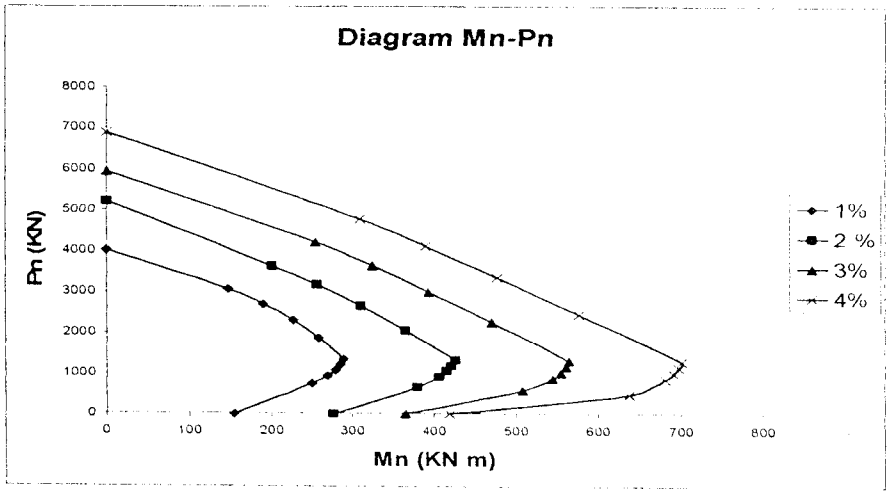

Gambar 4.20 Grafik Mn – Pn Kolom

a. Arah x

$$\frac{Pu,k_y}{\phi} = \frac{621,18}{0,65} = 955,7 \text{ KN}$$

$$\frac{Mu,k_y}{\phi} = \frac{248,7}{0,65} = 382,6 \text{ KNm}$$

Dari grafik Mn vs Pn didapat $\rho_g = 2$ %

Ast = 0,02.400.400 = 3200 mm^2

As = As' = 0,5.Ast = 1600 mm^2

dipakai 5D22 dengan $As_{ada} = As'_{ada} = 1901$ mm^2

Cek eksentrisitas balance (e_b)

$$Xb = \frac{600.d}{600+fy} = \frac{600.340}{600+360} = 212,5 \text{ mm}$$

$ab = \beta_1 . Xb = 0,85 . 212,5 = 180,625$ mm

$$f's = 600\frac{(Xb-d')}{Xb} = 600\frac{(180-60)}{180} = 400 \text{ MPa} > fy = 360 \text{ MPa}$$

Dengan demikian digunakan f's = fy = 360 MPa

Ccb = 0,85.f'c.b.ab = 0,85.22,5.360.180,625 = 1243603 N

Csb = As'(fs'- 0,85.f'c) = 1901.(360 – 0,85.22,5) = 648003 N

Tsb = As.fy = 1901 .360 = 684360 N

Pnb = Ccb + Csb – Tsb = 1243603 + 648003 - 684360

= 1207246 N = 1207 KN

$$Mnb = Ccb\left[\frac{h}{2}-\frac{ab}{2}\right] + Csb\left(\frac{h}{2}-d'\right) + Tsb\left(d-\frac{h}{2}\right)$$

$$= 1243603\left[\frac{400}{2}-\frac{180,625}{2}\right] + 648003\left(\frac{400}{2}-60\right)$$

$$+ 684360\left(340-\frac{400}{2}\right)$$

= 322938524 Nmm = 332,93 KNm

$$eb = \frac{Mnb}{Pnb} = \frac{332,93}{1207} = 0,27 \text{ m}$$

$$e = \frac{Mu_k, y/\phi}{Pu_k/\phi} = \frac{382,6}{955,7} = 0,4 \text{ m}$$

karena $e > e_b$ ⟶ kolom mengalami patah tarik

Kontrol tegangan pada daerah desak :

$$Pn = \frac{As'.fy}{\frac{e}{(d-d')} + 0,5} + \frac{b.h.fc'}{\frac{3.h.e}{d^2} + 1,18}$$

$$= \frac{1901.360}{\frac{400}{(340-60)} + 0,5} + \frac{400.400.22,5}{\frac{3.400.400}{340^2} + 1,18}$$

$$= 1029990 \text{ N} = 1029,9 \text{ KN}$$

$$Pn = 1029,9 \text{ KN} > \frac{Pu_k}{\phi} = 955,7 \text{ KN} \text{ ..... } \textbf{Ok !}$$

$$Mn = Pn \,.\, e$$

$$= 1029,9.\ 400$$

$$= 411,9 \text{ KNm} > \frac{Mu, k_y}{\phi} = 382,6 \text{ KNm}$$

b. Arah y

$$\frac{Pu, kx}{\phi} = \frac{593,05}{0,65} = 912,4 \text{ KN}$$

$$\frac{Mu, k_x}{\phi} = \frac{129,20}{0,65} = 198,77 \text{ KNm}$$

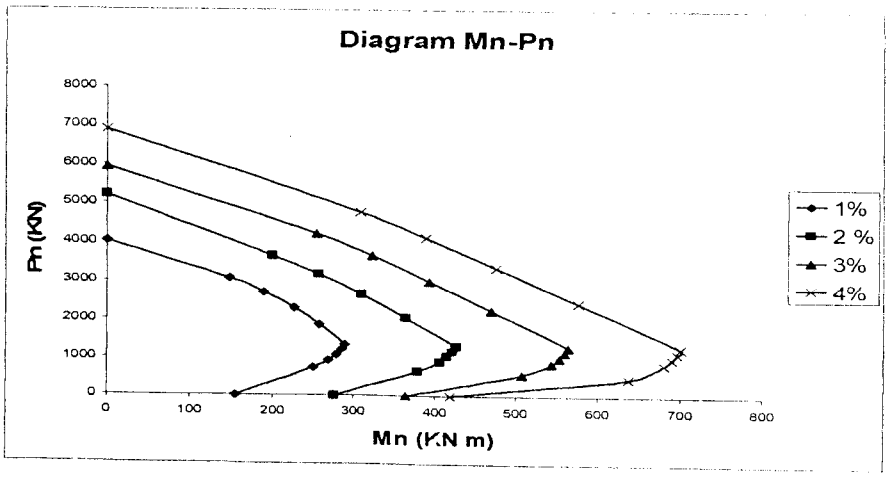

Gambar 4.21 Grafik Mn – Pn Kolom

Dari grafik Mn vs Pn didapat $\rho_g = 1\ \%$

Ast = 0,01.400.400 = 1600 mm^2

As = As' = 0,5.Ast = 800 mm^2

dipakai 3D22 dengan $As_{ada} = As'_{ada} = 1140\ mm^2$

Cek eksentrisitas balance (e_b)

$$cb = \frac{600.d}{600 + fy} = \frac{600.340}{600 + 360} = 215,5\ mm$$

$ab = \beta_1 . cb = 0,85 . 212,5 = 180,7$ mm

$$f'sb = 600\frac{(cb - d')}{cb} = 600\frac{(180,7 - 60)}{180,7} = 401\ MPa > fy = 360\ MPa$$

digunakan f'sb = fy = 360 MPa

Ccb = 0,85.f'c.b.ab = 0,85.22,5.360. 180,7 = 1244119 N

Csb = As'(fs'- 0,85.f'c) = 1140.(360 – 0,85.22,5) = 388597 N

Tsb = As.fy = 1140.360 = 410400 N

Pnb = Ccb + Csb – Tsb = 1244119 + 388597 – 410400

= 1222316 = 1222,3 KN

$$Mnb = Ccb\left[\frac{h}{2} - \frac{ab}{2}\right] + Csb\left(\frac{h}{2} - d'\right) + Tsb\left(d - \frac{h}{2}\right)$$

$$= 1244119.\left[\frac{400}{2} - \frac{180,7}{2}\right] + 388597.\left(\frac{400}{2} - 60\right) + 410400\left(340 - \frac{400}{2}\right)$$

= 248277228 Nmm = 248,27 KNm

$$eb = \frac{Mnb}{Pnb} = \frac{248,27}{1222,3} = 0,203$$

$$e = \frac{Mu_{,kx} / \phi}{Pu_{,k} / \phi} = \frac{198.77}{912,4} = 0,22$$

karena e > e_b ,kolom mengalami patah tarik

Kontrol kapasitas kolom terhadap patah tarik :

$$Pn = \frac{As'.fy}{\frac{e}{(d-d')}+0,5} + \frac{b.h.fc'}{\frac{3.h.e}{d^2}+1,18}$$

$$= \frac{1140.360}{\frac{220}{(340-60)}+0,5} + \frac{400.400.22,5}{\frac{3.400.220}{340^2}+1,18}$$

= 1346640,5 N = 1346,64 KN

$$Pn = 1346,64 \text{ KN} > \frac{Pu_k}{\phi} = 912,4 \text{ KN}$$ ..... **Ok !**

Mn = Pn . e

= 1346,64 . 0,223

$$= 300,3 \text{ KNm} > \frac{Mu,k_x}{\phi} = 198,77 \text{ KN}$$

4.5.5 Perencanaan Tulangan Geser Kolom

$Mu,_k$ atas = 153,43 KNm

$Mu,_k$ bwh = 191,30 kNm

$V_{D,}k$ = 11,61 KN

$V_{L,}k$ = 3,31KN

$V_{Ex,}k$ = 25,03 KN

$V_{Ey,}k$ = 17,72 KN

h_n = 3,60 m

$$V_{u,k} = \frac{Mu,k_{atas} + Mu,k_{bawah}}{h_n} = \frac{153,43+191,30}{3,60} = 96 \text{ KN}$$

BAB VI

KESIMPULAN DAN SARAN

6.1 Kesimpulan

Berdasarkan hasil perhitungan dan pembahasan pada bab-bab sebelumnya dapat diambil kesimpulan sebagai berikut :

1. Perencanaan konstruksi meliputi :
   - Perencanaan menggunakan metode tegangan kerja *(working design method)*.
   - Perencanaan pelat menggunakan metode koefisien momen dengan menganggap tumpuan tepi jepit elastis sehingga didapat koefisien momen dari tabel 13.3.2.PBI 1971.
   - Perencanaan portal dengan daktilitas penuh meliputi balok dan kolom direncanakan berdasarkan SK SNI T-15-1991-03.
2. Dalam perencanaan beton bertulang pemilihan dimensi sangat berpengaruh terhadap besarnya tulangan yang digunakan, dimensi yang terlalu besar mengakibatkan luas tulangan yang digunakan akan besar dan hal ini akan sangat berpengaruh terhadap biaya proyek.
3. Pada perencanaan pelat, balok – balok sederhana untuk mendukung dinding partisi apabila dihilangkan akan mengakibatkan luasan tulangan perlu As perlu pelat lantai akan menjadi lebih besar.

4. Sambungan pada dudukan kuda – kuda hubungan baja ke baja akan lebih baik dari pada hubungan baja ke beton dan juga hubungan baja ke baja akan lebih mudah dalam pelaksanaannya / instalasi.

6.2 Saran

Dengan mempertimbangkan hal – hal tersebut di atas, maka dapat diberikan beberapa saran antara lain sebagai berikut :

1. Perlu adanya perhitungan sampai tahap akhir (RAB) pada tugas akhir ini, sehingga penghematan dari segi biaya dapat diketahui dengan jelas.
2. Perlu adanya re-disain untuk Tugas Akhir ini dengan peningkatan spesifikasi bahan yang lain sehingga diketahui sejauh mana efisiensi bahan yang digunakan.

DAFTAR PUSTAKA

AISC, *Load and Resistance Factor Design Specification*, American Institute of Steel Construction Inc, Chicago, 1999.

Asroni, Ali, *Konstruksi Kayu I* ,Jurusan Teknik Sipil Universitas Muhammadiyah Surakarta, Surakarta , 1994

A. Kadir Aboe, Ir,MS. *Diktat Kuliah Struktur Beton-1*, Jurusan Teknik Sipil Universitas Islam Indonesia, Yogyakarta, 2000.

Chu-Kia Wang, Charles G. Salmon, *Disain Beton Bertulang*, Edisi Keempat, Jilid 2, Erlangga, Jakarta, 1989.

Chu-Kia Wang, Charles G. Salmon, *Disain Beton Bertulang*, Edisi Keempat, Jilid 1, Erlangga, Jakarta, 1993.

Direktorat Penyelidikan Masalah Bangunan, *Peraturan Beton Bertulang Indonesia 1971 N.I.-2*, Departemen Pekerjaan Umun, Bandung, 1971.

Direktorat Penyelidikan Masalah Bangunan,, *Peraturan Pembebanan Indonesia Untuk Gedung*, Departemen Pekerjaan Umum, Bandung, 1983.

Direktorat Penyelidikan Masalah Bangunan,, *Pedoman Perencanaan Tahan Gempa Indonesia Untuk Rumah dan Gedung SKBI-1.3.53.1987*, Departemen Pekerjaan Umum, Jakarta, 1987.

Direktorat Penyelidikan Masalah Bangunan,, *Tata Cara Perhitungan Struktur BetonUntuk Bangunan Gedung SK SNI T-15-1971-03*, Bandung, 1971.

Edward G Nawi, *Beton Bertulang*, Refika Aditama, Bandung, 1998.

Fatkhurrahman. NS, Ir. MT, *Diktat Kuliah Struktur Beton* , Jurusan Teknik Sipil Universitas Islam Indonesia, Yogyakarta, 2000.

Fatkhurrahman, Ns, Ir, MT, *Hand Out Struktur Kayu Batang Tekan*, Jurusan Teknik Sipil Universitas Islam Indonesia, Yogyakarta, 2003

Gideon Kusuma, Takim Adriono, *Desain Struktur Rangka Beton Bertulang Di Daerah Rawan Gempa*, Erlangga, Jakarta, 1993.

Gunawan, Rudy, Ir, Morisco, Ir, *Tabel Profil Konstruksi Baja*, Penerbit Kanisius, Yogyakarta, 1987.

Gunawan ,Ir, Margaret , Ir, *Diktat Teori Soal dan Penyelesaian Konstruksi Baja II Jilid I*, Delta Teknik Group Jakarta, 2003.

Ilman Noor, Ir, MSCE, *Catatan Kuliah Struktur Beton 1 & 2.*

Ilman Noor, Ir, MSCE, *Catatan Kuliah Struktur Baja 1.*

Istimawan Dipohusodo, *Struktur Beton Bertulang,* Gramedia Pustaka Utama, Jakarta, 1994.

Natsir, M , *Tugas Akhir Desain Ulang Struktur Gedung Fakultas Hukum Universitas Inslam Indonesia*, Yogyakarta, 2003

Purwanto, Edy, Ir, DEA, *Diktat Kuliah Struktur Pondasi Dalam.*

Salmon, C.G., Jhonson, J.E., *Struktur Baja-Desain dan Perilaku,* Jilid I, Gramedia Pustaka Utama, Jakarta, 1996.

Sukardi, Wandoyo, *Tugas Akhir Perancangan Gedung Pertokoan Simpang Lima Semarang*, Yogyakarta,1990

Wakhyudi, *Tugas Akhir Redesain Gedung Pimpinan Muhammadiyah Semarang,* Yogyakarta,2003

W.C. Vis, Gideon Kusuma, *Dasar – Dasar Perencanaan Beton Bertulang*, Erlangga, Jakarta, 1997.

W.C. Vis, Gideon Kusuma, *Grafik dan Tabel Perhitungan Beton Bertulang*, Jakarta, 1997.

tetapi tidak perlu lebih besar dari :

$$V_{u,k} = 1{,}05\ (V_{D,k} + V_{L,k} + \frac{4}{k}(V_{E,k})$$

$$= 1{,}05\ (\ 11{,}61 + 3{,}31 + \frac{4}{1}.(25{,}03 + 0{,}3.17{,}72)$$

$$= 143{,}12 \text{ KN}$$

$$\frac{V_{U},k}{\phi} = \frac{96}{0{,}6} = 160 \text{ KN}$$

di daerah sejauh *lo*

kekuatan beton dalam menahan gaya geser dianggap 0 (Vc = 0)

$$Vs = \frac{V_{U},k}{\phi} = 160 \text{ KN}$$

Dipakai tulangan geser Ø P10 mm, maka :

$$Av = 2\ .\ ¼\ .\pi\ .\ 10^2 = 157 \text{ mm}^2$$

$$\text{Jarak (s)} < \frac{Av.fy.d}{Vs} = \frac{157.240.340}{160.10^3} = 80{,}07 \text{ mm}$$

$$< d/4 = 85 \text{ mm}$$

$$< 16.D = 160 \text{ mm}$$

Digunakan sengkang **$P_{10\text{-}80}$ mm**

di luar daerah *lo*

$$Vc = \left(1 + \frac{P_{U},k}{14.A_g}\right).\frac{1}{6}\sqrt{fc'}.b.d = \left(1 + \frac{621{,}18.10^3}{14.400.400}\right).\frac{1}{6}\sqrt{22{,}5}.400.340$$

$$= 137{,}4 \text{ KN} < \frac{V_{U},k}{\phi} = 160 \text{ KN, maka perlu tulangan geser.}$$

$$Vs = \frac{V_{U},k}{\phi} - Vc = 160 - 137{,}4 = 22{,}6 \text{ KN}$$

Dipakai tulangan geser Ø P10 mm, maka :

$Av = 2 \,.\, \frac{1}{4} \,.\pi \,.\, 10^2 = 157 \text{ mm}^2$

Jarak (s) $< \dfrac{Av.fy.d}{Vs} = \dfrac{157.240.340}{22{,}6.10^3} = 566$ mm

$< d/2 = 170$ mm

$< 16.D = 160$ mm

Digunakan sengkang $\mathbf{P_{10\text{-}170}}$ **mm**

4.5.6 Pertemuan Balok Kolom

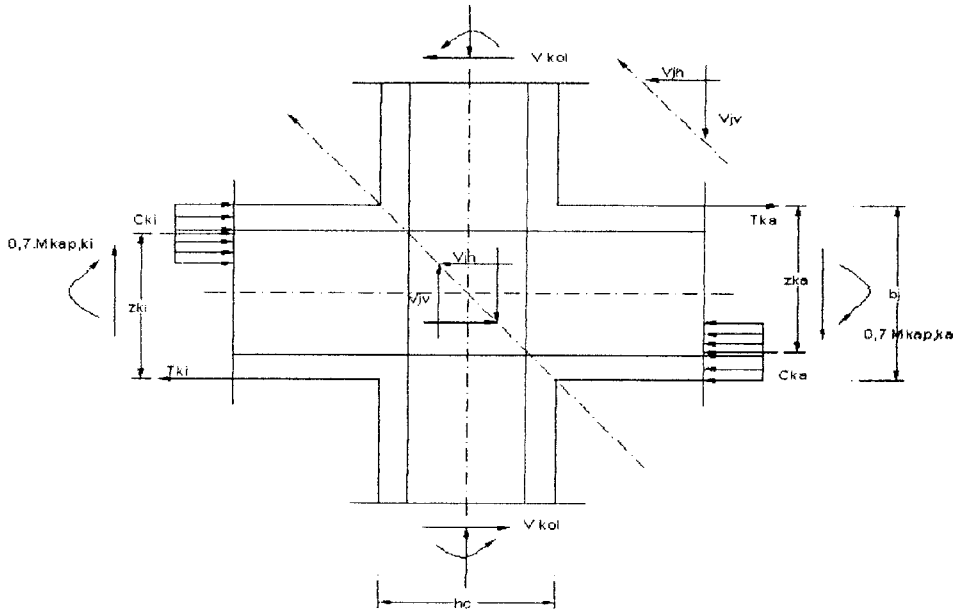

Gambar 4.22 Joint Balok Kolom Dalam

a. Perhitungan gaya-gaya dalam

1). Sumbu X

b_j = bc = 400 mm

= bb + 0,5.hc = 350 + 0,5.400 = 550 mm

b_j pakai = 400 mm

h_c = 400 mm

$$V_{kol,x} = \frac{0{,}7\ .\ (\frac{lki}{lki'}.\ M_{kap,ki} + \frac{lka}{lka'}\ M_{kap,ka}\ )}{\frac{1}{2}\ .\ (h_{k,a} + h_{k,b}\ )}$$

$$V_{kol,x} = \frac{0{,}7\ .\ (\ \frac{5}{4{,}6}\ .\ 225{,}625 + \frac{5}{4{,}6}\ .\ 225{,}625\ )}{\frac{1}{2}\ .\ (\ 3{,}5 + 3{,}5\ )} = 99\ \text{KN}$$

$z_{ki,x}$ = 0,9.d = 0,9.340 = 306 mm = 0,306 m

$z_{ka,x}$ = 0,9.d = 0,9.340 = 306 mm = 0,306 m

$C_{ki,x} = T_{ki,x} = 0{,}7M_{kap,bx\text{-}ki})/z_{ki,x}$

= 0,7.(225,625)/0,306 = 516,1 KN

$C_{ka,x} = T_{ka,x} = 0{,}7.M_{kap,bx\text{-}ka})/z_{ka,x}$

= 0,7. (225,625)/0,306 = 516,1 KN

$V_{jh,x} = C_{ki,x} + T_{ka,x} - V_{kol,x}$ = 516.1 + 516,1 – 99

= 933,3 KN

Kontrol tegangan geser horizontal :

$$v_{jh,x} = \frac{V_{jh,x}}{b_j.h_c} \leq 1{,}5\sqrt{f'c}$$

$$v_{jh,x} = \frac{933{,}3}{0{,}4.0{,}4} = 5833\ \text{KN/m}^2$$

= 5,8 N/mm^2 < 1,5.$\sqrt{22{,}5}$ = 7,115 N/mm^2 .....**Ok !**

$$V_{ch,x} = 2/3\ .\sqrt{\left\{\left(\frac{Pu,k}{Ag}\right) - 0{,}1.f'c\right\}}.b_j.h_c$$

$$V_{ch,x} = 2/3.\sqrt{\left\{\left(\frac{621{,}18.10^3}{400.400}\right) - 0{,}1.22{,}5\right\}}.400.400$$

= 136282 N = 136,3 KN

$V_{sh,x} = V_{jh,x} - V_{ch,x}$

$= 933,3 - 136,3 = 797$ KN

2). Arah Y

$b_j = bc = 400$ mm

$= bb + 0,5.hc = 350 + 0,5.400 = 550$ mm

b_j pakai = 400 mm

$h_c = 400$ mm

$$V_{kol,x} = \frac{0,7 \cdot \left(\frac{lki}{lki'} \cdot M_{kap,ki} + \frac{lka}{lka'} \cdot M_{kap,ka} \right)}{\frac{1}{2} \cdot (h_{k,a} + h_{k,b})}$$

$$V_{kol,x} = \frac{0,7 \cdot \left(\frac{5}{4,6} \cdot 0 + \frac{5}{4,6} \cdot 237,85 \right)}{\frac{1}{2} \cdot (3,5 + 3,5)} = 51,70 \text{ KN}$$

$z_{ki,y} = 0,9.d = 0,9.340 = 306$ mm $= 0,306$ m

$z_{ka,y} = 0,9.d = 0,9.340 = 306$ mm $= 0,306$ m

$C_{ka,y} = T_{ka,y} = 0,7.M_{kap,by\text{-}ka})/z_{ka,y}$

$= 0,7.(237,85)/0,306 = 544,1$ KN

$V_{jh,y} = C_{ki,y} + T_{ka,y} - V_{kol,y}$

$= 0 + 650,8 - 51,70 = 599,1$ KN

Kontrol tegangan geser horizontal :

$$v_{jh,y} = \frac{V_{jh,y}}{b_j.h_c} \leq 1,5\sqrt{f'c}$$

$$v_{jh,y} = \frac{599,1}{0,4.0,4} = 3744,37 \text{ KN/m}^2$$

$= 3,744$ N/mm^2 $< 1,5.\sqrt{22,5} = 7,115$ N/mm^2 .....**Ok !**

$$V_{ch,y} = 2/3 \cdot \sqrt{\left\{\left(Pu,k/Ag\right) - 0,1.f'c\right\}} .b_j.h_c$$

$$V_{ch,y} = 2/3. \sqrt{\left\{\left(593,05.10^3/400.400\right) - 0,1.22,5\right\}} .400.400$$

$$= 128734 \text{ N} = 128,7 \text{ KN}$$

$$V_{sh,y} = V_{jh,y} - V_{ch,y}$$

$$= 599,1 - 128,7 = 470,4 \text{ KN}$$

b. Penulangan Geser Horisontal

$V_{sh,mak} = V_{sh,x} = 797$ KN

$$A_{jh} = \frac{V_{sh,mak}}{fy} = \frac{797.10^3}{360} = 2213,88 \text{ mm}^2$$

Digunakan sengkang rangkap Ø P10 dengan Av = 314 mm^2

$$\text{Jumlah lapis sengkang} = \frac{2213,88}{314} = 7,05 \text{lapis}$$

digunakan sengkang rangkap Ø 8P10

c. Penulangan geser vertikal

$$V_{cv} = \frac{A_{sc'}}{A_{sc}} V_{jh,mak} \cdot \left(0,6 + Pu,k/Ag.f'c\right)$$

$$V_{cv} = 1 \cdot 933,3 .10^3 \left(0,6 + 621,18.10^3/400.400.22,5\right)$$

$$= 721021 \text{ N} = 721 \text{ KN}$$

$$V_{jv} = bj/h_c.V_{jh,mak}$$

$$= (0,4/0,4).\ 933,3 = 933,3 \text{ KN}$$

$$V_{sv} = V_{jv} - V_{cv} = 933,3 - 721 = 212,3 \text{ KN}$$

Gunakan Mox untuk perencanaan

$$Mox = Mnx + Mny.\frac{h}{b}.\frac{1-\beta}{\beta}$$

Digunakan $\beta = 0{,}65$ untuk perencanaan

b = 400 mm, h = 400 mm, d = 330 mm, d' = 70 mm

$$Mox = 189{,}18 + 300{,}61.\frac{0{,}4}{0{,}4}.\frac{1-0{,}65}{0{,}65}$$

$$= 351{,}04 KNm$$

Kontrol kapasitas Pn pada penampang yang diasumsikan

Dianggap $\rho = \rho' = 0{,}015$

$As = As' = \rho.b.d = 0{,}015 \,.\, 400 \,.\, 330 = 1980 \text{ mm}^2$

Pakai 6D22 dengan $As_{ada} = As'_{ada} = 2281 \text{ mm}^2$

Cek eksentrisitas balance (e_b)

$$Xb = \frac{600.d}{600 + fy} = \frac{600.330}{600 + 360} = 206{,}25 \text{ mm}$$

$ab = \beta_1 \,.\, Xb = 0{,}85 \,.\, 206{,}25 = 175{,}31$ mm

$$f's = 600\frac{(Xb - d')}{Xb} = 600\frac{(206{,}25 - 70)}{206{,}25} = 396{,}36 \text{ MPa} > fy = 360 \text{ MPa}$$

Dengan demikian digunakan f's = 360 MPa

Ccb = 0,85.f'c.b.ab = 0,85.25.400.175,31 = 1490135 N

Csb = As'(fs'- 0,85.f'c) = 2281.(360 – 0,85.22,5) = 777536 N

Tsb = As.fy = 2281.360 = 821160 N

Pnb = Ccb + Csb – Tsb = 1490135 + 777536 – 821160

= 1446511 N = 1446,511 KN

Karena Pnb > Pn, maka patah yang terjadi adalah patah tarik

$$\rho = \frac{As}{bd} = \frac{2281}{400.330} = 0{,}017$$

$$e = \frac{Mox}{Pn} = \frac{351{,}04}{887{,}4} = 0{,}396 \text{ m}$$

$$e' = e + \frac{d - d'}{2} = 396 + \frac{330 - 70}{2} = 526$$

$$1 - \frac{e'}{d} = 1 - \frac{526}{330} = -0{,}59$$

$$m = \frac{fy}{0{,}85 f'c} = \frac{360}{0{,}85.22{,}55} = 18{,}82$$

Kontrol tegangan pada daerah desak :

$$Pn = \frac{As'.fy}{\frac{e}{(d - d')} + 0{,}5} + \frac{b.h.fc'}{\frac{3.h.e}{d^2} + 1{,}18}$$

$$= \frac{2281.360}{\frac{396}{(330 - 70)} + 0{,}5} + \frac{400.400.22{,}5}{\frac{3.400.396}{330^2} + 1{,}18}$$

$$= 955289 \text{ N} = 955{,}28 \text{ KN}$$

Kontrol keserasian regangan

$$a = \frac{Pn}{0{,}85.f'c.b} = \frac{955{,}28}{0{,}85.22{,}5.400} = 124{,}87 \text{ mm}$$

$$c = \frac{600}{600 + fy}.d = \frac{600}{600 + 360}.330 = 206{,}25$$

$$f's = 600\frac{(c - d')}{c} = 600\frac{(206{,}25 - 70)}{206{,}25} = 396 > fy = 360 \text{ Mpa}$$

f's > fy, mka f's = fy = 360

Menghitung Momen tahanan nominal actual Moyn untuk lentur uniaksial ekuivalen terhadap sumbu y bila Mox = 0

$$a = \frac{Pn}{0{,}85.f'c.b} = \frac{887{,}4.10^3}{0{,}85.22{,}5.400} = 116 \text{ mm}$$

$$c = \frac{600}{600 + fy}.d = \frac{600}{600 + 360}.330 = 206{,}25$$

$$f's = 600\frac{(c - d')}{c} = 600\frac{(206{,}25 - 70)}{206{,}25} = 396 > fy = 360 \text{ Mpa}$$

f's > fy, mka f's = fy = 360

$$\text{Moyn} = Pn = \frac{As'.fy}{\frac{e}{(d - d')} + 0{,}5} + \frac{b.h.fc'}{\frac{3.h.e}{d^2} + 1{,}18}$$

$$= \frac{2281.360}{\frac{396}{(330 - 70)} + 0{,}5} + \frac{400.400.22{,}5}{\frac{3.400.396}{330^2} + 1{,}18}$$

$$= 955289 \text{ N} = 955{,}28 \text{ KN}$$

Menghitung Momen tahanan nominal actual Moyn untuk lentur uniaksial ekuivalen terhadap sumbu x bila Mox = 0

Dalam kondisi ini, b = 400 mm; h = 400 mm; d = 330mm dan As =As'.

$$a = \frac{Pn}{0{,}85.f'c.b} = \frac{887{,}4.10^3}{0{,}85.22{,}5.400} = 116 \text{ mm}$$

$$c = \frac{600}{600 + fy}.d = \frac{600}{600 + 360}.330 = 206{,}25$$

$$f's = 600\frac{(c - d')}{c} = 600\frac{(206{,}25 - 70)}{206{,}25} = 396 > fy = 360 \text{ Mpa}$$

f's = fy = 360 Mpa

4.6 Perencanaan Pondasi

4.6.1 Daya Dukung Tiang Pancang Tunggal

Berikut ini contoh perhitungan daya dukung tiang pancang tunggal pada join 17 dengan menggunakan data sondir S4.

Data tiang :

Dimensi	= 250 x 250 mm	;	Mx	= 23,61 KNm
Panjang	= 4.5 m	;	My	= 28,16 KNm
Fc' tiang	= 22,5 mpa	;	fc' pile cap = 22,5 mpa	
P tiang	= 1645 KN			

Data sondir :

Kedalaman 8 D di atas ujung tiang : 210 kg/cm^2

Kedalaman 3D di bawah ujung tiang : >210 kg/cm^2 diambil 250 kg/cm^2

JHP pada kedalaman 1,35 m : 70 kg/cm

JHP pada kedalaman 6 m : > 296.67 kg/cm diperkirakan 300 kg/cm

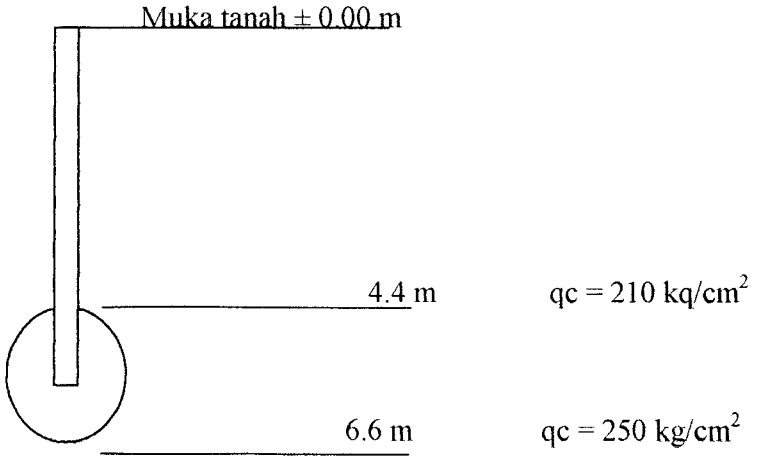

Gambar 4.23 Tiang Pancang Tunggal

Daya dukung ujung tiang

$$qc = \frac{qc_1 + qc_2}{2} = \frac{210 + 250}{2} = 230\ kg/cm^2$$

$$Qp = A_p \times qc = (25 \times 25) \times 230 = 143750\ kg$$

daya dukung selimut tiang

$$Qs = A_s \times JHP = (4 \times 25) \times (300 - 70) = 23000\ kg$$

$$Qu = Qp + Qs = 143750 + 23000 = 166750\ kg$$

$$Qall = \frac{Qp}{Sf} + \frac{Qs}{Sf}$$

$$Qall = \frac{143750}{3} + \frac{23000}{5} = 52516\ kg = 525\ KN$$

berat tiang = 0,25 . 0,25 . 4,5 .24 =6,75 KN

daya dukung tiang yang diijinkan = 525 – 7 = 518,25 KN

beban yang bekerja :

Gaya normal kolom		= 1645 KN
Berat tanah urug	= 0,5 . 2,4 . 2,4 . 18	= 52 KN
Berat poer	= 2,4 . 2,4 . 1 . 24	= 138 KN +
	Total P kolom	= 1835 KN

4.6.2 Daya dukung Tiang Pancang Kelompok

Dari analisis daya dukung tiang pancang tunggal dicoba digunakan 4 tiang pancang dengan formasi tiang pancang seperti gambar berikut :

4.6.3 Perencanaan pile cap

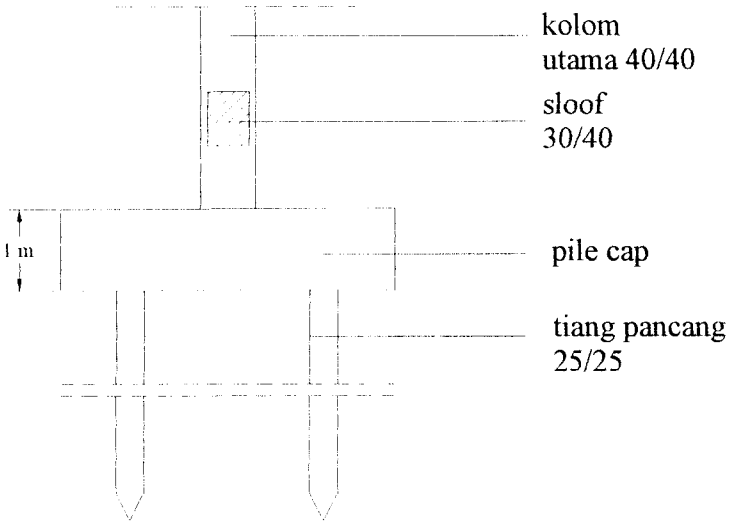

Gambar 4.25 Rencana Pile Cap

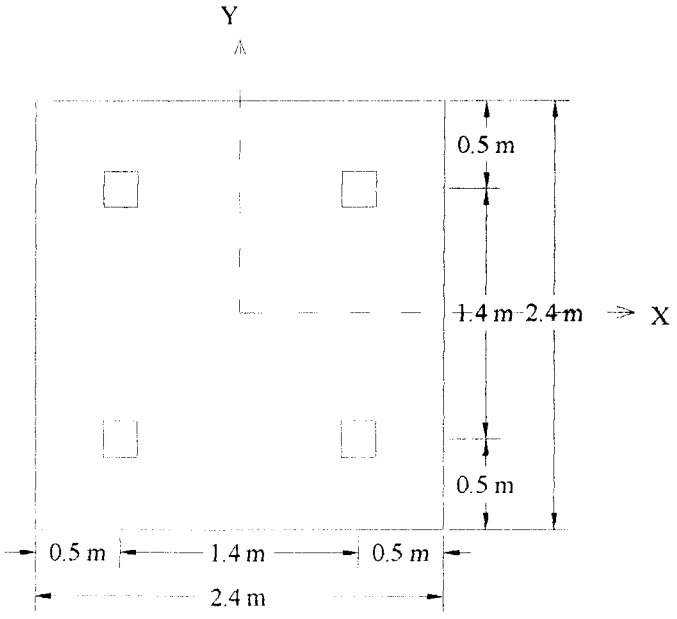

Gambar 4.26 Susunan Kelompok Tiang Pada Pile Cap

$$\sum X^2 = \sum\left(n.\ Xi^2\right) \quad = 4\ .\ 0{,}7^2 = 1{,}96$$

$$\sum Y^2 = \sum\left(n.\ Yi^2\right) \quad = 4\ .\ 0{,}7^2 = 1{,}96$$

Beban yang bekerja pada pile cap :

$$P\max = \frac{\sum P}{n} \pm \frac{Mu,kX}{\sum X^2} \pm \frac{Mu,kY}{\sum Y^2}$$

$$P\max = \frac{1835}{4} + \frac{23{,}61.0{,}7}{1{,}96} + \frac{28{,}16.0{,}7}{1{,}96} = 477 \text{ KN}$$

$$P\min = \frac{1835}{4} - \frac{16{,}53}{1{,}96} - \frac{19{,}71}{1{,}96} = 440\text{KN}$$

perencanaan tebal pile cap

$$D = tp - pb - 0.5\phi tul = 1000 - 80 - ½\ .\ 19 = 910 \text{ mm}$$

Kontrol geser satu arah (geser lentur)

$$Vu(x,y) = n\ tiang\ arah(x,y).P_{max} = 2\ .\ 477 = 954 \text{ KN}$$

$$Vc = \frac{1}{6}\sqrt{fc'}\ .B.D = \frac{1}{6}\sqrt{22{,}5}.2400.910.10^{-3} = 1726 \text{ KN}$$

$$1726 \text{ KN} \geq \frac{Vu}{\phi} = \frac{954}{0{,}6} = 1590 \text{ KN} \quad \text{- OK -}$$

Kontrol geser dua arah (geser pons)

$$\beta_0 = \frac{hc}{bc} = \frac{0{,}4}{0{,}4} = 1$$

$$b_0 = 2.((hc + D) + (bc + D))$$

$$b_0 = 2.((400 + 910) + (400 + 910)) = 5240 \text{ mm}$$

$$Vc1 = \left[1 + \frac{2}{\beta 0}\right].\left[\frac{\sqrt{fc'}}{6}\right].bo\,D$$

$$Vc1 = \left[1+\frac{2}{1}\right].\left[\frac{\sqrt{22,5}}{6}\right].5240.910.10^{-3} = 11309 \text{ KN}$$

$$Vc2 = 0,33\ \sqrt{f'c}\ .bo.D$$

$$Vc2 = 0,33.\sqrt{22,5}.5240.910.10^{-3} = 7464 \text{ KN}$$

$$Vu(x,y) = 2\ .\ 477 = 954 \text{ KN}$$

$$Vc = 4983 \text{ KN} \geq Vu/\phi = \frac{954}{0,6} = 1590 \text{ KN}$$ **.....Ok !**

Perencanaan tulangan

$$Mu = 477\ .\ (0,7-0,2).\ 2 = 477$$

$$\frac{Mu}{\phi} = \frac{477}{0,8} = 596,25 \text{ KNm}$$

Digunakan tulangan pokok $\varnothing_{19}$ mm, maka : $A_{1\varnothing} = 284 mm^2$

Tebal pile cap = 1000 mm, selimut beton (Pb) = 80 mm

$$d = tf - Pb - 0,5.\ \varnothing_{tul.\ pokok} = 1000 - 80 - 0,5.\ 19 = 910 \text{ mm}$$

$$m = \frac{fy}{0,85.f'c} = \frac{360}{0,85.22,5} = 18,82$$

Koefisien ketahanan (Rn), diambil nilai b tiap 1000 mm :

$$Rn = \frac{Mu/\phi}{b.d^2} = \frac{596,25.10^6}{1000.910^2} = 0,72 \text{ MPa}$$

Rasio Tulangan :

$$\rho_{min} = \frac{1,4}{fy} = \frac{1,4}{360} = 0,0038$$

$$\rho b = \frac{0,85.f'c.\beta_1}{fy}.\left(\frac{600}{600+fy}\right) = \frac{0,85.22,5.0,85}{360}.\left(\frac{600}{600+360}\right) = 0,0282$$

$\rho_{mak} = 0{,}75.\ \rho b = 0{,}75.\ 0{,}0244 = 0{,}0211$

$$\rho_{ada} = \frac{1}{m}\left(1-\sqrt{1-\frac{2m.Rn}{fy}}\right)$$

$$= \frac{1}{18{,}82}\left(1-\sqrt{1-\frac{2.18{,}82.0{,}72}{360}}\right) = 0{,}00204 < \rho_{mak} = 0{,}0211$$

$< \rho_{min} = 0{,}0038$

$1{,}33\ .\ 0{,}00204 = 0{,}0027 < \rho_{min} = 0{,}0038$

$\rho_{pakai} = 0{,}0027$

$As_{perlu} = \rho_{pakai}\ .\ b\ .\ d = 0{,}0027\ .\ 1000\ .\ 910 = 2457\ mm^2$

$0{,}002.b.h = 0{,}002.1000.400 = 800mm^2 < As_{perlu}$, maka, $As_{perlu} = 2457\ mm^2$

Jarak antar tulangan :

$$s \le \frac{A_{01}.b}{As_{perlu}} = \frac{284.1000}{2457} = 115\ mm$$

$s \le 2.h = 2\ .600 = 1200\ mm$

$s \le 250\ mm$

→ Dipakai Tulangan Pokok : D_{19} – 100 mm

$$As_{ada} = \frac{A_{10}.1000}{s} = \frac{284.1000}{100} = 2840\ mm^2$$

• Kontrol Kapasitas Lentur Pelat pondasi :

$$a = \frac{As_{ada}.fy}{0{,}85.f'c.b} = \frac{2840.360}{0{,}85.22{,}5.1000} = 53{,}4\ mm$$

$Mn = As_{ada}.fy.\ (d - a/2)$

$= 2840.\ 360\ (910 - {}^{53,4}/_{2})\ .\ 10^{-6}$

$= 903$ KNm $\geq {}^{Mu}/_{\phi} = 596,25$ KNm .....**Ok !**

Perencanaan Tulangan Bagi Pondasi

$As_{bagi} = 0,002.\ b.\ h = 0,002.\ 1000.\ 600 = 1200\ mm^2$

Digunakan tulangan bagi ∅16 mm, maka: $A_{1\varnothing} = 201\ mm^2$

Jarak antar tulangan susut :

$$s \leq \frac{A_{01}.b}{As_{susut}} = \frac{201.1000}{1200} = 167,5\ mm$$

→ **Dipakai Tulangan Susut : P_{12} – 160 mm**

4.7 Perencanaan Tangga

4.7.1 Perencanaan Tangga Entrance

4.7.1.1 Spesifikasi Struktur

1. Tinggi lantai (h) = 4 m = 400 cm
2. Lebar Bordes (LB) = 1,62 m = 162 cm
3. Tinggi optrade rencana diambil 18 cm

   Jumlah Optrade = 400/18 = 22,2 dipakai 22 Buah

   Tinggi Optrade pakai = 400/22 = 18 cm

   Jumlah Antrade = 22 – 2 = 20

   Diambil Panjang Antrade = 40 cm
4. Sudut kemiringan Tangga = 18/40 = arc tg α $\rightarrow$ α = 24,23°
5. Dimensi Tangga

   Panjang Tangga (Lo)

   Lo = (panjang antrade x jumlah antrade/2) + LB

   = (40 x 20/2) + 162 = 562cm

   Lebar bersih tangga = 500 cm
6. Tebal Pelat bordes Diambil 20 cm

   tebal pelat sisi miring (h') = 20 . sin (90-24,23) = 18,24 cm

4.7.2 Pembebanan

1. Pembebanan Bordes

Beban mati

- Berat sendiri pelat = 0,2 .24 = 4,80 KN/m^2
- Berat spesi = 0,03 .24 = 0,72 KN/m^2
- Berat keramik = 0,01 .24 = 0,24 KN/m^2

qD = 5,8 KN/m^2

Beban hidup

QL = 300 kg/m = 3 KN/m^2

Qu = 1,2 qD + 1,6 qL = 1,2 . 5,8 + 1,6 . 3 = 11,76 KN/m^2

Untuk lebar = 1,62 m → qu = 11,76 . 1 = 19,05 KN/m

2. Pembebanan Tangga

Beban mati

- berat sendiri tangga = (0,18 + 0,18/2).24 = 6,54 KN/m^2
- Berat spesi = 0,03 . 24 = 0,72 KN/m^2
- Lantai keramik = 0,01 . 24 = 0,24 KN/m^2

QD = 7,5 KN/m^2

Beban hidup

QL = 300 kg/m = 3 KN/m^2

Qu = 1,2 qD + 1,6 qL = 1,2 . 7,5 + 1,6 . 3 = 13,8 KN/m^2

Untuk lebar = 1 m → qu = 13,8 . 1 = 13,8 KN/m

4.7.3 Penulangan Tangga

Perhitungan analisis struktur tangga menggunakan perhitungan program SAP 2000, data – data perhitungan dapat dilihat pada lampiran.

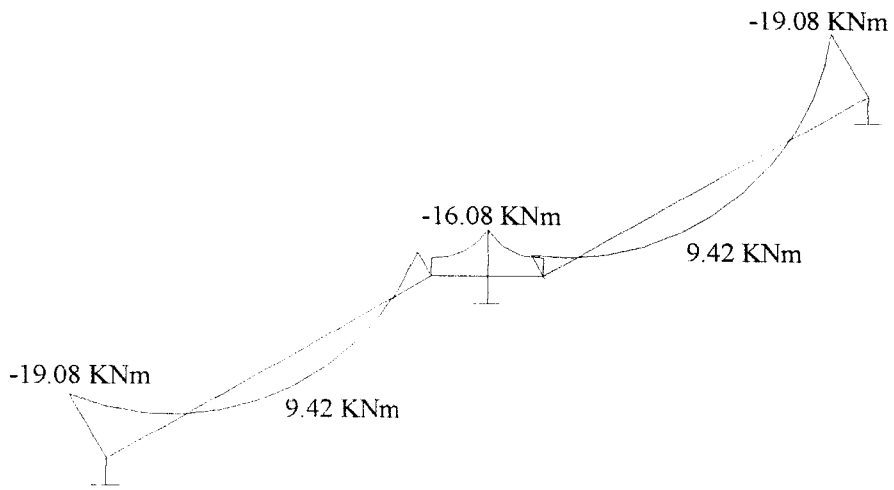

Gambar 4.27 Bidang Momen Tangga Entance

1. **Perhitungan pelat bordes**

Mu maks = 16,08 KNm

$Mu/\phi = \frac{16,08}{0,8} = 20,1$ KNm

Digunakan tulangan ∅10 mm, sehingga luas tampang 1 tulangan pokok :

A1∅ = 79 mm2

Tebal pelat bordes = 200 mm, selimut beton (pb) = 20 mm

d = h – pb – 0,5 ∅tul pokok = 200 – 20 – ½ .10 = 175 mm

$$\rho b = \frac{0,85.f'c}{fy}.\beta_1\left(\frac{600}{600+fy}\right) = \frac{0,85.22,5}{240}.0,85\left(\frac{600}{600+240}\right) = 0,0483$$

$\rho_{maks} = 0,75 \,.\, \rho b = 0,75 \,.\, 0,0483 = 0,0363$

$$\rho_{min} = \frac{1,4}{fy} = \frac{1,4}{240} = 0,0058$$

$\rho_{pakai} = 0,5 \cdot \rho_{maks} = 0,5 \cdot 0,0363 = 0,01815$

$$m = \frac{fy}{0,85.f'c} = \frac{240}{0,85.22,5} = 12,55$$

Koefisien ketahanan (Rn), diambil nilai b tiap 1000 mm

$$Rn = \frac{Mu/\phi}{b.d^2} = \frac{20,1.10^6}{1000.175^2} = 0,66 \text{ MPa}$$

$$\rho_{perlu} = \frac{1}{m}\cdot\left(1-\sqrt{1-\frac{2\cdot m\cdot Rn}{fy}}\right) = \frac{1}{12,55}\cdot\left(1-\sqrt{1-\frac{2\cdot 12,55\cdot 0,66}{240}}\right)$$

$\rho_{perlu} = 0,0028 < \rho_{min} = 0,0058$

$1,33\ \rho_{perlu} = 0,0037 < \rho_{min} = 0,0058$

sehingga ρ pakai = $1,33\ \rho_{perlu} = 0,0037$

As perlu = ρ pakai . b .d $\geq$ 0,002 . b. h

= 0,0037 . 1000 . 175 $\geq$ 0,002 . 1000 . 200

= 648 $mm^2 \geq 400\ mm^2$

As pakai = 648 mm^2

Jarak tulangan : $s \leq \frac{A_1 \cdot b}{As_{perlu}} = \frac{79.1000}{648} = 121,91$mm

$\leq$ 2.h = 2 .200 = 400 mm

$\leq$ 250 mm

Dipakai jarak (s) = 120 mm

Dipakai Tulangan Pokok D10 – 120

As ada = $\frac{A_{1\phi} \cdot b}{s_{terpakai}} = \frac{79.1000}{120} = 658{,}33 \text{ mm}^2$

Kontrol kapasitas lentur pelat bordes:

$$a = \frac{As_{ada} \cdot fy}{0{,}85 \cdot f'c \cdot b} = \frac{658{,}33.240}{0{,}85 \cdot 22{,}5.1000} = 8{,}26 \text{ mm}$$

$$Mn = As_{ada} \cdot fy \cdot \left(d - a/2\right) \geq 1{,}33 Mu/\phi$$

$$= 658{,}33 \cdot 240 \cdot \left(175 - 8{,}26/2\right).10^{-6} \geq 1{,}33.20.1$$

= 26,99 KNm ≥ 26,733 KNm ..... (Ok..!)

Tulangan bagi pelat bordes

As bagi = 0,002 . b .h = 0,002 . 1000 . 200 = 400 mm^2

Digunakan ∅8mm dengan A1∅ = 50 mm^2

Jarak antar tulangan (s) = $\frac{A_{1\Phi}.b}{As.bagi} = \frac{50.1000}{400} = 125$ mm

Dipakai P8-120 mm

2. **Perhitungan Pelat Tangga**

Mu maks = 19,08 KNm

Mu/ϕ = $\frac{19{,}08}{0.8} = 23{,}85$ KNm

Digunakan tulangan ∅10 mm, sehingga luas tampang 1 tulangan pokok :

A1∅ = 79 mm2

Tebal pelat tangga = 18,24 mm, selimut beton (pb) = 20 mm

d = h – pb – 0,5 ∅tul pokok = 182– 20 – ½ .10 = 157 mm

$$\rho b = \frac{0{,}85.f'c}{fy}.\beta_1\left(\frac{600}{600+fy}\right) = \frac{0{,}85.22{,}5}{240}.0{,}85\left(\frac{600}{600+240}\right) = 0{,}0483$$

$\rho_{maks} = 0{,}75 \,.\, \rho b = 0{,}75 \,.\, 0{,}0483 = 0{,}0363$

$$\rho_{min} = \frac{1{,}4}{fy} = \frac{1{,}4}{240} = 0{,}0058$$

$\rho_{pakai} = 0{,}5 \,.\, \rho_{maks} = 0{,}5 \,.\, 0{,}0363 = 0{,}01815$

$$m = \frac{fy}{0{,}85.f'c} = \frac{240}{0{,}85.22{,}5} = 12{,}55$$

Koefisien ketahanan (Rn), diambil nilai b tiap 1000 mm

$$Rn = \frac{Mu/\phi}{b.d^2} = \frac{23{,}85.10^6}{1000.157^2} = 0{,}96 \text{ MPa}$$

$$\rho_{perlu} = \frac{1}{m}\cdot\left(1-\sqrt{1-\frac{2\cdot m\cdot Rn}{fy}}\right) = \frac{1}{12{,}55}\cdot\left(1-\sqrt{1-\frac{2\cdot 12{,}55\cdot 0{,}96}{240}}\right)$$

$\rho_{perlu} = 0{,}0041 < \rho_{min} = 0{,}0058$

$1{,}33\ \rho_{perlu} = 0{,}0055 < \rho_{min} = 0{,}0058$

sehingga ρ pakai = $1{,}33\ \rho_{perlu} = 0{,}0055$

As perlu = ρ pakai . b .d $\geq 0{,}002$. b. h

$= 0{,}0055 \,.\, 1000 \,.\, 157 \geq 0{,}002 \,.\, 1000 \,.\, 182$

$= 863{,}5 \geq 364$

As pakai = 863,5 mm^2

Jarak tulangan : $s \leq \frac{A_1 \cdot b}{As_{perlu}} = \frac{79.1000}{863{,}5} = 91{,}5$ mm

$\leq 2.h = 2\,.182 = 364$ mm

≤ 250 mm

Dipakai jarak (s) = 90 mm

Pembebanan :

- berat pelat bordes = 11,76 . 1,62 = 19,05 KN/m
- berat sendiri = 1,2.0,25.0,45.24 = 3,24 KN/m +

qu = 22,30KN/m

Momen tumpuan :

$$Mu = -\frac{1}{12}qu.L^2 = -\frac{1}{12}.22,30.5,0^2 = -46,46 \text{ KNm}$$

Momen lapangan :

$$Mu = \frac{1}{24}qu.L^2 = \frac{1}{24}.22,30.5,0^2 = 23,23 \text{ KNm}$$

a. Perencanaan tulangan lentur balok bordes

- Tulangan Tumpuan

Mu = 46,46 KNm

$$Mu/\phi = \frac{46,46}{0,8} = 50,1 \text{ KNm}$$

$$\rho b = \frac{0,85.f'c}{fy}.\beta_1\left(\frac{600}{600+fy}\right) = \frac{0,85.22,5}{360}.0,85\left(\frac{600}{600+360}\right) = 0,0282$$

$\rho_{maks} = 0,75 \,.\, \rho b = 0,75 \,.\, 0,0282 = 0,0212$

$$\rho_{min} = \frac{1,4}{fy} = \frac{1,4}{360} = 0,0038$$

$\rho_{pakai} = 0,5 \,.\, \rho_{maks} = 0,5 \,.\, 0,0212 = 0,0106$

$$m = \frac{fy}{0,85.f'c} = \frac{360}{0,85.22,5} = 18,82$$

$Rn = \rho\, fy\, (1 - \frac{1}{2}\rho\, m)$

$= 0,0106 \,.\, 360\, (1 - \frac{1}{2}.0,0106\, .18,82) = 3,43$ MPa

- Tulangan Lapangan

Mu = 23,23 KNm

$$Mu/\phi = \frac{23,23}{0,8} = 29,04 \text{ KNm}$$

$$\rho b = \frac{0,85.f'c}{fy}.\beta_1\left(\frac{600}{600+fy}\right) = \frac{0,85.22,5}{360}.0,85\left(\frac{600}{600+360}\right) = 0,0282$$

$\rho_{maks} = 0,75 \,.\, \rho b = 0,75 \,.\, 0,0282 = 0,0212$

$$\rho_{min} = \frac{1,4}{fy} = \frac{1,4}{360} = 0,0038$$

$\rho_{pakai} = 0,5 \,.\, \rho_{maks} = 0,5 \,.\, 0,0212 = 0,0106$

$$m = \frac{fy}{0,85.f'c} = \frac{360}{0,85.22,5} = 18,82$$

$Rn = \rho\, fy\, (1 - \frac{1}{2}\rho\, m)$

$= 0,0106 \,.\, 360\, (1 - \frac{1}{2}.0,0106\, .18,82)$

$= 3,43$ MPa

$$b.d^2 = \frac{Mu/\phi}{Rn}$$

$$d_{perlu} = \sqrt{\frac{Mu/\phi}{Rn.b}} = \sqrt{\frac{29,04.10^6}{3,43.250}} = 184 \text{ mm} < d = 400 \text{ mm, maka dipakai}$$

tulangan sebelah.

$$Rn_{ada} = \frac{Mu/\phi}{b.d_{ada}^2} = \frac{29,04.10^6}{250.400^2} = 0,73 \text{ MPa}$$

$$\rho_{ada} = \frac{Rn_{ada}}{Rn}\rho = \frac{0,73}{3,43}0,0106 = 0,0022 < \rho_{min} = 0,0038$$

$\rho_{pakai} = \rho_{min} = 0{,}0038$

$As \quad = \rho_{ada}.b.d_{ada} = 0{,}0038 \,.\, 250 \,.\, 400 = 380 \text{ mm}^2$

Dipakai diameter tulangan D16, maka : $A_1\emptyset = 201 \text{ mm}^2$

$$n \quad = \frac{As}{A_1\phi} = \frac{380}{201} = 1{,}89 \text{ batang}$$

Dipakai tulangan memanjang **2D16**, maka :

$As_{ada} = 2 \,.\, 201 = 402\text{mm}^2 > As = 380 \text{ mm}^2$

Kontrol Kapasitas Lentur yang terjadi :

$$a \quad = \frac{As_{ada}\,fy}{0{,}85.f'c\ b} = \frac{402.360}{0{,}85.22{,}5.250} = 30{,}27 \text{ mm}$$

$$Mn \quad = As_{ada}\ fy\,(d - \frac{a}{2}) \ \geq \ Mu/\phi$$

$$= 402 \,.\, 360\ (400 - \frac{30{,}27}{2}).\ 10^{-6} \geq Mu/\phi$$

$$= 55{,}6 \text{ KNm} > Mu/\phi = 29{,}04 \text{ KNm} \qquad \text{(Ok!)}$$

b. Perencanaan tulangan geser balok bordes

Gaya Geser Dukungan

$$\text{Vu dukungan} = \frac{1}{2}.q_U.L$$

$$= \frac{1}{2} \,.\, 22{,}30 \,.\, 5{,}0 \ = 55{,}75 \text{ KN}$$

$$\text{maka } Vu/\phi = \frac{55{,}75}{0{,}6} = 92{,}91 \text{ KN}$$

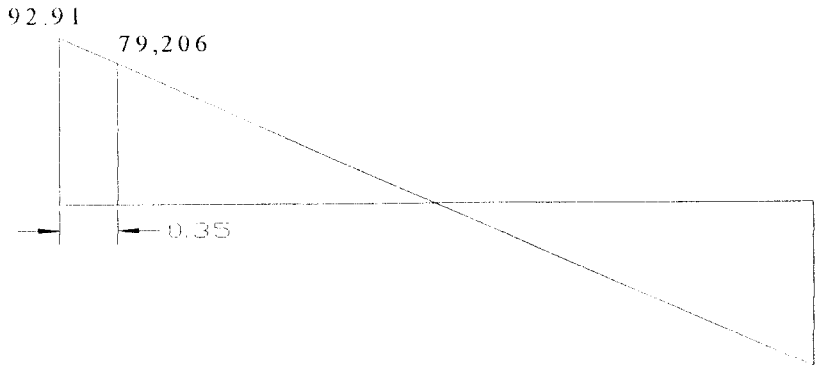

Gambar 4.28 Diagram Geser Balok Bordes

$$\text{Vu pakai} = \left(\frac{2{,}5 - 0{,}35}{2{,}5}\right).92{,}91 = 79{,}206 \text{ KN}$$

Tegangan Geser Beton (Vc) :

$$Vc = \left(\frac{1}{6}\sqrt{fc'}\right).b.d = \left(\frac{1}{6}\sqrt{22{,}5}\right).250.400 = 78174 \text{ N} = 78{,}174 \text{ KN}$$

Vu pakai = 79,206 > *Vc* = 78,174 , maka perlu tulangan geser.

Vs = Vu pakai – Vc = 79,206 – 78,174 = 1,032 KN

Dipakai sengkang P10, maka Av = $2.\frac{1}{4}.\pi.10^2$ = 157 mm^2

Jarak sengkang $s \leq \frac{Av.fy.d}{Vs}$

$$s \leq \frac{157.240.400}{1032}$$

$$s \leq 14604 \text{ mm}$$

$$\leq d/2 = 400/2 = 200 \text{ mm}$$

$$\leq 600 \text{ mm}$$

jadi dipakai sengkang **P10 – 200 mm.**

fy = 360 Mpa

My = 19,08 KNm

Asumsi tebal pelat (tf) = 400 mm

$\sigma_{netto\ tanah} = \sigma_{tanah} - \Sigma(h.\ \gamma_{beton}) - \Sigma(h.\ \gamma_{tanah})$

$= 250 - (0{,}4.24) - (1{,}5.18)$

$= 213\ kN/m^2$

1. Tinjauan Terhadap Beban Tetap

Digunakan pondasi penampang bujur sangkar, dicoba dengan nilai Bx = By = 1,2 m

Luas penampang pelat pondasi :

$A = Bx\ .\ By = 1{,}2 \times 1{,}2 = 1{,}44\ m^2$

Kontrol luas pelat pondasi dan tegangan yang terjadi :

$$\sigma_{terjadi} = \frac{P}{A} \pm \frac{6.My}{Bx^2.By}$$

$$\sigma_{terjadi\ max} = \frac{177{,}84}{1{,}44} + \frac{6.19{,}08}{1{,}2^2.1{,}2}$$

$= 189{,}75\ KN/m^2 < \sigma_{nettotanah} = 213\ KN/m^2$ .....**Ok !**

2. Tinjauan Terhadap Beban Sementara

Eksentrisitas yang terjadi :

$$ex = \frac{My}{P} = \frac{19{,}08}{177{,}84} = 0{,}107\ m$$

$B/6 = 1{,}2/6 = 0{,}2 > ex$ (beban eksentrisitas di dalam teras), maka

Kontrol tegangan yang terjadi :

$$\sigma_{terjadi} = \frac{P}{A}\left(1 + \frac{6.ex}{Bx}\right)$$

$$= \frac{177,84}{1,44}\left(1 + \frac{6.0,107}{1,2}\right)$$

$= 189,5\ KN/m^2 < 1,5.\sigma_{netto} = 1,5.\ 214 = 321\ KN/m^2$ **.....Ok !**

B. Perencananaan Geser Satu Arah

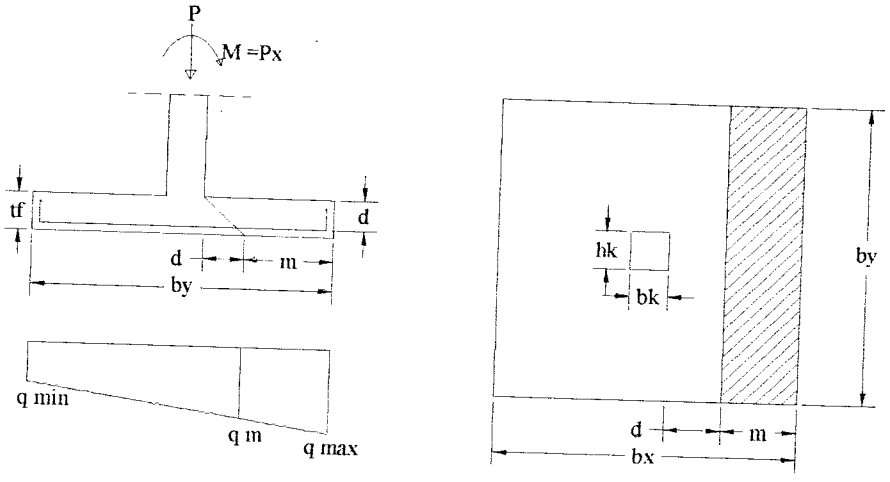

Gambar 4.30 Pondasi Dengan Geser Satu Arah

P = 177,84 KN

My = 19,08 KNm

Jarak pusat tulangan tarik ke serat tekan beton :

$d = tf - Pb - \frac{1}{2}.\varnothing_{tul.\ pokok} = 400 - 70 - \frac{1}{2}.\ 19 = 320,5\ mm = 0,300\ m$

$$m = \frac{Bx - bk - 2.d}{2} = \frac{1,2 - 0,30 - 2.0,30}{2} = 0,15\ m$$

- Tegangan kontak yang terjadi :

$$\sigma_{terjadi} = \frac{P}{A} \pm \frac{6.My}{Bx^2.By}$$

$$\sigma_{terjadi\ max} = \frac{177,84}{1,44} + \frac{6.19,08}{1,2^2.1,2}$$

$$q_{tjd\ mak} = 189,75\ KN/m^2$$

$$q_{tjd\ min} = 57,25\ KN/m^2$$

$$q_{tjd}m = \frac{(q_{tjd\ mak} - q_{tjd\ min}).(Bx - m)}{Bx} + q_{tjd\ min}$$

$$= \frac{(189,75 - 57,25).(1,2 - 0,15)}{1,2} + 57,25$$

$$= 173,2\ KN/m^2$$

Gaya geser akibat beban luar yang bekerja pada penampang kritis pondasi :

$$Vu = q_{tjd}m\ .\ m\ .\ Bx = 173,2.\ 0,15\ .\ 1,2 = 31,2\ KN$$

$$Vu/\phi = 31,2/0,6 = 60\ KN$$

- Kekuatan beton menahan geser:

$$Vc = 1/6.\ \sqrt{f'c}\ .\ Bx.\ d = 1/6.\ \sqrt{22,5}\ 1,2.\ 0,300\ .\ 10^3 = 284\ KN$$

- Kontrol gaya geser :

$$Vc = 284\ KN \geq Vu/\phi = 60\ KN$$ .....**Ok !**

C. Perencananaan Geser Dua Arah

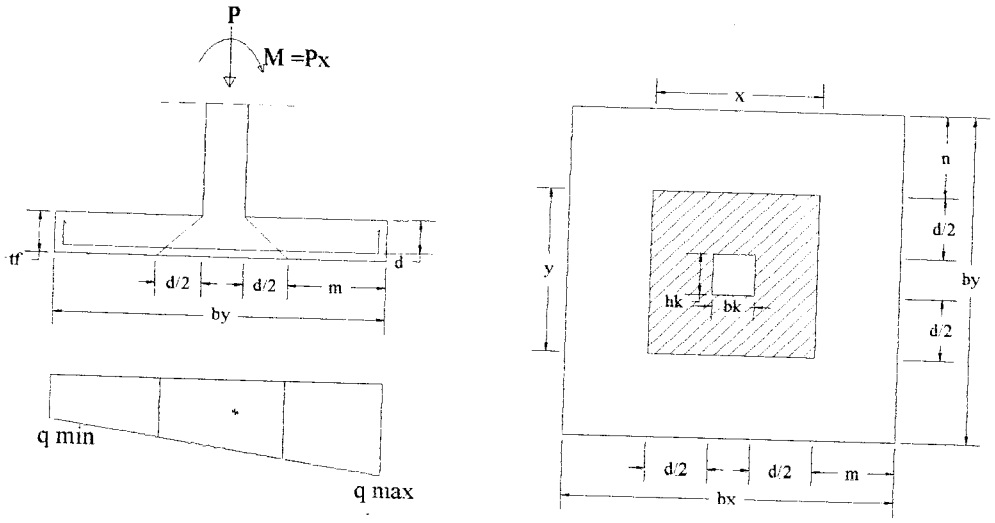

Gambar 4.31 Pondasi dengan geser dua arah

x = bk + d

= 300 + 300

= 600 mm = 0,600 m

y = hk + d

= 300 + 300

= 600 mm = 0,600 m

- Tegangan kontak yang terjadi :

$$q_{\text{terjadi}} = \frac{P}{A} \pm \frac{6.My}{Bx^2.By}$$

$$q_{\text{terjadi max}} = \frac{177,84}{1,44} + \frac{6.19,08}{1,2^2.1,2}$$

$q_{tjd\ mak}$ = 189,75 KN/m^2

$q_{tjd\ min}$ = 57,25 KN/m^2

$q_{tjd\ pakai} = \frac{1}{2}(q_{tjd\ max} + q_{tjd\ min}) = \frac{1}{2}(189{,}75 + 57{,}25) = 123{,}5$ KN/m^2

- Gaya geser akibat beban luar yang bekerja pada penampang kritis pondasi :

$Vu = q_{tjd\ pakai}.\ ((Bx.By) - (x.y))$

$= 123{,}5\ .\ ((1{,}2\ .\ 1{,}2) - (0{,}600.0.600)) = 177{,}48$ KN

$Vu/\phi = 177{,}48/0{,}6 = 295{,}8$ KN

- Kekuatan beton menahan geser :

$\beta c = \frac{sisipanjang}{sisipendek} = \frac{y}{x} = \frac{0{,}60}{0{,}60} = 1$

$bo = 2\ .\ (x + y) = 2\ .\ (600 + 600) = 2400$ mm

$Vc_1 = (1 + 2/\beta c).\frac{\sqrt{f'c}}{6}.\ bo.\ d$

$= (1 + 2/1).\ \frac{\sqrt{22{,}5}}{6}.\ 2400.\ 300.\ 10^{-3} = 1707{,}63$ KN

$Vc_2 = 1/3\ .\ \sqrt{f'c}\ .\ bo.\ d$

$= 1/3.\ \sqrt{22{,}5}\ .\ 2400.\ 300.\ 10^{-3} - 1138{,}42$ KN

$Vc = 1138{,}42$ KN $\geq Vu/\phi = 295{,}8$ KN.....**Ok !**

D. Kuat Tumpuan Pondasi

- Kuat tumpuan Pondasi :

$\phi.Pn = \phi.\ (0{,}85.\ f'c.\ A_1.\ \sqrt{A_2/A_1}\ )$

Luas penampang kolom (A_1) = bk . hk = 0,30. 0,30 = 0,09 m^2

Luas pelat pondasi (A_2) = Bx . By = 1,2 . 1,2 = 1,44 m^2

$\sqrt{\frac{A_2}{A_1}} = \sqrt{\frac{1{,}44}{0{,}09}} = 4 > 2$ (jika lebih besar dari 2, dipakai nilai 2)

$\phi.Pn = \phi.\ (0{,}85.\ f'c.\ A_1.2)$

$= 0{,}7.\ (0{,}85\ .\ 22{,}5\ .\ 0{,}09\ .\ 2).10^3 = 2409{,}75$ KN

- Kuat tumpuan kolom :

$\phi.Pn = \phi.\ (0{,}85.\ f'c.\ A_1)$

$= 0{,}7.\ (0{,}85.\ 22{,}5.\ 0{,}09\ ).10^3 = 1204{,}87$ KN

- Kontrol kuat tumpuan :

$\phi.Pn_{pondasi} = 2409{,}75$ KN > $\phi.Pn_{kolom} = 1204{,}87$ KN **.....Ok !**

E. Perencanaan Tulangan Lentur Pondasi

Karena penampang pondasi berbentuk bujur sangkar, sehingga arah x dan arah y sama panjang, maka perencanaan tulangan lenturnya dianggap sama.

$$L = \frac{Bx - bk}{2} = \frac{1{,}2 - 0{,}30}{2} = 0{,}45 \text{ m}$$

$q_{terjadi} = 189{,}75$ KN/m^2

$Mu = 0{,}5.\ q_{terjadi}.\ L^2 = 0{,}5\ .\ 189{,}75\ .\ 0{,}45^2 = 19{,}2$ KNm

$$Mu/\phi = \frac{19,2}{0,8} = 24 \text{ KNm}$$

- Digunakan tulangan pokok $\varnothing_{16}$ mm, maka : $A_{1\varnothing} = 201 mm^2$
- Tebal pelat pondasi : tf = 400 mm, selimut beton (Pb) = 70 mm

d = tf – Pb – 0,5. $\varnothing_{tul.\ pokok}$ = 400 – 70 – 0,5. 16 = 322 mm

$$m = \frac{fy}{0,85.f'c} = \frac{360}{0,85.22,5} = 18,82$$

Koefisien ketahanan (Rn), diambil nilai b tiap 1000 mm :

$$Rn = \frac{Mu/\phi}{b.d^2} = \frac{24.10^6}{1000.322^2} = 0,23 \text{ MPa}$$

Rasio Tulangan :

$$\rho_{min} = \frac{1,4}{fy} = \frac{1,4}{360} = 0,0038$$

$$\rho b = \frac{0,85.f'c.\beta_1}{fy}.\left(\frac{600}{600+fy}\right) = \frac{0,85.22,5.0,85}{360}.\left(\frac{600}{600+360}\right) = 0,0282$$

ρ_{mak} = 0,75. ρb = 0,75. 0,0244 = 0,0211

$$\rho_{ada} = \frac{1}{m}.\left(1-\sqrt{1-\frac{2m.Rn}{fy}}\right)$$

$$= \frac{1}{18,82}.\left(1-\sqrt{1-\frac{2.18,82.0,23}{360}}\right) = 0,0005 < \rho_{mak} = 0,0211$$

$$< \rho_{min} = 0,0038$$

1,33 . 0,0005 = 0,00066 < ρ_{min} = 0,0038

ρ_{pakai} = 0,00066

$As_{perlu} = \rho_{pakai}$. b . d = 0,00066 . 1000 . 322 = 214 mm^2

$0{,}002.b.h = 0{,}002.1000.400 = 800 mm^2 > As_{perlu}$, maka, $As_{perlu} = 800\ mm^2$

Jarak antar tulangan :

$$s \leq \frac{A_{\theta 1}.b}{As_{perlu}} = \frac{201.1000}{800} = 251\ mm$$

$$s \leq 2.h = 2\ .400 = 800\ mm$$

$$s \leq 250\ mm$$

→ **Dipakai Tulangan Pokok : D_{16} – 250 mm**

$$As_{ada} = \frac{A_{10}.1000}{s} = \frac{201.1000}{250} = 804\ mm^2$$

- Kontrol Kapasitas Lentur Pelat pondasi :

$$a = \frac{As_{ada}.fy}{0{,}85.f'c.b} = \frac{804.360}{0{,}85.22{,}5.1000} = 15{,}13\ mm$$

$$Mn = As_{ada}.fy.\ (d - a/2)$$

$$= 804\ .\ 360\ (322 - 15{,}13/2)\ .\ 10^{-6}$$

$$= 91{,}01\ KNm \geq Mu/\phi = 24\ KNm$$ **.....Ok !**

<u>Perencanaan Tulangan Bagi Pondasi</u>

$As_{bagi} = 0{,}002.\ b.\ h = 0{,}002.\ 1000.\ 400 = 800\ mm^2$

- Digunakan tulangan bagi ∅16 mm, maka: $A_{1\varnothing} = 201\ mm^2$

Jarak antar tulangan bagi :

$$s \leq \frac{A_{\theta 1}.b}{As_{susut}} = \frac{201.1000}{800} = 251\ mm$$

→ **Dipakai Tulangan bagi : P_{16} – 251 mm**

BAB V

PEMBAHASAN

5.1 Umum

Pada gedung bertingkat perlakuan struktur akibat beban menyebabkan terjadinya distribusi gaya. Biasanya untuk mempersingkat hitungan, perencana menganggap elemen – elemen tertentu pada bangunan portal memiliki persamaan gaya. Sehingga hasil perhitungannya sama untuk elemen tersebut.

Spesifikasi bahan yang dipakai pada Tugas Akhir ini, untuk beton dipakai fc' = 22,5 Mpa khusus untuk kolom memekai fc', untuk baja tulangan dengan diameter kurang atau sama dengan 12 mm dipakai mutu baja fy = 240 MPa dan untuk diameter lebih besardari 12 mm dipakai mutu baja fy = 360 MPa.

Pada Tugas Akhir ini digunakan program SAP 2000 untuk perhitungan portal guna mencari momen – momen yang terjadi pada struktur. Hasil momen tersebut dikalikan factor – factor dan momen terfaktor ini yang digunakan sebagai perhitungan perencanaan.

5.2 Atap

Atap pada perencanaan ini menggunakan atap profil baja untuk kuda – kuda utama dan atap rangka kayu untuk kuda – kuda entrance. Kuda – kuda utama menggunakan baja WF 200x150x6x9 mm untuk rafter utama dan baja WF 148x100x6x9 mm untuk rafter sekunder. Sambungan pada puncak kuda – kuda digunakan kombinasi sambungan baut dengan las. Pelat sambungan di las

dipabrik dengan kekuatan las setara dengan kekuatan propil baja, dan baut yang digunakan adalah baut mutu tinggi (Hight Teknologi Baut) dengan Ø 19 mm.

Berikut ini table perbandingan hasil perhitungan konstruksi kuda – kuda dengan perencanaan awal.

No	Uraian	Hasil Perhitungan Penulis	Perencanaan Awal Proyek
1	Profil rafter utama	WF 200x150x6x9	WF 250x125x6x9
2	Profil rafter sekunder	WF 148x100x6x9	WF 148x100x6x9
3	Profil gording	CNP 125x50x20x3.2	CNP 125x50x20x3.2
4	Diameter sagrod	Ø 12 mm	Ø 12 mm

Tabel 5.1 Hasil Perhitungan Kuda – Kuda

5.3 Pelat

Pada bangunan ini terdiri dari pelat lantai dan pelat atap. Perencanaan tipe pelat berdasarkan perbandingan panjang sisi – sisinya dan dukungan pada pelat, sehingga didapatkan tipe pelat dua arah dengan ditumpu keempat sisinya. Perencanaan pelat mengacu pada PBI 1971 tabel 13.3.2.

Tebal pelat lantai direncanakan 120 mm sedangkan pelat talang beton 100 mm. Penentuan tebal pelat lantai dan pelat talang beton didasarkan pada panjang bentang sesuai dengan rumus SK-SNI T-15-1991-03. Pada pelat lantai digunakan tulangan pokok Ø 8 mm dan tulangan bagi Ø 8 mm, sedangkan pada pelat talang beton digunakan tulangan pokok dan susut Ø 8 mm. Mutu baja yang digunakan

pada pelat lantai dan pelat atap adalah fy = 240 MPa, sedangkan mutu betonnya fc' = 22,5 MPa.

Hasil data perhitungan penulis diperoleh jarak tulangan :

1. tulangan lx = tx = P8 – 80 mm
2. tulangan ly = P8 – 100 mm
3. tulangan ty = P8 – 100 mm
4. tulangan bagi tx = P8 – 200 mm
5. tulangan bagi ty = P8 – 200 mm

Sedangakan jarak tulangan berdasarkan gambar rencana awal adalah:

1. tulangan lx = tx = P8 – 150 mm
2. tulangan ly = P8 – 150 mm
3. tulangan ty = P8 – 150 mm
4. tulangan bagi tx = P8 – 200 mm
5. tulangan bagi ty = P8 – 200 mm

Dari data tersebut diketahui bahwa jarak tulangan hasil perhitungan penulis lebih rapat dari pada jarak tulangan menurut gambar rencana, hal tersebut sangat mungkin terjadi karena pada perhitungan penulis balok – balok pendukung yang digunakan untuk menahan dinding – dinding partisi tidak dihitung oleh penulis. Dinding – dinding partisi tersebut menurut penulis tidak perlu didukung oleh balok – balok praktis tetapi pelat lantai cukup kuat untuk menahan beban partisi tersebut.

Akibat beban partisi yang langsung diterima oleh pelat lantai mengakibatkan jarak tulangan pelat lantai lebih rapat, tetapi balok – balok pendukung tidak perlu lagi dipergunakan.

5.4 Balok

Balok merupakan struktur portal sehingga direncanakan berdasarkan analisis portal. Pada perencanaan ini didapat penulangan yang menggunakan tulangan sebelah. Penentuan balok tersebut merupakan tulangan sebelah atau rangkap dapat ditinjau dari tinggi efektif dari balok. Apabila tinggi efektif balok yang direncanakan lebih besar dari tinggi efektif balok yang diperlukan, maka balok tersebut menggunakan tulangan sebelah. Dan apabila tinggi efektif balok yang direncanakan lebih kecil dari tinggi efektif balok yang diperlukan, maka balok tersebut menggunakan tulangan rangkap. Spesifikasi bahan yang digunakan adalah fc' = 22,5 MPa, fy = 360 MPa untuk tulangan ulir dan fy = 240 MPa untuk tulangan polos. Tulangan pokok yang digunakan adalah Ø 19 mm untuk ukuran balok 350/550 mm dan balok 300/400 mm, sedangkan ukuran balok 250/400 menggunakan Ø 16 mm, sedangkan tulangan geser menggunakan Ø 10 mm.

Berikut ini table perbandingan dimensi dan tulangan balok tumpuan antara hasil perhitungan penulis dengan gambar rencana awal :

perhitungan penulis				data gambar rencana			
dimensi	tul memanjang		tul geser pd sd plst	dimensi	tul memanjang		tul geser pd sd plst
	atas	bawah			atas	bawah	
BALOK ANAK				**BALOK ANAK**			
250/400	5D16	2D16	P10-170	250/300	3D16	2D16	tdk ada data
250/400	4D16	2D16	P10-170				

Berikut ini adalah table hasil perhitungan tulangan kolom :

Nama kolom	LT. Dasar (400/400)		LT.I (400/400)		LT.II (400/400)		LT.III (300/300)	
	tulangan utama	tulangan geser	tulangan utama	tulangan geser	tulangan utama	tulangan geser	tulangan utama	tulangan geser
I. Kolom As-7/As-12								
A-7/A-12	8D22	P10-80	8D22	P10-80	8D22	P10-80	4D22	P10-80
B-7/B-12	16D22	P10-80	16D22	2P10-80	16D22	2P10-80	4D22	P10-80
C-7/C-12	16D22	P10-60	16D22	2P10-80	16D22	2P10-100	4D22	P10-80
D-7/D12	16D22	2P10-100	16D22	2P10-100	16D22	2P10-100	4D22	P10-80
E-7/E-12	16D22	P10-60	16D22	2P10-100	16D22	2P10-100	4D22	P10-80
F-7/F-12	16D22	2P10-100	16D22	2P10-100	16D22	2P10-100	4D22	P10-80
G-7/G-12	8D22	P10-80	16D22	P10-80	16D22	P10-60	4D22	P10-80
II. Kolom As-8/As-11								
A-8/A-11	12D22	P10-80	12D22	P10-80	12D22	2P10-100	4D22	P10-80
B-8/B-11	20D22	2P10-80	16D22	2P10-80	16D22	2P10-80	4D22	P10-80
C-8/C-11	20D22	2P10-80	16D22	2P10-60	16D22	2P10-60	4D22	P10-80
D-8/D11	20D22	2P10-80	16D22	2P10-60	16D22	2P10-60	4D22	P10-80
E-8/E-11	20D22	2P10-80	16D22	2P10-60	16D22	2P10-60	4D22	P10-80
F-8/F-11	20D22	2P10-80	16D22	2P10-60	16D22	2P10-60	4D22	P10-80
G-8/G-11	16D22	P10-60	16D22	P10-60	16D22	2P10-100	4D22	P10-80
II. Kolom As-9/As-10								
A-9/A-10	12D22	P10-60	12D22	P10-60	12D22	P10-60		
B-9/B-10	20D22	2P10-60	16D22	P10-60	16D22	P10-80		
C-9/C-10	20D22	2P10-60	16D22	P10-60	16D22	P10-80		
D-9/D10	20D22	2P10-60	16D22	P10-80	16D22	P10-80		
E-9/E-10	20D22	2P10-60	16D22	2P10-80	16D22	2P10-100		
F-9/F-10	20D22	2P10-60	16D22	P10-60	16D22	P10-80		
G-9/G-10	20D22	P10-60	12D22	P10-60	12D22	P10-80		

Tabel 5.3 Tabel Hasil Perhitungan Tulangan Kolom

5.6 Pondasi

Pondasi direncanakan dengan menggunakan pondasi dalam dengan menggunakan tiang pancang. Tiang pancang yang digunakan adalah tiang pabrikasi dengan bentuk tiang segi empat, panjang setiap sisi 20 mm. Dari hasil sondir disimpulkan tanah keras mulai ditemukan pada kedalaman 5 meter dan untuk perencanaan digunakan kedalaman pemancangan tiang 6 meter.

Pada perencanaan pile cap dimensi yang digunakan adalah 2400 mm x2400 mm dengan f'c 22.5 mpa dan fy 360 mpa. Tulangan pokok yang digunakan adalah Ø 19 mm dan tulangan bagi yang digunakan adalah Ø 16 mm.

Uraian	Perhitungan penulis	Data Gambar Rencana
Dimensi Tiang Pancang	200 x 200 mm	200 x 200 mm
Dimensi Pile Cap	2400 x 2400 mm	2400 x 2400 mm
Tulangan Pokok	Tp19-100	Tp12-150
Tulangan Bagi	Tb16-160	Tb12-150

Tabel 5.4 Perbandingan Pondasi Perhitungan Penulis Dengan Data Gambar Rencana

5.7 Tangga

Perencanaan tangga terdiri dari perencanaan pelat tangga, pelat bordes, balok bordes, balok bordes dan pondasi tangga. Tinggi optrede pada tangga entrance berdasarkan perhitungan adalah 18 cm dan panjang antrede 30cm dengan sudut kemiringan tangga 24.23 °. Perencanaan tangga menggunakan tulangan pokok Ø 13 mm dan tulangan bagi Ø 8 mm.

BAB VI

KESIMPULAN DAN SARAN

6.1 Kesimpulan

Berdasarkan hasil perhitungan dan pembahasan pada bab-bab sebelumnya dapat diambil kesimpulan sebagai berikut :

1. Perencanaan konstruksi meliputi :
   - Perencanaan menggunakan metode tegangan kerja *(working design method)*.
   - Perencanaan pelat menggunakan metode koefisien momen dengan menganggap tumpuan tepi jepit elastis sehingga didapat koefisien momen dari tabel 13.3.2.PBI 1971.
   - Perencanaan portal dengan daktilitas penuh meliputi balok dan kolom direncanakan berdasarkan SK SNI T-15-1991-03.
2. Dalam perencanaan beton bertulang pemilihan dimensi sangat berpengaruh terhadap besarnya tulangan yang digunakan, dimensi yang terlalu besar mengakibatkan luas tulangan yang digunakan akan besar dan hal ini akan sangat berpengaruh terhadap biaya proyek.
3. Pada perencanaan pelat, balok – balok sederhana untuk mendukung dinding partisi apabila dihilangkan akan mengakibatkan luasan tulangan perlu As perlu pelat lantai akan menjadi lebih besar.

DAFTAR PUSTAKA

AISC, *Load and Resistance Factor Design Specification*, American Institute of Steel Construction Inc, Chicago, 1999.

Asroni, Ali, *Konstruksi Kayu I* ,Jurusan Teknik Sipil Universitas Muhammadiyah Surakarta, Surakarta , 1994

A. Kadir Aboe, Ir,MS. *Diktat Kuliah Struktur Beton-1*, Jurusan Teknik Sipil Universitas Islam Indonesia, Yogyakarta, 2000.

Chu-Kia Wang, Charles G. Salmon, *Disain Beton Bertulang*, Edisi Keempat, Jilid 2, Erlangga, Jakarta, 1989.

Chu-Kia Wang, Charles G. Salmon, *Disain Beton Bertulang*, Edisi Keempat, Jilid 1, Erlangga, Jakarta, 1993.

Direktorat Penyelidikan Masalah Bangunan, *Peraturan Beton Bertulang Indonesia 1971 N.I.-2*, Departemen Pekerjaan Umun, Bandung, 1971.

Direktorat Penyelidikan Masalah Bangunan,, *Peraturan Pembebanan Indonesia Untuk Gedung*, Departemen Pekerjaan Umum, Bandung, 1983.

Direktorat Penyelidikan Masalah Bangunan,, *Pedoman Perencanaan Tahan Gempa Indonesia Untuk Rumah dan Gedung SKBI-1.3.53.1987*, Departemen Pekerjaan Umum, Jakarta, 1987.

Direktorat Penyelidikan Masalah Bangunan,, *Tata Cara Perhitungan Struktur BetonUntuk Bangunan Gedung SK SNI T-15-1971-03*, Bandung, 1971.

Edward G Nawi, *Beton Bertulang*, Refika Aditama, Bandung, 1998.

Fatkhurrahman. NS, Ir. MT, *Diktat Kuliah Struktur Beton* , Jurusan Teknik Sipil Universitas Islam Indonesia, Yogyakarta, 2000.

Fatkhurrahman, Ns, Ir, MT, *Hand Out Struktur Kayu Batang Tekan*, Jurusan Teknik Sipil Universitas Islam Indonesia, Yogyakarta, 2003

Gideon Kusuma, Takim Adriono, *Desain Struktur Rangka Beton Bertulang Di Daerah Rawan Gempa*, Erlangga, Jakarta, 1993.

Gunawan, Rudy, Ir, Morisco, Ir, *Tabel Profil Konstruksi Baja*, Penerbit Kanisius, Yogyakarta, 1987.

Gunawan ,Ir, Margaret , Ir, *Diktat Teori Soal dan Penyelesaian Konstruksi Baja II Jilid I*, Delta Teknik Group Jakarta, 2003.

Ilman Noor, Ir, MSCE, *Catatan Kuliah Struktur Beton 1 & 2.*

Ilman Noor, Ir, MSCE, *Catatan Kuliah Struktur Baja 1.*

Istimawan Dipohusodo, *Struktur Beton Bertulang*, Gramedia Pustaka Utama, Jakarta, 1994.

Natsir, M , *Tugas Akhir Desain Ulang Struktur Gedung Fakultas Hukum Universitas Inslam Indonesia*, Yogyakarta, 2003

Purwanto, Edy, Ir, DEA, *Diktat Kuliah Struktur Pondasi Dalam.*

Salmon, C.G., Jhonson, J.E., *Struktur Baja-Desain dan Perilaku*, Jilid I, Gramedia Pustaka Utama, Jakarta, 1996.

Sukardi, Wandoyo, *Tugas Akhir Perancangan Gedung Pertokoan Simpang Lima Semarang*, Yogyakarta,1990

Wakhyudi, *Tugas Akhir Redesain Gedung Pimpinan Muhammadiyah Semarang*, Yogyakarta,2003

LAMPIRAN 1

TABEL PERHITUNGAN PELAT LANTAI

Lampiran 1

Tabel Penulangan Pelat Lantai

Beban Hidup = 2,5 KN/m2 | f'c = 22,5 Mpa | h = 120 mm | d (lx=ly=ty) = 96 mm

Beban Mati = 4,65 KN/m2 | fy = 240 Mpa | b = 1000 mm | d ly = 88 mm

qu = 11.98 KN/m2 | ρb = 20 mm | Φ = 0,8 | β = 0,85

Untuk Pelat dengan:	Type I			Type II			Type III		
lx	3	3	3	3	3	3	3	3	3
ly	5	5	5	5	5	5	5	5	5
ly/lx	1.67	1.67	1.67	1.67	1.67	1.67	1.67	1.67	1.67
clx = ctx	77.4	77.4	77.4	75.8	75.8	75.8	58.7	58.7	58.7
cly = cty	50.3	50.3	50.3	51.0	51.0	51.0	36.0	36.0	36.0
Mlx = 0,001.qu.lx2. clx	8.345	8.345	8.345	8.173	8.173	8.173	6.329	6.329	6.329
Mtx = 0,001.qu.lx2. ctx	-8.345	-8.345	-8.345	-8.173	-8.173	-8.173	-6.329	-6.329	-6.329
Mly = 0,001.qu.lx2. cly	5.423	5.423	5.423	5.499	5.499	5.499	3.882	3.882	3.882
Mty = 0,001.qu.lx2. cty	-5.423	-5.423	-5.423	-5.499	-5.499	-5.499	-3.882	-3.882	-3.882
Tulangan	**lx = tx**	**ly**	**ly**	**lx = tx**	**ly**	**ly**	**lx = tx**	**ly**	**ly**
Rn = (Mu/Φ)/(b.d2)	1.132	0.736	0.875	1.109	0.746	0.888	0.858	0.526	0.627
m = fy/(0,85.f'c)	12.55	12.55	12.55	12.55	12.55	12.55	12.55	12.55	12.55
ρ perlu=(1/m).(1-(1-2m.Rn/fy)^0,5)	0.0049	0.0031	0.0037	0.0048	0.0032	0.0038	0.0037	0.0022	0.0027
ρb =(0,85.f'c.β/fy).(600/(600+fy))	0.0484	0.0484	0.0484	0.0484	0.0484	0.0484	0.0484	0.0484	0.0484
ρ maks = 0,75 ρb	0.0363	0.0363	0.0363	0.0363	0.0363	0.0363	0.0363	0.0363	0.0363
ρ min = 1,4/fy	0.0058	0.0058	0.0058	0.0058	0.0058	0.0058	0.0058	0.0058	0.0058
1,33 ρ perlu	0.0065	0.0042	0.0050	0.0063	0.0042	0.0050	0.0049	0.0030	0.0035
ρ terpakai	0.0058	0.0042	0.0050	0.0058	0.0042	0.0050	0.0049	0.0030	0.0035
As perlu =ρ terpakai.b.h	560.0	399.2	437.2	560.0	404.8	443.4	467.4	284.0	310.7
As perlu ≥ 0,002.b.h	240	240	240	240	240	240	240	240	240
As pakai	560	400	440	560	410	450	500	300	350
Tul D 8mm	50.27	50.27	50.27	50.27	50.27	50.27	50.27	50.27	50.27
Jrk Tul (S)=A1Ø.b/As pakai	89.8	125.7	114.2	89.8	122.6	111.7	100.5	167.6	143.6
Syarat S ≤ 2.h	240	240	240	240	240	240	240	240	240
Syarat S ≤ 250	250	250	250	250	250	250	250	250	250
dipakai S	80	120	100	80	120	110	100	160	140
As ada = A1Ø.b/ S pakai	628	419	503	628	419	457	503	314	359
Kontrol Kap Momen (Mn)									
a=As ada.fy/(0,85f'c.b)	7.88	5.26	6.31	7.88	5.26	5.73	6.31	3.94	4.51
Mn= As ada.fy.(d-(0,5a))	13.88	9.39	10.24	13.88	9.39	9.34	11.20	7.09	7.39
Mu= 1,33Mu/Φ	13.87	9.02	9.02	13.59	9.14	9.14	10.52	6.45	6.45
Cek aman	Aman	Aman	Aman	Aman	Aman	Aman	Aman	Aman	Aman
Dipakai Tul	**P8-80**	**P8-120**	**P8-100**	**P8-80**	**P8-120**	**P8-110**	**P8-100**	**P8-160**	**P8-140**
Tul Bagi	**tx**	**ty**		**tx**	**ty**		**tx**	**ty**	
As bagi = 0,002.b.h	240	240		240	240		240	240	
S bagi = A1Ø.b/As bagi	209.44	209.44		209.44	209.44		209.44	209.44	
Dipakai tul	**P8-200**	**P8-200**		**P8-200**	**P8-200**		**P8-200**	**P8-200**	

LAMPIRAN 2

TABEL PERHITUNGAN KUDA – KUDA ENTRANCE

Lampiran 2

PERHITUNGAN KUDA -KUDA ENTRANCE

1. Kuat Gaya Tarik

Gaya tarik maksimum pada batang	1217	kg
Konstruksi terlindung (β)	1	
Beban permanaen (γ)	1	
Dimensi penampang (batang ganda)		
b	6	cm
h	12	cm
A (luas penampang 1 batang)	72	cm2
kelas kuat kayu	II	
σ//ijin	85	kg/cm2
σ// terjadi	8.451389	kg/cm3

2. Sambungan Gaya Tarik

diameter baut = 1/2 inch	1.27	cm
sambungan tampang II golongan II		
S1 = 100*d*m	762	kg/baut
S2 = 200*d*l	1524	kg/baut
S3 = 430*d^2	693.547	kg/baut
Sr dipakai	762	kg/baut
Jumlah baut = P/Sr	1.597113	
Jumlah baut dipakai	2	baut

3. Sambungan Join

Join 5

sambungan tampang II golongan II		
diameter baut = 1/2 inch	1.27	cm
batang F9 α = 60		
P batang F9	222	kg
S1 = 100*d*m*(1-0.6 sin 60)	731.52	kg/baut
S2 = 200*d*m*(1-0.6 sin 60)	1463.04	kg/baut
S3 = 430*d^2 (1-0.35 sin 60)	482.7087	kg/baut
Sr dipakai	482.7087	kg/baut
Jumlah baut = P/Sr	0.459905	
Jumlah baut dipakai	1	baut

LAMPIRAN 3

TABEL PERHITUNGAN TULANGAN BALOK

PERHITUNGAN TULANGAN BALOK ANAK

Dimensi Balok Anak = 250 x 400 mm

fc' = 22.5 mpa

fy = 360 mpa

Lantai 1

Lampiran 3

FRM		Mu KNm	Mu/ϕ KNm	ρb	ρ maks	ρ min	ρ pakai	m mm	Rn perlu	d perlu mm	d pakai mm	Tul Pakai	Rn baru	ρ baru	ρ pakai	Asperlu mm2	Ø mm	A Ø mm2	n	Tul Pakai	As ada mm2	a mm	Mn KNm	Cek
192	T	74.1	92.6	0.0282	0.0212	0.0039	0.0106	18.82	3.43	329	340	T Seb	3.21	0.0099	0.0099	840	16	201	4.2	5	1005	75.7	109	Oke
	L	46.3	57.9	0.0282	0.0212	0.0039	0.0106	18.82	3.43	260	340	T Seb	2.00	0.0062	0.0062	525	16	201	2.6	3	602.9	45.4	69	Oke
193	T	69.5	86.9	0.0282	0.0212	0.0039	0.0106	18.82	3.43	318	340	T Seb	3.01	0.0093	0.0093	788	16	201	3.9	4	803.8	60.5	90	Oke
	L	36.7	45.9	0.0282	0.0212	0.0039	0.0106	18.82	3.43	231	340	T Seb	1.59	0.0049	0.0049	416	16	201	2.1	3	602.9	45.4	69	Oke
194	T	68.2	85.3	0.0282	0.0212	0.0039	0.0106	18.82	3.43	315	340	T Seb	2.95	0.0091	0.0091	774	16	201	3.8	4	803.8	60.5	90	Oke
	L	37.7	47.1	0.0282	0.0212	0.0039	0.0106	18.82	3.43	234	340	T Seb	1.63	0.0050	0.0050	428	16	201	2.1	3	602.9	45.4	69	Oke
195	T	69.3	86.6	0.0282	0.0212	0.0039	0.0106	18.82	3.43	318	340	T Seb	3.00	0.0092	0.0092	786	16	201	3.9	4	803.8	60.5	90	Oke
	L	36.6	45.8	0.0282	0.0212	0.0039	0.0106	18.82	3.43	231	340	T Seb	1.58	0.0049	0.0049	415	16	201	2.1	3	602.9	45.4	69	Oke
196	T	74.9	93.6	0.0282	0.0212	0.0039	0.0106	18.82	3.43	330	340	T Seb	3.24	0.0100	0.0100	850	16	201	4.2	5	1005	75.7	109	Oke
	L	46.4	58.0	0.0282	0.0212	0.0039	0.0106	18.82	3.43	260	340	T Seb	2.01	0.0062	0.0062	526	16	201	2.6	3	602.9	45.4	69	Oke
236	T	74.4	93.0	0.0282	0.0212	0.0039	0.0106	18.82	3.43	329	340	T Seb	3.22	0.0099	0.0099	844	16	201	4.2	5	1005	75.7	109	Oke
	L	46.6	58.3	0.0282	0.0212	0.0039	0.0106	18.82	3.43	261	340	T Seb	2.02	0.0062	0.0062	529	16	201	2.6	3	602.9	45.4	69	Oke
237	T	69.8	87.3	0.0282	0.0212	0.0039	0.0106	18.82	3.43	319	340	T Seb	3.02	0.0093	0.0093	792	16	201	3.9	4	803.8	60.5	90	Oke
	L	36.6	45.8	0.0282	0.0212	0.0039	0.0106	18.82	3.43	231	340	T Seb	1.58	0.0049	0.0049	415	16	201	2.1	3	602.9	45.4	69	Oke
238	T	68.1	85.1	0.0282	0.0212	0.0039	0.0106	18.82	3.43	315	340	T Seb	2.95	0.0091	0.0091	772	16	201	3.8	4	803.8	60.5	90	Oke
	L	37.7	47.1	0.0282	0.0212	0.0039	0.0106	18.82	3.43	234	340	T Seb	1.63	0.0050	0.0050	428	16	201	2.1	3	602.9	45.4	69	Oke
239	T	68.5	85.6	0.0282	0.0212	0.0039	0.0106	18.82	3.43	316	340	T Seb	2.96	0.0091	0.0091	777	16	201	3.9	4	803.8	60.5	90	Oke
	L	36.5	45.6	0.0282	0.0212	0.0039	0.0106	18.82	3.43	231	340	T Seb	1.58	0.0049	0.0049	414	16	201	2.1	3	602.9	45.4	69	Oke
240	T	75.3	94.1	0.0282	0.0212	0.0039	0.0106	18.82	3.43	331	340	T Seb	3.26	0.0100	0.0100	854	16	201	4.2	5	1005	75.7	109	Oke
	L	46.6	58.3	0.0282	0.0212	0.0039	0.0106	18.82	3.43	261	340	T Seb	2.02	0.0062	0.0062	529	16	201	2.6	3	602.9	45.4	69	Oke
258	T	75.1	93.9	0.0282	0.0212	0.0039	0.0106	18.82	3.43	331	340	T Seb	3.25	0.0100	0.0100	852	16	201	4.2	5	1005	75.7	109	Oke
	L	46.6	58.3	0.0282	0.0212	0.0039	0.0106	18.82	3.43	261	340	T Seb	2.02	0.0062	0.0062	529	16	201	2.6	3	602.9	45.4	69	Oke
259	T	70.2	87.8	0.0282	0.0212	0.0039	0.0106	18.82	3.43	320	340	T Seb	3.04	0.0094	0.0094	796	16	201	4.0	4	803.8	60.5	90	Oke
	L	36.7	45.9	0.0282	0.0212	0.0039	0.0106	18.82	3.43	231	340	T Seb	1.59	0.0049	0.0049	416	16	201	2.1	3	602.9	45.4	69	Oke
260	T	67.7	84.6	0.0282	0.0212	0.0039	0.0106	18.82	3.43	314	340	T Seb	2.93	0.0090	0.0090	768	16	201	3.8	4	803.8	60.5	90	Oke
	L	37.7	47.1	0.0282	0.0212	0.0039	0.0106	18.82	3.43	234	340	T Seb	1.63	0.0050	0.0050	428	16	201	2.1	3	602.9	45.4	69	Oke
261	T	68.0	85.0	0.0282	0.0212	0.0039	0.0106	18.82	3.43	315	340	T Seb	2.94	0.0091	0.0091	771	16	201	3.8	4	803.8	60.5	90	Oke
	L	36.6	45.8	0.0282	0.0212	0.0039	0.0106	18.82	3.43	231	340	T Seb	1.58	0.0049	0.0049	415	16	201	2.1	3	602.9	45.4	69	Oke
262	T	75.7	94.6	0.0282	0.0212	0.0039	0.0106	18.82	3.43	332	340	T Seb	3.27	0.0101	0.0101	859	16	201	4.3	5	1005	75.7	109	Oke
	L	46.5	58.1	0.0282	0.0212	0.0039	0.0106	18.82	3.43	260	340	T Seb	2.01	0.0062	0.0062	527	16	201	2.6	3	602.9	45.4	69	Oke
280	T	75.3	94.1	0.0282	0.0212	0.0039	0.0106	18.82	3.43	331	340	T Seb	3.26	0.0100	0.0100	854	16	201	4.2	5	1005	75.7	109	Oke
	L	46.4	58.0	0.0282	0.0212	0.0039	0.0106	18.82	3.43	260	340	T Seb	2.01	0.0062	0.0062	526	16	201	2.6	3	602.9	45.4	69	Oke
281	T	70.4	88.0	0.0282	0.0212	0.0039	0.0106	18.82	3.43	320	340	T Seb	3.04	0.0094	0.0094	798	16	201	4.0	4	803.8	60.5	90	Oke
	L	36.7	45.9	0.0282	0.0212	0.0039	0.0106	18.82	3.43	231	340	T Seb	1.59	0.0049	0.0049	416	16	201	2.1	3	602.9	45.4	69	Oke

PERHITUNGAN TULANGAN BALOK ANAK

Dimensi Balok Anak = 250 x 400 mm

fc' = 22.5 mpa

fy = 360 mpa

Lampiran 4

Lantai 2

FRM		Mu KNm	Mu/ϕ KNm	ρb	ρ maks	ρ min	ρ pakai	m mm	Rn perlu	d perlu mm	d pakai mm	Tul Pakai	Rn baru	ρ baru	ρ pakai	Asperlu mm2	Ø mm	A Ø mm2	n	Tul Pakai	As ada mm2	a mm	Mn KNm	Cek
282	T	68.0	85.0	0.0282	0.0212	0.0039	0.0106	18.82	3.43	315	340	T Seb	2.94	0.0091	0.0091	771	16	201	3.8	4	803.8	60.5	90	Oke
	L	37.8	47.3	0.0282	0.0212	0.0039	0.0106	18.82	3.43	235	340	T Seb	1.63	0.0050	0.0050	429	16	201	2.1	3	602.9	45.4	69	Oke
283	T	70.3	87.9	0.0282	0.0212	0.0039	0.0106	18.82	3.43	320	340	T Seb	3.04	0.0094	0.0094	797	16	201	4.0	4	803.8	60.5	90	Oke
	L	36.6	45.8	0.0282	0.0212	0.0039	0.0106	18.82	3.43	231	340	T Seb	1.58	0.0049	0.0049	415	16	201	2.1	3	602.9	45.4	69	Oke
284	T	75.9	94.9	0.0282	0.0212	0.0039	0.0106	18.82	3.43	333	340	T Seb	3.28	0.0101	0.0101	861	16	201	4.3	5	1005	75.7	109	Oke
	L	46.4	58.0	0.0282	0.0212	0.0039	0.0106	18.82	3.43	260	340	T Seb	2.01	0.0062	0.0062	526	16	201	2.6	3	602.9	45.4	69	Oke
384	T	53.9	67.4	0.0282	0.0212	0.0039	0.0106	18.82	3.43	280	340	T Seb	2.33	0.0072	0.0072	611	16	201	3.0	4	803.8	60.5	90	Oke
	L	45.3	56.6	0.0282	0.0212	0.0039	0.0106	18.82	3.43	257	340	T Seb	1.96	0.0060	0.0060	514	16	201	2.6	3	602.9	45.4	69	Oke
385	T	75.0	93.8	0.0282	0.0212	0.0039	0.0106	18.82	3.43	331	340	T Seb	3.24	0.0100	0.0100	851	16	201	4.2	5	1005	75.7	109	Oke
	L	45.1	56.4	0.0282	0.0212	0.0039	0.0106	18.82	3.43	256	340	T Seb	1.95	0.0060	0.0060	512	16	201	2.5	3	602.9	45.4	69	Oke
386	T	74.9	93.6	0.0282	0.0212	0.0039	0.0106	18.82	3.43	330	340	T Seb	3.24	0.0100	0.0100	850	16	201	4.2	5	1005	75.7	109	Oke
	L	45.0	56.3	0.0282	0.0212	0.0039	0.0106	18.82	3.43	256	340	T Seb	1.95	0.0060	0.0060	510	16	201	2.5	3	602.9	45.4	69	Oke
387	T	76.0	95.0	0.0282	0.0212	0.0039	0.0106	18.82	3.43	333	340	T Seb	3.29	0.0101	0.0101	862	16	201	4.3	5	1005	75.7	109	Oke
	L	45.2	56.5	0.0282	0.0212	0.0039	0.0106	18.82	3.43	257	340	T Seb	1.96	0.0060	0.0060	513	16	201	2.6	3	602.9	45.4	69	Oke
404	T	53.7	67.1	0.0282	0.0212	0.0039	0.0106	18.82	3.43	280	340	T Seb	2.32	0.0072	0.0072	609	16	201	3.0	4	803.8	60.5	90	Oke
	L	45.2	56.5	0.0282	0.0212	0.0039	0.0106	18.82	3.43	257	340	T Seb	1.96	0.0060	0.0060	513	16	201	2.6	3	602.9	45.4	69	Oke
405	T	76.2	95.3	0.0282	0.0212	0.0039	0.0106	18.82	3.43	333	340	T Seb	3.30	0.0102	0.0102	864	16	201	4.3	5	1005	75.7	109	Oke
	L	45.8	57.3	0.0282	0.0212	0.0039	0.0106	18.82	3.43	258	340	T Seb	1.98	0.0061	0.0061	519	16	201	2.6	3	602.9	45.4	69	Oke
406	T	52.3	65.4	0.0282	0.0212	0.0039	0.0106	18.82	3.43	276	340	T Seb	2.26	0.0070	0.0070	593	16	201	3.0	3	602.9	45.4	69	Oke
	L	45.7	57.1	0.0282	0.0212	0.0039	0.0106	18.82	3.43	258	340	T Seb	1.98	0.0061	0.0061	518	16	201	2.6	3	602.9	45.4	69	Oke
407	T	76.0	95.0	0.0282	0.0212	0.0039	0.0106	18.82	3.43	333	340	T Seb	3.29	0.0101	0.0101	862	16	201	4.3	5	1005	75.7	109	Oke
	L	45.2	56.5	0.0282	0.0212	0.0039	0.0106	18.82	3.43	257	340	T Seb	1.96	0.0060	0.0060	513	16	201	2.6	3	602.9	45.4	69	Oke
424	T	54.0	67.5	0.0282	0.0212	0.0039	0.0106	18.82	3.43	281	340	T Seb	2.34	0.0072	0.0072	612	16	201	3.0	4	803.8	60.5	90	Oke
	L	45.4	56.8	0.0282	0.0212	0.0039	0.0106	18.82	3.43	257	340	T Seb	1.96	0.0061	0.0061	515	16	201	2.6	3	602.9	45.4	69	Oke
425	T	75.2	94.0	0.0282	0.0212	0.0039	0.0106	18.82	3.43	331	340	T Seb	3.25	0.0100	0.0100	853	16	201	4.2	5	1005	75.7	109	Oke
	L	45.0	56.3	0.0282	0.0212	0.0039	0.0106	18.82	3.43	256	340	T Seb	1.95	0.0060	0.0060	510	16	201	2.5	3	602.9	45.4	69	Oke
426	T	75.2	94.0	0.0282	0.0212	0.0039	0.0106	18.82	3.43	331	340	T Seb	3.25	0.0100	0.0100	853	16	201	4.2	5	1005	75.7	109	Oke
	L	44.9	56.1	0.0282	0.0212	0.0039	0.0106	18.82	3.43	256	340	T Seb	1.94	0.0060	0.0060	509	16	201	2.5	3	602.9	45.4	69	Oke
427	T	76.3	95.4	0.0282	0.0212	0.0039	0.0106	18.82	3.43	333	340	T Seb	3.30	0.0102	0.0102	865	16	201	4.3	5	1005	75.7	109	Oke
	L	45.5	56.9	0.0282	0.0212	0.0039	0.0106	18.82	3.43	258	340	T Seb	1.97	0.0061	0.0061	516	16	201	2.6	3	602.9	45.4	69	Oke
445	T	74.7	93.4	0.0282	0.0212	0.0039	0.0106	18.82	3.43	330	340	T Seb	3.23	0.0100	0.0100	847	16	201	4.2	5	1005	75.7	109	Oke
	L	46.0	57.5	0.0282	0.0212	0.0039	0.0106	18.82	3.43	259	340	T Seb	1.99	0.0061	0.0061	522	16	201	2.6	3	602.9	45.4	69	Oke
446	T	70.6	88.3	0.0282	0.0212	0.0039	0.0106	18.82	3.43	321	340	T Seb	3.05	0.0094	0.0094	801	16	201	4.0	4	803.8	60.5	90	Oke
	L	37.1	46.4	0.0282	0.0212	0.0039	0.0106	18.82	3.43	233	340	T Seb	1.60	0.0050	0.0050	421	16	201	2.1	3	602.9	45.4	69	Oke

PERHITUNGAN TULANGAN BALOK ANAK

Dimensi Balok Anak = 250 x 400 mm

fc' = 22.5 mpa

fy = 360 mpa

Lantai 3

Lampiran 5

FRM		Mu KNm	Mu/ϕ KNm	ρb	ρ maks	ρ min	ρ pakai	m mm	Rn perlu	d perlu mm	d pakai mm	Tul Pakai	Rn baru	ρ baru	ρ pakai	Asperlu mm2	Ø mm	A Ø mm2	n	Tul Pakai	As ada mm2	a mm	Mn KNm	Cek
447	T	67.9	84.9	0.0282	0.0212	0.0039	0.0106	18.82	3.43	315	340	T Seb	2.94	0.0091	0.0091	770	16	201	3.8	4	803.8	60.5	90	Oke
	L	37.4	46.8	0.0282	0.0212	0.0039	0.0106	18.82	3.43	233	340	T Seb	1.62	0.0050	0.0050	424	16	201	2.1	3	602.9	45.4	69	Oke
448	T	67.4	84.3	0.0282	0.0212	0.0039	0.0106	18.82	3.43	313	340	T Seb	2.92	0.0090	0.0090	764	16	201	3.8	4	803.8	60.5	90	Oke
	L	36.9	46.1	0.0282	0.0212	0.0039	0.0106	18.82	3.43	232	340	T Seb	1.60	0.0049	0.0049	419	16	201	2.1	3	602.9	45.4	69	Oke
449	T	75.4	94.3	0.0282	0.0212	0.0039	0.0106	18.82	3.43	332	340	T Seb	3.26	0.0101	0.0101	855	16	201	4.3	5	1005	75.7	109	Oke
	L	46.0	57.5	0.0282	0.0212	0.0039	0.0106	18.82	3.43	259	340	T Seb	1.99	0.0061	0.0061	522	16	201	2.6	3	602.9	45.4	69	Oke
467	T	74.6	93.3	0.0282	0.0212	0.0039	0.0106	18.82	3.43	330	340	T Seb	3.23	0.0100	0.0100	846	16	201	4.2	5	1005	75.7	109	Oke
	L	46.1	57.6	0.0282	0.0212	0.0039	0.0106	18.82	3.43	259	340	T Seb	1.99	0.0062	0.0062	523	16	201	2.6	3	602.9	45.4	69	Oke
468	T	69.6	87.0	0.0282	0.0212	0.0039	0.0106	18.82	3.43	318	340	T Seb	3.01	0.0093	0.0093	789	16	201	3.9	4	803.8	60.5	90	Oke
	L	37.0	46.3	0.0282	0.0212	0.0039	0.0106	18.82	3.43	232	340	T Seb	1.60	0.0049	0.0049	420	16	201	2.1	3	602.9	45.4	69	Oke
469	T	67.8	84.8	0.0282	0.0212	0.0039	0.0106	18.82	3.43	314	340	T Seb	2.93	0.0090	0.0090	769	16	201	3.8	4	803.8	60.5	90	Oke
	L	37.6	47.0	0.0282	0.0212	0.0039	0.0106	18.82	3.43	234	340	T Seb	1.63	0.0050	0.0050	426	16	201	2.1	3	602.9	45.4	69	Oke
470	T	68.1	85.1	0.0282	0.0212	0.0039	0.0106	18.82	3.43	315	340	T Seb	2.95	0.0091	0.0091	772	16	201	3.8	4	803.8	60.5	90	Oke
	L	36.8	46.0	0.0282	0.0212	0.0039	0.0106	18.82	3.43	232	340	T Seb	1.59	0.0049	0.0049	417	16	201	2.1	3	602.9	45.4	69	Oke
471	T	75.2	94.0	0.0282	0.0212	0.0039	0.0106	18.82	3.43	331	340	T Seb	3.25	0.0100	0.0100	853	16	201	4.2	5	1005	75.7	109	Oke
	L	46.1	57.6	0.0282	0.0212	0.0039	0.0106	18.82	3.43	259	340	T Seb	1.99	0.0062	0.0062	523	16	201	2.6	3	602.9	45.4	69	Oke
558	T	74.8	93.5	0.0282	0.0212	0.0039	0.0106	18.82	3.43	330	340	T Seb	3.24	0.0100	0.0100	848	16	201	4.2	5	1005	75.7	109	Oke
	L	45.5	56.9	0.0282	0.0212	0.0039	0.0106	18.82	3.43	258	340	T Seb	1.97	0.0061	0.0061	516	16	201	2.6	3	602.9	45.4	69	Oke
559	T	75.4	94.3	0.0282	0.0212	0.0039	0.0106	18.82	3.43	332	340	T Seb	3.26	0.0101	0.0101	855	16	201	4.3	5	1005	75.7	109	Oke
	L	45.7	57.1	0.0282	0.0212	0.0039	0.0106	18.82	3.43	258	340	T Seb	1.98	0.0061	0.0061	518	16	201	2.6	3	602.9	45.4	69	Oke
560	T	52.5	65.6	0.0282	0.0212	0.0039	0.0106	18.82	3.43	277	340	T Seb	2.27	0.0070	0.0070	595	16	201	3.0	3	602.9	45.4	69	Oke
	L	45.6	57.0	0.0282	0.0212	0.0039	0.0106	18.82	3.43	258	340	T Seb	1.97	0.0061	0.0061	517	16	201	2.6	3	602.9	45.4	69	Oke
561	T	75.6	94.5	0.0282	0.0212	0.0039	0.0106	18.82	3.43	332	340	T Seb	3.27	0.0101	0.0101	857	16	201	4.3	5	1005	75.7	109	Oke
	L	45.5	56.9	0.0282	0.0212	0.0039	0.0106	18.82	3.43	258	340	T Seb	1.97	0.0061	0.0061	516	16	201	2.6	3	602.9	45.4	69	Oke
598	T	75.7	94.6	0.0282	0.0212	0.0039	0.0106	18.82	3.43	332	340	T Seb	3.27	0.0101	0.0101	859	16	201	4.3	5	1005	75.7	109	Oke
	L	45.8	57.3	0.0282	0.0212	0.0039	0.0106	18.82	3.43	258	340	T Seb	1.98	0.0061	0.0061	519	16	201	2.6	3	602.9	45.4	69	Oke
599	T	75.6	94.5	0.0282	0.0212	0.0039	0.0106	18.82	3.43	332	340	T Seb	3.27	0.0101	0.0101	857	16	201	4.3	5	1005	75.7	109	Oke
	L	45.6	57.0	0.0282	0.0212	0.0039	0.0106	18.82	3.43	258	340	T Seb	1.97	0.0061	0.0061	517	16	201	2.6	3	602.9	45.4	69	Oke
600	T	75.6	94.5	0.0282	0.0212	0.0039	0.0106	18.82	3.43	332	340	T Seb	3.27	0.0101	0.0101	857	16	201	4.3	5	1005	75.7	109	Oke
	L	45.5	56.9	0.0282	0.0212	0.0039	0.0106	18.82	3.43	258	340	T Seb	1.97	0.0061	0.0061	516	16	201	2.6	3	602.9	45.4	69	Oke
601	T	76.0	95.0	0.0282	0.0212	0.0039	0.0106	18.82	3.43	333	340	T Seb	3.29	0.0101	0.0101	862	16	201	4.3	5	1005	75.7	109	Oke
	L	45.8	57.3	0.0282	0.0212	0.0039	0.0106	18.82	3.43	258	340	T Seb	1.98	0.0061	0.0061	519	16	201	2.6	3	602.9	45.4	69	Oke
619	T	74.3	92.9	0.0282	0.0212	0.0039	0.0106	18.82	3.43	329	340	T Seb	3.21	0.0099	0.0099	843	16	201	4.2	5	1005	75.7	109	Oke
	L	46.5	58.1	0.0282	0.0212	0.0039	0.0106	18.82	3.43	260	340	T Seb	2.01	0.0062	0.0062	527	16	201	2.6	3	602.9	45.4	69	Oke

PERHITUNGAN TULANGAN BALOK ANAK

Dimensi Balok Anak = 250 x 400 mm

fc' = 22.5 mpa

fy = 360 mpa

Lantai 4

Lampiran 6

FRM		Mu KNm	Mu/ϕ KNm	ρb	ρ maks	ρ min	ρ pakai	m mm	Rn perlu	d perlu mm	d pakai mm	Tul Pakai	Rn baru	ρ baru	ρ pakai	Asperlu mm2	Ø mm	A Ø mm2	n	Tul Pakai	As ada mm2	a mm	Mn KNm	Cek
620	T	70.7	88.4	0.0282	0.0212	0.0039	0.0106	18.82	3.43	321	340	T Seb	3.06	0.0094	0.0094	802	16	201	4.0	4	803.8	60.5	90	Oke
	L	37.0	46.3	0.0282	0.0212	0.0039	0.0106	18.82	3.43	232	340	T Seb	1.60	0.0049	0.0049	420	16	201	2.1	3	602.9	45.4	69	Oke
621	T	68.5	85.6	0.0282	0.0212	0.0039	0.0106	18.82	3.43	316	340	T Seb	2.96	0.0091	0.0091	777	16	201	3.9	4	803.8	60.5	90	Oke
	L	37.3	46.6	0.0282	0.0212	0.0039	0.0106	18.82	3.43	233	340	T Seb	1.61	0.0050	0.0050	423	16	201	2.1	3	602.9	45.4	69	Oke
622	T	66.9	83.6	0.0282	0.0212	0.0039	0.0106	18.82	3.43	312	340	T Seb	2.89	0.0089	0.0089	759	16	201	3.8	4	803.8	60.5	90	Oke
	L	36.8	46.0	0.0282	0.0212	0.0039	0.0106	18.82	3.43	232	340	T Seb	1.59	0.0049	0.0049	417	16	201	2.1	3	602.9	45.4	69	Oke
623	T	74.9	93.6	0.0282	0.0212	0.0039	0.0106	18.82	3.43	330	340	T Seb	3.24	0.0100	0.0100	850	16	201	4.2	5	1005	75.7	109	Oke
	L	46.5	58.1	0.0282	0.0212	0.0039	0.0106	18.82	3.43	260	340	T Seb	2.01	0.0062	0.0062	527	16	201	2.6	3	602.9	45.4	69	Oke
641	T	74.1	92.6	0.0282	0.0212	0.0039	0.0106	18.82	3.43	329	340	T Seb	3.21	0.0099	0.0099	840	16	201	4.2	5	1005	75.7	109	Oke
	L	46.6	58.3	0.0282	0.0212	0.0039	0.0106	18.82	3.43	261	340	T Seb	2.02	0.0062	0.0062	529	16	201	2.6	3	602.9	45.4	69	Oke
642	T	69.8	87.3	0.0282	0.0212	0.0039	0.0106	18.82	3.43	319	340	T Seb	3.02	0.0093	0.0093	792	16	201	3.9	4	803.8	60.5	90	Oke
	L	36.8	46.0	0.0282	0.0212	0.0039	0.0106	18.82	3.43	232	340	T Seb	1.59	0.0049	0.0049	417	16	201	2.1	3	602.9	45.4	69	Oke
643	T	68.2	85.3	0.0282	0.0212	0.0039	0.0106	18.82	3.43	315	340	T Seb	2.95	0.0091	0.0091	774	16	201	3.8	4	803.8	60.5	90	Oke
	L	37.6	47.0	0.0282	0.0212	0.0039	0.0106	18.82	3.43	234	340	T Seb	1.63	0.0050	0.0050	426	16	201	2.1	3	602.9	45.4	69	Oke
644	T	68.2	85.3	0.0282	0.0212	0.0039	0.0106	18.82	3.43	315	340	T Seb	2.95	0.0091	0.0091	774	16	201	3.8	4	803.8	60.5	90	Oke
	L	36.6	45.8	0.0282	0.0212	0.0039	0.0106	18.82	3.43	231	340	T Seb	1.58	0.0049	0.0049	415	16	201	2.1	3	602.9	45.4	69	Oke
645	T	74.7	93.4	0.0282	0.0212	0.0039	0.0106	18.82	3.43	330	340	T Seb	3.23	0.0100	0.0100	847	16	201	4.2	5	1005	75.7	109	Oke
	L	46.6	58.3	0.0282	0.0212	0.0039	0.0106	18.82	3.43	261	340	T Seb	2.02	0.0062	0.0062	529	16	201	2.6	3	602.9	45.4	69	Oke

PERHITUNGAN TULANGAN BALOK SLOOF

fc' = 22.5 mpa Dimensi Sloof = 300 x400 mm

fy = 360 mpa

SLOOF ARAH X

FRM		Mu KNm	Mu/ϕ KNm	ρb	ρ maks	ρ min	ρ pakai	m mm	Rn perlu	d perlu mm	d pakai mm	Tul Pakai	Rn baru	ρ baru	ρ pakai	Asperlu mm2	Ø mm	A Ø mm2	n	Tul Pakai	As ada mm2	a mm	Mn KNm	Cek
F 58	T	74.3	92.8	0.0282	0.0212	0.00389	0.01058	18.8	3.43	300	350	T Seb	2.526	0.0078	0.0078	818	19	283.39	2.9	3	850	53.34	99	Oke
	L	24.4	30.5	0.0282	0.0212	0.00389	0.01058	18.8	3.43	172	350	T Seb	0.83	0.0026	0.0039	476	19	283.39	1.7	2	567	35.56	68	Oke
F 69	T	36.5	45.6	0.0282	0.0212	0.00389	0.01058	18.8	3.43	211	350	T Seb	1.241	0.0038	0.0039	476	19	283.39	1.7	2	567	35.56	68	Oke
	L	10.8	13.5	0.0282	0.0212	0.00389	0.01058	18.8	3.43	115	350	T Seb	0.367	0.0011	0.0039	476	19	283.39	1.7	2	567	35.56	68	Oke
F 80	T	42.6	53.3	0.0282	0.0212	0.00389	0.01058	18.8	3.43	227	350	T Seb	1.449	0.0045	0.0045	548	19	283.39	1.9	2	567	35.56	68	Oke
	L	11.4	14.3	0.0282	0.0212	0.00389	0.01058	18.8	3.43	118	350	T Seb	0.388	0.0012	0.0039	476	19	283.39	1.7	2	567	35.56	68	Oke
F 91	T	53.6	67.0	0.0282	0.0212	0.00389	0.01058	18.8	3.43	255	350	T Seb	1.823	0.0056	0.0056	689	19	283.39	2.4	3	850	53.34	99	Oke
	L	11.0	13.8	0.0282	0.0212	0.00389	0.01058	18.8	3.43	116	350	T Seb	0.374	0.0012	0.0039	476	19	283.39	1.7	2	567	35.56	68	Oke
F 102	T	52.7	65.9	0.0282	0.0212	0.00389	0.01058	18.8	3.43	253	350	T Seb	1.793	0.0055	0.0055	677	19	283.39	2.4	3	850	53.34	99	Oke
	L	10.5	13.1	0.0282	0.0212	0.00389	0.01058	18.8	3.43	113	350	T Seb	0.356	0.0011	0.0039	476	19	283.39	1.7	2	567	35.56	68	Oke
F 119	T	52.2	65.3	0.0282	0.0212	0.00389	0.01058	18.8	3.43	252	350	T Seb	1.776	0.0055	0.0055	671	19	283.39	2.4	3	850	53.34	99	Oke
	L	10.7	13.4	0.0282	0.0212	0.00389	0.01058	18.8	3.43	114	350	T Seb	0.364	0.0011	0.0039	476	19	283.39	1.7	2	567	35.56	68	Oke
F 120	T	77.6	97.0	0.0282	0.0212	0.00389	0.01058	18.8	3.43	307	350	T Seb	2.639	0.0081	0.0081	998	19	283.39	3.5	4	1134	71.12	128	Oke
	L	24.5	30.6	0.0282	0.0212	0.00389	0.01058	18.8	3.43	173	350	T Seb	0.833	0.0026	0.0039	476	19	283.39	1.7	2	567	35.56	68	Oke

SLOOF ARAH Y

FRM		Mu KNm	Mu/ϕ KNm	ρb	ρ maks	ρ min	ρ pakai	m mm	Rn perlu	d perlu mm	d pakai mm	Tul Pakai	Rn baru	ρ baru	ρ pakai	Asperlu mm2	Ø mm	A Ø mm2	n	Tul Pakai	As ada mm2	a mm	Mn KNm	Cek
F 68	T	88.6	110.8	0.0282	0.0212	0.00389	0.01058	18.8	3.43	328	350	T Seb	3.014	0.0093	0.0093	976	19	283.39	3.4	4	1134	71.12	128	Oke
	L	31.8	39.8	0.0282	0.0212	0.00389	0.01058	18.8	3.43	197	350	T Seb	1.082	0.0033	0.0039	476	19	283.39	1.7	2	567	35.56	68	Oke
F 111	T	47.2	59.0	0.0282	0.0212	0.00389	0.01058	18.8	3.43	239	350	T Seb	1.605	0.0050	0.0050	607	19	283.39	2.1	3	850	53.34	99	Oke
	L	11.0	13.8	0.0282	0.0212	0.00389	0.01058	18.8	3.43	116	350	T Seb	0.374	0.0012	0.0039	476	19	283.39	1.7	2	567	35.56	68	Oke
F 110	T	45.1	56.4	0.0282	0.0212	0.00389	0.01058	18.8	3.43	234	350	T Seb	1.534	0.0047	0.0047	580	19	283.39	2.0	3	850	53.34	99	Oke
	L	11.4	14.3	0.0282	0.0212	0.00389	0.01058	18.8	3.43	118	350	T Seb	0.388	0.0012	0.0039	476	19	283.39	1.7	2	567	35.56	68	Oke
F 109	T	45.5	56.9	0.0282	0.0212	0.00389	0.01058	18.8	3.43	235	350	T Seb	1.548	0.0048	0.0048	585	19	283.39	2.1	3	850	53.34	99	Oke
	L	11.0	13.8	0.0282	0.0212	0.00389	0.01058	18.8	3.43	116	350	T Seb	0.374	0.0012	0.0039	476	19	283.39	1.7	2	567	35.56	68	Oke
F 108	T	47.6	59.4	0.0282	0.0212	0.00389	0.01058	18.8	3.43	240	350	T Seb	1.617	0.0050	0.0050	611	19	283.39	2.2	3	850	53.34	99	Oke
	L	9.6	12.0	0.0282	0.0212	0.00389	0.01058	18.8	3.43	108	350	T Seb	0.327	0.0010	0.0039	476	19	283.39	1.7	2	567	35.56	68	Oke

Lampiran 8

PERHITUNGAN TULANGAN RING BALOK

fc' = 22.5 mpa Dimensi Sloof = 250 x 350 mm

fy = 360 mpa

RING BALOK ARAH X

FRM		Mu KNm	Mu/ϕ KNm	ρb	ρ maks	ρ min	ρ pakai	m mm	Rn perlu	d perlu mm	d pakai mm	Tul Pakai	Rn baru	ρ baru	ρ pakai	Asperlu mm2	Ø mm	A Ø mm2	n	Tul Pakai	As ada mm2	a mm	Mn KNm	Cek
F 707	T	40.5	50.6	0.0282	0.0212	0.00389	0.01058	18.8	3.43	243	300	T Seb	2.249	0.0069	0.0069	520	16	200.96	2.6	3	603	45.39	60	Oke
	L	13.2	16.5	0.0282	0.0212	0.00389	0.01058	18.8	3.43	139	300	T Seb	0.733	0.0023	0.0039	292	16	200.96	1.5	2	402	30.26	41	Oke
F 713	T	39.5	49.4	0.0282	0.0212	0.00389	0.01058	18.8	3.43	240	300	T Seb	2.194	0.0068	0.0068	508	16	200.96	2.5	3	603	45.39	60	Oke
	L	12.8	16.0	0.0282	0.0212	0.00389	0.01058	18.8	3.43	137	300	T Seb	0.711	0.0022	0.0039	292	16	200.96	1.5	2	402	30.26	41	Oke
F719	T	40.0	50.0	0.0282	0.0212	0.00389	0.01058	18.8	3.43	241	300	T Seb	2.222	0.0069	0.0069	514	16	200.96	2.6	3	603	45.39	60	Oke
	L	13.1	16.4	0.0282	0.0212	0.00389	0.01058	18.8	3.43	138	300	T Seb	0.728	0.0022	0.0039	292	16	200.96	1.5	2	402	30.26	41	Oke
F725	T	40.1	50.1	0.0282	0.0212	0.00389	0.01058	18.8	3.43	242	300	T Seb	2.228	0.0069	0.0069	515	16	200.96	2.6	3	603	45.39	60	Oke
	L	12.9	16.1	0.0282	0.0212	0.00389	0.01058	18.8	3.43	137	300	T Seb	0.717	0.0022	0.0039	292	16	200.96	1.5	2	402	30.26	41	Oke
F731	T	39.5	49.4	0.0282	0.0212	0.00389	0.01058	18.8	3.43	240	300	T Seb	2.194	0.0068	0.0068	508	16	200.96	2.5	3	603	45.39	60	Oke
	L	12.8	16.0	0.0282	0.0212	0.00389	0.01058	18.8	3.43	137	300	T Seb	0.711	0.0022	0.0039	292	16	200.96	1.5	2	402	30.26	41	Oke
F737	T	39.6	49.5	0.0282	0.0212	0.00389	0.01058	18.8	3.43	240	300	T Seb	2.2	0.0068	0.0068	509	16	200.96	2.5	3	603	45.39	60	Oke
	L	13.1	16.4	0.0282	0.0212	0.00389	0.01058	18.8	3.43	138	300	T Seb	0.728	0.0022	0.0039	292	16	200.96	1.5	2	402	30.26	41	Oke
F743	T	40.3	50.3	0.0282	0.0212	0.00389	0.01058	18.8	3.43	242	300	T Seb	2.237	0.0069	0.0069	518	16	200.96	2.6	3	603	45.39	60	Oke
	L	13.5	16.9	0.0282	0.0212	0.00389	0.01058	18.8	3.43	140	300	T Seb	0.75	0.0023	0.0039	292	16	200.96	1.5	2	402	30.26	41	Oke

RING BALOK ARAH Y Dimensi Sloof = 250 x350 mm

FRM		Mu KNm	Mu/ϕ KNm	ρb	ρ maks	ρ min	ρ pakai	m mm	Rn perlu	d perlu mm	d pakai mm	Tul Pakai	Rn baru	ρ baru	ρ pakai	Asperlu mm2	Ø mm	A Ø mm2	n	Tul Pakai	As ada mm2	a mm	Mn KNm	Cek
F710	T	10.6	13.3	0.0282	0.0212	0.00389	0.01058	18.8	3.43	124	300	T Seb	0.589	0.0018	0.0039	292	16	200.96	1.5	2	402	30.26	41	Oke
	L	2.2	2.8	0.0282	0.0212	0.00389	0.01058	18.8	3.43	57	300	T Seb	0.122	0.0004	0.0039	292	16	200.96	1.5	2	402	30.26	41	Oke
F715	T	7.7	9.6	0.0282	0.0212	0.00389	0.01058	18.8	3.43	106	300	T Seb	0.428	0.0013	0.0039	292	16	200.96	1.5	2	402	30.26	41	Oke
	L	3.0	3.8	0.0282	0.0212	0.00389	0.01058	18.8	3.43	66	300	T Seb	0.167	0.0005	0.0039	292	16	200.96	1.5	2	402	30.26	41	Oke
F721	T	7.2	9.0	0.0282	0.0212	0.00389	0.01058	18.8	3.43	102	300	T Seb	0.4	0.0012	0.0039	292	16	200.96	1.5	2	402	30.26	41	Oke
	L	3.5	4.4	0.0282	0.0212	0.00389	0.01058	18.8	3.43	71	300	T Seb	0.194	0.0006	0.0039	292	16	200.96	1.5	2	402	30.26	41	Oke
F733	T	6.6	8.3	0.0282	0.0212	0.00389	0.01058	18.8	3.43	98	300	T Seb	0.367	0.0011	0.0039	292	16	200.96	1.5	2	402	30.26	41	Oke
	L	2.8	3.5	0.0282	0.0212	0.00389	0.01058	18.8	3.43	64	300	T Seb	0.156	0.0005	0.0039	292	16	200.96	1.5	2	402	30.26	41	Oke
F742	T	10.2	12.8	0.0282	0.0212	0.00389	0.01058	18.8	3.43	122	300	T Seb	0.567	0.0017	0.0039	292	16	200.96	1.5	2	402	30.26	41	Oke
	L	2.2	2.8	0.0282	0.0212	0.00389	0.01058	18.8	3.43	57	300	T Seb	0.122	0.0004	0.0039	292	16	200.96	1.5	2	402	30.26	41	Oke

PERHITUNGAN TULANGAN BALOK INDUK

Dimensi Balok Induk = 300 x 400 mm
fc' = 22.5 mpa
fy = 360 mpa

Lampiran 9

PORTAL ARAH X : Y= 0 M (PORTAL A)

FRM		Mu KNm	Mu/ϕ KNm	ρb	ρ maks	ρ min	ρ pakai	m mm	Rn perlu	d perlu mm	d pakai mm	Tul Pakai	Rn baru	ρ baru	ρ pakai	Asperlu mm2	Ø mm	A Ø mm2	n	Tul Pakai	As ada mm2	a mm	Mn KNm	Cek
As 7-8	T	96.7	120.9	0.0282	0.0212	0.00389	0.0106	18.82	3.43	343	342.78	T Rang	3.431	0.01058	0.0106	1088	19	283	3.8	4	1134	71.12	125	Oke
Lt 1	L	41.2	51.5	0.0282	0.0212	0.00389	0.0106	18.82	3.43	224	340	T Seb	1.485	0.00458	0.0046	467	19	283	1.6	2	566.8	35.56	66	Oke
As 8-9	T	92.1	115.1	0.0282	0.0212	0.00389	0.0106	18.82	3.43	334	340	T Seb	3.318	0.01024	0.0102	1044	19	283	3.7	4	1134	71.12	124	Oke
Lt 1	L	33.4	41.8	0.0282	0.0212	0.00389	0.0106	18.82	3.43	202	340	T Seb	1.205	0.00372	0.0039	397	19	283	1.4	2	566.8	35.56	66	Oke
As 9-10	T	90.2	112.7	0.0282	0.0212	0.00389	0.0106	18.82	3.43	331	340	T Seb	3.249	0.01002	0.01	1023	19	283	3.6	4	1134	71.12	124	Oke
Lt 1	L	34.4	43.0	0.0282	0.0212	0.00389	0.0106	18.82	3.43	204	340	T Seb	1.24	0.00383	0.0039	397	19	283	1.4	2	566.8	35.56	66	Oke
As 10-11	T	89.0	111.2	0.0282	0.0212	0.00389	0.0106	18.82	3.43	329	340	T Seb	3.207	0.00989	0.0099	1009	19	283	3.6	4	1134	71.12	124	Oke
Lt 1	L	33.4	41.7	0.0282	0.0212	0.00389	0.0106	18.82	3.43	201	340	T Seb	1.202	0.00371	0.0039	397	19	283	1.4	2	566.8	35.56	66	Oke
As 11-12	T	86.7	108.4	0.0282	0.0212	0.00389	0.0106	18.82	3.43	324	340	T Seb	3.124	0.00964	0.0096	983	19	283	3.5	4	1134	71.12	124	Oke
Lt 1	L	41.2	51.5	0.0282	0.0212	0.00389	0.0106	18.82	3.43	224	340	T Seb	1.484	0.00458	0.0046	467	19	283	1.6	2	566.8	35.56	66	Oke
As 7-8	T	87.6	109.5	0.0282	0.0212	0.00389	0.0106	18.82	3.43	326	340	T Seb	3.158	0.00974	0.0097	994	19	283	3.5	4	1134	71.12	124	Oke
Lt 2	L	39.7	49.6	0.0282	0.0212	0.00389	0.0106	18.82	3.43	220	340	T Seb	1.431	0.00441	0.0044	450	19	283	1.6	2	566.8	35.56	66	Oke
As 8-9	T	85.6	107.0	0.0282	0.0212	0.00389	0.0106	18.82	3.43	322	340	T Seb	3.084	0.00952	0.0095	971	19	283	3.4	4	1134	71.12	124	Oke
Lt 2	L	35.9	44.9	0.0282	0.0212	0.00389	0.0106	18.82	3.43	209	340	T Seb	1.295	0.00399	0.004	407	19	283	1.4	2	566.8	35.56	66	Oke
As 9-10	T	89.2	111.5	0.0282	0.0212	0.00389	0.0106	18.82	3.43	329	340	T Seb	3.215	0.00992	0.0099	1012	19	283	3.6	4	1134	71.12	124	Oke
Lt 2	L	30.7	38.3	0.0282	0.0212	0.00389	0.0106	18.82	3.43	193	340	T Seb	1.105	0.00341	0.0039	397	19	283	1.4	2	566.8	35.56	66	Oke
As 10-11	T	82.9	103.6	0.0282	0.0212	0.00389	0.0106	18.82	3.43	317	340	T Seb	2.986	0.00921	0.0092	940	19	283	3.3	4	1134	71.12	124	Oke
Lt 2	L	35.8	44.8	0.0282	0.0212	0.00389	0.0106	18.82	3.43	209	340	T Seb	1.292	0.00399	0.004	407	19	283	1.4	2	566.8	35.56	66	Oke
As 11-12	T	81.0	101.2	0.0282	0.0212	0.00389	0.0106	18.82	3.43	314	340	T Seb	2.919	0.009	0.009	918	19	283	3.2	4	1134	71.12	124	Oke
Lt 2	L	39.7	49.6	0.0282	0.0212	0.00389	0.0106	18.82	3.43	219	340	T Seb	1.429	0.00441	0.0044	450	19	283	1.6	2	566.8	35.56	66	Oke
As 7-8	T	66.3	82.9	0.0282	0.0212	0.00389	0.0106	18.82	3.43	284	340	T Seb	2.39	0.00737	0.0074	752	19	283	2.7	3	850.2	53.34	96	Oke
Lt 3	L	41.0	51.2	0.0282	0.0212	0.00389	0.0106	18.82	3.43	223	340	T Seb	1.476	0.00455	0.0046	464	19	283	1.6	2	566.8	35.56	66	Oke
As 8-9	T	65.6	82.0	0.0282	0.0212	0.00389	0.0106	18.82	3.43	282	340	T Seb	2.363	0.00729	0.0073	744	19	283	2.6	3	850.2	53.34	96	Oke
Lt 3	L	36.2	45.3	0.0282	0.0212	0.00389	0.0106	18.82	3.43	210	340	T Seb	1.306	0.00403	0.004	411	19	283	1.4	2	566.8	35.56	66	Oke
As 9-10	T	71.1	88.8	0.0282	0.0212	0.00389	0.0106	18.82	3.43	294	340	T Seb	2.561	0.0079	0.0079	806	19	283	2.8	3	850.2	53.34	96	Oke
Lt 3	L	28.2	35.3	0.0282	0.0212	0.00389	0.0106	18.82	3.43	185	340	T Seb	1.018	0.00314	0.0039	397	19	283	1.4	2	566.8	35.56	66	Oke
As 10-11	T	69.9	87.4	0.0282	0.0212	0.00389	0.0106	18.82	3.43	291	340	T Seb	2.521	0.00778	0.0078	793	19	283	2.8	3	850.2	53.34	96	Oke
Lt 3	L	36.6	45.8	0.0282	0.0212	0.00389	0.0106	18.82	3.43	211	340	T Seb	1.321	0.00407	0.0041	416	19	283	1.5	2	566.8	35.56	66	Oke
As 11-12	T	68.0	85.0	0.0282	0.0212	0.00389	0.0106	18.82	3.43	287	340	T Seb	2.451	0.00756	0.0076	771	19	283	2.7	3	850.2	53.34	96	Oke
Lt 3	L	40.9	51.1	0.0282	0.0212	0.00389	0.0106	18.82	3.43	223	340	T Seb	1.473	0.00455	0.0045	464	19	283	1.6	2	566.8	35.56	66	Oke
	T	74.6	93.3	0.0282	0.0212	0.00389	0.0106	18.82	3.43	301	340	T Seb	2.689	0.0083	0.0083	846	19	283	3.0	3	850.2	53.34	96	Oke
Sloof	L	24.2	30.3	0.0282	0.0212	0.00389	0.0106	18.82	3.43	172	340	T Seb	0.873	0.00269	0.0039	397	19	283	1.4	2	566.8	35.56	66	Oke
	T	48.6	60.7	0.0282	0.0212	0.00389	0.0106	18.82	3.43	243	340	T Seb	1.751	0.0054	0.0054	551	16	201	2.7	3	602.9	37.83	70	Oke
Ringbalk	L	14.9	18.7	0.0282	0.0212	0.00389	0.0106	18.82	3.43	135	340	T Seb	0.538	0.00166	0.0039	397	16	201	2.0	2	401.9	25.22	47	Oke

PERHITUNGAN TULANGAN BALOK INDUK

Dimensi Balok Induk = 300 x 400 mm
fc' = 22.5 mpa
fy = 360 mpa

Lampiran 10

PORTAL ARAH X : Y= 6 M (PORTAL B)

FRM		Mu KNm	Mu/ϕ KNm	ρb	ρ maks	ρ min	ρ pakai	m mm	Rn perlu	d perlu mm	d pakai mm	Tul Pakai	Rn baru	ρ baru	ρ pakai	As perlu mm2	2 mm	A Ø mm2	n	Tul Pakai	As ada mm2	a mm	Mn KNm	Cek
As 7-8	T	73.0	91.3	0.0282	0.0212	0.00389	0.0106	18.82	3.43	298	340	T Seb	2.602	0.00812	0.0081	828	19	233	2.9	3	350	53.31	96	Oke
Lt 1	L	49.3	61.6	0.0282	0.0212	0.00389	0.0106	18.82	3.43	245	340	T Seb	1.777	0.00548	0.0055	559	19	233	2.0	2	567	35.56	66	Oke
As 8-9	T	94.9	118.6	0.0282	0.0212	0.00389	0.0106	18.82	3.43	340	340	T Seb	3.421	0.01055	0.0105	1076	19	233	3.8	4	1134	71.12	124	Oke
Lt 1	L	37.3	46.6	0.0282	0.0212	0.00389	0.0106	18.82	3.43	213	340	T Seb	1.345	0.00415	0.0041	423	19	233	1.5	2	567	35.56	66	Oke
As 9-10	T	90.2	112.7	0.0282	0.0212	0.00389	0.0106	18.82	3.43	331	340	T Seb	3.25	0.01003	0.01	1020	19	233	3.5	4	1134	71.12	124	Oke
Lt 1	L	40.4	50.5	0.0282	0.0212	0.00389	0.0106	18.82	3.43	231	340	T Seb	1.455	0.00449	0.0045	458	19	233	1.5	2	567	35.56	66	Oke
As 10-11	T	87.7	109.6	0.0282	0.0212	0.00389	0.0106	18.82	3.43	326	340	T Seb	3.159	0.00975	0.0097	994	19	233	3.5	4	1134	71.12	124	Oke
Lt 1	L	37.1	46.4	0.0282	0.0212	0.00389	0.0106	18.82	3.43	212	340	T Seb	1.338	0.00413	0.0041	421	19	233	1.5	2	567	35.56	66	Oke
As 11-12	T	86.7	108.4	0.0282	0.0212	0.00389	0.0106	18.82	3.43	324	340	T Seb	3.125	0.00964	0.0096	983	19	233	3.5	4	1134	71.12	124	Oke
Lt 1	L	49.3	61.6	0.0282	0.0212	0.00389	0.0106	18.82	3.43	245	340	T Seb	1.777	0.00548	0.0055	559	19	233	2.0	2	567	35.56	66	Oke
As 7-8	T	78.3	97.9	0.0282	0.0212	0.00389	0.0106	18.82	3.43	308	340	T Seb	2.823	0.00871	0.0087	888	19	233	3.1	4	1134	71.12	124	Oke
Lt 2	L	45.7	57.1	0.0282	0.0212	0.00389	0.0106	18.82	3.43	236	340	T Seb	1.647	0.00508	0.0051	518	19	233	1.8	2	567	35.56	66	Oke
As 8-9	T	79.0	98.7	0.0282	0.0212	0.00389	0.0106	18.82	3.43	310	340	T Seb	2.847	0.00878	0.0088	895	19	233	3.2	4	1134	71.12	124	Oke
Lt 2	L	48.1	60.1	0.0282	0.0212	0.00389	0.0106	18.82	3.43	242	340	T Seb	1.732	0.00534	0.0053	545	19	233	1.9	2	567	35.56	66	Oke
As 10-11	T	79.6	99.5	0.0282	0.0212	0.00389	0.0106	18.82	3.43	311	340	T Seb	2.869	0.00885	0.0089	903	19	233	3.2	4	1134	71.12	124	Oke
Lt 2	L	48.0	60.0	0.0282	0.0212	0.00389	0.0106	18.82	3.43	241	340	T Seb	1.73	0.00534	0.0053	544	19	233	1.9	2	567	35.56	66	Oke
As 11-12	T	88.1	110.1	0.0282	0.0212	0.00389	0.0106	18.82	3.43	327	340	T Seb	3.175	0.00979	0.0098	999	19	233	3.5	4	1134	71.12	124	Oke
Lt 2	L	45.7	57.1	0.0282	0.0212	0.00389	0.0106	18.82	3.43	236	340	T Seb	1.645	0.00508	0.0051	518	19	233	1.8	2	567	35.56	66	Oke
As 7-8	T	63.8	79.7	0.0282	0.0212	0.00389	0.0106	18.82	3.43	278	340	T Seb	2.298	0.00709	0.0071	723	19	233	2.5	3	350	53.31	96	Oke
Lt 3	L	47.5	59.4	0.0282	0.0212	0.00389	0.0106	18.82	3.43	240	340	T Seb	1.713	0.00529	0.0053	539	19	233	1.9	2	567	35.56	66	Oke
As 8-9	T	86.8	108.5	0.0282	0.0212	0.00389	0.0106	18.82	3.43	325	340	T Seb	3.127	0.00965	0.0096	984	19	233	3.5	4	1134	71.12	124	Oke
Lt 3	L	53.7	67.1	0.0282	0.0212	0.00389	0.0106	18.82	3.43	265	340	T Seb	1.935	0.00597	0.006	609	19	233	2.1	3	350	53.31	96	Oke
As 10-11	T	87.6	109.5	0.0282	0.0212	0.00389	0.0106	18.82	3.43	326	340	T Seb	3.157	0.00974	0.0097	993	19	233	3.5	4	1134	71.12	124	Oke
Lt 3	L	53.9	66.9	0.0282	0.0212	0.00389	0.0106	18.82	3.43	265	340	T Seb	1.928	0.00595	0.0059	607	19	233	2.1	3	350	53.31	96	Oke
As 11-12	T	63.8	79.8	0.0282	0.0212	0.00389	0.0106	18.82	3.43	278	340	T Seb	2.31	0.00711	0.0071	724	19	233	2.5	3	350	53.31	96	Oke
Lt 3	L	47.5	59.3	0.0282	0.0212	0.00389	0.0106	18.82	3.43	240	340	T Seb	1.71	0.00528	0.0053	538	19	233	1.9	2	567	35.56	66	Oke
	T	62.3	77.9	0.0282	0.0212	0.00389	0.0106	18.82	3.43	275	340	T Seb	2.247	0.00693	0.0069	707	19	233	2.5	3	350	53.31	96	Oke
Sloof	L	10.8	13.5	0.0282	0.0212	0.00389	0.0106	18.82	3.43	115	340	T Seb	0.39	0.00112	0.0039	397	19	233	1.4	2	567	35.56	66	Oke
	T	47.6	59.5	0.0282	0.0212	0.00389	0.0106	18.82	3.43	240	340	T Seb	1.715	0.00529	0.0053	540	16	201	2.7	3	503	37.83	70	Oke
Ringbalk	L	14.6	18.3	0.0282	0.0212	0.00389	0.0106	18.82	3.43	133	340	T Seb	0.527	0.00163	0.0039	397	16	201	2.0	2	402	25.22	47	Oke

PERHITUNGAN TULANGAN BALOK INDUK

Dimensi Balok Induk = 300 x 400 mm
fc' = 22.5 mpa
fy = 360 mpa

Lampiran 11

PORTAL ARAH X ; Y= 12 M (PORTAL C)

FRM		Mu KNm	Mu/ϕ KNm	ρb	ρ maks	ρ min	ρ pakai	m mm	Rn perlu	d perlu mm	d pakai mm	Tul Pakai	Rn baru	ρ baru	ρ pakai	Asperlu mm2	Ø mm	A Ø mm2	n	Tul Pakai	As ada mm2	a mm	Mn KNm	Cek
As 7-8	T	73.3	91.6	0.0282	0.0212	0.00389	0.0106	18.82	3.43	298	340	T Seb	2.64	0.00815	0.0081	831	19	283	2.9	3	850.2	53.34	96	Oke
Lt 1	L	49.4	61.7	0.0282	0.0212	0.00389	0.0106	18.82	3.43	245	340	T Seb	1.779	0.00549	0.0055	560	19	283	2.0	2	566.8	35.56	36	Oke
As 8-9	T	80.5	100.6	0.0282	0.0212	0.00389	0.0106	18.82	3.43	3 3	340	T Seb	2.901	0.00895	0.0089	913	19	283	3.2	4	1134	71.12	124	Oke
Lt 1	L	37.3	46.6	0.0282	0.0212	0.00389	0.0106	18.82	3.43	2 3	340	T Seb	1.344	0.00415	0.0041	423	19	283	1.5	2	566.8	35.56	36	Oke
As 9-10	T	92.2	115.2	0.0282	0.0212	0.00389	0.0106	18.82	3.43	315	340	T Seb	3.321	0.01025	0.0102	1045	19	283	3.7	4	1134	71.12	124	Oke
Lt 1	L	40.4	50.5	0.0282	0.0212	0.00389	0.0106	18.82	3.43	222	340	T Seb	1.456	0.00449	0.0045	458	19	283	1.6	2	566.8	35.56	36	Oke
As 10-11	T	89.5	111.8	0.0282	0.0212	0.00389	0.0106	18.82	3.43	330	340	T Seb	3.225	0.00995	0.0099	1015	19	283	3.6	4	1134	71.12	124	Oke
Lt 1	L	37.1	46.4	0.0282	0.0212	0.00389	0.0106	18.82	3.43	212	340	T Seb	1.337	0.00412	0.0041	421	19	283	1.5	2	566.8	35.56	36	Oke
As 11-12	T	88.9	111.1	0.0282	0.0212	0.00389	0.0106	18.82	3.43	329	340	T Seb	3.204	0.00988	0.0099	1003	19	283	3.6	4	1134	71.12	124	Oke
Lt 1	L	48.4	60.5	0.0282	0.0212	0.00389	0.0106	18.82	3.43	242	340	T Seb	1.743	0.00538	0.0054	549	19	283	1.9	2	566.8	35.56	36	Oke
As 7-8	T	76.8	96.0	0.0282	0.0212	0.00389	0.0106	18.82	3.43	305	340	T Seb	2.767	0.00854	0.0085	871	19	283	3.1	4	1134	71.12	124	Oke
Lt 2	L	45.7	57.2	0.0282	0.0212	0.00389	0.0106	18.82	3.43	236	340	T Seb	1.648	0.00508	0.0051	519	19	283	1.8	2	566.8	35.56	36	Oke
As 8-9	T	73.1	91.4	0.0282	0.0212	0.00389	0.0106	18.82	3.43	298	340	T Seb	2.636	0.00813	0.0081	829	19	283	2.9	3	850.2	53.34	96	Oke
Lt 2	L	48.0	60.0	0.0282	0.0212	0.00389	0.0106	18.82	3.43	242	340	T Seb	1.731	0.00534	0.0053	545	19	283	1.9	2	566.8	35.56	36	Oke
As 10-11	T	93.6	117.0	0.0282	0.0212	0.00389	0.0106	18.82	3.43	337	340	T Seb	3.372	0.0104	0.0104	1061	19	283	3.7	4	1134	71.12	124	Oke
Lt 2	L	48.0	60.0	0.0282	0.0212	0.00389	0.0106	18.82	3.43	241	340	T Seb	1.729	0.00534	0.0053	544	19	283	1.9	2	566.8	35.56	36	Oke
As 11-12	T	86.5	108.1	0.0282	0.0212	0.00389	0.0106	18.82	3.43	324	340	T Seb	3.116	0.00961	0.0096	981	19	283	3.5	4	1134	71.12	124	Oke
Lt 2	L	45.7	57.1	0.0282	0.0212	0.00389	0.0106	18.82	3.43	236	340	T Seb	1.646	0.00508	0.0051	518	19	283	1.8	2	566.8	35.56	36	Oke
As 7-8	T	63.5	79.4	0.0282	0.0212	0.00389	0.0106	18.82	3.43	278	340	T Seb	2.289	0.00706	0.0071	720	19	283	2.5	3	850.2	53.34	96	Oke
Lt 3	L	47.6	59.6	0.0282	0.0212	0.00389	0.0106	18.82	3.43	241	340	T Seb	1.717	0.0053	0.0053	540	19	283	1.9	2	566.8	35.56	36	Oke
As 8-9	T	86.7	108.4	0.0282	0.0212	0.00389	0.0106	18.82	3.43	324	340	T Seb	3.124	0.00964	0.0096	983	19	283	3.5	4	1134	71.12	124	Oke
Lt 3	L	53.6	67.0	0.0282	0.0212	0.00389	0.0106	18.82	3.43	255	340	T Seb	1.932	0.00596	0.006	608	19	283	2.1	3	850.2	53.34	96	Oke
As 10-11	T	87.6	109.5	0.0282	0.0212	0.00389	0.0106	18.82	3.43	326	340	T Seb	3.158	0.00974	0.0097	994	19	283	3.5	4	1134	71.12	124	Oke
Lt 3	L	53.5	66.8	0.0282	0.0212	0.00389	0.0106	18.82	3.43	255	340	T Seb	1.927	0.00594	0.0059	606	19	283	2.1	3	850.2	53.34	96	Oke
As 11-12	T	68.6	85.8	0.0282	0.0212	0.00389	0.0106	18.82	3.43	289	340	T Seb	2.473	0.00763	0.0076	778	19	283	2.7	3	850.2	53.34	96	Oke
Lt 3	L	47.6	59.4	0.0282	0.0212	0.00389	0.0106	18.82	3.43	240	340	T Seb	1.714	0.00529	0.0053	539	19	283	1.9	2	566.8	35.56	36	Oke
	T	68.7	85.9	0.0282	0.0212	0.00389	0.0106	18.82	3.43	289	340	T Seb	2.477	0.00764	0.0076	779	19	283	2.8	3	850.2	53.34	96	Oke
Sloof	L	11.4	14.2	0.0282	0.0212	0.00389	0.0106	18.82	3.43	118	340	T Seb	0.411	0.00127	0.0039	397	19	283	1.4	2	566.8	35.56	36	Oke
	T	47.5	59.3	0.0282	0.0212	0.00389	0.0106	18.82	3.43	240	340	T Seb	1.711	0.00528	0.0053	538	16	201	2.7	3	602.9	37.83	70	Oke
Ringbalk	L	14.6	18.2	0.0282	0.0212	0.00389	0.0106	18.82	3.43	133	340	T Seb	0.526	0.00162	0.0039	397	16	201	2.0	2	401.9	25.22	47	Oke

PERHITUNGAN TULANGAN BALOK INDUK

Dimensi Balok Induk = 300 x 400 mm
fc' = 22.5 mpa
fy = 360 mpa

Lampiran 12

PORTAL ARAH X ; Y= 18 M (PORTAL D)

FRM		Mu KNm	Mu/ϕ KNm	ρb	ρ maks	ρ min	ρ pakai	m mm	Rn perlu	d perlu mm	d pakai mm	Tul Pakai	Rn baru	ρ baru	ρ pakai	Asperlu mm2	∅ mm	A Ø mm2	n	Tul Pakai	As ada mm2	a mm	Mn KNm	Cek
As 7-8	T	99.8	124.7	0.0282	0.0212	0.00389	0.0106	18.82	3.43	348	348.11	T Rang	3.431	0.01058	0.0106	1105	19	283	3.9	4	1134	71.12	128	Oke
Lt 1	L	48.9	61.2	0.0282	0.0212	0.00389	0.0106	18.82	3.43	244	340	T Seb	1.763	0.00544	0.0054	555	19	283	2.0	2	566.8	35.56	66	Oke
As 8-9	T	94.3	117.9	0.0282	0.0212	0.00389	0.0106	18.82	3.43	338	340	T Seb	3.4	0.01049	0.0105	1070	19	283	3.8	4	1134	71.12	124	Oke
Lt 1	L	38.3	47.9	0.0282	0.0212	0.00389	0.0106	18.82	3.43	216	340	T Seb	1.38	0.00426	0.0043	434	19	283	1.5	2	566.8	35.56	66	Oke
As 9-10	T	92.4	115.5	0.0282	0.0212	0.00389	0.0106	18.82	3.43	335	340	T Seb	3.329	0.01027	0.0103	1048	19	283	3.7	4	1134	71.12	124	Oke
Lt 1	L	39.7	49.6	0.0282	0.0212	0.00389	0.0106	18.82	3.43	219	340	T Seb	1.429	0.00441	0.0044	450	19	283	1.6	2	566.8	35.56	66	Oke
As 10-11	T	91.2	113.9	0.0282	0.0212	0.00389	0.0106	18.82	3.43	333	340	T Seb	3.285	0.01014	0.0101	1034	19	283	3.6	4	1134	71.12	124	Oke
Lt 1	L	38.1	47.7	0.0282	0.0212	0.00389	0.0106	18.82	3.43	215	340	T Seb	1.374	0.00424	0.0042	432	19	283	1.5	2	566.8	35.56	66	Oke
As 11-12	T	85.7	107.1	0.0282	0.0212	0.00389	0.0106	18.82	3.43	323	340	T Seb	3.087	0.00952	0.0095	971	19	283	3.4	4	1134	71.12	124	Oke
Lt 1	L	48.9	61.1	0.0282	0.0212	0.00389	0.0106	18.82	3.43	244	340	T Seb	1.763	0.00544	0.0054	555	19	283	2.0	2	566.8	35.56	66	Oke
As 7-8	T	86.9	108.6	0.0282	0.0212	0.00389	0.0106	18.82	3.43	325	340	T Seb	3.131	0.00966	0.0097	985	19	283	3.5	4	1134	71.12	124	Oke
Lt 2	L	46.6	58.2	0.0282	0.0212	0.00389	0.0106	18.82	3.43	238	340	T Seb	1.679	0.00518	0.0052	528	19	283	1.9	2	566.8	35.56	66	Oke
As 8-9	T	84.2	105.3	0.0282	0.0212	0.00389	0.0106	18.82	3.43	320	340	T Seb	3.036	0.00937	0.0094	955	19	283	3.4	4	1134	71.12	124	Oke
Lt 2	L	41.0	51.3	0.0282	0.0212	0.00389	0.0106	18.82	3.43	223	340	T Seb	1.479	0.00456	0.0046	465	19	283	1.6	2	566.8	35.56	66	Oke
As 9-10	T	86.8	108.5	0.0282	0.0212	0.00389	0.0106	18.82	3.43	325	340	T Seb	3.129	0.00965	0.0097	985	19	283	3.5	4	1134	71.12	124	Oke
Lt 2	L	35.8	44.8	0.0282	0.0212	0.00389	0.0106	18.82	3.43	209	340	T Seb	1.29	0.00398	0.004	406	19	283	1.4	2	566.8	35.56	66	Oke
As 10-11	T	81.0	101.3	0.0282	0.0212	0.00389	0.0106	18.82	3.43	314	340	T Seb	2.921	0.00901	0.009	919	19	283	3.2	4	1134	71.12	124	Oke
Lt 2	L	40.8	51.0	0.0282	0.0212	0.00389	0.0106	18.82	3.43	223	340	T Seb	1.471	0.00454	0.0045	463	19	283	1.6	2	566.8	35.56	66	Oke
As 11-12	T	77.3	96.6	0.0282	0.0212	0.00389	0.0106	18.82	3.43	306	340	T Seb	2.786	0.0086	0.0086	877	19	283	3.1	4	1134	71.12	124	Oke
Lt 2	L	46.6	58.2	0.0282	0.0212	0.00389	0.0106	18.82	3.43	238	340	T Seb	1.678	0.00518	0.0052	528	19	283	1.9	2	566.8	35.56	66	Oke
As 7-8	T	64.1	80.1	0.0282	0.0212	0.00389	0.0106	18.82	3.43	279	340	T Seb	2.309	0.00712	0.0071	726	19	283	2.6	3	850.2	53.34	96	Oke
Lt 3	L	49.3	61.6	0.0282	0.0212	0.00389	0.0106	18.82	3.43	245	340	T Seb	1.776	0.00548	0.0055	559	19	283	2.0	2	566.8	35.56	66	Oke
As 8-9	T	71.7	89.6	0.0282	0.0212	0.00389	0.0106	18.82	3.43	295	340	T Seb	2.584	0.00797	0.008	813	19	283	2.9	3	850.2	53.34	96	Oke
Lt 3	L	41.1	51.3	0.0282	0.0212	0.00389	0.0106	18.82	3.43	223	340	T Seb	1.48	0.00457	0.0046	466	19	283	1.6	2	566.8	35.56	66	Oke
As 9-10	T	76.5	95.6	0.0282	0.0212	0.00389	0.0106	18.82	3.43	305	340	T Seb	2.756	0.0085	0.0085	867	19	283	3.1	4	1134	71.12	124	Oke
Lt 3	L	33.6	42.0	0.0282	0.0212	0.00389	0.0106	18.82	3.43	202	340	T Seb	1.212	0.00374	0.0039	397	19	283	1.4	2	566.8	35.56	66	Oke
As 10-11	T	72.3	90.4	0.0282	0.0212	0.00389	0.0106	18.82	3.43	296	340	T Seb	2.606	0.00804	0.008	820	19	283	2.9	3	850.2	53.34	96	Oke
Lt 3	L	40.7	50.9	0.0282	0.0212	0.00389	0.0106	18.82	3.43	222	340	T Seb	1.467	0.00452	0.0045	462	19	283	1.6	2	566.8	35.56	66	Oke
As 11-12	T	70.1	87.6	0.0282	0.0212	0.00389	0.0106	18.82	3.43	292	340	T Seb	2.527	0.0078	0.0078	795	19	283	2.8	3	850.2	53.34	96	Oke
Lt 3	L	49.2	61.5	0.0282	0.0212	0.00389	0.0106	18.82	3.43	244	340	T Seb	1.773	0.00547	0.0055	558	19	283	2.0	2	566.8	35.56	66	Oke
	T	65.1	81.3	0.0282	0.0212	0.00389	0.0106	18.82	3.43	281	340	T Seb	2.345	0.00724	0.0072	738	19	283	2.6	3	850.2	53.34	96	Oke
Sloof	L	10.7	13.4	0.0282	0.0212	0.00389	0.0106	18.82	3.43	114	340	T Seb	0.385	0.00119	0.0039	397	19	283	1.4	2	566.8	35.56	66	Oke
	T	47.9	59.8	0.0282	0.0212	0.00389	0.0106	18.82	3.43	241	340	T Seb	1.725	0.00532	0.0053	543	16	201	2.7	3	602.9	37.83	70	Oke
Ringbalk	L	14.3	17.9	0.0282	0.0212	0.00389	0.0106	18.82	3.43	132	340	T Seb	0.517	0.00159	0.0039	397	16	201	2.0	2	401.9	25.22	47	Oke

PERHITUNGAN TULANGAN BALOK INDUK

Dimensi Balok Induk = 300 x 400 mm
fc' = 22.5 mpa
fy = 360 mpa

Lampiran 13

PORTAL ARAH X ; Y= 24 M (PORTAL E)

FRM		Mu KNm	Mu/ϕ KNm	ρb	ρ maks	ρ min	ρ pakai	m mm	Rn perlu	d perlu mm	d pakai mm	Tul Pakai	Rn baru	ρ baru	ρ pakai	Asperlu mm2	Ø mm	A Ø mm2	n	Tul Pakai	As ada mm2	a mm	Mn KNm	Cek
As 7-8	T	99.4	124.2	0.0282	0.0212	0.00389	0.0106	18.82	3.43	347	347.39	T Rang	3.431	0.01058	0.0106	1103	19	283	3.9	4	1134	71.12	127	Oke
Lt 1	L	48.5	60.6	0.0282	0.0212	0.00389	0.0106	18.82	3.43	243	340	T Seb	1.747	0.00539	0.0054	550	19	283	1.9	2	566.8	35.56	66	Oke
As 8-9	T	92.0	114.9	0.0282	0.0212	0.00389	0.0106	18.82	3.43	334	340	T Seb	3.314	0.01022	0.0102	1043	19	283	3.7	4	1134	71.12	124	Oke
Lt 1	L	38.5	48.2	0.0282	0.0212	0.00389	0.0106	18.82	3.43	216	340	T Seb	1.389	0.00429	0.0043	437	19	283	1.5	2	566.8	35.56	66	Oke
As 9-10	T	91.8	114.7	0.0282	0.0212	0.00389	0.0106	18.82	3.43	334	340	T Seb	3.307	0.0102	0.0102	1041	19	283	3.7	4	1134	71.12	124	Oke
Lt 1	L	39.5	49.4	0.0282	0.0212	0.00389	0.0106	18.82	3.43	219	340	T Seb	1.424	0.00439	0.0044	448	19	283	1.6	2	566.8	35.56	66	Oke
As 10-11	T	91.8	114.8	0.0282	0.0212	0.00389	0.0106	18.82	3.43	334	340	T Seb	3.309	0.01021	0.0102	1041	19	283	3.7	4	1134	71.12	124	Oke
Lt 1	L	38.4	48.0	0.0282	0.0212	0.00389	0.0106	18.82	3.43	216	340	T Seb	1.383	0.00427	0.0043	435	19	283	1.5	2	566.8	35.56	66	Oke
As 11-12	T	84.4	105.6	0.0282	0.0212	0.00389	0.0106	18.82	3.43	320	340	T Seb	3.044	0.00939	0.0094	958	19	283	3.4	4	1134	71.12	124	Oke
Lt 1	L	48.7	60.9	0.0282	0.0212	0.00389	0.0106	18.82	3.43	243	340	T Seb	1.755	0.00541	0.0054	552	19	283	1.9	2	566.8	35.56	66	Oke
As 7-8	T	86.3	108.6	0.0282	0.0212	0.00389	0.0106	18.82	3.43	325	340	T Seb	3.13	0.00966	0.0097	985	19	283	3.5	4	1134	71.12	124	Oke
Lt 2	L	46.7	58.3	0.0282	0.0212	0.00389	0.0106	18.82	3.43	238	340	T Seb	1.682	0.00519	0.0052	529	19	283	1.9	2	566.8	35.56	66	Oke
As 8-9	T	84.3	106.2	0.0282	0.0212	0.00389	0.0106	18.82	3.43	321	340	T Seb	3.061	0.00944	0.0094	963	19	283	3.4	4	1134	71.12	124	Oke
Lt 2	L	39.4	49.2	0.0282	0.0212	0.00389	0.0106	18.82	3.43	219	340	T Seb	1.42	0.00438	0.0044	447	19	283	1.6	2	566.8	35.56	66	Oke
As 9-10	T	83.7	104.6	0.0282	0.0212	0.00389	0.0106	18.82	3.43	319	340	T Seb	3.017	0.00931	0.0093	949	19	283	3.4	4	1134	71.12	124	Oke
Lt 2	L	39.1	48.8	0.0282	0.0212	0.00389	0.0106	18.82	3.43	218	340	T Seb	1.408	0.00434	0.0043	443	19	283	1.6	2	566.8	35.56	66	Oke
As 10-11	T	81.7	102.1	0.0282	0.0212	0.00389	0.0106	18.82	3.43	315	340	T Seb	2.944	0.00908	0.0091	927	19	283	3.3	4	1134	71.12	124	Oke
Lt 2	L	39.2	49.0	0.0282	0.0212	0.00389	0.0106	18.82	3.43	218	340	T Seb	1.412	0.00436	0.0044	444	19	283	1.6	2	566.8	35.56	66	Oke
As 11-12	T	76.7	95.8	0.0282	0.0212	0.00389	0.0106	18.82	3.43	305	340	T Seb	2.763	0.00852	0.0085	869	19	283	3.1	4	1134	71.12	124	Oke
Lt 2	L	46.7	58.3	0.0282	0.0212	0.00389	0.0106	18.82	3.43	238	340	T Seb	1.682	0.00519	0.0052	529	19	283	1.9	2	566.8	35.56	66	Oke
As 7-8	T	64.3	80.4	0.0282	0.0212	0.00389	0.0106	18.82	3.43	279	340	T Seb	2.317	0.00715	0.0071	729	19	283	2.6	3	850.2	53.34	96	Oke
Lt 3	L	49.5	61.9	0.0282	0.0212	0.00389	0.0106	18.82	3.43	245	340	T Seb	1.783	0.0055	0.0055	561	19	283	2.0	2	566.8	35.56	66	Oke
As 8-9	T	65.7	82.1	0.0282	0.0212	0.00389	0.0106	18.82	3.43	282	340	T Seb	2.367	0.0073	0.0073	745	19	283	2.6	3	850.2	53.34	96	Oke
Lt 3	L	38.4	48.0	0.0282	0.0212	0.00389	0.0106	18.82	3.43	216	340	T Seb	1.383	0.00427	0.0043	435	19	283	1.5	2	566.8	35.56	66	Oke
As 9-10	T	71.1	88.9	0.0282	0.0212	0.00389	0.0106	18.82	3.43	294	340	T Seb	2.563	0.00791	0.0079	806	19	283	2.8	3	850.2	53.34	96	Oke
Lt 3	L	39.0	48.7	0.0282	0.0212	0.00389	0.0106	18.82	3.43	218	340	T Seb	1.405	0.00434	0.0043	442	19	283	1.6	2	566.8	35.56	66	Oke
As 10-11	T	73.2	91.5	0.0282	0.0212	0.00389	0.0106	18.82	3.43	298	340	T Seb	2.638	0.00814	0.0081	830	19	283	2.9	3	850.2	53.34	96	Oke
Lt 3	L	38.0	47.5	0.0282	0.0212	0.00389	0.0106	18.82	3.43	215	340	T Seb	1.368	0.00422	0.0042	431	19	283	1.5	2	566.8	35.56	66	Oke
As 11-12	T	70.5	88.2	0.0282	0.0212	0.00389	0.0106	18.82	3.43	293	340	T Seb	2.542	0.00784	0.0078	800	19	283	2.8	3	850.2	53.34	96	Oke
Lt 3	L	49.4	61.8	0.0282	0.0212	0.00389	0.0106	18.82	3.43	245	340	T Seb	1.782	0.0055	0.0055	561	19	283	2.0	2	566.8	35.56	66	Oke
	T	63.5	79.3	0.0282	0.0212	0.00389	0.0106	18.82	3.43	278	340	T Seb	2.288	0.00706	0.0071	720	19	283	2.5	3	850.2	53.34	96	Oke
Sloof	L	10.5	13.1	0.0282	0.0212	0.00389	0.0106	18.82	3.43	113	340	T Seb	0.377	0.00116	0.0039	397	19	283	1.4	2	566.8	35.56	66	Oke
	T	47.2	59.0	0.0282	0.0212	0.00389	0.0106	18.82	3.43	239	340	T Seb	1.7	0.00524	0.0052	535	16	201	2.7	3	602.9	37.83	70	Oke
Ringpalk	L	14.3	17.8	0.0282	0.0212	0.00389	0.0106	18.82	3.43	132	340	T Seb	0.514	0.00159	0.0039	397	13	201	2.0	2	401.9	25.22	47	Oke

PERHITUNGAN TULANGAN BALOK INDUK

Dimensi Balok Induk = 300 x 400 mm
fc' = 22.5 mpa
fy = 360 mpa

Lampiran 15

PORTAL ARAH X ; Y= 36 M (PORTAL G)

FRM		Mu KNm	Mu/ϕ KNm	ρb	ρ maks	ρ min	ρ pakai	m mm	Rn perlu	d perlu mm	d pakai mm	Tul Pakai	Rn baru	ρ baru	ρ pakai	Asperlu mm2	Ø mm	A Ø mm2	n	Tul Pakai	As ada mm2	a mm	Mn KNm	Cek
As 7-8	T	80.3	100.3	0.0282	0.0212	0.00389	0.0106	18.82	3.43	312	340	T Seb	2.893	0.00892	0.0089	910	19	283	3.2	4	1134	71.12	124	Oke
Lt 1	L	47.6	59.5	0.0282	0.0212	0.00389	0.0106	18.82	3.43	241	340	T Seb	1.717	0.0053	0.0053	540	19	283	1.9	2	566.8	35.56	66	Oke
As 8-9	T	96.4	120.5	0.0282	0.0212	0.00389	0.0106	18.82	3.43	342	342.14	T Rang	3.431	0.01058	0.0106	1086	19	283	3.8	4	1134	71.12	125	Oke
Lt 1	L	39.6	49.5	0.0282	0.0212	0.00389	0.0106	18.82	3.43	219	340	T Seb	1.427	0.0044	0.0044	449	19	283	1.6	2	566.8	35.56	66	Oke
As 9-10	T	96.3	120.3	0.0282	0.0212	0.00389	0.0106	18.82	3.43	342	341.91	T Rang	3.431	0.01058	0.0106	1086	19	283	3.8	4	1134	71.12	125	Oke
Lt 1	L	40.2	50.2	0.0282	0.0212	0.00389	0.0106	18.82	3.43	221	340	T Seb	1.448	0.00447	0.0045	456	19	283	1.6	2	566.8	35.56	66	Oke
As 10-11	T	95.7	119.6	0.0282	0.0212	0.00389	0.0106	18.82	3.43	341	340.93	T Rang	3.431	0.01058	0.0106	1082	19	283	3.8	4	1134	71.12	125	Oke
Lt 1	L	39.5	49.4	0.0282	0.0212	0.00389	0.0106	18.82	3.43	219	340	T Seb	1.424	0.00439	0.0044	448	19	283	1.6	2	566.8	35.56	66	Oke
As 11-12	T	92.7	115.8	0.0282	0.0212	0.00389	0.0106	18.82	3.43	335	340	T Seb	3.339	0.0103	0.0103	1051	19	283	3.7	4	1134	71.12	124	Oke
Lt 1	L	47.6	59.5	0.0282	0.0212	0.00389	0.0106	18.82	3.43	240	340	T Seb	1.716	0.00529	0.0053	540	19	283	1.9	2	566.8	35.56	66	Oke
As 7-8	T	90.9	113.6	0.0282	0.0212	0.00389	0.0106	18.82	3.43	332	340	T Seb	3.275	0.0101	0.0101	1031	19	283	3.6	4	1134	71.12	124	Oke
Lt 2	L	47.7	59.7	0.0282	0.0212	0.00389	0.0106	18.82	3.43	241	340	T Seb	1.72	0.00531	0.0053	541	19	283	1.9	2	566.8	35.56	66	Oke
As 8-9	T	88.8	111.0	0.0282	0.0212	0.00389	0.0106	18.82	3.43	328	340	T Seb	3.2	0.00987	0.0099	1007	19	283	3.6	4	1134	71.12	124	Oke
Lt 2	L	39.6	49.6	0.0282	0.0212	0.00389	0.0106	18.82	3.43	219	340	T Seb	1.429	0.00441	0.0044	450	19	283	1.6	2	566.8	35.56	66	Oke
As 9-10	T	87.8	109.8	0.0282	0.0212	0.00389	0.0106	18.82	3.43	327	340	T Seb	3.166	0.00977	0.0098	996	19	283	3.5	4	1134	71.12	124	Oke
Lt 2	L	40.0	50.0	0.0282	0.0212	0.00389	0.0106	18.82	3.43	220	340	T Seb	1.441	0.00444	0.0044	453	19	283	1.6	2	566.8	35.56	66	Oke
As 10-11	T	86.6	108.2	0.0282	0.0212	0.00389	0.0106	18.82	3.43	324	340	T Seb	3.121	0.00963	0.0096	982	19	283	3.5	4	1134	71.12	124	Oke
Lt 2	L	39.8	49.8	0.0282	0.0212	0.00389	0.0106	18.82	3.43	220	340	T Seb	1.436	0.00443	0.0044	452	19	283	1.6	2	566.8	35.56	66	Oke
As 11-12	T	82.9	103.6	0.0282	0.0212	0.00389	0.0106	18.82	3.43	317	340	T Seb	2.988	0.00922	0.0092	940	19	283	3.3	4	1134	71.12	124	Oke
Lt 2	L	46.7	58.4	0.0282	0.0212	0.00389	0.0106	18.82	3.43	238	340	T Seb	1.683	0.00519	0.0052	529	19	283	1.9	2	566.8	35.56	66	Oke
As 7-8	T	62.1	77.6	0.0282	0.0212	0.00389	0.0106	18.82	3.43	275	340	T Seb	2.237	0.0069	0.0069	704	19	283	2.5	3	850.2	53.34	96	Oke
Lt 3	L	39.4	49.3	0.0282	0.0212	0.00389	0.0106	18.82	3.43	219	340	T Seb	1.421	0.00438	0.0044	447	19	283	1.6	2	566.8	35.56	66	Oke
As 8-9	T	77.7	97.2	0.0282	0.0212	0.00389	0.0106	18.82	3.43	307	340	T Seb	2.802	0.00864	0.0086	882	19	283	3.1	4	1134	71.12	124	Oke
Lt 3	L	40.4	50.5	0.0282	0.0212	0.00389	0.0106	18.82	3.43	221	340	T Seb	1.456	0.00449	0.0045	458	19	283	1.6	2	566.8	35.56	66	Oke
As 9-10	T	76.5	95.7	0.0282	0.0212	0.00389	0.0106	18.82	3.43	305	340	T Seb	2.758	0.00851	0.0085	868	19	283	3.1	4	1134	71.12	124	Oke
Lt 3	L	39.6	49.5	0.0282	0.0212	0.00389	0.0106	18.82	3.43	219	340	T Seb	1.427	0.0044	0.0044	449	19	283	1.6	2	566.8	35.56	66	Oke
As 10-11	T	77.5	96.9	0.0282	0.0212	0.00389	0.0106	18.82	3.43	307	340	T Seb	2.795	0.00862	0.0086	879	19	283	3.1	4	1134	71.12	124	Oke
Lt 3	L	40.2	50.2	0.0282	0.0212	0.00389	0.0106	18.82	3.43	221	340	T Seb	1.448	0.00447	0.0045	456	19	283	1.6	2	566.8	35.56	66	Oke
As 11-12	T	61.9	77.4	0.0282	0.0212	0.00389	0.0106	18.82	3.43	274	340	T Seb	2.231	0.00688	0.0069	702	19	283	2.5	3	850.2	53.34	96	Oke
Lt 3	L	39.4	49.2	0.0282	0.0212	0.00389	0.0106	18.82	3.43	219	340	T Seb	1.419	0.00438	0.0044	447	19	283	1.6	2	566.8	35.56	66	Oke
	T	77.6	97.0	0.0282	0.0212	0.00389	0.0106	18.82	3.43	307	340	T Seb	2.797	0.00863	0.0086	880	19	283	3.1	4	1134	71.12	124	Oke
Sloof	L	24.5	30.7	0.0282	0.0212	0.00389	0.0106	18.82	3.43	173	340	T Seb	0.885	0.00273	0.0039	397	19	283	1.4	2	566.8	35.56	36	Oke
	T	48.1	60.2	0.0282	0.0212	0.00389	0.0106	18.82	3.43	242	340	T Seb	1.735	0.00535	0.0054	546	16	201	2.7	3	602.9	37.83	70	Oke
Ringbalk	L	15.1	18.9	0.0282	0.0212	0.00389	0.0106	18.82	3.43	136	340	T Seb	0.545	0.00168	0.0039	397	16	201	2.0	2	401.9	25.22	47	Oke

PERHITUNGAN TULANGAN BALOK INDUK

fc' = 22.5 mpa Dimensi Balok Induk = 350 x 550 mm

fy = 360 mpa

PORTAL ARAH Y ; X = 0 M (PORTAL 7)

Lampiran 17

FRM		Mu KNm	Mu/ϕ KNm	ρb	ρ maks	ρ min	ρ pakai	m mm	Rn perlu	d perlu mm	d pakai mm	Tul Pakai	Rn baru	ρ baru	ρ pakai	As perlu mm2	Ø mm	A Ø mm2	n	Tul Pakai	As ada mm2	a mm	Mn KNm	Cek
As A-B	T	135.8	169.7	0.0282	0.02117	0.0039	0.01058	18.82	3.431	376	450	T Seb	2.394	0.0074	0.0074	1163	19	283.4	4.1	5	1417	76 204	210	Oke
Lt 1	L	96.8	121.0	0.0282	0.02117	0.0039	0.01058	18.82	3.431	317	450	T Seb	1.707	0.0053	0.0053	830	19	283.4	2.9	3	850	45 723	131	Oke
As B-C	T	136.5	170.7	0.0282	0.02117	0.0039	0.01058	18.82	3.431	377	450	T Seb	2.408	0.0074	0.0074	1170	19	283.4	4.1	5	1417	76 204	210	Oke
Lt 1	L	82.3	102.9	0.0282	0.02117	0.0039	0.01058	18.82	3.431	293	450	T Seb	1.452	0.0045	0.0045	705	19	283.4	2.5	3	850	45 723	131	Oke
As C-D	T	137.8	172.2	0.0282	0.02117	0.0039	0.01058	18.82	3.431	379	450	T Seb	2.43	0.0075	0.0075	1181	19	283.4	4.2	5	1417	76 204	210	Oke
Lt 1	L	83.6	104.4	0.0282	0.02117	0.0039	0.01058	18.82	3.431	295	450	T Seb	1.474	0.0045	0.0045	716	19	283.4	2.5	3	850	45 723	131	Oke
As D-E	T	137.2	171.5	0.0282	0.02117	0.0039	0.01058	18.82	3.431	378	450	T Seb	2.419	0.0075	0.0075	1175	19	283.4	4.1	5	1417	76 204	210	Oke
Lt 1	L	83.5	104.3	0.0282	0.02117	0.0039	0.01058	18.82	3.431	295	450	T Seb	1.472	0.0045	0.0045	715	19	283.4	2.5	3	850	45 723	131	Oke
As E-F	T	138.2	172.7	0.0282	0.02117	0.0039	0.01058	18.82	3.431	379	450	T Seb	2.437	0.0075	0.0075	1184	19	283.4	4.2	5	1417	76 204	210	Oke
Lt 1	L	82.1	102.6	0.0282	0.02117	0.0039	0.01058	18.82	3.431	292	450	T Seb	1.448	0.0045	0.0045	703	19	283.4	2.5	3	850	45 723	131	Oke
As F-G	T	135.5	169.4	0.0282	0.02117	0.0039	0.01058	18.82	3.431	376	450	T Seb	2.39	0.0074	0.0074	1161	19	283.4	4.1	5	1417	76 204	210	Oke
Lt 1	L	96.6	120.7	0.0282	0.02117	0.0039	0.01058	18.82	3.431	317	450	T Seb	1.703	0.0053	0.0053	827	19	283.4	2.9	3	850	45 723	131	Oke
As A-B	T	136.1	170.1	0.0282	0.02117	0.0039	0.01058	18.82	3.431	376	450	T Seb	2.4	0.0074	0.0074	1166	19	283.4	4.1	5	1417	76 204	210	Oke
Lt 2	L	94.0	117.5	0.0282	0.02117	0.0039	0.01058	18.82	3.431	313	450	T Seb	1.658	0.0051	0.0051	805	19	283.4	2.8	3	850	45 723	131	Oke
As B-C	T	179.3	224.1	0.0282	0.02117	0.0039	0.01058	18.82	3.431	432	450	T Seb	3.162	0.0098	0.0098	1536	19	283.4	5.4	6	1700	91 445	247	Oke
Lt 2	L	116.3	145.4	0.0282	0.02117	0.0039	0.01058	18.82	3.431	343	450	T Seb	2.051	0.0063	0.0063	997	19	283.4	3.5	4	1134	60 963	171	Oke
As C-D	T	128.0	160.0	0.0282	0.02117	0.0039	0.01058	18.82	3.431	365	450	T Seb	2.257	0.0070	0.0070	1097	19	283.4	3.9	4	1134	60 963	171	Oke
Lt 2	L	83.4	104.3	0.0282	0.02117	0.0039	0.01058	18.82	3.431	295	450	T Seb	1.471	0.0045	0.0045	715	19	283.4	2.5	3	850	45 723	131	Oke
As D-E	T	127.2	159.1	0.0282	0.02117	0.0039	0.01058	18.82	3.431	364	450	T Seb	2.244	0.0069	0.0069	1090	19	283.4	3.8	4	1134	60 963	171	Oke
Lt 2	L	83.6	104.5	0.0282	0.02117	0.0039	0.01058	18.82	3.431	295	450	T Seb	1.474	0.0045	0.0045	716	19	283.4	2.5	3	850	45 723	131	Oke
As E-F	T	126.9	158.6	0.0282	0.02117	0.0039	0.01058	18.82	3.431	363	450	T Seb	2.238	0.0069	0.0069	1088	19	283.4	3.8	4	1134	60 963	171	Oke
Lt 2	L	83.4	104.3	0.0282	0.02117	0.0039	0.01058	18.82	3.431	295	450	T Seb	1.471	0.0045	0.0045	715	19	283.4	2.5	3	850	45 723	131	Oke
As F-G	T	131.7	164.6	0.0282	0.02117	0.0039	0.01058	18.82	3.431	370	450	T Seb	2.322	0.0072	0.0072	1128	19	283.4	4.0	4	1134	60 963	171	Oke
Lt 2	L	94.0	117.6	0.0282	0.02117	0.0039	0.01058	18.82	3.431	313	450	T Seb	1.659	0.0051	0.0051	806	19	283.4	2.8	3	850	45 723	131	Oke
As A-B	T	179.0	223.7	0.0282	0.02117	0.0039	0.01058	18.82	3.431	432	450	T Seb	3.157	0.0097	0.0097	1534	19	283.4	5.4	6	1700	91 445	247	Oke
Lt 3	L	101.3	126.6	0.0282	0.02117	0.0039	0.01058	18.82	3.431	325	450	T Seb	1.786	0.0055	0.0055	868	19	283.4	3.1	4	1134	60 963	171	Oke
As B-C	T	129.5	161.8	0.0282	0.02117	0.0039	0.01058	18.82	3.431	367	450	T Seb	2.283	0.0070	0.0070	1110	19	283.4	3.9	4	1134	60 963	171	Oke
Lt 3	L	82.0	102.5	0.0282	0.02117	0.0039	0.01058	18.82	3.431	292	450	T Seb	1.446	0.0045	0.0045	702	19	283.4	2.5	3	850	45 723	131	Oke
As C-D	T	124.4	155.5	0.0282	0.02117	0.0039	0.01058	18.82	3.431	360	450	T Seb	2.195	0.0068	0.0068	1066	19	283.4	3.8	4	1134	60 963	171	Oke
Lt 3	L	83.7	104.6	0.0282	0.02117	0.0039	0.01058	18.82	3.431	295	450	T Seb	1.475	0.0046	0.0046	717	19	283.4	2.5	3	850	45 723	131	Oke
As D-E	T	125.9	157.3	0.0282	0.02117	0.0039	0.01058	18.82	3.431	362	450	T Seb	2.22	0.0068	0.0068	1079	19	283.4	3.8	4	1134	60 963	171	Oke
Lt 3	L	83.8	104.7	0.0282	0.02117	0.0039	0.01058	18.82	3.431	295	450	T Seb	1.477	0.0046	0.0046	718	19	283.4	2.5	3	850	45 723	131	Oke
As E-F	T	124.7	155.8	0.0282	0.02117	0.0039	0.01058	18.82	3.431	360	450	T Seb	2.199	0.0068	0.0068	1068	19	283.4	3.8	4	1134	60 963	171	Oke
Lt 3	L	82.0	102.5	0.0282	0.02117	0.0039	0.01058	18.82	3.431	292	450	T Seb	1.446	0.0045	0.0045	703	19	283.4	2.5	3	850	45 723	131	Oke
As F-G	T	136.3	170.4	0.0282	0.02117	0.0039	0.01058	18.82	3.431	377	450	T Seb	2.404	0.0074	0.0074	1168	19	283.4	4.1	5	1417	76 204	210	Oke
Lt 3	L	101.4	126.7	0.0282	0.02117	0.0039	0.01058	18.82	3.431	325	450	T Seb	1.788	0.0055	0.0055	869	19	283.4	3.1	4	1134	60 963	171	Oke

PERHITUNGAN TULANGAN BALOK INDUK

fc' = 22.5 mpa Dimensi Balok Induk = 350 x 600 mm

fy = 360 mpa

PORTAL ARAH Y ; X = 5 M (PORTAL 8)

Lampiran 18

FRM		Mu KNm	Mu/ϕ KNm	ρb	ρ maks	ρ min	ρ pakai	m mm	Rn perlu	d perlu mm	d pakai mm	Tul Pakai	Rn baru	ρ baru	ρ pakai	Asperlu mm2	Ø mm	A Ø mm2	n	Tul Pakai	As ada mm2	a mm	Mn KNm	Cek
As A-B	T	180.5	225.7	0.0282	0.02117	0.0039	0.01058	18.82	3.431	434	450	T Seb	3.184	0.0098	0.0098	1547	19	283.4	5.5	6	1700.31	91.445	247	Oke
Lt 1	L	156.7	195.8	0.0282	0.02117	0.0039	0.01058	18.82	3.431	404	450	T Seb	2.763	0.0085	0.0085	1343	19	283.4	4.7	5	1416.93	76.204	210	Oke
As B-C	T	183.4	229.2	0.0282	0.02117	0.0039	0.01058	18.82	3.431	437	450	T Seb	3.234	0.0100	0.0100	1571	19	283.4	5.5	6	1700.31	91.445	247	Oke
Lt 1	L	136.0	170.1	0.0282	0.02117	0.0039	0.01058	18.82	3.431	376	450	T Seb	2.399	0.0074	0.0074	1166	19	283.4	4.1	5	1416.93	76.204	210	Oke
As C-D	T	180.0	225.0	0.0282	0.02117	0.0039	0.01058	18.82	3.431	433	450	T Seb	3.175	0.0098	0.0098	1543	19	283.4	5.4	6	1700.31	91.445	247	Oke
Lt 1	L	138.4	173.0	0.0282	0.02117	0.0039	0.01058	18.82	3.431	380	450	T Seb	2.44	0.0075	0.0075	1186	19	283.4	4.2	5	1416.93	76.204	210	Oke
As D-E	T	179.0	223.8	0.0282	0.02117	0.0039	0.01058	18.82	3.431	432	450	T Seb	3.157	0.0097	0.0097	1534	19	283.4	5.4	6	1700.31	91.445	247	Oke
Lt 1	L	138.6	173.2	0.0282	0.02117	0.0039	0.01058	18.82	3.431	380	450	T Seb	2.444	0.0075	0.0075	1187	19	283.4	4.2	5	1416.93	76.204	210	Oke
As E-F	T	185.2	231.4	0.0282	0.02117	0.0039	0.01058	18.82	3.431	439	450	T Seb	3.265	0.0101	0.0101	1587	19	283.4	5.6	6	1700.31	91.445	247	Oke
Lt 1	L	136.6	170.7	0.0282	0.02117	0.0039	0.01058	18.82	3.431	377	450	T Seb	2.409	0.0074	0.0074	1170	19	283.4	4.1	5	1416.93	76.204	210	Oke
As F-G	T	194.9	243.7	0.0282	0.02117	0.0039	0.01058	18.82	3.431	450	450.484	T Rang	3.431	0.0106	0.0106	1669	19	283.4	5.9	6	1700.31	91.445	248	Oke
Lt 1	L	157.0	196.3	0.0282	0.02117	0.0039	0.01058	18.82	3.431	404	450	T Seb	2.77	0.0085	0.0085	1346	19	283.4	4.7	5	1416.93	76.204	210	Oke
As A-B	T	192.2	240.3	0.0282	0.02117	0.0039	0.01058	18.82	3.431	447	450	T Seb	3.39	0.0105	0.0105	1647	19	283.4	5.8	6	1700.31	91.445	247	Oke
Lt 2	L	156.5	195.6	0.0282	0.02117	0.0039	0.01058	18.82	3.431	404	450	T Seb	2.759	0.0085	0.0085	1341	19	283.4	4.7	5	1416.93	76.204	210	Oke
As B-C	T	183.1	228.8	0.0282	0.02117	0.0039	0.01058	18.82	3.431	437	450	T Seb	3.228	0.0100	0.0100	1569	19	283.4	5.5	6	1700.31	91.445	247	Oke
Lt 2	L	142.4	178.0	0.0282	0.02117	0.0039	0.01058	18.82	3.431	385	450	T Seb	2.511	0.0077	0.0077	1220	19	283.4	4.3	5	1416.93	76.204	210	Oke
As C-D	T	182.8	228.5	0.0282	0.02117	0.0039	0.01058	18.82	3.431	436	450	T Seb	3.224	0.0099	0.0099	1567	19	283.4	5.5	6	1700.31	91.445	247	Oke
Lt 2	L	142.3	177.8	0.0282	0.02117	0.0039	0.01058	18.82	3.431	385	450	T Seb	2.509	0.0077	0.0077	1219	19	283.4	4.3	5	1416.93	76.204	210	Oke
As D-E	T	179.2	224.0	0.0282	0.02117	0.0039	0.01058	18.82	3.431	432	450	T Seb	3.161	0.0098	0.0098	1536	19	283.4	5.4	6	1700.31	91.445	247	Oke
Lt 2	L	138.0	172.5	0.0282	0.02117	0.0039	0.01058	18.82	3.431	379	450	T Seb	2.433	0.0075	0.0075	1182	19	283.4	4.2	5	1416.93	76.204	210	Oke
As E-F	T	179.2	224.0	0.0282	0.02117	0.0039	0.01058	18.82	3.431	432	450	T Seb	3.161	0.0098	0.0098	1536	19	283.4	5.4	6	1700.31	91.445	247	Oke
Lt 2	L	137.6	172.0	0.0282	0.02117	0.0039	0.01058	18.82	3.431	379	450	T Seb	2.427	0.0075	0.0075	1179	19	283.4	4.2	5	1416.93	76.204	210	Oke
As F-G	T	188.6	235.8	0.0282	0.02117	0.0039	0.01058	18.82	3.431	443	450	T Seb	3.327	0.0103	0.0103	1616	19	283.4	5.7	6	1700.31	91.445	247	Oke
Lt 2	L	152.1	190.1	0.0282	0.02117	0.0039	0.01058	18.82	3.431	398	450	T Seb	2.683	0.0083	0.0083	1303	19	283.4	4.6	5	1416.93	76.204	210	Oke
As A-B	T	198.7	248.3	0.0282	0.02117	0.0039	0.01058	18.82	3.431	455	454.785	T Rang	3.431	0.0106	0.0106	1685	19	283.4	5.9	6	1700.31	91.445	250	Oke
Lt 3	L	166.6	208.3	0.0282	0.02117	0.0039	0.01058	18.82	3.431	416	450	T Seb	2.939	0.0091	0.0091	1428	19	283.4	5.0	6	1700.31	91.445	247	Oke
As B-C	T	189.7	237.1	0.0282	0.02117	0.0039	0.01058	18.82	3.431	444	450	T Seb	3.345	0.0103	0.0103	1625	19	283.4	5.7	6	1700.31	91.445	247	Oke
Lt 3	L	141.2	176.5	0.0282	0.02117	0.0039	0.01058	18.82	3.431	383	450	T Seb	2.49	0.0077	0.0077	1210	19	283.4	4.3	5	1416.93	76.204	210	Oke
As C-D	T	183.7	229.7	0.0282	0.02117	0.0039	0.01058	18.82	3.431	437	450	T Seb	3.241	0.0100	0.0100	1575	19	283.4	5.6	6	1700.31	91.445	247	Oke
Lt 3	L	143.0	178.7	0.0282	0.02117	0.0039	0.01058	18.82	3.431	386	450	T Seb	2.521	0.0078	0.0078	1225	19	283.4	4.3	5	1416.93	76.204	210	Oke
As D-E	T	180.2	225.2	0.0282	0.02117	0.0039	0.01058	18.82	3.431	433	450	T Seb	3.178	0.0098	0.0098	1544	19	283.4	5.4	6	1700.31	91.445	247	Oke
Lt 3	L	138.6	173.2	0.0282	0.02117	0.0039	0.01058	18.82	3.431	380	450	T Seb	2.444	0.0075	0.0075	1187	19	283.4	4.2	5	1416.93	76.204	210	Oke
As E-F	T	185.1	231.4	0.0282	0.02117	0.0039	0.01058	18.82	3.431	439	450	T Seb	3.264	0.0101	0.0101	1586	19	283.4	5.6	6	1700.31	91.445	247	Oke
Lt 3	L	135.5	169.4	0.0282	0.02117	0.0039	0.01058	18.82	3.431	376	450	T Seb	2.39	0.0074	0.0074	1161	19	283.4	4.1	5	1416.93	76.204	210	Oke
As F-G	T	195.1	243.9	0.0282	0.02117	0.0039	0.01058	18.82	3.431	451	450.692	T Rang	3.431	0.0106	0.0106	1669	19	283.4	5.9	6	1700.31	91.445	248	Oke
Lt 3	L	162.3	202.8	0.0282	0.02117	0.0039	0.01058	18.82	3.431	411	450	T Seb	2.862	0.0088	0.0088	1391	19	283.4	4.9	5	1416.93	76.204	210	Oke

PERHITUNGAN TULANGAN BALOK INDUK

fc' = 22.5 mpa Dimensi Balok Induk = 350 x 600 mm

fy = 360 mpa

PORTAL ARAH Y ; X = 10 M (PORTAL 9)

Lampiran 19

FRM		Mu KNm	Mu/ϕ KNm	ρb	ρ maks	ρ min	ρ pakai	m mm	Rn perlu	d perlu mm	d pakai mm	Tul Pakai	Rn baru	ρ baru	ρ pakai	As perlu mm2	Ø mm	A Ø mm2	n	Tul Pakai	As ada mm2	a mm	Mn KNm	Cek
As A-B	T	195.1	243.9	0.0282	0.02117	0.0039	0.01058	18.82	3.431	451	450.692	T Rang	3.431	0.0106	0.0106	1669	19	283.4	5.9	6	1700	91.445	248	Oke
Lt 1	L	152.9	191.1	0.0282	0.02117	0.0039	0.01058	18.82	3.431	399	450	T Seb	2.693	0.0033	0.0083	1310	19	283.4	4.6	5	1417	76.204	210	Oke
As B-C	T	179.3	224.1	0.0282	0.02117	0.0039	0.01058	18.82	3.431	432	450	T Seb	3.162	0.0098	0.0098	1536	19	283.4	5.4	6	1700	91.445	247	Oke
Lt 1	L	130.1	162.6	0.0282	0.02117	0.0039	0.01058	18.82	3.431	368	450	T Seb	2.294	0.0071	0.0071	1115	19	283.4	3.9	4	1134	60.963	171	Oke
As C-D	T	176.6	220.8	0.0282	0.02117	0.0039	0.01058	18.82	3.431	429	450	T Seb	3.113	0.0096	0.0096	1514	19	283.4	5.3	6	1700	91.445	247	Oke
Lt 1	L	133.8	167.2	0.0282	0.02117	0.0039	0.01058	18.82	3.431	373	450	T Seb	2.36	0.0073	0.0073	1147	19	283.4	4.0	5	1417	76.204	210	Oke
As D-E	T	176.0	220.0	0.0282	0.02117	0.0039	0.01058	18.82	3.431	428	450	T Seb	3.105	0.0096	0.0096	1509	19	283.4	5.3	6	1700	91.445	247	Oke
Lt 1	L	132.6	165.7	0.0282	0.02117	0.0039	0.01058	18.82	3.431	371	450	T Seb	2.338	0.0072	0.0072	1136	19	283.4	4.0	5	1417	76.204	210	Oke
As E-F	T	180.4	225.5	0.0282	0.02117	0.0039	0.01058	18.82	3.431	433	450	T Seb	3.182	0.0098	0.0098	1546	19	283.4	5.5	6	1700	91.445	247	Oke
Lt 1	L	131.0	163.8	0.0282	0.02117	0.0039	0.01058	18.82	3.431	369	450	T Seb	2.311	0.0071	0.0071	1123	19	283.4	4.0	4	1134	60.963	171	Oke
As F-G	T	188.8	236.0	0.0282	0.02117	0.0039	0.01058	18.82	3.431	443	450	T Seb	3.33	0.0103	0.0103	1618	19	283.4	5.7	6	1700	91.445	247	Oke
Lt 1	L	151.2	189.0	0.0282	0.02117	0.0039	0.01058	18.82	3.431	397	450	T Seb	2.666	0.0082	0.0082	1295	19	283.4	4.6	5	1417	76.204	210	Oke
As A-B	T	104.8	131.0	0.0282	0.02117	0.0039	0.01058	18.82	3.431	330	450	T Seb	1.848	0.0057	0.0057	898	19	283.4	3.2	4	1134	60.963	171	Oke
Lt 2	L	71.3	89.1	0.0282	0.02117	0.0039	0.01058	18.82	3.431	272	450	T Seb	1.257	0.0039	0.0039	613	19	283.4	2.2	3	850	45.723	131	Oke
As B-C	T	93.4	116.7	0.0282	0.02117	0.0039	0.01058	18.82	3.431	312	450	T Seb	1.647	0.0051	0.0051	800	19	283.4	2.8	3	850	45.723	131	Oke
Lt 2	L	44.6	55.7	0.0282	0.02117	0.0039	0.01058	18.82	3.431	215	450	T Seb	0.786	0.0024	0.0039	613	19	283.4	2.2	3	850	45.723	131	Oke
As C-D	T	102.9	128.6	0.0282	0.02117	0.0039	0.01058	18.82	3.431	327	450	T Seb	1.815	0.0056	0.0056	882	19	283.4	3.1	4	1134	60.963	171	Oke
Lt 2	L	58.8	73.5	0.0282	0.02117	0.0039	0.01058	18.82	3.431	247	450	T Seb	1.037	0.0032	0.0039	613	19	283.4	2.2	3	850	45.723	131	Oke
As D-E	T	178.9	223.7	0.0282	0.02117	0.0039	0.01058	18.82	3.431	432	450	T Seb	3.156	0.0097	0.0097	1533	19	283.4	5.4	6	1700	91.445	247	Oke
Lt 2	L	139.4	174.2	0.0282	0.02117	0.0039	0.01058	18.82	3.431	381	450	T Seb	2.458	0.0076	0.0076	1194	19	283.4	4.2	5	1417	76.204	210	Oke
As E-F	T	175.5	219.4	0.0282	0.02117	0.0039	0.01058	18.82	3.431	427	450	T Seb	3.095	0.0095	0.0095	1504	19	283.4	5.3	6	1700	91.445	247	Oke
Lt 2	L	132.2	165.3	0.0282	0.02117	0.0039	0.01058	18.82	3.431	371	450	T Seb	2.332	0.0072	0.0072	1133	19	283.4	4.0	4	1134	60.963	171	Oke
As F-G	T	183.5	229.4	0.0282	0.02117	0.0039	0.01058	18.82	3.431	437	450	T Seb	3.236	0.0100	0.0100	1572	19	283.4	5.5	6	1700	91.445	247	Oke
Lt 2	L	146.0	182.6	0.0282	0.02117	0.0039	0.01058	18.82	3.431	390	450	T Seb	2.576	0.0079	0.0079	1252	19	283.4	4.4	5	1417	76.204	210	Oke
As A-B	T	101.0	126.2	0.0282	0.02117	0.0039	0.01058	18.82	3.431	324	450	T Seb	1.781	0.0055	0.0055	865	19	283.4	3.1	4	1134	60.963	171	Oke
Lt 3	L	80.4	100.6	0.0282	0.02117	0.0039	0.01058	18.82	3.431	289	450	T Seb	1.419	0.0044	0.0044	689	19	283.4	2.4	3	850	45.723	131	Oke
As B-C	T	94.7	118.4	0.0282	0.02117	0.0039	0.01058	18.82	3.431	314	450	T Seb	1.67	0.0052	0.0052	811	19	283.4	2.9	3	850	45.723	131	Oke
Lt 3	L	62.1	77.6	0.0282	0.02117	0.0039	0.01058	18.82	3.431	254	450	T Seb	1.095	0.0034	0.0039	613	19	283.4	2.2	3	850	45.723	131	Oke
As C-D	T	108.9	136.1	0.0282	0.02117	0.0039	0.01058	18.82	3.431	337	450	T Seb	1.92	0.0059	0.0059	933	19	283.4	3.3	4	1134	60.963	171	Oke
Lt 3	L	56.2	70.3	0.0282	0.02117	0.0039	0.01058	18.82	3.431	242	450	T Seb	0.991	0.0031	0.0039	613	19	283.4	2.2	3	850	45.723	131	Oke
As D-E	T	177.8	222.2	0.0282	0.02117	0.0039	0.01058	18.82	3.431	430	450	T Seb	3.135	0.0097	0.0097	1523	19	283.4	5.4	6	1700	91.445	247	Oke
Lt 3	L	142.7	178.4	0.0282	0.02117	0.0039	0.01058	18.82	3.431	385	450	T Seb	2.517	0.0078	0.0078	1223	19	283.4	4.3	5	1417	76.204	210	Oke
As E-F	T	181.6	227.0	0.0282	0.02117	0.0039	0.01058	18.82	3.431	435	450	T Seb	3.203	0.0099	0.0099	1556	19	283.4	5.5	6	1700	91.445	247	Oke
Lt 3	L	128.2	160.3	0.0282	0.02117	0.0039	0.01058	18.82	3.431	365	450	T Seb	2.261	0.0070	0.0070	1099	19	283.4	3.9	4	1134	60.963	171	Oke
As F-G	T	194.8	243.5	0.0282	0.02117	0.0039	0.01058	18.82	3.431	450	450.31	T Rang	3.431	0.0106	0.0106	1668	19	283.4	5.9	6	1700	91.445	248	Oke
Lt 3	L	161.9	202.4	0.0282	0.02117	0.0039	0.01058	18.82	3.431	411	450	T Seb	2.855	0.0038	0.0088	1387	19	283.4	4.9	5	1417	76.204	210	Oke

PERHITUNGAN TULANGAN BALOK INDUK

fc' = 22.5 mpa Dimensi Balok Induk = 350 x 600 mm

fy = 360 mpa

Lampiran 20

PORTAL ARAH Y ; X = 15 M (PORTAL 10)

FRM		Mu KNm	Mu/ϕ KNm	ρb	ρ maks	ρ min	ρ pakai	m mm	Rn perlu	d perlu mm	d pakai mm	Tul Pakai	Rn baru	ρ baru	ρ pakai	Asperlu mm2	Ø mm	A Ø mm2	n	Tul Pakai	As ada mm2	a mm	Mn KNm	Cek
As A-B	T	195.3	244.2	0.0282	0.02117	0.0039	0.01058	18.82	3.431	451	450.957	T Rang	3.431	0.0106	0.0106	1670	19	283.4	5.9	6	1700	91 445	248	Oke
Lt 1	L	152.6	190.7	0.0282	0.02117	0.0039	0.01058	18.82	3.431	399	450	T Seb	2.69	0.0083	0.0083	1307	19	283.4	4.6	5	1417	76 204	210	Oke
As B-C	T	174.5	218.1	0.0282	0.02117	0.0039	0.01058	18.82	3.431	426	450	T Seb	3.078	0.0095	0.0095	1495	19	283.4	5.3	6	1700	91 445	247	Oke
Lt 1	L	130.2	162.8	0.0282	0.02117	0.0039	0.01058	18.82	3.431	368	450	T Seb	2.297	0.0071	0.0071	1116	19	283.4	3.9	4	1134	60 963	171	Oke
As C-D	T	176.8	221.0	0.0282	0.02117	0.0039	0.01058	18.82	3.431	429	450	T Seb	3.119	0.0096	0.0096	1515	19	283.4	5.3	6	1700	91 445	247	Oke
Lt 1	L	134.0	167.5	0.0282	0.02117	0.0039	0.01058	18.82	3.431	373	450	T Seb	2.363	0.0073	0.0073	1148	19	283.4	4.1	5	1417	76 204	210	Oke
As D-E	T	176.2	220.2	0.0282	0.02117	0.0039	0.01058	18.82	3.431	428	450	T Seb	3.107	0.0096	0.0096	1510	19	283.4	5.3	6	1700	91 445	247	Oke
Lt 1	L	132.8	165.9	0.0282	0.02117	0.0039	0.01058	18.82	3.431	372	450	T Seb	2.341	0.0072	0.0072	1138	19	283.4	4.0	5	1417	76 204	210	Oke
As E-F	T	180.7	225.8	0.0282	0.02117	0.0039	0.01058	18.82	3.431	434	450	T Seb	3.186	0.0098	0.0098	1548	19	283.4	5.5	6	1700	91 445	247	Oke
Lt 1	L	131.2	164.0	0.0282	0.02117	0.0039	0.01058	18.82	3.431	370	450	T Seb	2.314	0.0071	0.0071	1124	19	283.4	4.0	4	1134	60 963	171	Oke
As F-G	T	189.1	236.4	0.0282	0.02117	0.0039	0.01058	18.82	3.431	444	450	T Seb	3.335	0.0103	0.0103	1620	19	283.4	5.7	6	1700	91 445	247	Oke
Lt 1	L	151.5	189.3	0.0282	0.02117	0.0039	0.01058	18.82	3.431	397	450	T Seb	2.671	0.0082	0.0082	1298	19	283.4	4.6	5	1417	76 204	210	Oke
As A-B	T	104.9	131.1	0.0282	0.02117	0.0039	0.01058	18.82	3.431	330	450	T Seb	1.85	0.0057	0.0057	899	19	283.4	3.2	4	1134	60 963	171	Oke
Lt 2	L	71.9	89.8	0.0282	0.02117	0.0039	0.01058	18.82	3.431	274	450	T Seb	1.268	0.0039	0.0039	616	19	283.4	2.2	3	850	45 723	131	Oke
As B-C	T	92.6	115.7	0.0282	0.02117	0.0039	0.01058	18.82	3.431	310	450	T Seb	1.633	0.0050	0.0050	793	19	283.4	2.8	3	850	45 723	131	Oke
Lt 2	L	65.3	81.6	0.0282	0.02117	0.0039	0.01058	18.82	3.431	261	450	T Seb	1.152	0.0036	0.0039	613	19	283.4	2.2	3	850	45 723	131	Oke
As C-D	T	102.9	128.6	0.0282	0.02117	0.0039	0.01058	18.82	3.431	327	450	T Seb	1.815	0.0056	0.0056	882	19	283.4	3.1	4	1134	60 963	171	Oke
Lt 2	L	59.3	74.1	0.0282	0.02117	0.0039	0.01058	18.82	3.431	248	450	T Seb	1.046	0.0032	0.0039	613	19	283.4	2.2	3	850	45 723	131	Oke
As D-E	T	179.1	223.9	0.0282	0.02117	0.0039	0.01058	18.82	3.431	432	450	T Seb	3.159	0.0097	0.0097	1535	19	283.4	5.4	6	1700	91 445	247	Oke
Lt 2	L	139.5	174.4	0.0282	0.02117	0.0039	0.01058	18.82	3.431	381	450	T Seb	2.461	0.0076	0.0076	1196	19	283.4	4.2	5	1417	76 204	210	Oke
As E-F	T	175.7	219.6	0.0282	0.02117	0.0039	0.01058	18.82	3.431	428	450	T Seb	3.099	0.0096	0.0096	1506	19	283.4	5.3	6	1700	91 445	247	Oke
Lt 2	L	132.4	165.6	0.0282	0.02117	0.0039	0.01058	18.82	3.431	371	450	T Seb	2.336	0.0072	0.0072	1135	19	283.4	4.0	5	1417	76 204	210	Oke
As F-G	T	183.7	229.7	0.0282	0.02117	0.0039	0.01058	18.82	3.431	437	450	T Seb	3.24	0.0100	0.0100	1575	19	283.4	5.6	6	1700	91 445	247	Oke
Lt 2	L	146.4	182.9	0.0282	0.02117	0.0039	0.01058	18.82	3.431	390	450	T Seb	2.581	0.0080	0.0080	1254	19	283.4	4.4	5	1417	76 204	210	Oke
As A-B	T	102.2	127.8	0.0282	0.02117	0.0039	0.01058	18.82	3.431	326	450	T Seb	1.803	0.0056	0.0056	876	19	283.4	3.1	4	1134	60 963	171	Oke
Lt 3	L	81.2	101.5	0.0282	0.02117	0.0039	0.01058	18.82	3.431	291	450	T Seb	1.432	0.0044	0.0044	696	19	283.4	2.5	3	850	45 723	131	Oke
As B-C	T	95.8	119.7	0.0282	0.02117	0.0039	0.01058	18.82	3.431	316	450	T Seb	1.689	0.0052	0.0052	821	19	283.4	2.9	3	850	45 723	131	Oke
Lt 3	L	62.4	78.1	0.0282	0.02117	0.0039	0.01058	18.82	3.431	255	450	T Seb	1.101	0.0034	0.0039	613	19	283.4	2.2	3	850	45 723	131	Oke
As C-D	T	109.6	137.0	0.0282	0.02117	0.0039	0.01058	18.82	3.431	338	450	T Seb	1.933	0.0060	0.0060	939	19	283.4	3.3	4	1134	60 963	171	Oke
Lt 3	L	56.7	70.9	0.0282	0.02117	0.0039	0.01058	18.82	3.431	243	450	T Seb	1	0.0031	0.0039	613	19	283.4	2.2	3	850	45 723	131	Oke
As D-E	T	197.6	247.0	0.0282	0.02117	0.0039	0.01058	18.82	3.431	454	453.512	T Rang	3.431	0.0106	0.0106	1680	19	283.4	5.9	6	1700	91 445	250	Oke
Lt 3	L	145.8	182.2	0.0282	0.02117	0.0039	0.01058	18.82	3.431	390	450	T Seb	2.571	0.0079	0.0079	1249	19	283.4	4.4	5	1417	76 204	210	Oke
As E-F	T	181.9	227.4	0.0282	0.02117	0.0039	0.01058	18.82	3.431	435	450	T Seb	3.208	0.0099	0.0099	1559	19	283.4	5.5	6	1700	91 445	247	Oke
Lt 3	L	128.2	160.3	0.0282	0.02117	0.0039	0.01058	18.82	3.431	365	450	T Seb	2.262	0.0070	0.0070	1099	19	283.4	3.9	4	1134	60 963	171	Oke
As F-G	T	195.1	243.9	0.0282	0.02117	0.0039	0.01058	18.82	3.431	451	450.68	T Rang	3.431	0.0106	0.0106	1669	19	283.4	5.9	6	1700	91 445	248	Oke
Lt 3	L	162.3	202.9	0.0282	0.02117	0.0039	0.01058	18.82	3.431	411	450	T Seb	2.863	0.0088	0.0088	1391	19	283.4	4.9	5	1417	76 204	210	Oke

PERHITUNGAN TULANGAN BALOK INDUK

fc' = 22.5 mpa Dimensi Balok Induk = 350 x 600 mm

fy = 360 mpa

PORTAL ARAH Y ; X = 25 M (PORTAL 12)

Lampiran 22

FRM		Mu KNm	Mu/ϕ KNm	ρb	ρ maks	ρ min	ρ pakai	m mm	Rn perlu	d perlu mm	d pakai mm	Tul Pakai	Rn baru	ρ baru	ρ pakai	Asperlu mm2	Ø mm	A Ø mm2	n	Tul Pakai	As ada mm2	a mm	Mn KNm	Cek
As A-B	T	185.2	231.4	0.0282	0.02117	0.0039	0.01058	18.82	3.431	439	450	T Seb	3.265	0.0101	0.0101	1587	19	283.4	5.6	6	1700	91 445	247	Oke
Lt 1	L	120.3	150.3	0.0282	0.02117	0.0039	0.01058	18.82	3.431	354	450	T Seb	2.121	0.0065	0.0065	1031	19	283.4	3.6	4	1134	60 963	171	Oke
As B-C	T	175.8	219.7	0.0282	0.02117	0.0039	0.01058	18.82	3.431	428	450	T Seb	3.1	0.0096	0.0096	1506	19	283.4	5.3	6	1700	91 445	247	Oke
Lt 1	L	100.6	125.7	0.0282	0.02117	0.0039	0.01058	18.82	3.431	324	450	T Seb	1.774	0.0055	0.0055	862	19	283.4	3.0	4	1134	60 963	171	Oke
As C-D	T	171.6	214.5	0.0282	0.02117	0.0039	0.01058	18.82	3.431	423	450	T Seb	3.026	0.0093	0.0093	1471	19	283.4	5.2	6	1700	91 445	247	Oke
Lt 1	L	102.3	127.9	0.0282	0.02117	0.0039	0.01058	18.82	3.431	326	450	T Seb	1.804	0.0056	0.0056	877	19	283.4	3.1	4	1134	60 963	171	Oke
As D-E	T	171.1	213.9	0.0282	0.02117	0.0039	0.01058	18.82	3.431	422	450	T Seb	3.018	0.0093	0.0093	1466	19	283.4	5.2	6	1700	91 445	247	Oke
Lt 1	L	102.2	127.7	0.0282	0.02117	0.0039	0.01058	18.82	3.431	326	450	T Seb	1.802	0.0056	0.0056	876	19	283.4	3.1	4	1134	60 963	171	Oke
As E-F	T	176.0	220.0	0.0282	0.02117	0.0039	0.01058	18.82	3.431	428	450	T Seb	3.105	0.0096	0.0096	1509	19	283.4	5.3	6	1700	91 445	247	Oke
Lt 1	L	100.3	125.4	0.0282	0.02117	0.0039	0.01058	18.82	3.431	323	450	T Seb	1.769	0.0055	0.0055	860	19	283.4	3.0	4	1134	60 963	171	Oke
As F-G	T	184.9	231.1	0.0282	0.02117	0.0039	0.01058	18.82	3.431	439	450	T Seb	3.261	0.0101	0.0101	1584	19	283.4	5.6	6	1700	91 445	247	Oke
Lt 1	L	120.1	150.1	0.0282	0.02117	0.0039	0.01058	18.82	3.431	354	450	T Seb	2.117	0.0065	0.0065	1029	19	283.4	3.6	4	1134	60 963	171	Oke
As A-B	T	179.0	223.8	0.0282	0.02117	0.0039	0.01058	18.82	3.431	432	450	T Seb	3.157	0.0097	0.0097	1534	19	283.4	5.4	6	1700	91 445	247	Oke
Lt 2	L	116.3	145.3	0.0282	0.02117	0.0039	0.01058	18.82	3.431	348	450	T Seb	2.05	0.0063	0.0063	996	19	283.4	3.5	4	1134	60 963	171	Oke
As B-C	T	171.9	214.9	0.0282	0.02117	0.0039	0.01058	18.82	3.431	423	450	T Seb	3.032	0.0094	0.0094	1473	19	283.4	5.2	6	1700	91 445	247	Oke
Lt 2	L	102.2	127.7	0.0282	0.02117	0.0039	0.01058	18.82	3.431	326	450	T Seb	1.802	0.0056	0.0056	876	19	283.4	3.1	4	1134	60 963	171	Oke
As C-D	T	171.3	214.2	0.0282	0.02117	0.0039	0.01058	18.82	3.431	422	450	T Seb	3.022	0.0093	0.0093	1468	19	283.4	5.2	6	1700	91 445	247	Oke
Lt 2	L	102.1	127.7	0.0282	0.02117	0.0039	0.01058	18.82	3.431	326	450	T Seb	1.801	0.0056	0.0056	875	19	283.4	3.1	4	1134	60 963	171	Oke
As D-E	T	171.5	214.4	0.0282	0.02117	0.0039	0.01058	18.82	3.431	423	450	T Seb	3.025	0.0093	0.0093	1470	19	283.4	5.2	6	1700	91 445	247	Oke
Lt 2	L	102.5	128.2	0.0282	0.02117	0.0039	0.01058	18.82	3.431	327	450	T Seb	1.808	0.0056	0.0056	879	19	283.4	3.1	4	1134	60 963	171	Oke
As E-F	T	171.7	214.6	0.0282	0.02117	0.0039	0.01058	18.82	3.431	423	450	T Seb	3.028	0.0093	0.0093	1471	19	283.4	5.2	6	1700	91 445	247	Oke
Lt 2	L	102.1	127.6	0.0282	0.02117	0.0039	0.01058	18.82	3.431	326	450	T Seb	1.8	0.0056	0.0056	875	19	283.4	3.1	4	1134	60 963	171	Oke
As F-G	T	179.3	224.1	0.0282	0.02117	0.0039	0.01058	18.82	3.431	432	450	T Seb	3.162	0.0098	0.0098	1536	19	283.4	5.4	6	1700	91 445	247	Oke
Lt 2	L	116.3	145.4	0.0282	0.02117	0.0039	0.01058	18.82	3.431	348	450	T Seb	2.051	0.0063	0.0063	997	19	283.4	3.5	4	1134	60 963	171	Oke
As A-B	T	185.1	231.4	0.0282	0.02117	0.0039	0.01058	18.82	3.431	439	450	T Seb	3.265	0.0101	0.0101	1586	19	283.4	5.6	6	1700	91 445	247	Oke
Lt 3	L	126.1	157.6	0.0282	0.02117	0.0039	0.01058	18.82	3.431	362	450	T Seb	2.224	0.0069	0.0069	1081	19	283.4	3.8	4	1134	60 963	171	Oke
As B-C	T	171.8	214.8	0.0282	0.02117	0.0039	0.01058	18.82	3.431	423	450	T Seb	3.03	0.0093	0.0093	1472	19	283.4	5.2	6	1700	91 445	247	Oke
Lt 3	L	102.4	128.0	0.0282	0.02117	0.0039	0.01058	18.82	3.431	327	450	T Seb	1.806	0.0056	0.0056	878	19	283.4	3.1	4	1134	60 963	171	Oke
As C-D	T	171.5	214.4	0.0282	0.02117	0.0039	0.01058	18.82	3.431	423	450	T Seb	3.025	0.0093	0.0093	1470	19	283.4	5.2	6	1700	91 445	247	Oke
Lt 3	L	102.5	128.2	0.0282	0.02117	0.0039	0.01058	18.82	3.431	327	450	T Seb	1.808	0.0056	0.0056	879	19	283.4	3.1	4	1134	60 963	171	Oke
As D-E	T	176.8	221.0	0.0282	0.02117	0.0039	0.01058	18.82	3.431	429	450	T Seb	3.119	0.0096	0.0096	1515	19	283.4	5.3	6	1700	91 445	247	Oke
Lt 3	L	100.1	125.2	0.0282	0.02117	0.0039	0.01058	18.82	3.431	323	450	T Seb	1.766	0.0054	0.0054	858	19	283.4	3.0	4	1134	60 963	171	Oke
As E-F	T	176.8	221.0	0.0282	0.02117	0.0039	0.01058	18.82	3.431	429	450	T Seb	3.119	0.0096	0.0096	1515	19	283.4	5.3	6	1700	91 445	247	Oke
Lt 3	L	100.3	125.4	0.0282	0.02117	0.0039	0.01058	18.82	3.431	323	450	T Seb	1.769	0.0055	0.0055	860	19	283.4	3.0	4	1134	60 963	171	Oke
As F-G	T	185.5	231.9	0.0282	0.02117	0.0039	0.01058	18.82	3.431	439	450	T Seb	3.272	0.0101	0.0101	1590	19	283.4	5.6	6	1700	91 445	247	Oke
Lt 3	L	126.2	157.8	0.0282	0.02117	0.0039	0.01058	18.82	3.431	362	450	T Seb	2.226	0.0069	0.0069	1082	19	283.4	3.8	4	1134	60 963	171	Oke

Tulangan Rangkap Portal Arah Y

Lampiran 23

Balok	8 ; As F-G	8 ; As A-B	8 ; As F-G	10 ; As A-B	10 ; As D-E	10 ; As F-G	11 ; As A-B	11 ; As B-C
Data	Lt 1	Lt 3	Lt 3	Lt 1	Lt 3	Lt 3	Lt 1	Lt 1
Mu (KN-M)	194.9	198.7	195.1	195.3	197.6	195.1	213.2	201.4
Mu/Φ (KN-M)	243.625	248.375	243.875	244.125	247.000	243.875	266.500	251.750
f'c (Mpa)	22.5	22.5	22.5	22.5	22.5	22.5	22.5	22.5
fy (Mpa)	360	360	360	360	360	360	360	360
β1	0.85	0.85	0.85	0.85	0.85	0.85	0.85	0.85
b ada (mm)	350	350	350	350	350	350	350	350
h ada (mm)	550	550	550	550	550	550	550	550
d ada (mm)	450	450	450	450	450	450	450	450
d' (mm)	100	100	100	100	100	100	100	100
ρb	0.0282	0.0282	0.0282	0.0282	0.0282	0.0282	0.0282	0.0282
ρmax	0.0212	0.0212	0.0212	0.0212	0.0212	0.0212	0.0212	0.0212
ρ pakai	0.0106	0.0106	0.0106	0.0106	0.0106	0.0106	0.0106	0.0106
m	18.824	18.824	18.824	18.824	18.824	18.824	18.824	18.824
Rn	3.431	3.431	3.431	3.431	3.431	3.431	3.431	3.431
d perlu (mm)	450.449	454.819	450.680	450.911	453.558	450.680	471.122	457.899
	Tul Rgkp	Tul Rgkp	Tul Rgkp	Tul Rgkp	Tul Rgkp	Tul Rgkp	Tul Rgkp	Tul Rgkp
As1 (mm2)	1666.901	1666.901	1666.901	1666.901	1666.901	1666.901	1666.901	1666.901
a (mm)	89.648	89.648	89.648	89.648	89.648	89.648	89.648	89.648
Mn1 (KN-M)	243.592	243.592	243.592	243.592	243.592	243.592	243.592	243.592
	Tul.Desak	Tul.Desak	Tul.Desak	Tul.Desak	Tul.Desak	Tul.Desak	Tul.Desak	Tul.Desak
Mn2 (KN-M)	0.033	4.783	0.283	0.533	3.408	0.283	22.908	8.158
fs' (Mpa)	258.667	258.667	258.667	258.667	258.667	258.667	258.667	258.667
fs' pakai	258.667	258.667	258.667	258.667	258.667	258.667	258.667	258.667
As' (mm2)	0.368	52.835	3.129	5.891	37.647	3.129	253.037	90.114
Ø tul (mm)	19	19	19	19	19	19	19	19
A1Ø (mm2)	283.529	283.529	283.529	283.529	283.529	283.529	283.529	283.529
n	0.001	0.186	0.011	0.021	0.133	0.011	0.892	0.318
n ada	2	2	2	2	2	2	2	2
As' ada (mm2	567.057	567.057	567.057	567.057	567.057	567.057	567.057	567.057
	Tul.Tarik	Tul.Tarik	Tul.Tarik	Tul.Tarik	Tul.Tarik	Tul.Tarik	Tul.Tarik	Tul.Tarik
As (mm2)	2233.958	2233.958	2233.958	2233.958	2233.958	2233.958	2233.958	2233.958
n	7.879	7.879	7.879	7.879	7.879	7.879	7.879	7.879
n ada	8	8	8	8	8	8	8	8
As ada (mm2	2268.230	2268.230	2268.230	2268.230	2268.230	2268.230	2268.230	2268.230
ρ	0.014	0.014	0.014	0.014	0.014	0.014	0.014	0.014
ρ'	0.004	0.004	0.004	0.004	0.004	0.004	0.004	0.004
ρ - ρ'	0.011	0.011	0.011	0.011	0.011	0.011	0.011	0.011
fs'	42.572	42.572	42.572	42.572	42.572	42.572	42.572	42.572
a (mm)	118.382	118.382	118.382	118.382	118.382	118.382	118.382	118.382
Mn (KN-M)	318.135	318.135	318.135	318.135	318.135	318.135	318.135	318.135
	OK... !	OK... !	OK... !	OK... !	OK... !	OK... !	OK... !	OK... !

Tulangan Rangkap Portal Arah Y

Balok	11 ; As C-D	11 ; As D-E	11 ; As E-F	11 ; As F-G	11 ; As A-B	11 ; As B-C	11 ; As C-D	11 ; As D-E
Data	**Lt 1**	**Lt 1**	**Lt 1**	**Lt 1**	**Lt 2**	**Lt 2**	**Lt 2**	**Lt 2**
Mu (KN-M)	197.4	196.3	203	213.7	210.4	201.5	200.3	196.6
Mu/Φ (KN-M)	246.750	245.375	253.750	267.125	263.000	251.875	250.375	245.750
f'c (Mpa)	22.5	22.5	22.5	22.5	22.5	22.5	22.5	22.5
fy (Mpa)	360	360	360	360	360	360	360	360
β1	0.85	0.85	0.85	0.85	0.85	0.85	0.85	0.85
b ada (mm)	350	350	350	350	350	350	350	350
h ada (mm)	550	550	550	550	550	550	550	550
d ada (mm)	450	450	450	450	450	450	450	450
d' (mm)	100	100	100	100	100	100	100	100
ρb	0.0282	0.0282	0.0282	0.0282	0.0282	0.0282	0.0282	0.0282
ρmax	0.0212	0.0212	0.0212	0.0212	0.0212	0.0212	0.0212	0.0212
ρ pakai	0.0106	0.0106	0.0106	0.0106	0.0106	0.0106	0.0106	0.0106
m	18.824	18.824	18.824	18.824	18.824	18.824	18.824	18.824
Rn	3.431	3.431	3.431	3.431	3.431	3.431	3.431	3.431
d perlu (mm)	453.329	452.064	459.714	471.674	468.018	458.012	456.647	452.409
	Tul Rgkp	**Tul Rgkp**	**Tul Rgkp**	**Tul Rgkp**	**Tul Rgkp**	**Tul Rgkp**	**Tul Rgkp**	**Tul Rgkp**
As1 (mm2)	1666.901	1666.901	1666.901	1666.901	1666.901	1666.901	1666.901	1666.901
a (mm)	89.648	89.648	89.648	89.648	89.648	89.648	89.648	89.648
Mn1 (KN-M)	243.592	243.592	243.592	243.592	243.592	243.592	243.592	243.592
	Tul.Desak	**Tul.Desak**	**Tul.Desak**	**Tul.Desak**	**Tul.Desak**	**Tul.Desak**	**Tul.Desak**	**Tul.Desak**
Mn2 (KN-M)	3.158	1.783	10.158	23.533	19.408	8.283	6.783	2.158
fs' (Mpa)	258.667	258.667	258.667	258.667	258.667	258.667	258.667	258.667
fs' pakai	258.667	258.667	258.667	258.667	258.667	258.667	258.667	258.667
As' (mm2)	34.886	19.698	112.205	259.941	214.378	91.495	74.926	23.840
Ø tul (mm)	**19**	**19**	**19**	**19**	**19**	**19**	**19**	**19**
A1Ø (mm2)	283.529	283.529	283.529	283.529	283.529	283.529	283.529	283.529
n	0.123	0.069	0.396	0.917	0.756	0.323	0.264	0.084
n ada	**2**	**2**	**2**	**2**	**2**	**2**	**2**	**2**
As' ada (mm2	567.057	567.057	567.057	567.057	567.057	567.057	567.057	567.057
	Tul.Tarik	**Tul.Tarik**	**Tul.Tarik**	**Tul.Tarik**	**Tul.Tarik**	**Tul.Tarik**	**Tul.Tarik**	**Tul.Tarik**
As (mm2)	2233.958	2233.958	2233.958	2233.958	2233.958	2233.958	2233.958	2233.958
n	7.879	7.879	7.879	7.879	7.879	7.879	7.879	7.879
n ada	**8**	**8**	**8**	**8**	**8**	**8**	**8**	**8**
As ada (mm2	2268.230	2268.230	2268.230	2268.230	2268.230	2268.230	2268.230	2268.230
ρ	0.014	0.014	0.014	0.014	0.014	0.014	0.014	0.014
ρ'	0.004	0.004	0.004	0.004	0.004	0.004	0.004	0.004
ρ - ρ'	0.011	0.011	0.011	0.011	0.011	0.011	0.011	0.011
fs'	42.572	42.572	42.572	42.572	42.572	42.572	42.572	42.572
a (mm)	118.382	118.382	118.382	118.382	118.382	118.382	118.382	118.382
Mn (KN-M)	318.135	318.135	318.135	318.135	318.135	318.135	318.135	318.135
	OK... !	**OK... !**	**OK... !**	**OK... !**	**OK... !**	**OK... !**	**OK... !**	**OK... !**

Tulangan Rangkap Portal Arah Y

Balok	11 ; As E-F	11 ; As F-G	11 ; As A-B	11 ; As B-C	11 ; As C-D	11 ; As D-E	11 ; As E-F	11 ; As F-G	9 ; As F-G
Data	Lt 2	Lt 2	Lt 3	Lt 3	Lt 3	Lt 3	Lt 3	Lt 3	Lt 3
Mu (KN-M)	196.5	206.7	203	217.5	207.6	203	200.3	213.9	194.8
Mu/Φ (KN-M)	245.625	258.375	253.750	271.875	259.500	253.750	250.375	267.375	243.500
f'c (Mpa)	22.5	22.5	22.5	22.5	22.5	22.5	22.5	22.5	22.5
fy (Mpa)	360	360	360	360	360	360	360	360	360
β1	0.85	0.85	0.85	0.85	0.85	0.85	0.85	0.85	0.85
b ada (mm)	350	350	350	350	350	350	350	350	350
h ada (mm)	550	550	550	550	550	550	550	550	550
d ada (mm)	450	450	450	450	450	450	450	450	450
d' (mm)	100	100	100	100	100	100	100	100	100
ρb	0.0282	0.0282	0.0282	0.0282	0.0282	0.0282	0.0282	0.0282	0.0282
ρmax	0.0212	0.0212	0.0212	0.0212	0.0212	0.0212	0.0212	0.0212	0.0212
ρ pakai	0.0106	0.0106	0.0106	0.0106	0.0106	0.0106	0.0106	0.0106	0.0106
m	18.824	18.824	18.824	18.824	18.824	18.824	18.824	18.824	18.824
Rn	3.431	3.431	3.431	3.431	3.431	3.431	3.431	3.431	3.431
d perlu (mm)	452.294	463.885	459.714	475.849	464.893	459.714	456.647	471.895	450.333
	Tul Rgkp	Tul Rgkp	Tul Rgkp	Tul Rgkp	Tul Rgkp	Tul Rgkp	Tul Rgkp	Tul Rgkp	Tul Rgkp
As1 (mm2)	1666.901	1666.901	1666.901	1666.901	1666.901	1666.901	1666.901	1666.901	1666.901
a (mm)	89.648	89.648	89.648	89.648	89.648	89.648	89.648	89.648	89.648
Mn1 (KN-M)	243.592	243.592	243.592	243.592	243.592	243.592	243.592	243.592	243.592
	Tul.Desak	Tul.Desak	Tul.Desak	Tul.Desak	Tul.Desak	Tul.Desak	Tul.Desak	Tul.Desak	Tul.Desak
Mn2 (KN-M)	2.033	14.783	10.158	28.283	15.908	10.158	6.783	23.783	-0.092
fs' (Mpa)	258.667	258.667	258.667	258.667	258.667	258.667	258.667	258.667	258.667
fs' pakai	258.667	258.667	258.667	258.667	258.667	258.667	258.667	258.667	258.667
As' (mm2)	22.459	163.291	112.205	312.408	175.718	112.205	74.926	262.702	-1.013
Ø tul (mm)	19	19	19	19	19	19	19	19	19
A1Ø (mm2)	283.529	283.529	283.529	283.529	283.529	283.529	283.529	283.529	283.529
n	0.079	0.576	0.396	1.102	0.620	0.396	0.264	0.927	-0.004
n ada	2	2	2	2	2	2	2	2	2
As' ada (mm2	567.057	567.057	567.057	567.057	567.057	567.057	567.057	567.057	567.057
	Tul.Tarik	Tul.Tarik	Tul.Tarik	Tul.Tarik	Tul.Tarik	Tul.Tarik	Tul.Tarik	Tul.Tarik	Tul.Tarik
As (mm2)	2233.958	2233.958	2233.958	2233.958	2233.958	2233.958	2233.958	2233.958	2233.958
n	7.879	7.879	7.879	7.879	7.879	7.879	7.879	7.879	7.879
n ada	8	8	8	8	8	8	8	8	8
As ada (mm2	2268.230	2268.230	2268.230	2268.230	2268.230	2268.230	2268.230	2268.230	2268.230
ρ	0.014	0.014	0.014	0.014	0.014	0.014	0.014	0.014	0.014
ρ'	0.004	0.004	0.004	0.004	0.004	0.004	0.004	0.004	0.004
ρ - ρ'	0.011	0.011	0.011	0.011	0.011	0.011	0.011	0.011	0.011
fs'	42.572	42.572	42.572	42.572	42.572	42.572	42.572	42.572	42.572
a (mm)	118.382	118.382	118.382	118.382	118.382	118.382	118.382	118.382	118.382
Mn (KN-M)	318.135	318.135	318.135	318.135	318.135	318.135	318.135	318.135	318.135
	OK... !	OK... !	OK... !	OK... !	OK... !	OK... !	OK... !	OK... !	OK... !

TABEL TULANGAN GESER BALOK INDUK

PORTAL ARAH X ; Y= 0 M (PORTAL A)

Balok	Ln	b	h	d	Mnak,b	Mnak,b'	VD	VL	H1	1,05.Vg	Vu,b	Vu,bpakai	Ø Tul	Di daerah sendi plastis			Di luar sendi plastis				
														Vs	s	Tul	Vu,b	Vc	Vs	s	Tul
	(m)	(mm)	(mm)	(mm)	(KNm)	(KNm)	(KN)	(KN)			(KN)	(KN)	(mm)	(KN)	(mm)	Geser	(KN)	(KN)	(KN)	mm	Geser
As 7-8 Lt 1	5	300	400	340	82.64	41.34	53.31	7.1	21.70	63.43	85.13	82.1757	10	136.96	85	**P10 - 80**	78.18368	80.64	49.66806	170	**P10 - 170**
As 8-9 Lt 1	5	300	400	340	82.64	41.34	51.1	6.75	21.70	60.74	82.44	79.4877	10	132.48	85	**P10 - 80**	75.49568	80.64	45.18806	170	**P10 - 170**
As 9-10 Lt 1	5	300	400	340	82.64	41.34	50.61	6.63	21.70	60.10	81.80	78.8472	10	131.41	85	**P10 - 80**	74.85518	80.64	44.12056	170	**P10 - 170**
As10-11 Lt 1	5	300	400	340	82.64	41.34	50.96	6.67	21.70	60.51	82.21	79.2567	10	132.09	85	**P10 - 80**	75.26468	80.64	44.80306	170	**P10 - 170**
As 11-12 Lt 1	5	300	400	340	82.64	41.34	50.64	6.67	21.70	60.18	81.87	78.9207	10	131.53	85	**P10 - 80**	74.92868	80.64	44.24306	170	**P10 - 170**
As 7-8 Lt 2	5	300	400	340	82.64	41.34	50.36	6.44	21.70	59.64	81.34	78.3852	10	130.64	85	**P10 - 80**	74.39318	80.64	43.35056	170	**P10 - 170**
As 8-9 Lt 2	5	300	400	340	33.78	57.13	52.59	6.44	15.91	61.98	77.89	75.7271	10	126.21	85	**P10 - 80**	72.79976	80.64	40.69485	170	**P10 - 170**
As 9-10 Lt 2	5	300	400	340	82.64	41.34	50.57	7.4	21.70	60.87	82.56	79.6137	10	132.69	85	**P10 - 80**	75.62168	80.64	45.39806	170	**P10 - 170**
As10-11 Lt 2	5	300	400	340	33.78	57.13	51.34	6.65	15.91	60.89	76.80	74.6351	10	124.39	85	**P10 - 80**	71.70776	80.64	38.87485	170	**P10 - 170**
As 11-12 Lt 2	5	300	400	340	33.78	57.13	50.6	6.67	15.91	60.13	76.04	73.8791	10	123.13	85	**P10 - 80**	70.95176	80.64	37.61485	170	**P10 - 170**
As 7-8 Lt 3	5	300	400	340	33.78	57.13	51.54	7.07	15.91	61.54	77.45	75.2861	10	125.48	85	**P10 - 80**	72.35876	80.64	39.95985	170	**P10 - 170**
As 8-9 Lt 3	5	300	400	340	33.78	57.13	51.34	6.65	15.91	60.89	76.80	74.6351	10	124.39	85	**P10 - 80**	71.70776	80.64	38.87485	170	**P10 - 170**
As 9-10 Lt 3	5	300	400	340	33.78	57.13	50.6	6.67	15.91	60.13	76.04	73.8791	10	123.13	85	**P10 - 80**	70.95176	80.64	37.61485	170	**P10 - 170**
As10-11 Lt 3	5	300	400	340	33.78	57.13	51.54	7.07	15.91	61.54	77.45	75.2861	10	125.48	85	**P10 - 80**	72.35876	80.64	39.95985	170	**P10 - 170**
As 11-12 Lt 3	5	300	400	340	33.78	57.13	50.6	7.29	15.91	60.78	76.69	74.5301	10	124.22	85	**P10 - 80**	71.60276	80.64	38.69985	170	**P10 - 170**

PORTAL ARAH X ; Y= 6 M (PORTAL B)

Balok	Ln	b	h	d	Mnak,b	Mnak,b'	VD	VL	H1	1,05.Vg	Vu,b	Vu,bpakai	Ø Tul	Di daerah sendi plastis			Di luar sendi plastis				
														Vs	s	Tul	Vu,b	Vc	Vs	s	Tul
	(m)	(mm)	(mm)	(mm)	(KNm)	(KNm)	(KN)	(KN)			(KN)	(KN)	(mm)	(KN)	(mm)	Geser	(KN)	(KN)	(KN)	mm	Geser
As 7-8 Lt 1	5	300	400	340	33.78	57.13	45.44	12.11	15.91	60.43	76.34	74.1731	10	123.62	85	**P10 - 80**	71.24576	80.64	38.10485	170	**P10 - 170**
As 8-9 Lt 1	5	300	400	340	82.64	41.34	44.23	13.88	21.70	61.02	82.71	79.7607	10	132.93	85	**P10 - 80**	75.76868	80.64	45.64306	170	**P10 - 170**
As 9-10 Lt 1	5	300	400	340	82.64	41.34	43.06	13.21	21.70	59.08	80.78	77.8287	10	129.71	85	**P10 - 80**	73.83668	80.64	42.42306	170	**P10 - 170**
As10-11 Lt 1	5	300	400	340	82.64	41.34	44.05	14.02	21.70	60.97	82.67	79.7187	10	132.86	85	**P10 - 80**	75.72668	80.64	45.57306	170	**P10 - 170**
As 11-12 Lt 1	5	300	400	340	82.64	41.34	45.68	12.15	21.70	60.72	82.42	79.4667	10	132.44	85	**P10 - 80**	75.47468	80.64	45.15306	170	**P10 - 170**
As 7-8 Lt 2	5	300	400	340	33.78	57.13	44.22	13.49	15.91	60.60	76.50	74.3411	10	123.90	85	**P10 - 80**	71.41376	80.64	38.38485	170	**P10 - 170**
As 8-9 Lt 2	5	300	400	340	33.78	57.13	47.94	13.44	15.91	64.45	80.36	78.1946	10	130.32	85	**P10 - 80**	75.26726	80.64	44.80735	170	**P10 - 170**
As10-11 Lt 2	5	300	400	340	33.78	57.13	48.28	13.32	15.91	64.08	80.59	78.4256	10	130.71	85	**P10 - 80**	75.49826	80.64	45.19235	170	**P10 - 170**
As 11-12 Lt 2	5	300	400	340	82.64	41.34	43.83	13.42	21.70	60.11	81.81	78.8577	10	131.43	85	**P10 - 80**	74.86568	80.64	44.13806	170	**P10 - 170**
As 7-8 Lt 3	5	300	400	340	82.64	41.34	44.86	14.43	21.70	62.25	83.95	80.9997	10	135.00	85	**P10 - 80**	77.00768	80.64	47.70806	170	**P10 - 170**
As 9-10 Lt 3	5	300	400	340	33.78	57.13	36.5	11.7	15.91	50.61	66.52	64.3556	10	107.26	85	**P10 - 80**	61.42826	80.64	21.74235	170	**P10 - 170**
As10-11 Lt 3	5	300	400	340	33.78	57.13	51.28	14.45	15.91	69.02	84.93	82.7621	10	137.94	85	**P10 - 80**	79.83476	80.64	52.41985	170	**P10 - 170**
As 11-12 Lt 3	5	300	400	340	33.78	57.13	43.06	12.35	15.91	58.18	74.09	71.9261	10	119.88	85	**P10 - 80**	68.99876	80.64	34.35985	170	**P10 - 170**

TABEL TULANGAN GESER BALOK INDUK

PORTAL ARAH X ; Y= 12 M (PORTAL C)

Balok	Ln	b	h	d	Mnak,b	Mnak,b'	VD	VL	H1	1,05 Vg	Vu,b	Vu,bpakai	Ø Tul	Di daerah sendi plastis			Di luar sendi plastis				
	(m)	(mm)	(mm)	(mm)	(KNm)	(KNm)	(KN)	(KN)			(KN)	(KN)	(mm)	Vs (KN)	s (mm)	Tul Geser	Vu,b (KN)	Vc (KN)	Vs (KN)	s mm	Tul Geser
As 7-8 Lt 1	5	300	400	340	33.78	57.13	45.5	14.16	15.91	62.84	78.55	76.3886	10	127.31	85	**P10 - 80**	73.46126	80.64	41.79735	170	**P10 - 170**
As 8-9 Lt 1	5	300	400	340	33.78	57.13	44.25	13.88	15.91	61.04	76.95	74.7821	10	124.64	85	**P10 - 80**	71.85476	80.64	39.11985	170	**P10 - 170**
As 9-10 Lt 1	5	300	400	340	82.64	41.34	43.07	13.2[illegible]	21.70	59.09	80.79	77.8392	10	129.73	85	**P10 - 80**	73.84718	80.64	42.44056	170	**P10 - 170**
As10-11 Lt 1	5	300	400	340	82.64	41.34	44.06	14	21.70	60.96	82.66	79.7082	10	132.85	85	**P10 - 80**	75.71618	80.64	45.55556	170	**P10 - 170**
As 11-12 Lt 1	5	300	400	340	82.64	41.34	53.11	14.29	21.70	70.77	92.47	89.5152	10	149.19	85	**P10 - 80**	85.52318	80.64	61.90056	170	**P10 - 170**
As 7-8 Lt 2	5	300	400	340	33.78	57.13	44.12	13.52	15.91	60.52	76.43	74.2676	10	123.78	85	**P10 - 80**	71.34026	80.64	38.26235	170	**P10 - 170**
As 8-9 Lt 2	5	300	400	340	33.78	57.13	47.87	13.42	15.91	64.35	80.26	78.1001	10	130.17	85	**P10 - 80**	75.17276	80.64	44.64985	170	**P10 - 170**
As10-11 Lt 2	5	300	400	340	82.64	41.34	48.23	12.91	21.70	64.20	85.89	82.9422	10	138.24	85	**P10 - 80**	78.95018	80.64	50.94556	170	**P10 - 170**
As 11-12 Lt 2	5	300	400	340	82.64	41.34	43.77	13.43	21.70	60.06	81.76	78.8052	10	131.34	85	**P10 - 80**	74.81318	80.64	44.05056	170	**P10 - 170**
As 7-8 Lt 3	5	300	400	340	33.78	57.13	44.78	14.49	15.91	62.23	78.14	75.9791	10	126.63	85	**P10 - 80**	73.05176	80.64	41.11485	170	**P10 - 170**
As 9-10 Lt 3	5	300	400	340	82.64	41.34	50.91	14.57	21.70	68.75	90.45	87.4992	10	145.83	85	**P10 - 80**	83.50718	80.64	58.54056	170	**P10 - 170**
As10-11 Lt 3	5	300	400	340	82.64	41.34	51.26	14.45	21.70	69.00	90.69	87.7407	10	146.23	85	**P10 - 80**	83.74868	80.64	58.94306	170	**P10 - 170**
As 11-12 Lt 3	5	300	400	340	33.78	57.13	44.5	14.39	15.91	61.83	77.74	75.5801	10	125.97	85	**P10 - 80**	72.65276	80.64	40.44985	170	**P10 - 170**

PORTAL ARAH X ; Y= 18 M (PORTAL D)

Balok	Ln	b	h	d	Mnak,b	Mnak,b'	VD	VL	H1	1,05.Vg	Vu,b	Vu,bpakai	Ø Tul	Di daerah sendi plastis			Di luar sendi plastis				
	(m)	(mm)	(mm)	(mm)	(KNm)	(KNm)	(KN)	(KN)			(KN)	(KN)	(mm)	Vs (KN)	s (mm)	Tul Geser	Vu,b (KN)	Vc (KN)	Vs (KN)	s mm	Tul Geser
As 7-8 Lt 1	5	300	400	340	122.42	188.17	46.47	14.08	54.35	63.58	117.93	110.539	10	184.23	69.5741	**P10 - 60**	100.5376	80.64	86.92463	147.458	**P10 - 140**
As 8-9 Lt 1	5	300	400	340	81.61	147.36	43.52	13.29	40.07	59.65	99.72	94.2714	10	157.12	81.5795	**P10 - 80**	86.89846	80.64	64.19268	170	**P10 - 170**
As 9-10 Lt 1	5	300	400	340	81.61	147.36	43.08	13.32	40.07	59.22	99.29	93.8409	10	156.40	81.9538	**P10 - 80**	86.46796	80.64	63.47518	170	**P10 - 170**
As10-11 Lt 1	5	300	400	340	81.61	147.36	43.31	13.4	40.07	59.55	99.62	94.1664	10	156.94	81.6705	**P10 - 80**	86.79346	80.64	64.01768	170	**P10 - 170**
As 11-12 Lt 1	5	300	400	340	81.61	115.39	46.68	14.03	34.48	63.75	98.22	93.5333	10	155.89	82.2233	**P10 - 80**	87.18958	80.64	64.67789	170	**P10 - 170**
As 7-8 Lt 2	5	300	400	340	81.61	147.36	45.36	13.46	40.07	61.76	101.83	96.3819	10	160.64	79.7932	**P10 - 70**	89.00896	80.64	67.71018	170	**P10 - 170**
As 8-9 Lt 2	5	300	400	340	81.61	115.39	48.57	13.3	34.48	64.96	99.44	94.7513	10	157.92	81.1664	**P10 - 80**	88.40758	80.64	66.70789	170	**P10 - 170**
As 9-10 Lt 2	5	300	400	340	81.61	147.36	43.13	13.28	40.07	59.23	99.30	93.8514	10	156.42	81.9446	**P10 - 80**	86.47846	80.64	63.49268	170	**P10 - 170**
As10-11 Lt 2	5	300	400	340	81.61	115.39	43.24	13.48	34.48	59.56	94.03	89.3438	10	148.91	85	**P10 - 80**	83.00008	80.64	57.69539	170	**P10 - 170**
As 11-12 Lt 2	5	300	400	340	81.61	115.39	45.71	13.38	34.48	62.04	96.52	91.8323	10	153.05	83.7464	**P10 - 80**	85.48858	80.64	61.84289	170	**P10 - 170**
As 7-8 Lt 3	5	300	400	340	81.61	115.39	43.75	14.53	34.48	61.19	95.67	90.9818	10	151.64	84.5292	**P10 - 80**	84.63808	80.64	60.42539	170	**P10 - 170**
As 8-9 Lt 3	5	300	400	340	81.61	115.39	43.62	13.13	34.48	59.59	94.06	89.3753	10	148.96	85	**P10 - 80**	83.03158	80.64	57.74789	170	**P10 - 170**
As 9-10 Lt 3	5	300	400	340	81.61	115.39	43.07	13.3	34.48	59.19	93.67	88.9763	10	148.29	85	**P10 - 80**	82.63258	80.64	57.08289	170	**P10 - 170**
As10-11 Lt 3	5	300	400	340	81.61	115.39	43.94	13.31	34.48	60.11	94.59	89.9003	10	149.83	85	**P10 - 80**	83.55658	80.64	58.62289	170	**P10 - 170**
As 11-12 Lt 3	5	300	400	340	81.61	115.39	44.04	14.43	34.48	61.39	95.87	91.1813	10	151.97	84.3443	**P10 - 80**	84.83758	80.64	60.75789	170	**P10 - 170**

PORTAL ARAH X ; Y= 24 M (PORTAL E)

Balok	Ln	b	h	d	Mnak,b	Mnak,b'	VD	VL	H1	1,05.Vg	Vu,b	Vu,bpakai	Ø Tul	Di daerah sendi plastis			Di luar sendi plastis				
	(m)	(mm)	(mm)	(mm)	(KNm)	(KNm)	(KN)	(KN)			(KN)	(KN)	(mm)	Vs (KN)	s (mm)	Tul Geser	Vu,b (KN)	Vc (KN)	Vs (KN)	s mm	Tul Geser
As 7-8 Lt 1	5	300	400	340	65.74	122.42	46.58	14.11	32.93	63.72	96.65	92.1753	10	153.63	83.4347	**P10 - 80**	86.11637	80.64	62.8892	170	**P10 - 170**
As 8-9 Lt 1	5	300	400	340	65.74	81.61	43.03	13.1	25.79	58.94	84.72	81.2173	10	135.36	85	**P10 - 80**	76.47229	80.64	46.81573	170	**P10 - 170**
As 9-10 Lt 1	5	300	400	340	65.74	81.61	43.07	13.23	25.79	59.12	84.90	81.3958	10	135.66	85	**P10 - 80**	76.65079	80.64	47.11323	170	**P10 - 170**
As10-11 Lt 1	5	300	400	340	33.78	81.61	43.23	13.21	20.19	59.26	79.46	76.7096	10	127.85	85	**P10 - 80**	72.99391	80.64	41.01844	170	**P10 - 170**
As 11-12 Lt 1	5	300	400	340	65.74	81.61	46.86	14.06	25.79	63.97	89.75	86.2468	10	143.74	85	**P10 - 80**	81.50179	80.64	55.19823	170	**P10 - 170**
As 7-8 Lt 2	5	300	400	340	33.78	81.61	45.48	13.46	20.19	61.89	82.08	79.3346	10	132.22	85	**P10 - 80**	75.61891	80.64	45.39344	170	**P10 - 170**
As 8-9 Lt 2	5	300	400	340	33.78	81.61	43.62	13.3	20.19	59.77	79.96	77.2136	10	128.69	85	**P10 - 80**	73.49791	80.64	41.85844	170	**P10 - 170**
As 9-10 Lt 2	5	300	400	340	33.78	81.61	43.12	13.45	20.19	59.40	79.59	76.8461	10	128.08	85	**P10 - 80**	73.13041	80.64	41.24594	170	**P10 - 170**
As10-11 Lt 2	5	300	400	340	33.78	81.61	43.31	13.48	20.19	59.63	79.82	77.0771	10	128.46	85	**P10 - 80**	73.36141	80.64	41.63094	170	**P10 - 170**
As 11-12 Lt 2	5	300	400	340	33.78	81.61	45.82	13.39	20.19	62.17	82.36	79.6181	10	132.70	85	**P10 - 80**	75.90241	80.64	45.86594	170	**P10 - 170**
As 7-8 Lt 3	5	300	400	340	33.78	81.61	43.96	14.53	20.19	61.41	81.61	78.8621	10	131.44	85	**P10 - 80**	75.14641	80.64	44.60594	170	**P10 - 170**
As 8-9 Lt 3	5	300	400	340	33.78	81.61	43.08	13.25	20.19	59.15	79.34	76.5941	10	127.66	85	**P10 - 80**	72.87841	80.64	40.82594	170	**P10 - 170**
As 9-10 Lt 3	5	300	400	340	33.78	81.61	43.07	12.95	20.19	58.82	79.01	76.2686	10	127.11	85	**P10 - 80**	72.55291	80.64	40.28344	170	**P10 - 170**
As10-11 Lt 3	5	300	400	340	33.78	81.61	43.4	12.78	20.19	58.99	79.18	76.4366	10	127.39	85	**P10 - 80**	72.72091	80.64	40.56344	170	**P10 - 170**
As 11-12 Lt 3	5	300	400	340	33.78	81.61	44.25	14.43	20.19	61.61	81.81	79.0616	10	131.77	85	**P10 - 80**	75.34591	80.64	44.93844	170	**P10 - 170**

PORTAL ARAH X ; Y= 30 M (PORTAL F)

Balok	Ln	b	h	d	Mnak,b	Mnak,b'	VD	VL	H1	1,05.Vg	Vu,b	Vu,bpakai	Ø Tul	Di daerah sendi plastis			Di luar sendi plastis				
	(m)	(mm)	(mm)	(mm)	(KNm)	(KNm)	(KN)	(KN)			(KN)	(KN)	(mm)	Vs (KN)	s (mm)	Tul Geser	Vu,b (KN)	Vc (KN)	Vs (KN)	s mm	Tul Geser
As 7-8 Lt 1	5	300	400	340	65.74	122.42	46.55	14.09	32.93	63.67	96.60	92.1228	10	153.54	83.4822	**P10 - 80**	86.06387	80.64	62.8017	170	**P10 - 170**
As 8-9 Lt 1	5	300	400	340	65.74	81.61	43.01	13.14	25.79	58.96	84.75	81.2383	10	135.40	85	**P10 - 80**	76.49329	80.64	46.85073	170	**P10 - 170**
As 9-10 Lt 1	5	300	400	340	65.74	81.61	43.07	13.23	25.79	59.12	84.90	81.3958	10	135.66	85	**P10 - 80**	76.65079	80.64	47.11323	170	**P10 - 170**
As10-11 Lt 1	5	300	400	340	65.74	81.61	43.2	13.23	25.79	59.25	85.04	81.5323	10	135.89	85	**P10 - 80**	76.78729	80.64	47.34073	170	**P10 - 170**
As 11-12 Lt 1	5	300	400	340	33.78	81.61	46.79	14.05	20.19	63.88	84.08	81.3296	10	135.55	85	**P10 - 80**	77.61391	80.64	48.71844	170	**P10 - 170**
As 7-8 Lt 2	5	300	400	340	65.74	81.61	45.43	13.43	25.79	61.80	87.59	84.0838	10	140.14	85	**P10 - 80**	79.33879	80.64	51.59323	170	**P10 - 170**
As 8-9 Lt 2	5	300	400	340	33.78	81.61	45.63	13.37	20.19	61.95	82.14	79.3976	10	132.33	85	**P10 - 80**	75.68191	80.64	45.49844	170	**P10 - 170**
As 9-10 Lt 2	5	300	400	340	33.78	81.61	43.11	13.28	20.19	59.21	79.40	76.6571	10	127.76	85	**P10 - 80**	72.94141	80.64	40.93094	170	**P10 - 170**
As10-11 Lt 2	5	300	400	340	33.78	81.61	43.33	13.51	20.19	59.68	79.88	77.1296	10	128.55	85	**P10 - 80**	73.41391	80.64	41.71844	170	**P10 - 170**
As 11-12 Lt 2	5	300	400	340	65.74	81.61	45.82	13.38	25.79	62.16	87.95	84.4408	10	140.73	85	**P10 - 80**	79.69579	80.64	52.18823	170	**P10 - 170**
As 7-8 Lt 3	5	300	400	340	33.78	81.61	43.87	14.49	20.19	61.28	81.47	78.7256	10	131.21	85	**P10 - 80**	75.00991	80.64	44.37844	170	**P10 - 170**
As 8-9 Lt 3	5	300	400	340	33.78	81.61	43.01	13.27	20.19	59.09	79.29	76.5416	10	127.57	85	**P10 - 80**	72.82591	80.64	40.73844	170	**P10 - 170**
As 9-10 Lt 3	5	300	400	340	33.78	81.61	43.08	13.29	20.19	59.19	79.38	76.6361	10	127.73	85	**P10 - 80**	72.92041	80.64	40.89594	170	**P10 - 170**
As10-11 Lt 3	5	300	400	340	33.78	81.61	43.32	13.49	20.19	59.65	79.84	77.0981	10	128.50	85	**P10 - 80**	73.38241	80.64	41.66594	170	**P10 - 170**
As 11-12 Lt 3	5	300	400	340	33.78	81.61	44.19	14.41	20.19	61.53	81.72	78.9776	10	131.63	85	**P10 - 80**	75.26191	80.64	44.79844	170	**P10 - 170**

PORTAL ARAH X ; Y= 36 M (PORTAL G)

Balok	Ln	b	h	d	Mnak,b	Mnak,b'	VD	VL	H1	1,05.Vg	Vu,b	Vu,bpakai	Ø Tul	Di daerah sendi plastis			Di luar sendi plastis				
														Vs	s	Tul	Vu,b	Vc	Vs	s	Tul
	(m)	(mm)	(mm)	(mm)	(KNm)	(KNm)	(KN)	(KN)			(KN)	(KN)	(mm)	(KN)	(mm)	Geser	(KN)	(KN)	(KN)	mm	Geser
As 7-8 Lt 1	5	300	400	340	33.78	81.61	53.42	14.06	20.19	70.85	91.05	88.3016	10	147.17	85	**P10 - 80**	84.58591	80.64	60.33844	170	**P10 - 170**
As 8-9 Lt 1	5	300	400	340	65.74	81.61	50.49	13.13	25.79	66.80	92.59	89.0818	10	148.47	85	**P10 - 80**	84.33679	80.64	59.92323	170	**P10 - 170**
As 9-10 Lt 1	5	300	400	340	65.74	81.61	50.61	13.2	25.79	67.[illegible]0	92.79	89.2813	10	148.80	85	**P10 - 80**	84.53629	80.64	60.25573	170	**P10 - 170**
As10-11 Lt 1	5	300	400	340	65.74	81.61	50.65	13.14	25.79	66.98	92.77	89.2603	10	148.77	85	**P10 - 80**	84.51529	80.64	60.22073	170	**P10 - 170**
As 11-12 Lt 1	5	300	400	340	65.74	81.61	53.44	13.96	25.79	70.77	96.56	93.0508	10	155.08	82.6497	**P10 - 80**	88.30579	80.64	66.53823	170	**P10 - 170**
As 7-8 Lt 2	5	300	400	340	65.74	81.61	52.69	12.7	25.79	68.66	94.45	90.9403	10	151.57	84.5678	**P10 - 80**	86.19529	80.64	63.02073	170	**P10 - 170**
As 8-9 Lt 2	5	300	400	340	65.74	81.61	50.93	13.27	25.79	67.41	93.20	89.6908	10	149.48	85	**P10 - 80**	84.94579	80.64	60.93823	170	**P10 - 170**
As 9-10 Lt 2	5	300	400	340	65.74	81.61	50.64	13.29	25.79	67.13	92.91	89.4073	10	149.01	85	**P10 - 80**	84.66229	80.64	60.46573	170	**P10 - 170**
As10-11 Lt 2	5	300	400	340	65.74	81.61	50.71	13.29	25.79	67.20	92.99	89.4808	10	149.13	85	**P10 - 80**	84.73579	80.64	60.58823	170	**P10 - 170**
As 11-12 Lt 2	5	300	400	340	33.78	81.61	52.78	13.44	20.19	69.53	89.72	86.9786	10	144.96	85	**P10 - 80**	83.26291	80.64	58.13344	170	**P10 - 170**
As 7-8 Lt 3	5	300	400	340	33.78	81.61	38.25	14.28	20.19	55.16	75.35	72.6041	10	121.01	85	**P10 - 80**	68.88841	80.64	34.17594	170	**P10 - 170**
As 8-9 Lt 3	5	300	400	340	33.78	81.61	51.26	13.23	20.19	67.71	87.91	85.1621	10	141.94	85	**P10 - 80**	81.44641	80.64	55.10594	170	**P10 - 170**
As 9-10 Lt 3	5	300	400	340	33.78	81.61	50.6	13.02	20.19	66.80	86.99	84.2486	10	140.41	85	**P10 - 80**	80.53291	80.64	53.58344	170	**P10 - 170**
As10-11 Lt 3	5	300	400	340	33.78	81.61	51.06	13.28	20.19	67.56	87.75	85.0046	10	141.67	85	**P10 - 80**	81.28891	80.64	54.84344	170	**P10 - 170**
As 11-12 Lt 3	5	300	400	340	33.78	81.61	39.19	14.34	20.19	56.21	76.40	73.6541	10	122.76	85	**P10 - 80**	69.93841	80.64	35.92594	170	**P10 - 170**

TABEL TULANGAN GESER BALOK INDUK

PORTAL ARAH Y ; X = 0 M (PORTAL 7)

													Di daerah sendi plastis			Di luar sendi plastis				
Balok	Ln (m)	b (mm)	h (mm)	d (mm)	Mnak,b (KNm)	Mnak,b' (KNm)	VD + VL (KN)	H1	1,05.Vg	Vu,b (KN)	Vu,bpakai (KN)	Ø Tul (mm)	Vs (KN)	s (mm)	Tul Geser	Vu,b (KN)	Vc (KN)	Vs (KN)	s mm	Tul Geser
As A-B Lt 1	6	350	550	450	88.71	107.12	150.53	28.56	158.06	186.61	182.331	10	303.88	55.826	**2P10 - 100**	176.143	124.51	169.057	100.348	**P10 - 100**
As B-C Lt 1	6	350	550	450	88.71	107.12	108.98	28.56	114.43	142.99	138.703	10	231.17	73.385	**P10 - 70**	132.516	124.51	96.3449	176.082	**P10 - 160**
As C-D Lt 1	6	350	550	450	88.71	107.12	108.03	28.56	113.43	141.99	137.706	10	229.51	73.917	**P10 - 70**	131.518	124.51	94.6824	179.174	**P10 - 160**
As D-E Lt 1	6	350	550	450	88.71	107.12	108.2	28.56	113.61	142.17	137.884	10	229.81	73.821	**P10 - 70**	131.697	124.51	94.9799	178.613	**P10 - 160**
As E-F Lt 1	6	350	550	450	88.71	107.12	107.29	28.56	112.65	141.21	136.929	10	228.21	74.336	**P10 - 70**	130.741	124.51	93.3874	181.658	**P10 - 160**
As F-G Lt 1	6	350	550	450	88.71	107.12	113.95	28.56	119.65	148.21	143.922	10	239.87	70.724	**P10 - 70**	137.734	124.51	105.042	161.502	**P10 - 160**
As A-B Lt 2	6	350	550	450	88.71	107.12	113.75	28.56	119.44	148.00	143.712	10	239.52	70.828	**P10 - 70**	137.524	124.51	104.692	162.042	**P10 - 160**
As B-C Lt 2	6	350	550	450	130.73	107.12	158.71	34.69	166.65	201.33	196.129	10	326.88	51.898	**2P10 - 100**	188.613	124.51	189.841	89.3622	**P10 - 80**
As C-D Lt 2	6	350	550	450	88.71	71.41	108.33	23.35	113.75	137.10	133.595	10	222.66	76.191	**P10 - 70**	128.535	124.51	89.7109	189.103	**P10 - 160**
As D-E Lt 2	6	350	550	450	88.71	71.41	108.4	23.35	113.82	137.17	133.668	10	222.78	76.149	**P10 - 70**	128.609	124.51	89.8334	188.845	**P10 - 160**
As E-F Lt 2	6	350	550	450	88.71	71.41	108.36	23.35	113.78	137.13	133.626	10	222.71	76.173	**P10 - 70**	128.567	124.51	89.7634	188.992	**P10 - 160**
As F-G Lt 2	6	350	550	450	88.71	71.41	113.46	23.35	119.13	142.48	138.981	10	231.64	73.238	**P10 - 70**	133.922	124.51	98.6884	171.901	**P10 - 160**
As A-B Lt 3	6	350	550	450	130.73	107.12	107.63	34.69	113.01	147.70	142.495	10	237.49	71.433	**2P10 - 100**	134.979	124.51	100.451	168.884	**P10 - 160**
As B-C Lt 3	6	350	550	450	88.71	71.41	109.78	23.35	115.27	138.62	135.117	10	225.20	75.333	**P10 - 70**	130.058	124.51	92.2484	183.901	**P10 - 160**
As C-D Lt 3	6	350	550	450	88.71	71.41	107.98	23.35	113.38	136.73	133.227	10	222.05	76.402	**P10 - 70**	128.168	124.51	89.0984	190.403	**P10 - 160**
As D-E Lt 3	6	350	550	450	88.707	71.413	108.84	23.35	114.28	137.63	134.13	10	223.55	75.887	**P10 - 70**	129.071	124.51	90.6034	187.24	**P10 - 160**
As E-F Lt 3	6	350	550	450	88.707	71.413	107.48	23.35	112.85	136.20	132.702	10	221.17	76.704	**P10 - 70**	127.643	124.51	88.2234	192.291	**P10 - 160**
As F-G Lt 3	6	350	550	450	88.707	107.12	117.83	28.56	123.72	152.28	147.996	10	246.66	68.777	**2P10 - 100**	141.808	124.51	111.832	151.697	**P10 - 100**

TABEL TULANGAN GESER BALOK INDUK

PORTAL ARAH Y ; X = 5 M (PORTAL 8)

Balok	Ln	b	h	d	Mnak,b	Mnak,b'	VD + VL	H1	1,05.Vg	Vu,b	Vu,bpakai	Ø Tul	Di daerah sendi plastis			Di luar sendi plastis				
	(m)	(mm)	(mm)	(mm)	(KNm)	(KNm)	(KN)			(KN)	(KN)	(mm)	Vs (KN)	s (mm)	Tul Geser	Vu,b (KN)	Vc (KN)	Vs (KN)	s mm	Tul Geser
As A-B Lt 1	6	350	550	450	130.73	107.12	120.67	34.69	126.70	161.39	156.187	10	260.31	65.17	**2P10- 100**	148.671	124.51	123.271	137.62	**P10 - 100**
As B-C Lt 1	6	350	550	450	130.73	107.12	140.61	34.69	147.64	182.33	177.124	10	295.21	57.467	**2P10- 100**	169.608	124.51	158.166	107.258	**P10 - 100**
As C-D Lt 1	6	350	550	450	130.73	107.12	140.21	34.69	147.22	181.91	176.704	10	294.51	57.604	**2P10- 100**	169.188	124.51	157.466	107.735	**P10 - 100**
As D-E Lt 1	6	350	550	450	130.73	107.12	139.94	34.69	146.94	181.62	176.42	10	294.03	57.696	**2P10- 100**	168.905	124.51	156.993	108.059	**P10 - 100**
As E-F Lt 1	6	350	550	450	130.73	107.12	141.32	34.69	148.39	183.07	177.869	10	296.45	57.226	**2P10- 100**	170.354	124.51	159.408	106.422	**P10 - 100**
As F-G Lt 1	6	350	550	450	216.20	101.40	151.49	46.32	159.06	205.38	198.433	10	330.72	51.296	**2P10- 100**	188.398	124.51	189.482	89.5315	**P10 - 80**
As A-B Lt 2	6	350	550	450	130.73	107.12	150.31	34.69	157.83	192.51	187.309	10	312.18	54.342	**2P10- 100**	179.793	124.51	175.141	96.8626	**P10 - 80**
As B-C Lt 2	6	350	550	450	130.73	107.12	142.55	34.69	149.68	184.36	179.161	10	298.60	56.814	**2P10- 100**	171.645	124.51	161.561	105.004	**P10 - 100**
As C-D Lt 2	6	350	550	450	130.73	107.12	142.44	34.69	149.56	184.25	179.045	10	298.41	56.85	**2P10- 100**	171.53	124.51	161.368	105.13	**P10 - 100**
As D-E Lt 2	6	350	550	450	130.73	107.12	139.41	34.69	146.38	181.07	175.864	10	293.11	57.879	**2P10- 100**	168.348	124.51	156.066	108.701	**P10 - 100**
As E-F Lt 2	6	350	550	450	130.73	107.12	139.69	34.69	146.67	181.36	176.158	10	293.60	57.782	**2P10- 100**	168.642	124.51	156.556	108.361	**P10 - 100**
As F-G Lt 2	6	350	550	450	130.73	107.12	147.65	34.69	155.03	189.72	184.516	10	307.53	55.165	**2P10- 100**	177	124.51	170.486	99.5073	**P10 - 80**
As A-B Lt 3	6	350	550	450	216.20	101.40	155.85	46.32	163.64	209.96	203.011	10	338.35	50.139	**2P10- 100**	192.976	124.51	197.112	86.0659	**P10 - 80**
As B-C Lt 3	6	350	550	450	130.73	107.12	144.35	34.69	151.57	186.25	181.051	10	301.75	56.22	**2P10- 100**	173.535	124.51	164.711	102.996	**P10 - 100**
As C-D Lt 3	6	350	550	450	130.73	107.12	142.98	34.69	150.13	184.82	179.612	10	299.35	56.671	**2P10- 100**	172.097	124.51	162.313	104.518	**P10 - 100**
As D-E Lt 3	6	350	550	450	130.728	107.12	140.32	34.69	147.34	182.02	176.819	10	294.70	57.566	**2P10- 100**	169.304	124.51	157.658	107.603	**P10 - 100**
As E-F Lt 3	6	350	550	450	130.728	107.12	140.44	34.69	147.46	182.15	176.945	10	294.91	57.525	**2P10- 100**	169.43	124.51	157.868	107.46	**P10 - 100**
As F-G Lt 3	6	350	550	450	216.197	101.398	153.2	46.32	160.86	207.18	200.229	10	333.71	50.836	**2P10- 100**	190.193	124.51	192.474	88.1396	**P10 - 80**

TABEL TULANGAN GESER BALOK INDUK

PORTAL ARAH Y ; X = 10 M (PORTAL 9)

Balck	Ln	b	h	d	Mnak,b	Mnak,b'	VD + VL	H1	1,05.Vg	Vu,b	Vu,bpakai	Ø Tul	Di daerah sendi plastis			Di luar sendi plastis				
													Vs	s	Tul	Vu,b	Vc	Vs	s	Tul
	(m)	(mm)	(mm)	(mm)	(KNm)	(KNm)	(KN)			(KN)	(KN)	(mm)	(KN)	(mm)	Geser	(KN)	(KN)	(KN)	mm	Geser
As A-B Lt 1	6	350	550	450	130.728	107.12	149.88	34.69	157.37	192.06	186.857	10	311.43	54.473	**2P10 - 100**	179.342	124.51	174.388	97.2805	**P10 - 80**
As B-C Lt 1	6	350	550	450	130.728	107.12	137.19	34.69	144.05	178.74	173.533	10	289.22	58.656	**2P10 - 100**	166.017	124.51	152.181	111.476	**P10 - 100**
As C-D Lt 1	6	350	550	450	130.728	107.12	137.56	34.69	144.44	179.12	173.921	10	289.87	58.525	**2P10 - 100**	166.406	124.51	152.828	111.004	**P10 - 100**
As D-E Lt 1	6	350	550	450	130.728	107.12	136.94	34.69	143.79	178.47	173.27	10	288.78	58.745	**2P10 - 100**	165.755	124.51	151.743	111.798	**P10 - 100**
As E-F Lt 1	6	350	550	450	130.728	107.12	137.9	34.69	144.80	179.48	174.278	10	290.46	58.405	**2P10 - 100**	166.763	124.51	153.423	110.574	**P10 - 100**
As F-G Lt 1	6	350	550	450	130.728	107.12	147.41	34.69	154.78	189.47	184.264	10	307.11	55.24	**2P10 - 100**	176.748	124.51	170.066	99.7531	**P10 - 80**
As A-B Lt 2	6	350	550	450	88.707	71.413	71.51	23.35	75.09	98.44	94.9337	10	158.22	107.22	**P10 - 100**	89.8744	124.51	25.2759	225	**P10 - 200**
As B-C Lt 2	6	350	550	450	45.1309	71.413	73.79	17.00	77.48	94.48	91.9261	10	153.21	110.73	**P10 - 100**	88.2436	124.51	22.558	225	**P10 - 200**
As C-D Lt 2	6	350	550	450	88.707	71.413	143.17	23.35	150.33	173.68	170.177	10	283.63	59.813	**2P10 - 100**	165.117	124.51	150.681	112.586	**P10 - 100**
As D-E Lt 2	6	350	550	450	130.728	107.12	146.56	34.69	153.89	188.57	183.371	10	305.62	55.509	**2P10 - 100**	175.856	124.51	168.578	100.633	**P10 - 100**
As E-F Lt 2	6	350	550	450	130.728	107.12	143.93	34.69	151.13	185.81	180.61	10	301.02	56.358	**2P10 - 100**	173.094	124.51	163.976	103.458	**P10 - 100**
As F-G Lt 2	6	350	550	450	130.728	107.12	40.63	34.69	42.66	77.35	72.1447	10	120.24	112.5	**P10 - 100**	64.6294	124.51	16.799	225	**P10 - 200**
As A-B Lt 3	6	350	550	450	88.707	71.413	72.81	23.35	76.45	99.80	96.2987	10	160.50	105.7	**P10 - 100**	91.2394	124.51	27.5509	225	**P10 - 200**
As B-C Lt 3	6	350	550	450	45.1309	71.413	75.15	17.00	78.91	95.90	93.3541	10	155.59	109.03	**2P10 - 100**	89.6716	124.51	24.938	225	**P10 - 200**
As C-D Lt 3	6	350	550	450	88.707	71.413	140.91	23.35	147.96	171.31	167.804	10	279.67	60.659	**2P10 - 100**	162.744	124.51	146.726	115.621	**P10 - 100**
As D-E Lt 3	6	350	550	450	130.728	107.12	137.36	34.69	144.23	178.91	173.711	10	289.52	58.596	**2P10 - 100**	166.196	124.51	152.478	111.259	**P10 - 100**
As E-F Lt 3	6	350	550	450	130.728	107.12	137.36	34.69	144.23	178.91	173.711	10	289.52	58.596	**2P10 - 100**	166.196	124.51	152.478	111.259	**P10 - 100**
As F-G Lt 3	6	350	550	450	216.197	101.398	152.8	46.32	160.44	206.76	199.809	10	333.01	50.943	**2P10 - 100**	189.773	124.51	191.774	88.4613	**P10 - 80**

TABEL TULANGAN GESER BALOK INDUK

PORTAL ARAH Y ; X = 20 M (PORTAL 11)

													Di daerah sendi plastis			Di luar sendi plastis				
Balok	Ln	b	h	d	Mnak,b	Mnak,b'	VD + VL	H1	1,05.Vg	Vu,b	Vu,bpakai	Ø Tul	Vs	s	Tul	Vu,b	Vc	Vs	s	Tul
	(m)	(mm)	(mm)	(mm)	(KNm)	(KNm)	(KN)			(KN)	(KN)	(mm)	(KN)	(mm)	Geser	(KN)	(KN)	(KN)	mm	Geser
As A-B Lt 1	6	350	550	450	216.197	101.398	168.52	46.32	176.95	223.26	216.315	10	360.52	47.055	**2P10 - 80**	206.279	124.51	219.284	77.3635	**P10 -70**
As B-C Lt 1	6	350	550	450	216.197	101.398	157.1	46.32	164.96	211.27	204.324	10	340.54	49.817	**2P10 - 80**	194.288	124.51	199.299	85.1212	**P10 -70**
As C-D Lt 1	6	350	550	450	216.197	101.398	156.49	46.32	164.31	210.63	203.683	10	339.47	49.974	**2P10 - 80**	193.648	124.51	198.232	85.5796	**P10 -70**
As D-E Lt 1	6	350	550	450	216.197	101.398	156.19	46.32	164.00	210.32	203.368	10	338.95	50.051	**2P10 - 80**	193.333	124.51	197.707	85.8069	**P10 -70**
As E-F Lt 1	6	350	550	450	216.197	101.398	157.7	46.32	165.59	211.90	204.954	10	341.59	49.664	**2P10 - 80**	194.918	124.51	200.349	84.6751	**P10 -70**
As F-G Lt 1	6	350	550	450	216.197	101.398	168.82	46.32	177.26	223.58	216.63	10	361.05	46.987	**2P10 - 80**	206.594	124.51	219.809	77.1787	**P10 -70**
As A-B Lt 2	6	350	550	450	216.197	101.398	167.36	46.32	175.73	222.04	215.097	10	358.49	47.322	**2P10 - 80**	205.061	124.51	217.254	78.0864	**P10 -70**
As B-C Lt 2	6	350	550	450	216.197	101.398	159.63	46.32	167.61	213.93	206.98	10	344.97	49.178	**2P10 - 80**	196.945	124.51	203.727	83.2713	**P10 -70**
As C-D Lt 2	6	350	550	450	216.197	101.398	158.81	46.32	166.75	213.07	206.119	10	343.53	49.383	**2P10 - 80**	196.084	124.51	202.292	83.862	**P10 -70**
As D-E Lt 2	6	350	550	450	216.197	101.398	156.08	46.32	163.88	210.20	203.253	10	338.75	50.079	**2P10 - 80**	193.217	124.51	197.514	85.8905	**P10 -70**
As E-F Lt 2	6	350	550	450	216.197	101.398	155.95	46.32	163.75	210.06	203.116	10	338.53	50.113	**2P10 - 80**	193.081	124.51	197.287	85.9895	**P10 -70**
As F-G Lt 2	6	350	550	450	216.197	101.398	164.67	46.32	172.90	219.22	212.272	10	353.79	47.951	**2P10 - 80**	202.237	124.51	212.547	79.8158	**P10 -70**
As A-B Lt 3	6	350	550	450	216.197	101.398	173.49	46.32	182.16	228.48	221.533	10	369.22	45.947	**2P10 - 80**	211.498	124.51	227.982	74.4121	**P10 -70**
As B-C Lt 3	6	350	550	450	216.197	101.398	160.78	46.32	168.82	215.13	208.188	10	346.98	48.892	**2P10 - 80**	198.152	124.51	205.739	82.4568	**P10 -70**
As C-D Lt 3	6	350	550	450	216.197	101.398	159.32	46.32	167.29	213.60	206.655	10	344.42	49.255	**2P10 - 80**	196.619	124.51	203.184	83.4936	**P10 -70**
As D-E Lt 3	6	350	550	450	216.197	101.398	156.62	46.32	164.45	210.77	203.82	10	339.70	49.94	**2P10 - 80**	193.784	124.51	198.459	85.4815	**P10 -70**
As E-F Lt 3	6	350	550	450	216.197	101.398	157.33	46.32	165.20	211.51	204.565	10	340.94	49.758	**2P10 - 80**	194.53	124.51	199.702	84.9497	**P10 -70**
As F-G Lt 3	6	350	550	450	216.197	101.398	170.8	46.32	179.34	225.66	218.709	10	364.51	46.54	**2P10 - 80**	208.673	124.51	223.274	75.981	**P10 -70**

TABEL TULANGAN GESER BALOK INDUK

PORTAL ARAH Y ; X = 25 M (PORTAL 12)

Balok	Ln	b	h	d	Mnak,b	Mnak,b'	VD + VL	H1	1,05.Vg	Vu,b	Vu,bpakai	Ø Tul	Di daerah sendi plastis			Di luar sendi plastis				
													Vs	s	Tul	Vu,b	Vc	Vs	s	Tul
	(m)	(mm)	(mm)	(mm)	(KNm)	(KNm)	(KN)			(KN)	(KN)	(mm)	(KN)	(mm)	Geser	(KN)	(KN)	(KN)	mm	Geser
As A-B Lt 1	6	350	550	450	130.728	107.12	161.98	34.69	170.08	204.77	199.562	10	332.60	51.005	**2P10 - 100**	192.047	124.51	195.563	86.7473	**P10 - 80**
As B-C Lt 1	6	350	550	450	130.728	107.12	152.3	34.69	159.92	194.60	189.398	10	315.66	53.743	**2P10 - 100**	181.883	124.51	178.623	94.9741	**P10 - 80**
As C-D Lt 1	6	350	550	450	130.728	107.12	151.48	34.69	159.05	193.74	188.537	10	314.23	53.988	**2P10 - 100**	181.022	124.51	177.188	95.7433	**P10 - 80**
As D-E Lt 1	6	350	550	450	130.728	107.12	151.28	34.69	158.84	193.53	188.327	10	313.88	54.048	**2P10 - 100**	180.812	124.51	176.838	95.9328	**P10 - 80**
As E-F Lt 1	6	350	550	450	130.728	107.12	152.3	34.69	159.92	194.60	189.398	10	315.66	53.743	**2P10 - 100**	181.883	124.51	178.623	94.9741	**P10 - 80**
As F-G Lt 1	6	350	550	450	130.728	107.12	161.83	34.69	169.92	204.61	199.405	10	332.34	51.046	**2P10 - 100**	191.889	124.51	195.301	86.8639	**P10 - 80**
As A-B Lt 2	6	350	550	450	130.728	107.12	158.6	34.69	166.53	201.22	196.013	10	326.69	51.929	**2P10 - 100**	188.498	124.51	189.648	89.4529	**P10 - 80**
As B-C Lt 2	6	350	550	450	130.728	107.12	151.56	34.69	159.14	193.82	188.621	10	314.37	53.964	**2P10 - 100**	181.106	124.51	177.328	95.6677	**P10 - 80**
As C-D Lt 2	6	350	550	450	130.728	107.12	151.34	34.69	158.91	193.59	188.39	10	313.98	54.03	**2P10 - 100**	180.875	124.51	176.943	95.8758	**P10 - 80**
As D-E Lt 2	6	350	550	450	130.728	107.12	151.44	34.69	159.01	193.70	188.495	10	314.16	54	**2P10 - 100**	180.98	124.51	177.118	95.7811	**P10 - 80**
As E-F Lt 2	6	350	550	450	130.728	107.12	151.43	34.69	159.00	193.69	188.485	10	314.14	54.003	**2P10 - 100**	180.969	124.51	177.101	95.7906	**P10 - 80**
As F-G Lt 2	6	350	550	450	130.728	107.12	158.71	34.69	166.65	201.33	196.129	10	326.88	51.898	**2P10 - 100**	188.613	124.51	189.841	89.3622	**P10 - 80**
As A-B Lt 3	6	350	550	450	130.728	107.12	163.92	34.69	172.12	206.80	201.599	10	336.00	50.49	**2P10 - 100**	194.084	124.51	198.958	85.267	**P10 - 80**
As B-C Lt 3	6	350	550	450	130.728	107.12	151.69	34.69	159.27	193.96	188.758	10	314.60	53.925	**2P10 - 100**	181.242	124.51	177.556	95.5451	**P10 - 80**
As C-D Lt 3	6	350	550	450	130.728	107.12	151.57	34.69	159.15	193.83	188.632	10	314.39	53.961	**2P10 - 100**	181.116	124.51	177.346	95.6582	**P10 - 80**
As D-E Lt 3	6	350	550	450	130.728	107.12	151.58	34.69	159.16	193.85	188.642	10	314.40	53.958	**2P10 - 100**	181.127	124.51	177.363	95.6488	**P10 - 80**
As E-F Lt 3	6	350	550	450	130.728	107.12	152.49	34.69	160.11	194.80	189.598	10	316.00	53.686	**2P10 - 100**	182.082	124.51	178.956	94.7976	**P10 - 80**
As F-G Lt 3	6	350	550	450	130.728	107.12	164.09	34.69	172.29	206.98	201.778	10	336.30	50.445	**2P10 - 100**	194.262	124.51	199.256	85.1397	**P10 - 80**

PERHITUNGAN M nak - BALOK INDUK PADA TUMPUAN

PORTAL ARAH Y ; X = 0 M (PORTAL 7)

Balok	Tul tump		Tul		As tumpuan		As	ρ	ρ'	ρ1	ρ lap	fs'	fs' pakai	a	Mn1	Mn2	Mnak-	Rn	Mnak+
Induk	atas	bawah	Lap		As	As'	lap					mpa	mpa	mm2	KNm	KNm	KNm	mpa	KNm
As A-B Lt 1	5 D 19	3 D 19	3	D 19	1417	850	850	0.0090	0.0054	0.0036	0.0054	1111	360	30.48	88.71	107.12	195.83	1.84	130.73
As B-C Lt 1	5 D 19	3 D 19	3	D 19	1417	850	850	0.0090	0.0054	0.0036	0.0054	1111	360	30.48	88.71	107.12	195.83	1.84	130.73
As C-D Lt 1	5 D 19	3 D 19	3	D 19	1417	850	850	0.0090	0.0054	0.0036	0.0054	1111	360	30.48	88.71	107.12	195.83	1.84	130.73
As D-E Lt 1	5 D 19	3 D 19	3	D 19	1417	850	850	0.0090	0.0054	0.0036	0.0054	1111	360	30.48	88.71	107.12	195.83	1.84	130.73
As E-F Lt 1	5 D 19	3 D 19	3	D 19	1417	850	850	0.0090	0.0054	0.0036	0.0054	1111	360	30.48	88.71	107.12	195.83	1.84	130.73
As F-G Lt 1	5 D 19	3 D 19	3	D 19	1417	850	850	0.0090	0.0054	0.0036	0.0054	1111	360	30.48	88.71	107.12	195.83	1.84	130.73
As A-B Lt 2	5 D 19	3 D 19	3	D 19	1417	850	850	0.0090	0.0054	0.0036	0.0054	1111	360	30.48	88.71	107.12	195.83	1.84	130.73
As B-C Lt 2	6 D 19	3 D 19	4	D 19	1700	850	1134	0.0108	0.0054	0.0054	0.0072	541	360	45.72	130.73	107.12	237.85	2.42	171.20
As C-D Lt 2	4 D 19	2 D 19	3	D 19	1134	567	850	0.0072	0.0036	0.0036	0.0054	1111	360	30.48	88.71	71.41	160.12	1.84	130.73
As D-E Lt 2	4 D 19	2 D 19	3	D 19	1134	567	850	0.0072	0.0036	0.0036	0.0054	1111	360	30.48	88.71	71.41	160.12	1.84	130.73
As E-F Lt 2	4 D 19	2 D 19	3	D 19	1134	567	850	0.0072	0.0036	0.0036	0.0054	1111	360	30.48	88.71	71.41	160.12	1.84	130.73
As F-G Lt 2	4 D 19	2 D 19	3	D 19	1134	567	850	0.0072	0.0036	0.0036	0.0054	1111	360	30.48	88.71	71.41	160.12	1.84	130.73
As A-B Lt 3	6 D 19	3 D 19	4	D 19	1700	850	1134	0.0108	0.0054	0.0054	0.0072	541	360	45.72	130.73	107.12	237.85	2.42	171.20
As B-C Lt 3	4 D 19	2 D 19	3	D 19	1134	567	850	0.0072	0.0036	0.0036	0.0054	1111	360	30.48	88.71	71.41	160.12	1.84	130.73
As C-D Lt 3	4 D 19	2 D 19	3	D 19	1134	567	850	0.0072	0.0036	0.0036	0.0054	1111	360	30.48	88.71	71.41	160.12	1.84	130.73
As D-E Lt 3	4 D 19	2 D 19	3	567	1134	567	850	0.0072	0.0036	0.0036	0.0054	1111	360	30.48	88.71	71.41	160.12	1.84	130.73
As E-F Lt 3	4 D 19	2 D 19	3	567	1134	567	850	0.0072	0.0036	0.0036	0.0054	1111	360	30.48	88.71	71.41	160.12	1.84	130.73
As F-G Lt 3	5 D 19	3 D 19	4	850	1417	850	1134	0.0090	0.0054	0.0036	0.0072	1111	360	30.48	88.71	107.12	195.83	2.42	171.20

PERHITUNGAN M nak - BALOK INDUK PADA TUMPUAN

PORTAL ARAH Y ; X = 5 M (PORTAL 8)

Balok	Tul tump		Tul		As tumpuan		As	ρ	p'	ρl	p lap	fs'	fs' pakai	a	Mn1	Mn2	Mnak-	Rn	Mnak+
Induk	atas	bawah	Lap		As	As'	lap					mpa	mpa	mm2	KNm	KNm	KNm	mpa	KNm
As A-B Lt 1	6 D 19	3 D 19	5	D 19	1700	850.2	1416.9	0.010796	0.005398	0.005398	0.008996	540.77	360	45.7226	130.7283	107.12	237.8478	2.9645	210.10984
As B-C Lt 1	6 D 19	3 D 19	5	D 19	1700	850.2	1416.9	0.010796	0.005398	0.005398	0.008996	540.77	360	45.7226	130.7283	107.12	237.8478	2.9645	210.10984
As C-D Lt 1	6 D 19	3 D 19	5	D 19	1700	850.2	1416.9	0.010796	0.005398	0.005398	0.008996	540.77	360	45.7226	130.7283	107.12	237.8478	2.9645	210.10984
As D-E Lt 1	6 D 19	3 D 19	5	D 19	1700	850.2	1416.9	0.010796	0.005398	0.005398	0.008996	540.77	360	45.7226	130.7283	107.12	237.8478	2.9645	210.10984
As E-F Lt 1	6 D 19	3 D 19	5	D 19	1700	850.2	1416.9	0.010796	0.005398	0.005398	0.008996	540.77	360	45.7226	130.7283	107.12	237.8478	2.9645	210.10984
As F-G Lt 1	8 D 19	4 D 19	5	D 19	2267	1134	1416.9	0.014394	0.007197	0.007197	0.008996	255.58	255.579	78.6465	216.1966	101.398	317.5947	2.9645	210.10984
As A-B Lt 2	6 D 19	3 D 19	5	D 19	1700	850.2	1416.9	0.010796	0.005398	0.005398	0.008996	540.77	360	45.7226	130.7283	107.12	237.8478	2.9645	210.10984
As B-C Lt 2	6 D 19	3 D 19	5	D 19	1700	850.2	1416.9	0.010796	0.005398	0.005398	0.008996	540.77	360	45.7226	130.7283	107.12	237.8478	2.9645	210.10984
As C-D Lt 2	6 D 19	3 D 19	5	D 19	1700	850.2	1416.9	0.010796	0.005398	0.005398	0.008996	540.77	360	45.7226	130.7283	107.12	237.8478	2.9645	210.10984
As D-E Lt 2	6 D 19	3 D 19	5	D 19	1700	850.2	1416.9	0.010796	0.005398	0.005398	0.008996	540.77	360	45.7226	130.7283	107.12	237.8478	2.9645	210.10984
As E-F Lt 2	6 D 19	3 D 19	5	D 19	1700	850.2	1416.9	0.010796	0.005398	0.005398	0.008996	540.77	360	45.7226	130.7283	107.12	237.8478	2.9645	210.10984
As F-G Lt 2	6 D 19	3 D 19	5	D 19	1700	850.2	1416.9	0.010796	0.005398	0.005398	0.008996	540.77	360	45.7226	130.7283	107.12	237.8478	2.9645	210.10984
As A-B Lt 3	8 D 19	4 D 19	5	D 19	2267	1134	1416.9	0.014394	0.007197	0.007197	0.008996	255.58	255.579	78.6465	216.1966	101.398	317.5947	2.9645	210.10984
As B-C Lt 3	6 D 19	3 D 19	5	D 19	1700	850.2	1416.9	0.010796	0.005398	0.005398	0.008996	540.77	360	45.7226	130.7283	107.12	237.8478	2.9645	210.10984
As C-D Lt 3	6 D 19	3 D 19	5	D 19	1700	850.2	1416.9	0.010796	0.005398	0.005398	0.008996	540.77	360	45.7226	130.7283	107.12	237.8478	2.9645	210.10984
As D-E Lt 3	6 D 19	3 D 19	5	850	1700	850.2	1416.9	0.010796	0.005398	0.005398	0.008996	540.77	360	45.7226	130.7283	107.12	237.8478	2.9645	210.10984
As E-F Lt 3	6 D 19	3 D 19	5	850	1700	850.2	1416.9	0.010796	0.005398	0.005398	0.008996	540.77	360	45.7226	130.7283	107.12	237.8478	2.9645	210.10984
As F-G Lt 3	8 D 19	4 D 19	5	1134	2267	1134	1416.9	0.014394	0.007197	0.007197	0.008996	255.58	255.579	78.6465	216.1966	101.398	317.5947	2.9645	210.10984

PERHITUNGAN M nak - BALOK INDUK PADA TUMPUAN

PORTAL ARAH Y ; X = 15 M (PORTAL 10)

Balok	Tul tump		Tul		As tumpuan		As	ρ	ρ'	ρ1	ρ lap	fs'	fs' pakai	a	Mn1	Mn2	Mnak-	Rn	Mnak+
Induk	atas	bawah	Lap		As	As'	lap					mpa	mpa	mm2	KNm	KNm	KNm	mpa	KNm
As A-B Lt 1	6 D 19	3 D 19	5	D 19	1700	850.2	1416.9	0.010796	0.005398	0.005398	0.008996	540.77	360	45.7226	130.7283	107.12	237.8478	2.9645	210.10984
As B-C Lt 1	6 D 19	3 D 19	4	D 19	1700	850.2	1133.5	0.010796	0.005398	0.005398	0.007197	540.77	360	45.7226	130.7283	107.12	237.8478	2.4155	171.19699
As C-D Lt 1	6 D 19	3 D 19	5	D 19	1700	850.2	1416.9	0.010796	0.005398	0.005398	0.008996	540.77	360	45.7226	130.7283	107.12	237.8478	2.9645	210.10984
As D-E Lt 1	6 D 19	3 D 19	5	D 19	1700	850.2	1416.9	0.010796	0.005398	0.005398	0.008996	540.77	360	45.7226	130.7283	107.12	237.8478	2.9645	210.10984
As E-F Lt 1	6 D 19	3 D 19	4	D 19	1700	850.2	1133.5	0.010796	0.005398	0.005398	0.007197	540.77	360	45.7226	130.7283	107.12	237.8478	2.4155	171.19699
As F-G Lt 1	6 D 19	3 D 19	5	D 19	1700	850.2	1416.9	0.010796	0.005398	0.005398	0.008996	540.77	360	45.7226	130.7283	107.12	237.8478	2.9645	210.10984
As A-B Lt 2	4 D 19	2 D 19	3	D 19	1134	566.8	850.16	0.007197	0.003599	0.003599	0.005398	1111.2	360	30.4817	88.70703	71.413	160.1201	1.8445	130.72959
As B-C Lt 2	3 D 19	2 D 19	3	D 19	850.2	566.8	850.16	0.005398	0.003599	0.001799	0.005398	2822.3	360	15.2409	45.13094	71.413	116.544	1.8445	130.72959
As C-D Lt 2	4 D 19	2 D 19	3	D 19	1134	566.8	850.16	0.007197	0.003599	0.003599	0.005398	1111.2	360	30.4817	88.70703	71.413	160.1201	1.8445	130.72959
As D-E Lt 2	6 D 19	3 D 19	5	D 19	1700	850.2	1416.9	0.010796	0.005398	0.005398	0.008996	540.77	360	45.7226	130.7283	107.12	237.8478	2.9645	210.10984
As E-F Lt 2	6 D 19	3 D 19	5	D 19	1700	850.2	1416.9	0.010796	0.005398	0.005398	0.008996	540.77	360	45.7226	130.7283	107.12	237.8478	2.9645	210.10984
As F-G Lt 2	6 D 19	3 D 19	5	D 19	1700	850.2	1416.9	0.010796	0.005398	0.005398	0.008996	540.77	360	45.7226	130.7283	107.12	237.8478	2.9645	210.10984
As A-B Lt 3	4 D 19	2 D 19	3	D 19	1134	566.8	850.16	0.007197	0.003599	0.003599	0.005398	1111.2	360	30.4817	88.70703	71.413	160.1201	1.8445	130.72959
As B-C Lt 3	3 D 19	2 D 19	3	D 19	850.2	566.8	850.16	0.005398	0.003599	0.001799	0.005398	2822.3	360	15.2409	45.13094	71.413	116.544	1.8445	130.72959
As C-D Lt 3	4 D 19	2 D 19	3	D 19	1134	566.8	850.16	0.007197	0.003599	0.003599	0.005398	1111.2	360	30.4817	88.70703	71.413	160.1201	1.8445	130.72959
As D-E Lt 3	6 D 19	3 D 19	5	850	1700	850.2	1416.9	0.010796	0.005398	0.005398	0.008996	540.77	360	45.7226	130.7283	107.12	237.8478	2.9645	210.10984
As E-F Lt 3	6 D 19	3 D 19	4	850	1700	850.2	1133.5	0.010796	0.005398	0.005398	0.007197	540.77	360	45.7226	130.7283	107.12	237.8478	2.4155	171.19699
As F-G Lt 3	6 D 19	3 D 19	5	850	1700	850.2	1416.9	0.010796	0.005398	0.005398	0.008996	540.77	360	45.7226	130.7283	107.12	237.8478	2.9645	210.10984

PERHITUNGAN M nak - BALOK INDUK PADA TUMPUAN

PORTAL ARAH Y ; X = 20 M (PORTAL 11)

Balok	Tul tump		Tul		As tumpuan		As	ρ	ρ'	ρ1	ρ lap	fs'	fs' pakai	a	Mn1	Mn2	Mnak-	Rn	Mnak+
Induk	atas	bawah	Lap		As	As'	lap					mpa	mpa	mm2	KNm	KNm	KNm	mpa	KNm
As A-B Lt 1	8 D 19	4 D 19	6	D 19	2267	1134	1700.3	0.014394	0.007197	0.007197	0.010796	255.58	255.579	78.6465	216.1966	101.398	317.5947	3.4916	247.46812
As B-C Lt 1	8 D 19	4 D 19	5	D 19	2267	1134	1416.9	0.014394	0.007197	0.007197	0.008996	255.58	255.579	78.6465	216.1966	101.398	317.5947	2.9645	210.10984
As C-D Lt 1	8 D 19	4 D 19	5	D 19	2267	1134	1416.9	0.014394	0.007197	0.007197	0.008996	255.58	255.579	78.6465	216.1966	101.398	317.5947	2.9645	210.10984
As D-E Lt 1	8 D 19	4 D 19	5	D 19	2267	1134	1416.9	0.014394	0.007197	0.007197	0.008996	255.58	255.579	78.6465	216.1966	101.398	317.5947	2.9645	210.10984
As E-F Lt 1	8 D 19	4 D 19	5	D 19	2267	1134	1416.9	0.014394	0.007197	0.007197	0.008996	255.58	255.579	78.6465	216.1966	101.398	317.5947	2.9645	210.10984
As F-G Lt 1	8 D 19	4 D 19	6	D 19	2267	1134	1700.3	0.014394	0.007197	0.007197	0.010796	255.58	255.579	78.6465	216.1966	101.398	317.5947	3.4916	247.46812
As A-B Lt 2	8 D 19	4 D 19	5	D 19	2267	1134	1416.9	0.014394	0.007197	0.007197	0.008996	255.58	255.579	78.6465	216.1966	101.398	317.5947	2.9645	210.10984
As B-C Lt 2	8 D 19	4 D 19	5	D 19	2267	1134	1416.9	0.014394	0.007197	0.007197	0.008996	255.58	255.579	78.6465	216.1966	101.398	317.5947	2.9645	210.10984
As C-D Lt 2	8 D 19	4 D 19	5	D 19	2267	1134	1416.9	0.014394	0.007197	0.007197	0.008996	255.58	255.579	78.6465	216.1966	101.398	317.5947	2.9645	210.10984
As D-E Lt 2	8 D 19	4 D 19	5	D 19	2267	1134	1416.9	0.014394	0.007197	0.007197	0.008996	255.58	255.579	78.6465	216.1966	101.398	317.5947	2.9645	210.10984
As E-F Lt 2	8 D 19	4 D 19	5	D 19	2267	1134	1416.9	0.014394	0.007197	0.007197	0.008996	255.58	255.579	78.6465	216.1966	101.398	317.5947	2.9645	210.10984
As F-G Lt 2	8 D 19	4 D 19	5	D 19	2267	1134	1416.9	0.014394	0.007197	0.007197	0.008996	255.58	255.579	78.6465	216.1966	101.398	317.5947	2.9645	210.10984
As A-B Lt 3	8 D 19	4 D 19	6	D 19	2267	1134	1700.3	0.014394	0.007197	0.007197	0.010796	255.58	255.579	78.6465	216.1966	101.398	317.5947	3.4916	247.46812
As B-C Lt 3	8 D 19	4 D 19	5	D 19	2267	1134	1416.9	0.014394	0.007197	0.007197	0.008996	255.58	255.579	78.6465	216.1966	101.398	317.5947	2.9645	210.10984
As C-D Lt 3	8 D 19	4 D 19	5	D 19	2267	1134	1416.9	0.014394	0.007197	0.007197	0.008996	255.58	255.579	78.6465	216.1966	101.398	317.5947	2.9645	210.10984
As D-E Lt 3	8 D 19	4 D 19	5	1134	2267	1134	1416.9	0.014394	0.007197	0.007197	0.008996	255.58	255.579	78.6465	216.1966	101.398	317.5947	2.9645	210.10984
As E-F Lt 3	8 D 19	4 D 19	5	1134	2267	1134	1416.9	0.014394	0.007197	0.007197	0.008996	255.58	255.579	78.6465	216.1966	101.398	317.5947	2.9645	210.10984
As F-G Lt 3	8 D 19	4 D 19	6	1134	2267	1134	1700.3	0.014394	0.007197	0.007197	0.010796	255.58	255.579	78.6465	216.1966	101.398	317.5947	3.4916	247.46812

PERHITUNGAN M nak - BALOK INDUK PADA TUMPUAN

PORTAL ARAH Y ; X = 10 M (PORTAL 9)

Balok	Tul tump		Tul		As tumpuan		As	ρ	ρ'	ρ1	ρ lap	fs'	fs' pakai	a	Mn1	Mn2	Mnak-	Rn	Mnak+
Induk	atas	bawah	Lap		As	As'	lap					mpa	mpa	mm2	KNm	KNm	KNm	mpa	KNm
As A-B Lt 1	6 D 19	3 D 19	5	D 19	1700	850.2	1416.9	0.010796	0.005398	0.005398	0.008996	540.77	360	45.7226	130.7283	107.12	237.8478	2.9645	210.10984
As B-C Lt 1	6 D 19	3 D 19	4	D 19	1700	850.2	1133.5	0.010796	0.005398	0.005398	0.007197	540.77	360	45.7226	130.7283	107.12	237.8478	2.4155	171.19699
As C-D Lt 1	6 D 19	3 D 19	5	D 19	1700	850.2	1416.9	0.010796	0.005398	0.005398	0.008996	540.77	360	45.7226	130.7283	107.12	237.8478	2.9645	210.10984
As D-E Lt 1	6 D 19	3 D 19	5	D 19	1700	850.2	1416.9	0.010796	0.005398	0.005398	0.008996	540.77	360	45.7226	130.7283	107.12	237.8478	2.9645	210.10984
As E-F Lt 1	6 D 19	3 D 19	4	D 19	1700	850.2	1133.5	0.010796	0.005398	0.005398	0.007197	540.77	360	45.7226	130.7283	107.12	237.8478	2.4155	171.19699
As F-G Lt 1	6 D 19	3 D 19	5	D 19	1700	850.2	1416.9	0.010796	0.005398	0.005398	0.008996	540.77	360	45.7226	130.7283	107.12	237.8478	2.9645	210.10984
As A-B Lt 2	4 D 19	2 D 19	3	D 19	1134	566.8	850.16	0.007197	0.003599	0.003599	0.005398	1111.2	360	30.4817	88.70703	71.413	160.1201	1.8445	130.72959
As B-C Lt 2	3 D 19	2 D 19	3	D 19	850.2	566.8	850.16	0.005398	0.003599	0.001799	0.005398	2822.3	360	15.2409	45.13094	71.413	116.544	1.8445	130.72959
As C-D Lt 2	4 D 19	2 D 19	3	D 19	1134	566.8	850.16	0.007197	0.003599	0.003599	0.005398	1111.2	360	30.4817	88.70703	71.413	160.1201	1.8445	130.72959
As D-E Lt 2	6 D 19	3 D 19	5	D 19	1700	850.2	1416.9	0.010796	0.005398	0.005398	0.008996	540.77	360	45.7226	130.7283	107.12	237.8478	2.9645	210.10984
As E-F Lt 2	6 D 19	3 D 19	4	D 19	1700	850.2	1133.5	0.010796	0.005398	0.005398	0.007197	540.77	360	45.7226	130.7283	107.12	237.8478	2.4155	171.19699
As F-G Lt 2	6 D 19	3 D 19	5	D 19	1700	850.2	1416.9	0.010796	0.005398	0.005398	0.008996	540.77	360	45.7226	130.7283	107.12	237.8478	2.9645	210.10984
As A-B Lt 3	4 D 19	2 D 19	3	D 19	1134	566.8	850.16	0.007197	0.003599	0.003599	0.005398	1111.2	360	30.4817	88.70703	71.413	160.1201	1.8445	130.72959
As B-C Lt 3	3 D 19	2 D 19	3	D 19	850.2	566.8	850.16	0.005398	0.003599	0.001799	0.005398	2822.3	360	15.2409	45.13094	71.413	116.544	1.8445	130.72959
As C-D Lt 3	4 D 19	2 D 19	3	D 19	1134	566.8	850.16	0.007197	0.003599	0.003599	0.005398	1111.2	360	30.4817	88.70703	71.413	160.1201	1.8445	130.72959
As D-E Lt 3	6 D 19	3 D 19	5	850	1700	850.2	1416.9	0.010796	0.005398	0.005398	0.008996	540.77	360	45.7226	130.7283	107.12	237.8478	2.9645	210.10984
As E-F Lt 3	6 D 19	3 D 19	4	850	1700	850.2	1133.5	0.010796	0.005398	0.005398	0.007197	540.77	360	45.7226	130.7283	107.12	237.8478	2.4155	171.19699
As F-G Lt 3	8 D 19	4 D 19	5	1134	2267	1134	1416.9	0.014394	0.007197	0.007197	0.008996	255.58	255.579	78.6465	216.1966	101.398	317.5947	2.9645	210.10984

PERHITUNGAN M nak - BALOK INDUK PADA TUMPUAN

PORTAL ARAH X ; Y= 0 M (PORTAL A)

Balok Induk	Tul tump atas	Tul tump bawah	Tul Lap	As tumpuan As	As tumpuan As'	As lap	ρ	ρ'	ρ1	ρ lap	fs' mpa	fs' pakai mpa	a mm2	Mn1 KNm	Mn2 KNm	Mnak- KNm	Rn mpa	Mnak+ KNm
As 7-8 Lt 1	4 D 19	2 D 19	2 D 19	1133.5	567	567	0.0111	0.0056	0.0056	0.0056	260	260.46809	45.39	82.64	41.34	123.98	1.90	65.75
As 8-9 Lt 1	4 D 19	2 D 19	2 D 19	1133.5	567	567	0.0111	0.0056	0.0056	0.0056	260	260.46809	45.39	82.64	41.34	123.98	1.90	65.75
As 9-10 Lt 1	4 D 19	2 D 19	2 D 19	1133.5	567	567	0.0111	0.0056	0.0056	0.0056	260	260.46809	45.39	82.64	41.34	123.98	1.90	65.75
As10-11 Lt 1	4 D 19	2 D 19	2 D 19	1133.5	567	567	0.0111	0.0056	0.0056	0.0056	260	260.46809	45.39	82.64	41.34	123.98	1.90	65.75
As 11-12 Lt 1	4 D 19	2 D 19	2 D 19	1133.5	567	567	0.0111	0.0056	0.0056	0.0056	260	260.46809	45.39	82.64	41.34	123.98	1.90	65.75
As 7-8 Lt 2	4 D 19	2 D 19	2 D 19	1133.5	567	567	0.0111	0.0056	0.0056	0.0056	260	260.46809	45.39	82.64	41.34	123.98	1.90	65.75
As 8-9 Lt 2	3 D 19	2 D 19	2 D 19	850.16	567	567	0.0083	0.0056	0.0028	0.0056	1121	360	17.78	33.78	57.13	90.91	1.90	65.75
As 9-10 Lt 2	4 D 19	2 D 19	2 D 19	1133.5	567	567	0.0111	0.0056	0.0056	0.0056	260	260.46809	45.39	82.64	41.34	123.98	1.90	65.75
As10-11 Lt 2	3 D 19	2 D 19	2 D 19	850.16	567	567	0.0083	0.0056	0.0028	0.0056	1121	360	17.78	33.78	57.13	90.91	1.90	65.75
As 11-12 Lt 2	3 D 19	2 D 19	2 D 19	850.16	567	567	0.0083	0.0056	0.0028	0.0056	1121	360	17.78	33.78	57.13	90.91	1.90	65.75
As 7-8 Lt 3	3 D 19	2 D 19	2 D 19	850.16	567	567	0.0083	0.0056	0.0028	0.0056	1121	360	17.78	33.78	57.13	90.91	1.90	65.75
As 8-9 Lt 3	3 D 19	2 D 19	2 D 19	850.16	567	567	0.0083	0.0056	0.0028	0.0056	1121	360	17.78	33.78	57.13	90.91	1.90	65.75
As 9-10 Lt 3	3 D 19	2 D 19	2 D 19	850.16	567	567	0.0083	0.0056	0.0028	0.0056	1121	360	17.78	33.78	57.13	90.91	1.90	65.75
As10-11 Lt 3	3 D 19	2 D 19	2 D 19	850.16	567	567	0.0083	0.0056	0.0028	0.0056	1121	360	17.78	33.78	57.13	90.91	1.90	65.75
As 11-12 Lt 3	3 D 19	2 D 19	2 D 19	850.16	567	567	0.0083	0.0056	0.0028	0.0056	1121	360	17.78	33.78	57.13	90.91	1.90	65.75

PORTAL ARAH X ; Y= 6 M (PORTAL B)

Balok Induk	Tul Terpasang atas	Tul Terpasang bawah	Tul Lap	As tumpuan As	As tumpuan As'	As lap	ρ	ρ'	ρ1	ρ lap	fs' mpa	fs' pakai mpa	a mm2	Mn1 KNm	Mn2 KNm	Mnak- KNm	Rn mpa	Mnak+ KNm
As 7-8 Lt 1	3 D 19	2 D 19	2 D 19	850.16	567	567	0.0083	0.0056	0.0028	0.0056	1121	360	17.78	33.78	57.13	90.91	1.896	65.745
As 8-9 Lt 1	4 D 19	2 D 19	2 D 19	1133.5	567	567	0.0111	0.0056	0.0056	0.0056	260	260.46809	45.39	82.64	41.34	123.98	1.896	65.745
As 9-10 Lt 1	4 D 19	2 D 19	2 D 19	1133.5	567	567	0.0111	0.0056	0.0056	0.0056	260	260.46809	45.39	82.64	41.34	123.98	1.896	65.745
As10-11 Lt 1	4 D 19	2 D 19	2 D 19	1133.5	567	567	0.0111	0.0056	0.0056	0.0056	260	260.46809	45.39	82.64	41.34	123.98	1.896	65.745
As 11-12 Lt 1	4 D 19	2 D 19	2 D 19	1133.5	567	567	0.0111	0.0056	0.0056	0.0056	260	260.46809	45.39	82.64	41.34	123.98	1.896	65.745
As 7-8 Lt 2	3 D 19	2 D 19	2 D 19	850.16	567	567	0.0083	0.0056	0.0028	0.0056	1121	360	17.78	33.78	57.13	90.91	1.896	65.745
As 8-9 Lt 2	3 D 19	2 D 19	2 D 19	850.16	567	567	0.0083	0.0056	0.0028	0.0056	1121	360	17.78	33.78	57.13	90.91	1.896	65.745
As10-11 Lt 2	3 D 19	2 D 19	2 D 19	850.16	567	567	0.0083	0.0056	0.0028	0.0056	1121	360	17.78	33.78	57.13	90.91	1.896	65.745
As 11-12 Lt 2	4 D 19	2 D 19	2 D 19	1133.5	567	567	0.0111	0.0056	0.0056	0.0056	260	260.46809	45.39	82.64	41.34	123.98	1.896	65.745
As 7-8 Lt 3	4 D 19	2 D 19	2 D 19	1133.5	567	567	0.0111	0.0056	0.0056	0.0056	260	260.46809	45.39	82.64	41.34	123.98	1.896	65.745
As 9-10 Lt 3	3 D 19	2 D 19	3 D 19	850.16	567	850	0.0083	0.0056	0.0028	0.0083	1121	360	17.78	33.78	57.13	90.91	2.765	95.898
As10-11 Lt 3	3 D 19	2 D 19	3 D 19	850.16	567	850	0.0083	0.0056	0.0028	0.0083	1121	360	17.78	33.78	57.13	90.91	2.765	95.898
As 11-12 Lt 3	3 D 19	2 D 19	2 D 19	850.16	567	567	0.0083	0.0056	0.0028	0.0056	1121	360	17.78	33.78	57.13	90.91	1.896	65.745

PERHITUNGAN M nak - BALOK INDUK PADA TUMPUAN

PORTAL ARAH X ; Y= 24 M (PORTAL E)

Balok Induk	Tul Terpasang atas	Tul Terpasang bawah	Tul Lap	As tumpuan As	As tumpuan As'	As lap	ρ	ρ'	ρ1	ρ lap	fs' mpa	fs' pakai mpa	a mm2	Mn1 KNm	Mn2 KNm	Mnak- KNm	Rn mpa	Mnak+ KNm
As 7-8 Lt 1	5 D 19	3 D 19	2 D 19	1416.9	850	567	0.0081	0.0049	0.0032	0.0056	876	360	35.56	65.74	122.42	188.17	1.896	65.745
As 8-9 Lt 1	4 D 19	2 D 19	2 D 19	1133.5	567	567	0.0065	0.0032	0.0032	0.0056	876	360	35.56	65.74	81.61	147.36	1.896	65.745
As 9-10 Lt 1	4 D 19	2 D 19	2 D 19	1133.5	567	567	0.0065	0.0032	0.0032	0.0056	876	360	35.56	65.74	81.61	147.36	1.896	65.745
As10-11 Lt 1	3 D 19	2 D 19	2 D 19	850.16	567	567	0.0049	0.0032	0.0016	0.0056	2353	360	17.78	33.78	81.61	115.39	1.896	65.745
As 11-12 Lt 1	4 D 19	2 D 19	2 D 19	1133.5	567	567	0.0065	0.0032	0.0032	0.0056	876	360	35.56	65.74	81.61	147.36	1.896	65.745
As 7-8 Lt 2	3 D 19	2 D 19	2 D 19	850.16	567	567	0.0049	0.0032	0.0016	0.0056	2353	360	17.78	33.78	81.61	115.39	1.896	65.745
As 8-9 Lt 2	3 D 19	2 D 19	2 D 19	850.16	567	567	0.0049	0.0032	0.0016	0.0056	2353	360	17.78	33.78	81.61	115.39	1.896	65.745
As 9-10 Lt 2	3 D 19	2 D 19	2 D 19	850.16	567	567	0.0049	0.0032	0.0016	0.0056	2353	360	17.78	33.78	81.61	115.39	1.896	65.745
As10-11 Lt 2	3 D 19	2 D 19	2 D 19	850.16	567	567	0.0049	0.0032	0.0016	0.0056	2353	360	17.78	33.78	81.61	115.39	1.896	65.745
As 11-12 Lt 2	3 D 19	2 D 19	2 D 19	850.16	567	567	0.0049	0.0032	0.0016	0.0056	2353	360	17.78	33.78	81.61	115.39	1.896	65.745
As 7-8 Lt 3	3 D 19	2 D 19	2 D 19	850.16	567	567	0.0049	0.0032	0.0016	0.0056	2353	360	17.78	33.78	81.61	115.39	1.896	65.745
As 8-9 Lt 3	3 D 19	2 D 19	2 D 19	850.16	567	567	0.0049	0.0032	0.0016	0.0056	2353	360	17.78	33.78	81.61	115.39	1.896	65.745
As 9-10 Lt 3	3 D 19	2 D 19	2 D 19	850.16	567	567	0.0049	0.0032	0.0016	0.0056	2353	360	17.78	33.78	81.61	115.39	1.896	65.745
As10-11 Lt 3	3 D 19	2 D 19	2 D 19	850.16	567	567	0.0049	0.0032	0.0016	0.0056	2353	360	17.78	33.78	81.61	115.39	1.896	65.745
As 11-12 Lt 3	3 D 19	2 D 19	2 D 19	850.16	567	567	0.0049	0.0032	0.0016	0.0056	2353	360	17.78	33.78	81.61	115.39	1.896	65.745

PORTAL ARAH X ; Y= 30 M (PORTAL F)

Balok Induk	Tul Terpasang atas	Tul Terpasang bawah	Tul Lap	As tumpuan As	As tumpuan As'	As lap	ρ	ρ'	ρ1	ρ lap	fs' mpa	fs' pakai mpa	a mm2	Mn1 KNm	Mn2 KNm	Mnak- KNm	Rn mpa	Mnak+ KNm
As 7-8 Lt 1	5 D 19	3 D 19	2 D 19	1416.9	850	567	0.0081	0.0049	0.0032	0.0056	876	360	35.56	65.74	122.42	188.17	1.896	65.745
As 8-9 Lt 1	4 D 19	2 D 19	2 D 19	1133.5	567	567	0.0065	0.0032	0.0032	0.0056	876	360	35.56	65.74	81.61	147.36	1.896	65.745
As 9-10 Lt 1	4 D 19	2 D 19	2 D 19	1133.5	567	567	0.0065	0.0032	0.0032	0.0056	876	360	35.56	65.74	81.61	147.36	1.896	65.745
As10-11 Lt 1	4 D 19	2 D 19	2 D 19	1133.5	567	567	0.0065	0.0032	0.0032	0.0056	876	360	35.56	65.74	81.61	147.36	1.896	65.745
As 11-12 Lt 1	3 D 19	2 D 19	2 D 19	850.16	567	567	0.0049	0.0032	0.0016	0.0056	2353	360	17.78	33.78	81.61	115.39	1.896	65.745
As 7-8 Lt 2	4 D 19	2 D 19	2 D 19	1133.5	567	567	0.0065	0.0032	0.0032	0.0056	876	360	35.56	65.74	81.61	147.36	1.896	65.745
As 8-9 Lt 2	3 D 19	2 D 19	2 D 19	850.16	567	567	0.0049	0.0032	0.0016	0.0056	2353	360	17.78	33.78	81.61	115.39	1.896	65.745
As 9-10 Lt 2	3 D 19	2 D 19	2 D 19	850.16	567	567	0.0049	0.0032	0.0016	0.0056	2353	360	17.78	33.78	81.61	115.39	1.896	65.745
As10-11 Lt 2	3 D 19	2 D 19	2 D 19	850.16	567	567	0.0049	0.0032	0.0016	0.0056	2353	360	17.78	33.78	81.61	115.39	1.896	65.745
As 11-12 Lt 2	4 D 19	2 D 19	2 D 19	1133.5	567	567	0.0065	0.0032	0.0032	0.0056	876	360	35.56	65.74	81.61	147.36	1.896	65.745
As 7-8 Lt 3	3 D 19	2 D 19	2 D 19	850.16	567	567	0.0049	0.0032	0.0016	0.0056	2353	360	17.78	33.78	81.61	115.39	1.896	65.745
As 8-9 Lt 3	3 D 19	2 D 19	2 D 19	850.16	567	567	0.0049	0.0032	0.0016	0.0056	2353	360	17.78	33.78	81.61	115.39	1.896	65.745
As 9-10 Lt 3	3 D 19	2 D 19	2 D 19	850.16	567	567	0.0049	0.0032	0.0016	0.0056	2353	360	17.78	33.78	81.61	115.39	1.896	65.745
As10-11 Lt 3	3 D 19	2 D 19	2 D 19	850.16	567	567	0.0049	0.0032	0.0016	0.0056	2353	360	17.78	33.78	81.61	115.39	1.896	65.745
As 11-12 Lt 3	3 D 19	2 D 19	2 D 19	850.16	567	567	0.0049	0.0032	0.0016	0.0056	2353	360	17.78	33.78	81.61	115.39	1.896	65.745

Perhitungan Momen Rencana Kolom Arah y

Portal	Kolom	Lantai	Mdy atas (KNm)	Mdy bawah (KNm)	Mly atas (KNm)	Mly bawah (KNm)	Mey atas (KNm)	Mey bawah (KNm)	Atas					Bawah				
									1,2MD+1,6ML (KNm)	Mb (KNm)	Ms (KNm)	Mb+Ms (KNm)	M pakai (KNm)	1,2MD+1,6ML (KNm)	Mb (KNm)	Ms (KNm)	Mb+Ms (KNm)	M pakai (KNm)
As A	A - 7	Dasar	18.6	27.5	1.8	4.5	41.8	31.7	25.2	21.231	43.89	65.121	65.121	40.2	33.1275	33.285	66.4125	40.2
		1	33.6	31.9	6.4	5.8	24.6	28.7	50.56	41.328	25.83	67.158	67.158	47.56	38.976	30.135	69.111	47.56
		2	35.2	41.3	6.4	7.7	13.9	20.5	52.48	43.008	14.595	57.603	57.603	61.88	50.6415	21.525	72.1665	61.88
		3	13.7	6.5	2.2	0.6	0.2	2.1	19.96	16.464	0.21	16.674	19.96	8.76	7.392	2.205	9.597	8.76
	A - 8	Dasar	15.6	30.8	3.9	9.3	40.3	30.5	24.96	20.0655	42.315	62.3805	62.3805	51.84	41.1285	32.025	73.1535	51.84
		1	42	39.3	13.3	12.4	23.2	27	71.68	56.6685	24.36	81.0285	81.0285	67	52.983	28.35	81.333	67
		2	43.2	50.5	13.7	16.1	14	20.1	73.76	58.3065	14.7	73.0065	73.76	86.36	68.2395	21.105	89.3445	86.36
		3	16.5	7.1	4.9	1.4	0.1	1.7	27.64	21.9555	0.105	22.0605	27.64	10.76	8.778	1.785	10.563	10.563
		praktis	0	0	0	0	0	0	0	0	0	0	0	0	0	0	0	0
	A - 9	Dasar	14.8	30.1	4.3	9.4	42.9	30.9	24.64	19.6035	45.045	64.6485	64.6485	51.16	40.488	32.445	72.933	51.16
		1	42.2	39.5	17.7	16.5	23.2	27	78.96	61.0365	24.36	85.3965	85.3965	73.8	57.0675	28.35	85.4175	73.8
		2	22.1	28.7	6.4	8.4	16.1	22.6	36.76	29.253	16.905	46.158	46.158	47.88	38.073	23.73	61.803	47.88
	A - 10	Dasar	14.8	30	4.3	9.5	42.9	30.9	24.64	19.6035	45.045	64.6485	64.6485	51.2	40.4775	32.445	72.9225	51.2
		1	39.9	37.8	13.2	12.2	24.6	28.7	69	54.369	25.83	80.199	80.199	64.88	51.219	30.135	81.354	64.88
		2	22.1	28.7	6.7	8.9	16.1	22.6	37.24	29.5365	16.905	46.4415	46.4415	48.68	38.5455	23.73	62.2755	48.68
	A - 11	Dasar	15.6	31	5.2	12.3	40.3	30.5	27.04	21.294	42.315	63.609	63.609	56.88	44.1735	32.025	76.1985	56.88
		1	39.9	37.8	13.2	12.2	24.6	28.7	69	54.369	25.83	80.199	80.199	64.88	51.219	30.135	81.354	64.88
		2	43.7	50.8	18.1	21.3	13.9	20.1	81.4	62.9895	14.595	77.5845	81.4	95.04	73.4685	21.105	94.5735	94.5735
		3	16.6	7.1	6.5	1.8	0.1	1.7	30.32	23.5725	0.105	23.6775	30.32	11.4	9.156	1.785	10.941	10.941
		praktis	0	0	0	0	0	0	0	0	0	0	0	0	0	0	0	0
	A - 12	Dasar	1.2	2.1	0.1	0.4	46.9	52.9	1.6	1.3545	49.245	50.5995	50.5995	3.16	2.583	55.545	58.128	3.16
		1	39.9	37.8	13.2	12.2	24.6	28.7	69	54.369	25.83	80.199	80.199	64.88	51.219	30.135	81.354	64.88
		2	41.6	48.7	13.3	15.8	13.9	20.7	71.2	56.2485	14.595	70.8435	71.2	83.72	66.066	21.735	87.801	83.72
		3	16	7.1	4.8	1.2	0.2	1.5	26.88	21.336	0.21	21.546	26.88	10.44	8.589	1.575	10.164	10.164

Perhitungan Momen Rencana Kolom Arah y

Portal	Kolom	Lantai	Mdy atas (KNm)	Mdy bawah (KNm)	Mly atas (KNm)	Mly bawah (KNm)	Mey atas (KNm)	Mey bawah (KNm)	Atas					Bawah				
									1,2MD+1,6ML (KNm)	Mb (KNm)	Ms (KNm)	Mb+Ms (KNm)	M pakai (KNm)	1,2MD+1,6ML (KNm)	Mb (KNm)	Ms (KNm)	Mb+Ms (KNm)	M pakai (KNm)
As C	C - 7	Dasar	0.1	0.3	0.1	0.1	51.3	44.9	0.28	0.1995	53.865	54.0645	54.0645	0.52	0.4095	47.145	47.5545	0.52
		1	0.1	0.1	0.1	0.1	24	28.5	0.28	0.1995	25.2	25.3995	25.3995	0.28	0.1995	29.925	30.1245	0.28
		2	0.2	0.1	0.5	0.7	25.2	29.6	1.04	0.6825	26.46	27.1425	27.1425	1.24	0.7665	31.08	31.8465	1.24
		3	0.1	0.2	0.1	0.1	2.9	3.6	0.28	0.1995	3.045	3.2445	3.2445	0.4	0.3045	3.78	4.0845	0.4
	C - 8	Dasar	0.1	0.1	0.1	0.1	49.2	43	0.28	0.1995	51.66	51.8595	51.8595	0.28	0.1995	45.15	45.3495	0.28
		1	0.1	0.3	0.1	0.2	37.7	40	0.28	0.1995	39.585	39.7845	39.7845	0.68	0.504	42	42.504	0.68
		2	0.2	0.1	0.2	0.2	23.8	28	0.56	0.399	24.99	25.389	25.389	0.44	0.294	29.4	29.694	0.44
		3	0.1	0.3	0.1	0.1	3.3	3.8	0.28	0.1995	3.465	3.6645	3.6645	0.52	0.4095	3.99	4.3995	0.52
		praktis	0	0	0	0	0	0	0	0	0	0	0	0	0	0	0	0
	C - 9	Dasar	0.3	1.1	0.1	0.3	45.9	40.6	0.52	0.4095	48.195	48.6045	48.6045	1.8	1.4385	42.63	44.0685	1.8
		1	0.1	0.7	0.1	0.2	30.2	31.8	0.28	0.1995	31.71	31.9095	31.9095	1.16	0.924	33.39	34.314	1.16
		2	0.6	0.7	0.1	0.1	28.9	30.7	0.88	0.7245	30.345	31.0695	31.0695	1	0.8295	32.235	33.0645	1
	C - 10	Dasar	0.3	1.1	0.1	0.3	45.9	40.6	0.52	0.4095	48.195	48.6045	48.6045	1.8	1.4385	42.63	44.0685	1.8
		1	0.1	0.7	0.1	0.3	30.2	31.8	0.28	0.1995	31.71	31.9095	31.9095	1.32	1.0185	33.39	34.4085	1.32
		2	0.6	0.7	0.1	0.1	28.9	30.7	0.88	0.7245	30.345	31.0695	31.0695	1	0.8295	32.235	33.0645	1
	C - 11	Dasar	0.1	0.2	0.1	0.1	42.9	43	0.28	0.1995	45.045	45.2445	45.2445	0.4	0.3045	45.15	45.4545	0.4
		1	0.1	0.3	0.1	0.2	37.6	40	0.28	0.1995	39.48	39.6795	39.6795	0.68	0.504	42	42.504	0.68
		2	0.2	0.1	0.3	0.1	28.1	28.1	0.72	0.4935	29.505	29.9985	29.9985	0.28	0.1995	29.505	29.7045	0.28
		3	0.1	0.3	0.1	0.2	3.3	3.8	0.28	0.1995	3.465	3.6645	3.6645	0.68	0.504	3.99	4.494	0.68
		praktis	0	0	0	0	0	0	0	0	0	0	0	0	0	0	0	0
	C - 12	Dasar	0.2	0.3	0.1	0.9	51.4	44.9	0.4	0.3045	53.97	54.2745	54.2745	1.8	1.1655	47.145	48.3105	1.8
		1	0.1	0.1	0.1	0.1	39.6	42	0.28	0.1995	41.58	41.7795	41.7795	0.28	0.1995	44.1	44.2995	0.28
		2	0.3	0.1	0.2	0.1	24	28.5	0.68	0.504	25.2	25.704	25.704	0.28	0.1995	29.925	30.1245	0.28
		3	0.1	0.3	0.1	0.1	2.9	3.5	0.28	0.1995	3.045	3.2445	3.2445	0.52	0.4095	3.675	4.0845	0.52

Perhitungan Momen Rencana Kolom Arah y

Portal	Kolom	Lantai	Mdy atas (KNm)	Mdy bawah (KNm)	Mly atas (KNm)	Mly bawah (KNm)	Mey atas (KNm)	Mey bawah (KNm)	Atas					Bawah				
									1,2MD+1,6ML (KNm)	Mb (KNm)	Ms (KNm)	Mb+Ms (KNm)	M pakai (KNm)	1,2MD+1,6ML (KNm)	Mb (KNm)	Ms (KNm)	Mb+Ms (KNm)	M pakai (KNm)
As D	D - 7	Dasar	0.1	0.1	0.1	0.2	44.8	46.9	0.28	0.1995	47.04	47.2395	47.2395	0.44	0.294	49.245	49.539	0.44
		1	0.1	0.1	0.1	0.6	39.5	41.9	0.28	0.1995	41.475	41.6745	41.6745	1.08	0.672	43.995	44.667	1.08
		2	0.1	0.1	0.1	0.1	23.8	28.3	0.28	0.1995	24.99	25.1895	25.1895	0.28	0.1995	29.715	29.9145	0.28
		3	0.1	0.1	0.1	0.1	3.6	4	0.28	0.1995	3.78	3.9795	3.9795	0.28	0.1995	4.2	4.3995	0.28
	D - 8	Dasar	0.3	0.2	0.1	0.1	49.2	42.9	0.52	0.4095	51.66	52.0695	52.0695	0.4	0.3045	45.045	45.3495	0.4
		1	0.3	0.6	0.2	0.2	37.7	39.9	0.68	0.504	39.585	40.089	40.089	1.04	0.819	41.895	42.714	1.04
		2	0.4	0.4	0.2	0.2	23.6	27.8	0.8	0.609	24.78	25.389	25.389	0.8	0.609	29.19	29.799	0.8
		3	0.1	0.1	0.1	0.1	3.6	4	0.28	0.1995	3.78	3.9795	3.9795	0.28	0.1995	4.2	4.3995	0.28
		praktis	0	0	0	0	0	0	0	0	0	0	0	0	0	0	0	0
	D - 9	Dasar	0.2	0.3	0.1	0.1	44.5	40.2	0.4	0.3045	46.725	47.0295	47.0295	0.52	0.4095	42.21	42.6195	0.52
		1	4.3	9.8	1.5	3.5	30.9	32.6	7.56	5.9325	32.445	38.3775	38.3775	17.36	13.5975	34.23	47.8275	17.36
		2	18.9	21.1	6.5	7.3	26.1	29.9	33.08	25.9875	27.405	53.3925	53.3925	37	29.0535	31.395	60.4485	37
	D - 10	Dasar	0.1	0.3	0.1	0.1	45.5	40.2	0.28	0.1995	47.775	47.9745	47.9745	0.52	0.4095	42.21	42.6195	0.52
		1	2.7	1.5	0.9	1.1	30.9	32.6	4.68	3.6855	32.445	36.1305	36.1305	3.56	2.6145	34.23	36.8445	3.56
		2	18.9	21.1	6.4	7.1	26.1	29.9	32.92	25.893	27.405	53.298	53.298	36.68	28.8645	31.395	60.2595	36.68
	D - 11	Dasar	0.3	0.2	0.1	0.1	49	42.9	0.52	0.4095	51.45	51.8595	51.8595	0.4	0.3045	45.045	45.3495	0.4
		1	0.4	0.6	0.2	0.2	37.7	39.9	0.8	0.609	39.585	40.194	40.194	1.04	0.819	41.895	42.714	1.04
		2	0.4	0.4	0.2	0.2	23.6	27.8	0.8	0.609	24.78	25.389	25.389	0.8	0.609	29.19	29.799	0.8
		3	0.1	0.1	0.1	0.1	3.6	4	0.28	0.1995	3.78	3.9795	3.9795	0.28	0.1995	4.2	4.3995	0.28
		praktis	0	0	0	0	0	0	0	0	0	0	0	0	0	0	0	0
	D - 12	Dasar	0.1	0.1	0.1	0.1	51.2	44.8	0.28	0.1995	53.76	53.9595	53.9595	0.28	0.1995	47.04	47.2395	0.28
		1	2.9	1.9	1	0.6	41.6	43.8	5.08	3.99	43.68	47.67	47.67	3.24	2.562	45.99	48.552	3.24
		2	0.1	0.1	0.2	0.2	23.8	28.3	0.44	0.294	24.99	25.284	25.284	0.44	0.294	29.715	30.009	0.44
		3	0.1	0.1	0.1	0.1	3.2	3.7	0.28	0.1995	3.36	3.5595	3.5595	0.28	0.1995	3.885	4.0845	0.28

Perhitungan Momen Rencana Kolom Arah y

Portal	Kolom	Lantai	Mdy atas (KNm)	Mdy bawah (KNm)	Mly atas (KNm)	Mly bawah (KNm)	Mey atas (KNm)	Mey bawah (KNm)	Atas					Bawah				
									1,2MD+1,6ML (KNm)	Mb (KNm)	Ms (KNm)	Mb+Ms (KNm)	M pakai (KNm)	1,2MD+1,6ML (KNm)	Mb (KNm)	Ms (KNm)	Mb+Ms (KNm)	M pakai (KNm)
As E	E - 7	Dasar	0.4	0.5	0.1	0.1	50.8	44.4	0.64	0.5145	53.34	53.8545	53.8545	0.76	0.6195	46.62	47.2395	0.76
		1	2.5	1.6	0.6	0.3	41.6	43.8	3.96	3.192	43.68	46.872	46.872	2.4	1.9635	45.99	47.9535	2.4
		2	2.3	3.6	0.5	0.7	25.2	29.6	3.56	2.8875	26.46	29.3475	29.3475	5.44	4.4415	31.08	35.5215	5.44
		3	0.8	0.4	0.1	0.2	2.6	3.2	1.12	0.9345	2.73	3.6645	3.6645	0.8	0.609	3.36	3.969	0.8
	E - 8	Dasar	0.4	0.6	0.1	0.2	48.6	42.5	0.64	0.5145	51.03	51.5445	51.5445	1.04	0.819	44.625	45.444	1.04
		1	3.9	2.7	0.9	0.5	39.7	41.7	6.12	4.9455	41.685	46.6305	46.6305	4.04	3.3075	43.785	47.0925	4.04
		2	3.2	4.8	0.7	1.1	25.1	29.3	4.96	4.0215	26.355	30.3765	30.3765	7.52	6.0795	30.765	36.8445	7.52
		3	1.1	0.5	0.1	0.4	3.1	3.5	1.48	1.2495	3.255	4.5045	4.5045	1.24	0.903	3.675	4.578	1.24
		praktis	0	0	0	0	0	0	0	0	0	0	0	0	0	0	0	0
	E - 9	Dasar	0.3	0.2	0.1	0.1	44.9	39.6	0.52	0.4095	47.145	47.5545	47.5545	0.4	0.3045	41.58	41.8845	0.4
		1	5.7	3.9	1.4	0.7	31.8	33.2	9.08	7.308	33.39	40.698	40.698	5.8	4.7565	34.86	39.6165	5.8
		2	2.2	4.3	0.1	0.6	30	33.4	2.8	2.4045	31.5	33.9045	33.9045	6.12	5.082	35.07	40.152	6.12
	E - 10	Dasar	0.3	0.2	0.1	0.1	44.9	39.6	0.52	0.4095	47.145	47.5545	47.5545	0.4	0.3045	41.58	41.8845	0.4
		1	3.9	2.7	1.3	0.7	39.7	41.7	6.76	5.3235	41.685	47.0085	47.0085	4.36	3.4965	43.785	47.2815	4.36
		2	2.2	4.3	0.2	0.7	30	30	2.96	2.499	31.5	33.999	33.999	6.28	5.1765	31.5	36.6765	6.28
	E - 11	Dasar	0.4	0.6	0.1	0.2	48.6	42.5	0.64	0.5145	51.03	51.5445	51.5445	1.04	0.819	44.625	45.444	1.04
		1	2.9	1.9	1	0.6	41.6	43.8	5.08	3.99	43.68	47.67	47.67	3.24	2.562	45.99	48.552	3.24
		2	3.3	4.8	0.9	1.6	25.1	29.3	5.4	4.3155	26.355	30.6705	30.6705	8.32	6.552	30.765	37.317	8.32
		3	1.1	0.5	0.1	0.6	3.1	3.5	1.48	1.2495	3.255	4.5045	4.5045	1.56	1.092	3.675	4.767	1.56
		praktis	0	0	0	0	0	0	0	0	0	0	0	0	0	0	0	0
	E - 12	Dasar	1.2	0.4	0.5	0.1	0.2	50.8	2.24	1.7325	0.21	1.9425	2.24	0.64	0.5145	53.34	53.8545	0.64
		1	2.9	1.9	1	0.6	41.6	50.8	44.4	3.99	43.68	47.67	47.67	3.24	2.562	53.34	55.902	3.24
		2	2.8	4.2	0.9	1.4	25.2	50.8	4.8	3.7905	26.46	30.2505	30.2505	7.28	5.733	53.34	59.073	7.28
		3	0.8	0.4	0.1	0.2	2.6	50.8	1.12	0.9345	2.73	3.6645	3.6645	0.8	0.609	53.34	53.949	0.8

Perhitungan Momen Rencana Kolom Arah y

Portal	Kolom	Lantai	Mdy atas (KNm)	Mdy bawah (KNm)	Mly atas (KNm)	Mly bawah (KNm)	Mey atas (KNm)	Mey bawah (KNm)	Atas					Bawah				
									1,2MD+1,6ML (KNm)	Mb (KNm)	Ms (KNm)	Mb+Ms (KNm)	M pakai (KNm)	1,2MD+1,6ML (KNm)	Mb (KNm)	Ms (KNm)	Mb+Ms (KNm)	M pakai (KNm)
As F	F - 7	Dasar	0.4	0.1	0.1	0.9	45.8	51.8	0.64	0.5145	48.09	48.6045	48.6045	1.56	0.9555	54.39	55.3455	1.56
		1	2.5	1.6	0.6	0.3	40.9	43.1	3.96	3.192	42.945	46.137	46.137	2.4	1.9635	45.255	47.2185	2.4
		2	2.3	3.6	0.5	0.7	24.4	26.7	3.56	2.8875	25.62	28.5075	28.5075	5.44	4.4415	28.035	32.4765	5.44
		3	0.8	0.4	0.1	0.2	3.6	4.1	1.12	0.9345	3.78	4.7145	4.7145	0.8	0.609	4.305	4.914	0.8
	F - 8	Dasar	0.7	2.4	3.9	0.1	49.6	43.9	7.08	4.4205	52.08	56.5005	56.5005	3.04	2.6145	46.095	48.7095	3.04
		1	3.9	2.7	0.9	0.5	39	40.9	6.12	4.9455	40.95	45.8955	45.8955	4.04	3.3075	42.945	46.2525	4.04
		2	3.2	4.8	0.7	1.1	24.3	28.2	4.96	4.0215	25.515	29.5365	29.5365	7.52	6.0795	29.61	35.6895	7.52
		3	1.1	0.5	0.1	0.4	4	4.3	1.48	1.2495	4.2	5.4495	5.4495	1.24	0.903	4.515	5.418	1.24
		praktis	0	0	0	0	0	0	0	0	0	0	0	0	0	0	0	0
	F - 9	Dasar	0.6	2.3	0.1	0.6	45.7	40.8	0.88	0.7245	47.985	48.7095	48.7095	3.72	2.982	42.84	45.822	3.72
		1	5.7	3.9	1.4	0.7	32.9	34.4	9.08	7.308	34.545	41.853	41.853	5.8	4.7565	36.12	40.8765	5.8
		2	2.2	4.3	0.1	0.6	25.8	29.8	2.8	2.4045	27.09	29.4945	29.4945	6.12	5.082	31.29	36.372	6.12
	F - 10	Dasar	0.6	2.3	0.1	0.6	45.7	40.8	0.88	0.7245	47.985	48.7095	48.7095	3.72	2.982	42.84	45.822	3.72
		1	3.9	2.7	1.3	0.7	39.7	41.7	6.76	5.3235	41.685	47.0085	47.0085	4.36	3.4965	43.785	47.2815	4.36
		2	2.2	4.3	0.2	0.7	25.8	29.8	2.96	2.499	27.09	29.589	29.589	6.28	5.1765	31.29	36.4665	6.28
	F - 11	Dasar	0.7	2.4	0.1	0.8	49.5	43.8	1	0.8295	51.975	52.8045	52.8045	4.16	3.276	45.99	49.266	4.16
		1	2.9	1.9	1	0.6	39.2	40.9	5.08	3.99	41.16	45.15	45.15	3.24	2.562	42.945	45.507	3.24
		2	3.3	4.8	0.9	1.6	24.2	28.2	5.4	4.3155	25.41	29.7255	29.7255	8.32	6.552	29.61	36.162	8.32
		3	1.1	0.5	0.1	0.6	4	4.3	1.48	1.2495	4.2	5.4495	5.4495	1.56	1.092	4.515	5.607	1.56
		praktis	0	0	0	0	0	0	0	0	0	0	0	0	0	0	0	0
	F - 12	Dasar	1.1	2.2	0.1	0.7	51.8	45.8	1.48	1.2495	54.39	55.6395	55.6395	3.76	2.9715	48.09	51.0615	3.76
		1	2.9	1.9	1	0.6	40.9	43.1	5.08	3.99	42.945	46.935	46.935	3.24	2.562	45.255	47.817	3.24
		2	2.8	4.2	0.9	1.4	24.4	28.7	4.8	3.7905	25.62	29.4105	29.4105	7.28	5.733	30.135	35.868	7.28
		3	0.8	0.4	0.1	0.2	3.6	4	1.12	0.9345	3.78	4.7145	4.7145	0.8	0.609	4.2	4.809	0.8

Perhitungan Momen Rencana Kolom Arah y

Portal	Kolom	Lantai	Mdy atas (KNm)	Mdy bawah (KNm)	Mly atas (KNm)	Mly bawah (KNm)	Mey atas (KNm)	Mey bawah (KNm)	Atas					Bawah				
									1,2MD+1,6ML (KNm)	Mb (KNm)	Ms (KNm)	Mb+Ms (KNm)	M pakai (KNm)	1,2MD+1,6ML (KNm)	Mb (KNm)	Ms (KNm)	Mb+Ms (KNm)	M pakai (KNm)
As G	G - 7	Dasar	18.6	27.5	1.8	4.5	40.45	30.6	25.2	21.231	42.4725	63.7035	63.7035	40.2	33.1275	32.13	65.2575	40.2
		1	33.6	31.9	6.4	5.8	24.1	28.2	50.56	41.328	25.305	66.633	66.633	47.56	38.976	29.61	68.586	47.56
		2	35.2	41.3	6.4	7.7	13.9	20.5	52.48	43.008	14.595	57.603	57.603	61.88	50.6415	21.525	72.1665	61.88
		3	13.7	6.5	2.2	0.6	0.2	2.1	19.96	16.464	0.21	16.674	19.96	8.76	7.392	2.205	9.597	8.76
	G - 8	Dasar	15.6	30.8	3.9	9.3	38.7	29.3	24.96	20.0655	40.635	60.7005	60.7005	51.84	41.1285	30.765	71.8935	51.84
		1	42	39.3	13.3	12.4	22.9	26.7	71.68	56.6685	24.045	80.7135	80.7135	67	52.933	28.035	81.018	67
		2	43.2	50.5	13.7	16.1	14	20.1	73.76	58.3055	14.7	73.0065	73.75	86.36	68.2395	21.105	89.3445	86.36
		3	16.5	7.1	4.9	1.4	0.1	1.7	27.64	21.9555	0.105	22.0605	27.64	10.76	8.778	1.785	10.563	10.563
		praktis	0	0	0	0	0	0	0	0	0	0	0	0	0	0	0	0
	G - 9	Dasar	14.8	30.1	4.3	9.4	35.8	27.7	24.64	19.6035	37.59	57.1935	57.1935	51.16	40.488	29.085	69.573	51.16
		1	42.2	39.5	17.7	16.5	23.2	27	78.96	61.0365	24.36	85.3965	85.3965	73.8	57.0675	28.35	85.4175	73.8
		2	22.1	28.7	6.4	8.4	18.6	21.6	36.76	29.253	19.53	48.783	48.783	47.88	38.073	22.68	60.753	47.88
	G - 10	Dasar	14.8	30	4.3	9.5	35.8	27.7	24.64	19.6035	37.59	57.1935	57.1935	51.2	40.4775	29.085	69.5625	51.2
		1	39.9	37.8	13.2	12.2	24.6	28.7	69	54.369	25.83	80.199	80.199	64.88	51.219	30.135	81.354	64.88
		2	22.1	28.7	6.7	8.9	18.6	21.6	37.24	29.5365	19.53	49.0665	49.0665	48.68	38.5455	22.68	61.2255	48.68
	G - 11	Dasar	15.6	31	5.2	12.3	38.7	29.4	27.04	21.294	40.635	61.929	61.929	56.88	44.1735	30.87	75.0435	56.88
		1	39.9	37.8	13.2	12.2	24.6	28.7	69	54.369	25.83	80.199	80.199	64.88	51.219	30.135	81.354	64.88
		2	43.7	50.8	18.1	21.3	22.9	26.7	81.4	62.9895	24.045	87.0345	87.0345	95.04	73.4685	28.035	101.504	95.04
		3	16.6	7.1	6.5	1.8	0.1	1.7	30.32	23.5725	0.105	23.6775	30.32	11.4	9.156	1.785	10.941	10.941
		praktis	0	0	0	0	0	0	0	0	0	0	0	0	0	0	0	0
	G - 12	Dasar	1.2	2.1	0.1	0.4	40.5	30.6	1.6	1.3545	42.525	43.8795	43.8795	3.16	2.583	32.13	34.713	3.16
		1	39.9	37.8	13.2	12.2	24.6	28.7	69	54.369	25.83	80.199	80.199	64.88	51.219	30.135	81.354	64.88
		2	41.6	48.7	13.3	15.8	24.1	28.2	71.2	56.2485	25.305	81.5535	81.5535	83.72	66.066	29.61	95.676	83.72
		3	16	7.1	4.8	1.2	0.2	1.5	26.88	21.336	0.21	21.546	26.88	10.44	8.589	1.575	10.164	10.164

Perhitungan Momen Rencana Kolom Arah y

Portal	Kolom	Lantai	MDx atas (KNm)	MDx bawah (KNm)	MLx atas (KNm)	MLx bawah (KNm)	Mex atas (KNm)	Mex bawah (KNm)	Atas					Bawah				
									1,2MD+1,6ML (KNm)	Mb (KNm)	Ms (KNm)	Mb+Ms (KNm)	M pakai (KNm)	1,2MD+1,6ML (KNm)	Mb (KNm)	Ms (KNm)	Mb+Ms (KNm)	M pakai (KNm)
As A	A - 7	Dasar	20.7	13.4	3.9	1.6	28.7	44.3	31.08	25.4205	30.135	55.5555	55.5555	18.64	15.582	46.515	62.097	18.64
		1	25.9	24.8	5.3	4.8	23.4	27.2	39.56	32.2035	24.57	56.7735	56.7735	37.44	30.576	28.56	59.136	37.44
		2	24	22.7	5.5	6.9	15.64	3.7	37.6	30.3975	16.422	46.8195	46.8195	38.28	30.3555	3.885	34.2405	34.2405
		3	31.3	28.4	1.2	0	1.7	5.2	39.48	33.999	1.785	35.784	39.48	34.08	29.82	5.46	35.28	34.08
	A - 8	Dasar	1.36	2.2	0.2	0.5	55.8	44.4	1.952	1.617	58.59	60.207	60.207	3.44	2.7825	46.62	49.4025	3.44
		1	2.7	1.8	0.6	0.4	41.4	43.7	4.2	3.402	43.47	46.872	46.872	2.8	2.268	45.885	48.153	2.8
		2	8	9.5	2.8	3.4	27.4	35	14.08	11.046	28.77	39.816	39.816	16.84	13.188	36.75	49.938	16.84
		3	8.7	6.4	1	0.5	5.1	6.2	12.04	10.08	5.355	15.435	15.435	8.48	7.1925	6.51	13.7025	8.48
		praktis	46.9	0	0	0	0	0	56.28	49.245	0	49.245	56.28	0	0	0	0	0
	A - 9	Dasar	0.1	0.1	0.2	0	54.6	43.1	0.44	0.294	57.33	57.624	57.624	0.12	0.105	45.255	45.36	0.12
		1	2.2	3	0.8	1	39.1	22.8	3.92	3.066	41.055	44.121	44.121	5.2	4.095	23.94	28.035	5.2
		2	8.5	10.2	3	3.6	27.4	35	15	11.76	28.77	40.53	40.53	18	14.112	36.75	50.862	18
	A - 10	Dasar	0.2	0.3	0	0	54.4	43	0.24	0.21	57.12	57.33	57.33	0.36	0.315	45.15	45.465	0.36
		1	1.8	2.7	0.6	1	39	22.7	3.12	2.457	40.95	43.407	43.407	4.84	3.78	23.835	27.615	4.84
		2	8	9.5	2.8	3.4	27.3	34.8	14.08	11.046	28.665	39.711	39.711	16.84	13.188	36.54	49.728	16.84
	A - 11	Dasar	1.2	2.3	0.1	0.5	55.1	43.8	1.6	1.3545	57.855	59.2095	59.2095	3.56	2.8875	45.99	48.8775	3.56
		1	0.4	1.8	0.6	0.4	41	43.3	1.44	0.987	43.05	44.037	44.037	2.8	2.268	45.465	47.733	2.8
		2	1.8	3.6	0.1	0.2	29	34.7	2.32	1.9845	30.45	32.4345	32.4345	4.64	3.969	36.435	40.404	4.64
		3	8.9	6.4	1	0.4	4.8	5.9	12.28	10.29	5.04	15.33	15.33	8.32	7.098	6.195	13.293	8.32
		praktis	46.9	0	0	0	0	0	56.28	49.245	0	49.245	56.28	0	0	0	0	0
	A - 12	Dasar	13.6	20.5	1.8	3.9	43.3	28	19.2	15.981	45.465	61.446	61.446	30.84	25.2105	29.4	54.6105	30.84
		1	25.7	24.6	5.4	4.8	23.11	26.9	39.48	32.088	24.2655	56.3535	56.3535	37.2	30.366	28.245	58.611	37.2
		2	23.8	22.3	5.6	7	15.15	22.2	37.52	30.282	15.9075	46.1895	46.1895	37.96	30.03	23.31	53.34	37.96
		3	31.3	28.4	1.2	0	2.1	5.4	39.48	33.999	2.205	36.204	39.48	34.08	29.82	5.67	35.49	34.08

Perhitungan Momen Rencana Kolom Arah y

Portal	Kolom	Lantai	MDx atas (KNm)	MDx bawah (KNm)	MLx atas (KNm)	MLx bawah (KNm)	Mex atas (KNm)	Mex bawah (KNm)	Atas					Bawah				
									1,2MD+1,6ML (KNm)	Mb (KNm)	Ms (KNm)	Mb+Ms (KNm)	M pakai (KNm)	1,2MD+1,6ML (KNm)	Mb (KNm)	Ms (KNm)	Mb+Ms (KNm)	M pakai (KNm)
As B	B - 7	Dasar	10.8	21	3.3	7.7	47.7	31.6	18.24	14.4585	50.085	64.5435	64.5435	37.52	29.3265	33.18	62.5065	37.52
		1	34	28.7	9.4	8.4	26.9	31.4	55.84	44.583	28.245	72.828	72.828	47.88	38.073	32.97	71.043	47.88
		2	39.2	39.4	11.3	13.6	15.2	23.4	65.12	51.8385	15.96	67.7985	67.7985	69.04	54.222	24.57	78.792	69.04
		3	29.9	27.9	2.2	0.2	1.7	5	39.4	33.474	1.785	35.259	39.4	33.8	29.484	5.25	34.734	33.8
	B - 8	Dasar	2.5	5.2	0.4	0.8	59.8	47.8	3.64	3.003	62.79	65.793	65.793	7.52	6.216	50.19	56.406	7.52
		1	0.5	0.1	2.2	1.5	46.6	50.1	4.12	2.604	48.93	51.534	51.534	2.52	1.5225	52.605	54.1275	2.52
		2	14.6	14.1	1.1	1.1	30.6	36.6	19.28	16.3695	32.13	48.4995	48.4995	18.68	15.8445	38.43	54.2745	18.68
		3	7.3	6.9	1.6	0.6	4.8	5.8	11.32	9.177	5.04	14.217	14.217	9.24	7.812	6.09	13.902	9.24
		praktis	46.9	0	0	0	0	0	56.28	49.245	0	49.245	56.28	0	0	0	0	0
	B - 9	Dasar	0.5	0.1	0	0.7	59.1	47.7	0.6	0.525	62.055	62.58	62.58	1.24	0.7665	50.085	50.8515	1.24
		1	5.1	20.6	3.9	7.7	40.7	36.5	12.36	9.0405	42.735	51.7755	51.7755	37.04	28.9065	38.325	67.2315	37.04
		2	26.36	34.2	11.7	14.5	13.9	24.4	50.352	38.7345	14.595	53.3295	53.3295	64.24	49.6125	25.62	75.2325	64.24
	B - 10	Dasar	0.2	0.4	0.1	0.6	59	47.7	0.4	0.3045	61.95	62.2545	62.2545	1.44	0.987	50.085	51.072	1.44
		1	4.6	20.3	4	8	40.2	36	11.92	8.61	42.21	50.82	50.82	37.16	28.875	37.8	66.675	37.16
		2	26	33.412	11.9	14.9	14	24.32	50.24	38.5455	14.7	53.2455	53.2455	63.9344	49.1631	25.536	74.6991	63.9344
	B - 11	Dasar	2.6	5.5	0.4	1.1	59.2	47.3	3.76	3.108	62.16	65.268	65.268	8.36	6.8145	49.665	56.4795	8.36
		1	0.4	0.2	2.3	1.8	46.1	49.5	4.16	2.5935	48.405	50.9985	50.9985	3.12	1.911	51.975	53.886	3.12
		2	14.5	13.8	1	1	30.5	36.4	19	16.17	32.025	48.195	48.195	18.16	15.435	38.22	53.655	18.16
		3	7.5	7	1.6	0.6	4.6	5.6	11.56	9.387	4.83	14.217	14.217	9.36	7.917	5.88	13.797	9.36
		praktis	46.9	0	0	0	0	0	56.28	49.245	0	49.245	56.28	0	0	0	0	0
	B - 12	Dasar	10.6	20.4	3.4	7.6	46.8	31	18.16	14.343	49.14	63.483	63.483	36.64	28.602	32.55	61.152	36.64
		1	33.5	28.1	9.5	8.3	26.8	31.2	55.4	44.1525	28.14	72.2925	72.2925	47	37.3485	32.76	70.1085	47
		2	38.5	38.4	11.5	13.7	15.15	23	64.6	51.2925	15.9075	67.2	67.2	68	53.2665	24.15	77.4165	68
		3	29.8	27.8	2.21	0.2	1.82	5	39.296	33.3785	1.911	35.2895	39.296	33.68	29.379	5.25	34.629	33.68

Perhitungan Momen Rencana Kolom Arah y

Portal	Kolom	Lantai	MDx atas (KNm)	MDx bawah (KNm)	MLx atas (KNm)	MLx bawah (KNm)	Mex atas (KNm)	Mex bawah (KNm)	Atas					Bawah				
									1,2MD+1,6ML (KNm)	Mb (KNm)	Ms (KNm)	Mb+Ms (KNm)	M pakai (KNm)	1,2MD+1,6ML (KNm)	Mb (KNm)	Ms (KNm)	Mb+Ms (KNm)	M pakai (KNm)
As C	C - 7	Dasar	10.7	21	3.3	7.8	56.2	40	18.12	14.3535	59.01	73.3635	73.3635	37.68	29.421	42	71.421	37.68
		1	33.9	28.6	9.4	8.5	21.7	28.4	55.72	44.478	22.785	67.263	67.263	47.92	38.0625	29.82	67.8825	47.92
		2	39.1	39.3	11.4	13.7	15.2	22.6	65.16	51.828	15.96	67.788	67.788	69.08	54.2115	23.73	77.9415	69.08
		3	29.9	27.9	2.2	0.2	1.7	4.9	39.4	33.474	1.785	35.259	39.4	33.8	29.484	5.145	34.629	33.8
	C - 8	Dasar	2.6	5.3	0.4	0.8	68.7	56.4	3.76	3.108	72.135	75.243	75.243	7.64	6.321	59.22	65.541	7.64
		1	0.2	0.2	2.3	1.6	42.8	47.6	3.92	2.3835	44.94	47.3235	47.3235	2.8	1.722	49.98	51.702	2.8
		2	14.3	13.7	1	1	29.6	35.3	18.76	15.96	31.08	47.04	47.04	18.04	15.33	37.065	52.395	18.04
		3	7.3	6.9	1.7	0.7	4.7	5.7	11.48	9.2715	4.935	14.2065	14.2065	9.4	7.9065	5.985	13.8915	9.4
		praktis	46.9	0	0	0	0	0	56.28	49.245	0	49.245	56.28	0	0	0	0	0
	C - 9	Dasar	0.5	0.2	0	0.7	67	55.4	0.6	0.525	70.35	70.875	70.875	1.36	0.8715	58.17	59.0415	1.36
		1	5.3	20.7	3.9	7.7	37.7	35.1	12.6	9.2505	39.585	48.8355	48.8355	37.16	29.0115	36.855	65.8665	37.16
		2	26.7	34.4	11.8	14.6	13.3	23.5	50.92	39.186	13.965	53.151	53.151	64.64	49.917	24.675	74.592	64.64
	C - 10	Dasar	0.2	0.4	0.1	0.6	66.5	55.1	0.4	0.3045	69.825	70.1295	70.1295	1.44	0.987	57.855	58.842	1.44
		1	4.7	20.4	3.8	7.9	36.9	34.3	11.72	8.526	38.745	47.271	47.271	37.12	28.8855	36.015	64.9005	37.12
		2	26	33.5	12	14.9	13.8	23.7	50.4	38.64	14.49	53.13	53.13	64.04	49.2555	24.885	74.1405	64.04
	C - 11	Dasar	2.6	5.5	0.4	1.1	66.5	54.4	3.76	3.108	69.825	72.933	72.933	8.36	6.8145	57.12	63.9345	8.36
		1	0.2	0.3	2.3	1.8	43.1	47.6	3.92	2.3835	45.255	47.6385	47.6385	3.24	2.016	49.98	51.996	3.24
		2	14.3	13.6	0.9	0.9	29.6	35.4	18.6	15.8655	31.08	46.9455	46.9455	17.76	15.1305	37.17	52.3005	17.76
		3	7.4	7	1.7	0.7	4.6	5.6	11.6	9.3765	4.83	14.2065	14.2065	9.52	8.0115	5.88	13.8915	9.52
		praktis	46.9	0	0	0	0	0	56.28	49.245	0	49.245	56.28	0	0	0	0	0
	C - 12	Dasar	10.5	20.5	3.4	7.7	53	36.9	18.04	14.238	55.65	69.888	69.888	36.92	28.8015	38.745	67.5465	36.92
		1	33.5	28	9.6	8.4	23.6	29.6	55.56	44.247	24.78	69.027	69.027	47.04	37.338	31.08	68.418	47.04
		2	38.5	38.3	11.6	13.9	144.6	22.4	64.76	51.387	151.83	203.217	203.217	68.2	53.3505	23.52	76.8705	68.2
		3	29.9	27.8	2.2	0.2	1.9	5	39.4	33.474	1.995	35.469	39.4	33.68	29.379	5.25	34.629	33.68

Perhitungan Momen Rencana Kolom Arah y

Portal	Kolom	Lantai	MDx atas (KNm)	MDx bawah (KNm)	MLx atas (KNm)	MLx bawah (KNm)	Mex atas (KNm)	Mex bawah (KNm)	Atas					Bawah				
									1,2MD+1,6ML (KNm)	Mb (KNm)	Ms (KNm)	Mb+Ms (KNm)	M pakai (KNm)	1,2MD+1,6ML (KNm)	Mb (KNm)	Ms (KNm)	Mb+Ms (KNm)	M pakai (KNm)
As D	D - 7	Dasar	11	22.1	3.2	7.4	49.8	33.3	18.32	14.574	52.29	66.864	66.864	38.36	30.198	34.965	65.163	38.36
		1	30.2	28.5	10.2	9.4	26.6	32.2	52.56	41.349	27.93	69.279	69.279	49.24	38.808	33.81	72.618	49.24
		2	27.8	27.5	10.6	13.3	13.7	22.1	50.32	39.207	14.385	53.592	53.592	54.28	41.4435	23.205	64.6485	54.28
		3	32.5	28.6	2.3	0.2	1.8	5	42.68	36.2985	1.89	38.1885	42.68	34.64	30.219	5.25	35.469	34.64
	D - 8	Dasar	1.4	3	0.2	0.7	62.7	50.7	2	1.659	65.835	67.494	67.494	4.72	3.8115	53.235	57.0465	4.72
		1	4	2.9	0.9	0.5	46.2	49.5	6.24	5.0505	48.51	53.5605	53.5605	4.28	3.5175	51.975	55.4925	4.28
		2	3	5	0.3	0.4	27.1	33.4	4.08	3.4335	28.455	31.8885	31.8885	6.64	5.628	35.07	40.698	6.64
		3	8.1	6.6	1.8	0.7	5	5.9	12.6	10.206	5.25	15.456	15.456	9.04	7.5915	6.195	13.7865	9.04
		praktis	46.9	0	0	0	0	0	56.28	49.245	0	49.245	56.28	0	0	0	0	0
	D - 9	Dasar	0.3	0	0.2	0	61.2	49	0.68	0.504	64.26	64.764	64.764	0	0	51.45	51.45	0
		1	2.4	5	0.8	1.6	44.1	47.4	4.16	3.276	46.305	49.581	49.581	8.56	6.762	49.77	56.532	8.56
		2	8.5	9.9	3.1	3.6	26.1	33.7	15.16	11.8545	27.405	39.2595	39.2595	17.64	13.797	35.385	49.182	17.64
	D - 10	Dasar	0	0.3	0	0	61	48.8	0	0	64.05	64.05	64.05	0.36	0.315	51.24	51.555	0.36
		1	1.7	4.4	0.7	1.6	44	47.3	3.16	2.4465	46.2	48.6465	48.6465	7.84	6.132	49.665	55.797	7.84
		2	8.5	9.9	3.1	3.6	26.1	33.8	15.16	11.8545	27.405	39.2595	39.2595	17.64	13.797	35.49	49.287	17.64
	D - 11	Dasar	1.4	3.2	0.2	1	62	50.2	2	1.659	65.1	66.759	66.759	5.44	4.305	52.71	57.015	5.44
		1	4	3.1	1	0.7	45.7	49	6.4	5.145	47.985	53.13	53.13	4.84	3.9165	51.45	55.3665	4.84
		2	3	5	0.4	0.3	27.1	33.4	4.24	3.528	28.455	31.983	31.983	6.48	5.5335	35.07	40.6035	6.48
		3	8.9	6.4	1	0.4	4.8	5.9	12.28	10.29	5.04	15.33	15.33	8.32	7.098	6.195	13.293	8.32
		praktis	46.9	0	0	0	0	0	56.28	49.245	0	49.245	56.28	0	0	0	0	0
	D - 12	Dasar	10.9	21.6	3.3	7.3	49	32.7	18.36	14.5635	51.45	66.0135	66.0135	37.6	29.5785	34.335	63.9135	37.6
		1	29.7	27.8	10.4	9.4	26.3	31.8	52.28	41.013	27.615	68.628	68.628	48.4	38.073	33.39	71.463	48.4
		2	27.1	26.5	10.7	13.3	13.2	21.3	49.64	38.5665	13.86	52.4265	52.4265	53.08	40.3935	22.365	62.7585	53.08
		3	32.5	28.5	2.4	0.2	2.2	5.2	42.84	36.393	2.31	38.703	42.84	34.52	30.114	5.46	35.574	34.52

Perhitungan Momen Rencana Kolom Arah y

Portal	Kolom	Lantai	MDx atas (KNm)	MDx bawah (KNm)	MLx atas (KNm)	MLx bawah (KNm)	Mex atas (KNm)	Mex bawah (KNm)	Atas					Bawah				
									1,2MD+1,6ML (KNm)	Mb (KNm)	Ms (KNm)	Mb+Ms (KNm)	M pakai (KNm)	1,2MD+1,6ML (KNm)	Mb (KNm)	Ms (KNm)	Mb+Ms (KNm)	M pakai (KNm)
As F	F - 7	Dasar	11.1	22	3.2	7.4	48.3	32	18.44	14.679	50.715	65.394	65.394	38.24	30.093	33.6	63.693	38.24
		1	30.1	28.7	10.2	9.4	26.5	31.8	52.44	41.244	27.825	69.069	69.069	49.48	39.018	33.39	72.408	49.48
		2	27.9	27.6	10.7	13.3	13.5	21.7	50.6	39.4065	14.175	53.5815	53.5815	54.4	41.5485	22.785	64.3335	54.4
		3	32	28.1	2.4	0.2	1.9	5	42.24	35.868	1.995	37.863	42.24	34.04	29.694	5.25	34.944	34.04
	F - 8	Dasar	1.1	2.4	0.1	0.5	60.8	49.1	1.48	1.2495	63.84	65.0895	65.0895	3.68	2.9925	51.555	54.5475	3.68
		1	3.5	2.8	0.7	0.4	45.8	48.8	5.32	4.3365	48.09	52.4265	52.4265	4	3.318	51.24	54.558	4
		2	3.4	5.4	0.4	0.4	26.7	33	4.72	3.948	28.035	31.983	31.983	7.12	6.048	34.65	40.698	7.12
		3	7.4	7.2	1.8	0.7	5	5.9	11.76	9.471	5.25	14.721	14.721	9.76	8.2215	6.195	14.4165	9.76
		praktis	46.9	0	0	0	0	0	56.28	49.245	0	49.245	56.28	0	0	0	0	0
	F - 9	Dasar	0.3	0	0.2	0	59.3	47.2	0.68	0.504	62.265	62.769	62.769	0	0	49.56	49.56	0
		1	0.5	0.7	0.2	0.2	44	47.2	0.92	0.714	46.2	46.914	46.914	1.16	0.924	49.56	50.484	1.16
		2	0.9	0.8	0.5	0.6	26.3	33.8	1.88	1.4175	27.615	29.0325	29.0325	1.92	1.407	35.49	36.897	1.92
	F - 10	Dasar	0	0.2	0	0.1	59.1	47.1	0	0	62.055	62.055	62.055	0.4	0.3045	49.455	49.7595	0.4
		1	0	0.3	0.1	0.3	43.9	47.1	0.16	0.0945	46.095	46.1895	46.1895	0.84	0.5985	49.455	50.0535	0.84
		2	0	0	0.4	0.5	26.2	33.6	0.64	0.378	27.51	27.888	27.888	0.8	0.4725	35.28	35.7525	0.8
	F - 11	Dasar	1.1	2.6	0.1	0.7	60.1	48.5	1.48	1.2495	63.105	64.3545	64.3545	4.24	3.3915	50.925	54.3165	4.24
		1	3.6	3	1	0.7	45.5	48.5	5.92	4.725	47.775	52.5	52.5	4.72	3.8115	50.925	54.7365	4.72
		2	3.6	5.7	0.7	0.9	26.3	32.7	5.44	4.4415	27.615	32.0565	32.0565	8.28	6.8355	34.335	41.1705	8.28
		3	7.6	7.2	1.9	0.4	0.7	4.7	12.16	9.7755	0.735	10.5105	12.16	9.28	7.938	4.935	12.873	9.28
		praktis	46.9	0	0	0	0	0	56.28	49.245	0	49.245	56.28	0	0	0	0	0
	F - 12	Dasar	11	21.5	3.3	7.3	47.4	31.4	18.48	14.6685	49.77	64.4385	64.4385	37.48	29.4735	32.97	62.4435	37.48
		1	29.6	28	10.3	9.4	26.4	31.5	52	40.8135	27.72	68.5335	68.5335	48.64	38.283	33.075	71.358	48.64
		2	27.2	26.6	10.7	13.3	13.1	21.1	49.76	38.6715	13.755	52.4265	52.4265	53.2	40.4985	22.155	62.6535	53.2
		3	31.9	28	2.4	0.3	2.2	5.1	42.12	35.763	2.31	38.073	42.12	34.08	29.6835	5.355	35.0385	34.08

Perhitungan Momen Rencana Kolom Arah y

Portal	Kolom	Lantai	MDx atas (KNm)	MDx bawah (KNm)	MLx atas (KNm)	MLx bawah (KNm)	Mex atas (KNm)	Mex bawah (KNm)	Atas					Bawah				
									1,2MD+1,6ML (KNm)	Mb (KNm)	Ms (KNm)	Mb+Ms (KNm)	M pakai (KNm)	1,2MD+1,6ML (KNm)	Mb (KNm)	Ms (KNm)	Mb+Ms (KNm)	M pakai (KNm)
As G	G - 7	Dasar	13.3	20.4	2.5	5.9	48	31.1	19.96	16.3275	50.4	66.7275	66.7275	33.92	26.9955	32.655	59.6505	33.92
		1	26.1	25.8	8.1	7.4	25.7	31.1	44.28	35.0595	26.985	62.0445	62.0445	42.8	34.083	32.655	66.738	42.8
		2	22.6	18.2	8.4	10.6	12.9	21.3	40.56	31.668	13.545	45.213	45.213	38.8	29.127	22.365	51.492	38.8
		3	29.1	27.6	1.9	0.1	1.6	5	37.96	32.3505	1.68	34.0305	37.96	33.28	29.0745	5.25	34.3245	33.28
	G - 8	Dasar	1.36	2.2	0.2	0.5	55.8	44.4	1.952	1.617	58.59	60.207	60.207	3.44	2.7825	46.62	49.4025	3.44
		1	2.7	1.8	0.6	0.4	41.4	43.7	4.2	3.402	43.47	46.872	46.872	2.8	2.268	45.885	48.153	2.8
		2	8	9.5	2.8	3.4	27.4	35	14.08	11.046	28.77	39.816	39.816	16.84	13.188	36.75	49.938	16.84
		3	8.7	6.4	1	0.5	5.1	6.2	12.04	10.08	5.355	15.435	15.435	8.48	7.1925	6.51	13.7025	8.48
		praktis	46.9	1.4	0	0	3.5	5	56.28	49.245	3.675	52.92	56.28	1.68	1.47	5.25	6.72	1.68
	G - 9	Dasar	0.1	0.1	0.2	0	54.6	43.1	0.44	0.294	57.33	57.624	57.624	0.12	0.105	45.255	45.36	0.12
		1	2.2	3	0.8	1	39.1	22.8	3.92	3.066	41.055	44.121	44.121	5.2	4.095	23.94	28.035	5.2
		2	8.5	10.2	3	3.6	27.4	35	15	11.76	28.77	40.53	40.53	18	14.112	36.75	50.862	18
	G - 10	Dasar	0.2	0.3	0	0	54.4	43	0.24	0.21	57.12	57.33	57.33	0.36	0.315	45.15	45.465	0.36
		1	1.8	2.7	0.6	1	39	22.7	3.12	2.457	40.95	43.407	43.407	4.84	3.78	23.835	27.615	4.84
		2	8	9.5	2.8	3.4	27.3	34.8	14.08	11.046	28.665	39.711	39.711	16.84	13.188	36.54	49.728	16.84
	G - 11	Dasar	1.2	2.3	0.1	0.5	55.1	43.8	1.6	1.3545	57.855	59.2095	59.2095	3.56	2.8875	45.99	48.8775	3.56
		1	0.4	1.8	0.6	0.4	41	43.3	1.44	0.987	43.05	44.037	44.037	2.8	2.268	45.465	47.733	2.8
		2	1.8	3.5	0.1	0.2	29	34.7	2.32	1.9845	30.45	32.4345	32.4345	4.64	3.969	36.435	40.404	4.64
		3	8.9	6.4	1	0.4	4.8	5.9	12.28	10.29	5.04	15.33	15.33	8.32	7.098	6.195	13.293	8.32
		praktis	46.9	0	0	0	0	0	56.28	49.245	0	49.245	56.28	0	0	0	0	0
	G - 12	Dasar	13.6	20.5	1.8	3.9	43.3	28	19.2	15.981	45.465	61.446	61.446	30.84	25.2105	29.4	54.6105	30.84
		1	25.7	24.6	5.4	4.8	23.11	26.9	39.48	32.088	24.2655	56.3535	56.3535	37.2	30.366	28.245	58.611	37.2
		2	23.8	22.3	5.6	7	15.15	22.2	37.52	30.282	15.9075	46.1895	46.1895	37.96	30.03	23.31	53.34	37.96
		3	31.3	28.4	1.2	0	2.1	5.4	39.48	33.999	2.205	36.204	39.48	34.08	29.82	5.67	35.49	34.08

LAMPIRAN 7

TABEL PERHITUNGAN KRITERIA KOLOM

Tabel Penentuan Kriteria Kolom (arah y)

Kolom	Lt	b (mm)	h (mm)	Lc (m)	MD (KNm)	ML (KNm)	E (Mpa)	Ic (mm4)	βd	EIc (Nmm2)	Bagian Atas								Bagian Bawah								k	kl/r	Analisis
											Balok kanan			Balok kiri					Balok kanan				Balok kiri						
											Lg (m)	b (mm)	h (mm)	Icr (mm4)	Lg (m)	b (mm)	h (mm)	Icr (mm4)	Lg (m)	b (mm)	h (mm)	Icr (mm4)	Lg (m)	b (mm)	h (mm)	Icr (mm4)			
A - 7	Dasar	400	400	3.4	20.7	3.9	22294	2E+09	0.8	1E+13	5.6	350	550	2E+09	5.6	350	550	2E+09	5.6	350	550	2E+09	5.6	350	550	2E+09	0.5	14	K.pndk
	1	400	400	3.4	25.9	5.3	22294	2E+09	0.8	1E+13	5.6	350	550	2E+09	5.6	350	550	2E+09	5.6	350	550	2E+09	5.6	350	550	2E+09	0.5	14	K.pndk
	2	400	400	3.4	24	6.9	22294	2E+09	0.7	1E+13	5.6	350	550	2E+09	5.6	350	550	2E+09	5.6	350	550	2E+09	5.6	350	550	2E+09	0.5	14	K.pndk
	3	400	400	2.4	31.3	1.2	22294	2E+09	1	1E+13	5.6	350	550	2E+09	5.6	350	550	2E+09	5.6	350	550	2E+09	5.6	350	550	2E+09	0.5	10	K.pndk
A - 8	Dasar	400	400	3.4	2.2	0.5	22294	2E+09	0.8	1E+13	5.6	350	550	2E+09	5.6	350	550	2E+09	5.6	350	550	2E+09	5.6	350	550	2E+09	0.5	14	K.pndk
	1	400	400	3.4	2.7	0.6	22294	2E+09	0.8	1E+13	5.6	350	550	2E+09	5.6	350	550	2E+09	5.6	350	550	2E+09	5.6	350	550	2E+09	0.5	14	K.pndk
	2	400	400	3.4	9.5	3.4	22294	2E+09	0.7	1E+13	5.6	350	550	2E+09	5.6	350	550	2E+09	5.6	350	550	2E+09	5.6	350	550	2E+09	0.5	14	K.pndk
	3	400	400	2.4	8.7	1	22294	2E+09	0.9	1E+13	5.6	350	550	2E+09	5.6	350	550	2E+09	5.6	350	550	2E+09	5.6	350	550	2E+09	0.5	14	K.pndk
	praktis	400	400	2	46.9	0	22294	2E+09	1	1E+13	5.6	350	550	2E+09	5.6	350	550	2E+09	5.6	350	550	2E+09	5.6	350	550	2E+09	0.5	10	K.pndk
A - 9	Dasar	400	400	3.4	0.1	0.2	22294	2E+09	0.3	1E+13	5.6	350	550	2E+09	5.6	350	550	2E+09	5.6	350	550	2E+09	5.6	350	550	2E+09	0.5	8.3	K.pndk
	1	400	400	3.4	3	1	22294	2E+09	0.7	1E+13	5.6	350	550	2E+09	5.6	350	550	2E+09	5.6	350	550	2E+09	5.6	350	550	2E+09	0.5	14	K.pndk
	2	400	400	3.4	10.2	3.6	22294	2E+09	0.7	1E+13	5.6	350	550	2E+09	5.6	350	550	2E+09	5.6	350	550	2E+09	5.6	350	550	2E+09	0.5	14	K.pndk
A - 10	Dasar	400	400	3.4	0.3	0	22294	2E+09	1	1E+13	5.6	350	550	2E+09	5.6	350	550	2E+09	5.6	350	550	2E+09	5.6	350	550	2E+09	0.5	14	K.pndk
	1	400	400	3.4	2.7	1	22294	2E+09	0.7	1E+13	5.6	350	550	2E+09	5.6	350	550	2E+09	5.6	350	550	2E+09	5.6	350	550	2E+09	0.5	14	K.pndk
	2	400	400	3.4	9.5	3.4	22294	2E+09	0.7	1E+13	5.6	350	550	2E+09	5.6	350	550	2E+09	5.6	350	550	2E+09	5.6	350	550	2E+09	0.5	14	K.pndk
A - 11	Dasar	400	400	3.4	2.3	0.5	22294	2E+09	0.8	1E+13	5.6	350	550	2E+09	5.6	350	550	2E+09	5.6	350	550	2E+09	5.6	350	550	2E+09	0.5	14	K.pndk
	1	400	400	3.4	1.8	0.6	22294	2E+09	0.7	1E+13	5.6	350	550	2E+09	5.6	350	550	2E+09	5.6	350	550	2E+09	5.6	350	550	2E+09	0.5	14	K.pndk
	2	400	400	3.4	3.6	0.2	22294	2E+09	0.9	1E+13	5.6	350	550	2E+09	5.6	350	550	2E+09	5.6	350	550	2E+09	5.6	350	550	2E+09	0.5	14	K.pndk
	3	400	400	2.4	8.9	1	22294	2E+09	0.9	1E+13	5.6	350	550	2E+09	5.6	350	550	2E+09	5.6	350	550	2E+09	5.6	350	550	2E+09	0.5	14	K.pndk
	praktis	400	400	2	46.9	0	22294	2E+09	1	1E+13	5.6	350	550	2E+09	5.6	350	550	2E+09	5.6	350	550	2E+09	5.6	350	550	2E+09	0.5	10	K.pndk
A - 12	Dasar	400	400	3.4	20.5	3.9	22294	2E+09	0.8	1E+13	5.6	350	550	2E+09	5.6	350	550	2E+09	5.6	350	550	2E+09	5.6	350	550	2E+09	0.5	8.3	K.pndk
	1	400	400	3.4	25.7	5.4	22294	2E+09	0.8	1E+13	5.6	350	550	2E+09	5.6	350	550	2E+09	5.6	350	550	2E+09	5.6	350	550	2E+09	0.5	14	K.pndk
	2	400	400	3.4	23.8	7	22294	2E+09	0.7	1E+13	5.6	350	550	2E+09	5.6	350	550	2E+09	5.6	350	550	2E+09	5.6	350	550	2E+09	0.5	14	K.pndk
	3	400	400	2.4	31.3	1.2	22294	2E+09	1	1E+13	5.6	350	550	2E+09	5.6	350	550	2E+09	5.6	350	550	2E+09	5.6	350	550	2E+09	0.5	10	K.pndk

Tabel Penentuan Kriteria Kolom (arah y)

Kolom	Lt	b (mm)	h (mm)	Lc (m)	MD (KNm)	ML (KNm)	E (Mpa)	Ic (mm4)	βd	EIc (Nmm2)	Bagian Atas								Bagian Bawah								k	kl/r	Analisis
											ok kanan			Balok kiri					Balok kanan				Balok kiri						
											Lg (m)	b (mm)	h (mm)	Icr (mm4)	Lg (m)	b (mm)	h (mm)	Icr (mm4)	Lg (m)	b (mm)	h (mm)	Icr (mm4)	Lg (m)	b (mm)	h (mm)	Icr (mm4)			
C - 7	Dasar	400	400	3.4	21	7.8	22294	2E+09	0.7	1E+13	5.6	350	550	2E+09	5.6	350	550	2E+09	5.6	350	550	2E+09	5.6	350	550	2E+09	0.5	14	K.pndk
	1	400	400	3.4	33.9	9.4	22294	2E+09	0.7	1E+13	5.6	350	550	2E+09	5.6	350	550	2E+09	5.6	350	550	2E+09	5.6	350	550	2E+09	0.5	14	K.pndk
	2	400	400	3.4	39.3	13.7	22294	2E+09	0.7	1E+13	5.6	350	550	2E+09	5.6	350	550	2E+09	5.6	350	550	2E+09	5.6	350	550	2E+09	0.5	14	K.pndk
	3	400	400	2.4	29.9	2.2	22294	2E+09	0.9	1E+13	5.6	350	550	2E+09	5.6	350	550	2E+09	5.6	350	550	2E+09	5.6	350	550	2E+09	0.5	14	K.pndk
C - 8	Dasar	400	400	3.4	5.3	0.8	22294	2E+09	0.8	1E+13	5.6	350	550	2E+09	5.6	350	550	2E+09	5.6	350	550	2E+09	5.6	350	550	2E+09	0.5	10	K.pndk
	1	400	400	3.4	0.2	2.3	22294	2E+09	0.1	2E+13	5.6	350	550	2E+09	5.6	350	550	2E+09	5.6	350	550	2E+09	5.6	350	550	2E+09	0.5	14	K.pndk
	2	400	400	3.4	14.3	1	22294	2E+09	0.9	1E+13	5.6	350	550	2E+09	5.6	350	550	2E+09	5.6	350	550	2E+09	5.6	350	550	2E+09	0.5	14	K.pndk
	3	400	400	2.4	7.3	1.7	22294	2E+09	0.8	1E+13	5.6	350	550	2E+09	5.6	350	550	2E+09	5.6	350	550	2E+09	5.6	350	550	2E+09	0.5	14	K.pndk
	praktis	400	400	2	46.9	0	22294	2E+09	1	1E+13	5.6	350	550	2E+09	5.6	350	550	2E+09	5.6	350	550	2E+09	5.6	350	550	2E+09	0.5	10	K.pndk
C - 9	Dasar	400	400	3.4	0.5	0.7	22294	2E+09	0.3	1E+13	5.6	350	550	2E+09	5.6	350	550	2E+09	5.6	350	550	2E+09	5.6	350	550	2E+09	0.5	8.3	K.pndk
	1	400	400	3.4	20.7	7.7	22294	2E+09	0.7	1E+13	5.6	350	550	2E+09	5.6	350	550	2E+09	5.6	350	550	2E+09	5.6	350	550	2E+09	0.5	14	K.pndk
	2	400	400	3.4	34.4	14.6	22294	2E+09	0.6	1E+13	5.6	350	550	2E+09	5.6	350	550	2E+09	5.6	350	550	2E+09	5.6	350	550	2E+09	0.5	14	K.pndk
C - 10	Dasar	400	400	3.4	0.4	0.6	22294	2E+09	0.3	1E+13	5.6	350	550	2E+09	5.6	350	550	2E+09	5.6	350	550	2E+09	5.6	350	550	2E+09	0.5	14	K.pndk
	1	400	400	3.4	20.4	7.9	22294	2E+09	0.7	1E+13	5.6	350	550	2E+09	5.6	350	550	2E+09	5.6	350	550	2E+09	5.6	350	550	2E+09	0.5	14	K.pndk
	2	400	400	3.4	33.5	14.9	22294	2E+09	0.6	1E+13	5.6	350	550	2E+09	5.6	350	550	2E+09	5.6	350	550	2E+09	5.6	350	550	2E+09	0.5	14	K.pndk
C - 11	Dasar	400	400	3.4	5.5	1.1	22294	2E+09	0.8	1E+13	5.6	350	550	2E+09	5.6	350	550	2E+09	5.6	350	550	2E+09	5.6	350	550	2E+09	0.5	14	K.pndk
	1	400	400	3.4	0.3	2.3	22294	2E+09	0.1	2E+13	5.6	350	550	2E+09	5.6	350	550	2E+09	5.6	350	550	2E+09	5.6	350	550	2E+09	0.5	14	K.pndk
	2	400	400	3.4	14.3	0.9	22294	2E+09	0.9	1E+13	5.6	350	550	2E+09	5.6	350	550	2E+09	5.6	350	550	2E+09	5.6	350	550	2E+09	0.5	14	K.pndk
	3	400	400	2.4	7.4	1.7	22294	2E+09	0.8	1E+13	5.6	350	550	2E+09	5.6	350	550	2E+09	5.6	350	550	2E+09	5.6	350	550	2E+09	0.5	14	K.pndk
	praktis	400	400	2	46.9	0	22294	2E+09	1	1E+13	5.6	350	550	2E+09	5.6	350	550	2E+09	5.6	350	550	2E+09	5.6	350	550	2E+09	0.5	10	K.pndk
C - 12	Dasar	400	400	3.4	20.5	7.7	22294	2E+09	0.7	1E+13	5.6	350	550	2E+09	5.6	350	550	2E+09	5.6	350	550	2E+09	5.6	350	550	2E+09	0.5	8.3	K.pndk
	1	400	400	3.4	33.5	9.6	22294	2E+09	0.7	1E+13	5.6	350	550	2E+09	5.6	350	550	2E+09	5.6	350	550	2E+09	5.6	350	550	2E+09	0.5	14	K.pndk
	2	400	400	3.4	38.5	13.9	22294	2E+09	0.7	1E+13	5.6	350	550	2E+09	5.6	350	550	2E+09	5.6	350	550	2E+09	5.6	350	550	2E+09	0.5	14	K.pndk
	3	400	400	2.4	29.9	2.2	22294	2E+09	0.9	1E+13	5.6	350	550	2E+09	5.6	350	550	2E+09	5.6	350	550	2E+09	5.6	350	550	2E+09	0.5	14	K.pndk
																											0.5	10	K.pndk

Tabel Penentuan Kriteria Kolom (arah y)

Kolom	Lt	b (mm)	h (mm)	Lc (m)	MD (KNm)	ML (KNm)	E (Mpa)	Ic (mm4)	βd	EIc (Nmm2)	Bagian Atas								Bagian Bawah								k	kl/r	Analisis
											ok kanan			Balok kiri				Balok kanan				Balok kiri						
											Lg (m)	b (mm)	h (mm)	Icr (mm4)	Lg (m)	b (mm)	h (mm)	Icr (mm4)	Lg (m)	b (mm)	h (mm)	Icr (mm4)	Lg (m)	b (mm)	h (mm)	Icr (mm4)			
D - 7	Dasar	400	400	3.4	22.1	7.4	22294	2E+09	0.7	1E+13	5.6	350	550	2E+09	5.6	350	550	2E+09	5.6	350	550	2E+09	5.6	350	550	2E+09	0.5	14	K.pndk
	1	400	400	3.4	30.2	10.2	22294	2E+09	0.7	1E+13	5.6	350	550	2E+09	5.6	350	550	2E+09	5.6	350	550	2E+09	5.6	350	550	2E+09	0.5	14	K.pndk
	2	400	400	3.4	27.8	13.3	22294	2E+09	0.6	1E+13	5.6	350	550	2E+09	5.6	350	550	2E+09	5.6	350	550	2E+09	5.6	350	550	2E+09	0.5	14	K.pndk
	3	400	400	2.4	32.5	2.3	22294	2E+09	0.9	1E+13	5.6	350	550	2E+09	5.6	350	550	2E+09	5.6	350	550	2E+09	5.6	350	550	2E+09	0.5	10	K.pndk
D - 8	Dasar	400	400	3.4	3	0.7	22294	2E+09	0.8	1E+13	5.6	350	550	2E+09	5.6	350	550	2E+09	5.6	350	550	2E+09	5.6	350	550	2E+09	0.5	14	K.pndk
	1	400	400	3.4	4	0.9	22294	2E+09	0.8	1E+13	5.6	350	550	2E+09	5.6	350	550	2E+09	5.6	350	550	2E+09	5.6	350	550	2E+09	0.5	14	K.pndk
	2	400	400	3.4	5	0.4	22294	2E+09	0.9	1E+13	5.6	350	550	2E+09	5.6	350	550	2E+09	5.6	350	550	2E+09	5.6	350	550	2E+09	0.5	14	K.pndk
	3	400	400	2.4	8.1	1.8	22294	2E+09	0.8	1E+13	5.6	350	550	2E+09	5.6	350	550	2E+09	5.6	350	550	2E+09	5.6	350	550	2E+09	0.5	14	K.pndk
	praktis	400	400	2	46.9	0	22294	2E+09	1	1E+13	5.6	350	550	2E+09	5.6	350	550	2E+09	5.6	350	550	2E+09	5.6	350	550	2E+09	0.5	10	K.pndk
D - 9	Dasar	400	400	3.4	0.3	0.2	22294	2E+09	0.5	1E+13	5.6	350	550	2E+09	5.6	350	550	2E+09	5.6	350	550	2E+09	5.6	350	550	2E+09	0.5	8.3	K.pndk
	1	400	400	3.4	5	1.6	22294	2E+09	0.7	1E+13	5.6	350	550	2E+09	5.6	350	550	2E+09	5.6	350	550	2E+09	5.6	350	550	2E+09	0.5	14	K.pndk
	2	400	400	3.4	9.9	3.6	22294	2E+09	0.7	1E+13	5.6	350	550	2E+09	5.6	350	550	2E+09	5.6	350	550	2E+09	5.6	350	550	2E+09	0.5	14	K.pndk
D - 10	Dasar	400	400	3.4	0.3	0	22294	2E+09	1	1E+13	5.6	350	550	2E+09	5.6	350	550	2E+09	5.6	350	550	2E+09	5.6	350	550	2E+09	0.5	14	K.pndk
	1	400	400	3.4	4.4	1.6	22294	2E+09	0.7	1E+13	5.6	350	550	2E+09	5.6	350	550	2E+09	5.6	350	550	2E+09	5.6	350	550	2E+09	0.5	14	K.pndk
	2	400	400	3.4	9.9	3.6	22294	2E+09	0.7	1E+13	5.6	350	550	2E+09	5.6	350	550	2E+09	5.6	350	550	2E+09	5.6	350	550	2E+09	0.5	14	K.pndk
D - 11	Dasar	400	400	3.4	3.2	1	22294	2E+09	0.7	1E+13	5.6	350	550	2E+09	5.6	350	550	2E+09	5.6	350	550	2E+09	5.6	350	550	2E+09	0.5	14	K.pndk
	1	400	400	3.4	4	1	22294	2E+09	0.8	1E+13	5.6	350	550	2E+09	5.6	350	550	2E+09	5.6	350	550	2E+09	5.6	350	550	2E+09	0.5	14	K.pndk
	2	400	400	3.4	5	0.4	22294	2E+09	0.9	1E+13	5.6	350	550	2E+09	5.6	350	550	2E+09	5.6	350	550	2E+09	5.6	350	550	2E+09	0.5	14	K.pndk
	3	400	400	2.4	8.9	1	22294	2E+09	0.9	1E+13	5.6	350	550	2E+09	5.6	350	550	2E+09	5.6	350	550	2E+09	5.6	350	550	2E+09	0.5	14	K.pndk
	praktis	400	400	2	46.9	0	22294	2E+09	1	1E+13	5.6	350	550	2E+09	5.6	350	550	2E+09	5.6	350	550	2E+09	5.6	350	550	2E+09	0.5	10	K.pndk
D - 12	Dasar	400	400	3.4	21.6	7.3	22294	2E+09	0.7	1E+13	5.6	350	550	2E+09	5.6	350	550	2E+09	5.6	350	550	2E+09	5.6	350	550	2E+09	0.5	8.3	K.pndk
	1	400	400	3.4	29.7	10.4	22294	2E+09	0.7	1E+13	5.6	350	550	2E+09	5.6	350	550	2E+09	5.6	350	550	2E+09	5.6	350	550	2E+09	0.5	14	K.pndk
	2	400	400	3.4	27.1	13.3	22294	2E+09	0.6	1E+13	5.6	350	550	2E+09	5.6	350	550	2E+09	5.6	350	550	2E+09	5.6	350	550	2E+09	0.5	14	K.pndk
	3	400	400	2.4	32.5	2.4	22294	2E+09	0.9	1E+13	5.6	350	550	2E+09	5.6	350	550	2E+09	5.6	350	550	2E+09	5.6	350	550	2E+09	0.5	14	K.pndk
																											0.5	10	K.pndk

Tabel Penentuan Kriteria Kolom (arah y)

Kolom	Lt	b (mm)	h (mm)	Lc (m)	MD (KNm)	ML (KNm)	E (Mpa)	Ic (mm4)	βd	EIc (Nmm2)	Bagian Atas								Bagian Bawah								k	kl/r	Analisis
											ok kanan			Balok kiri					Balok kanan				Balok kiri						
											Lg (m)	b (mm)	h (mm)	Icr (mm4)	Lg (m)	b (mm)	h (mm)	Icr (mm4)	Lg (m)	b (mm)	h (mm)	Icr (mm4)	Lg (m)	b (mm)	h (mm)	Icr (mm4)			
E - 7	Desar	400	400	3.4	22	7.4	22294	2E+09	0.7	1E+13	5.6	350	550	2E+09	5.6	350	550	2E+09	5.6	350	550	2E+09	5.6	350	550	2E+09	0.5	14	K.pndk
	1	400	400	3.4	30.1	10.2	22294	2E+09	0.7	1E+13	5.6	350	550	2E+09	5.6	350	550	2E+09	5.6	350	550	2E+09	5.6	350	550	2E+09	0.5	14	K.pndk
	2	400	400	3.4	27.9	13.3	22294	2E+09	0.6	1E+13	5.6	350	550	2E+09	5.6	350	550	2E+09	5.6	350	550	2E+09	5.6	350	550	2E+09	0.5	14	K.pndk
	3	400	400	2.4	32	2.4	22294	2E+09	0.9	1E+13	5.6	350	550	2E+09	5.6	350	550	2E+09	5.6	350	550	2E+09	5.6	350	550	2E+09	0.5	14	K.pndk
E - 8	Desar	400	400	3.4	2.4	0.5	22294	2E+09	0.8	1E+13	5.6	350	550	2E+09	5.6	350	550	2E+09	5.6	350	550	2E+09	5.6	350	550	2E+09	0.5	10	K.pndk
	1	400	400	3.4	3.6	0.8	22294	2E+09	0.8	1E+13	5.6	350	550	2E+09	5.6	350	550	2E+09	5.6	350	550	2E+09	5.6	350	550	2E+09	0.5	14	K.pndk
	2	400	400	3.4	1	26.4	22294	2E+09	0	2E+13	5.6	350	550	2E+09	5.6	350	550	2E+09	5.6	350	550	2E+09	5.6	350	550	2E+09	0.5	14	K.pndk
	3	400	400	2.4	7.3	1.8	22294	2E+09	0.8	1E+13	5.6	350	550	2E+09	5.6	350	550	2E+09	5.6	350	550	2E+09	5.6	350	550	2E+09	0.5	14	K.pndk
	praktis	400	400	2	46.9	0	22294	2E+09	1	1E+13	5.6	350	550	2E+09	5.6	350	550	2E+09	5.6	350	550	2E+09	5.6	350	550	2E+09	0.5	10	K.pndk
E - 9	Desar	400	400	3.4	0.3	0.2	22294	2E+09	0.5	1E+13	5.6	350	550	2E+09	5.6	350	550	2E+09	5.6	350	550	2E+09	5.6	350	550	2E+09	0.5	8.3	K.pndk
	1	400	400	3.4	0.8	0.3	22294	2E+09	0.7	1E+13	5.6	350	550	2E+09	5.6	350	550	2E+09	5.6	350	550	2E+09	5.6	350	550	2E+09	0.5	14	K.pndk
	2	400	400	3.4	1	0.6	22294	2E+09	0.6	1E+13	5.6	350	550	2E+09	5.6	350	550	2E+09	5.6	350	550	2E+09	5.6	350	550	2E+09	0.5	14	K.pndk
E - 10	Desar	400	400	3.4	0.2	0	22294	2E+09	1	1E+13	5.6	350	550	2E+09	5.6	350	550	2E+09	5.6	350	550	2E+09	5.6	350	550	2E+09	0.5	14	K.pndk
	1	400	400	3.4	0.3	0.2	22294	2E+09	0.5	1E+13	5.6	350	550	2E+09	5.6	350	550	2E+09	5.6	350	550	2E+09	5.6	350	550	2E+09	0.5	14	K.pndk
	2	400	400	3.4	0.1	0.5	22294	2E+09	0.1	2E+13	5.6	350	550	2E+09	5.6	350	550	2E+09	5.6	350	550	2E+09	5.6	350	550	2E+09	0.5	14	K.pndk
E - 11	Desar	400	400	3.4	2.7	0.7	22294	2E+09	0.7	1E+13	5.6	350	550	2E+09	5.6	350	550	2E+09	5.6	350	550	2E+09	5.6	350	550	2E+09	0.5	14	K.pndk
	1	400	400	3.4	3.6	0.9	22294	2E+09	0.8	1E+13	5.6	350	550	2E+09	5.6	350	550	2E+09	5.6	350	550	2E+09	5.6	350	550	2E+09	0.5	14	K.pndk
	2	400	400	3.4	5.7	0.8	22294	2E+09	0.8	1E+13	5.6	350	550	2E+09	5.6	350	550	2E+09	5.6	350	550	2E+09	5.6	350	550	2E+09	0.5	14	K.pndk
	3	400	400	2.4	7.4	1.9	22294	2E+09	0.7	1E+13	5.6	350	550	2E+09	5.6	350	550	2E+09	5.6	350	550	2E+09	5.6	350	550	2E+09	0.5	14	K.pndk
	praktis	400	400	2	46.9	0	22294	2E+09	1	1E+13	5.6	350	550	2E+09	5.6	350	550	2E+09	5.6	350	550	2E+09	5.6	350	550	2E+09	0.5	10	K.pndk
E - 12	Desar	400	400	3.4	21.5	7.3	22294	2E+09	0.7	1E+13	5.6	350	550	2E+09	5.6	350	550	2E+09	5.6	350	550	2E+09	5.6	350	550	2E+09	0.5	8.3	K.pndk
	1	400	400	3.4	29.7	10.3	22294	2E+09	0.7	1E+13	5.6	350	550	2E+09	5.6	350	550	2E+09	5.6	350	550	2E+09	5.6	350	550	2E+09	0.5	14	K.pndk
	2	400	400	3.4	27.2	13.3	22294	2E+09	0.6	1E+13	5.6	350	550	2E+09	5.6	350	550	2E+09	5.6	350	550	2E+09	5.6	350	550	2E+09	0.5	14	K.pndk
	3	400	400	2.4	31.9	2.4	22294	2E+09	0.9	1E+13	5.6	350	550	2E+09	5.6	350	550	2E+09	5.6	350	550	2E+09	5.6	350	550	2E+09	0.5	14	K.pndk
																											0.5	10	K.pndk

Tabel Penentuan Kriteria Kolom (arah y)

Kolom	Lt	b (mm)	h (mm)	Lc (m)	MD (KNm)	ML (KNm)	E (Mpa)	Ic (mm4)	βd	EIc (Nmm2)	Bagian Atas								Bagian Bawah								k	kl/r	Analisis
											ok kanan			Balok kiri					Balok kanan				Balok kiri						
											Lg (m)	b (mm)	h (mm)	Icr (mm4)	Lg (m)	b (mm)	h (mm)	Icr (mm4)	Lg (m)	b (mm)	h (mm)	Icr (mm4)	Lg (m)	b (mm)	h (mm)	Icr (mm4)			
F - 7	Dasar	400	400	3.4	22	7.4	22294	2E+09	0.7	1E+13	5.6	350	550	2E+09	5.6	350	550	2E+09	5.6	350	550	2E+09	5.6	350	550	2E+09	0.5	14	K.pndk
	1	400	400	3.4	30.1	10.2	22294	2E+09	0.7	1E+13	5.6	350	550	2E+09	5.6	350	550	2E+09	5.6	350	550	2E+09	5.6	350	550	2E+09	0.5	14	K.pndk
	2	400	400	3.4	27.9	13.3	22294	2E+09	0.6	1E+13	5.6	350	550	2E+09	5.6	350	550	2E+09	5.6	350	550	2E+09	5.6	350	550	2E+09	0.5	14	K.pndk
	3	400	400	2.4	32	2.4	22294	2E+09	0.9	1E+13	5.6	350	550	2E+09	5.6	350	550	2E+09	5.6	350	550	2E+09	5.6	350	550	2E+09	0.5	10	K.pndk
F - 8	Dasar	400	400	3.4	2.4	0.5	22294	2E+09	0.8	1E+13	5.6	350	550	2E+09	5.6	350	550	2E+09	5.6	350	550	2E+09	5.6	350	550	2E+09	0.5	14	K.pndk
	1	400	400	3.4	3.5	0.7	22294	2E+09	0.8	1E+13	5.6	350	550	2E+09	5.6	350	550	2E+09	5.6	350	550	2E+09	5.6	350	550	2E+09	0.5	14	K.pndk
	2	400	400	3.4	5.4	0.4	22294	2E+09	0.9	1E+13	5.6	350	550	2E+09	5.6	350	550	2E+09	5.6	350	550	2E+09	5.6	350	550	2E+09	0.5	14	K.pndk
	3	400	400	2.4	7.4	1.8	22294	2E+09	0.8	1E+13	5.6	350	550	2E+09	5.6	350	550	2E+09	5.6	350	550	2E+09	5.6	350	550	2E+09	0.5	14	K.pndk
	praktis	400	400	2	46.9	0	22294	2E+09	1	1E+13	5.6	350	550	2E+09	5.6	350	550	2E+09	5.6	350	550	2E+09	5.6	350	550	2E+09	0.5	10	K.pndk
F - 9	Dasar	400	400	3.4	0.3	0.2	22294	2E+09	0.5	1E+13	5.6	350	550	2E+09	5.6	350	550	2E+09	5.6	350	550	2E+09	5.6	350	550	2E+09	0.5	8.3	K.pndk
	1	400	400	3.4	0.7	0.2	22294	2E+09	0.7	1E+13	5.6	350	550	2E+09	5.6	350	550	2E+09	5.6	350	550	2E+09	5.6	350	550	2E+09	0.5	14	K.pndk
	2	400	400	3.4	0.9	0.6	22294	2E+09	0.5	1E+13	5.6	350	550	2E+09	5.6	350	550	2E+09	5.6	350	550	2E+09	5.6	350	550	2E+09	0.5	14	K.pndk
F - 10	Dasar	400	400	3.4	0.2	0.1	22294	2E+09	0.6	1E+13	5.6	350	550	2E+09	5.6	350	550	2E+09	5.6	350	550	2E+09	5.6	350	550	2E+09	0.5	14	K.pndk
	1	400	400	3.4	0.3	0.3	22294	2E+09	0.4	1E+13	5.6	350	550	2E+09	5.6	350	550	2E+09	5.6	350	550	2E+09	5.6	350	550	2E+09	0.5	14	K.pndk
	2	400	400	3.4	0	0.5	22294	2E+09	0	2E+13	5.6	350	550	2E+09	5.6	350	550	2E+09	5.6	350	550	2E+09	5.6	350	550	2E+09	0.5	14	K.pndk
F - 11	Dasar	400	400	3.4	2.6	0.7	22294	2E+09	0.7	1E+13	5.6	350	550	2E+09	5.6	350	550	2E+09	5.6	350	550	2E+09	5.6	350	550	2E+09	0.5	14	K.pndk
	1	400	400	3.4	3.6	1	22294	2E+09	0.7	1E+13	5.6	350	550	2E+09	5.6	350	550	2E+09	5.6	350	550	2E+09	5.6	350	550	2E+09	0.5	14	K.pndk
	2	400	400	3.4	5.7	0.9	22294	2E+09	0.8	1E+13	5.6	350	550	2E+09	5.6	350	550	2E+09	5.6	350	550	2E+09	5.6	350	550	2E+09	0.5	14	K.pndk
	3	400	400	2.4	7.6	1.9	22294	2E+09	0.8	1E+13	5.6	350	550	2E+09	5.6	350	550	2E+09	5.6	350	550	2E+09	5.6	350	550	2E+09	0.5	14	K.pndk
	praktis	400	400	2	46.9	0	22294	2E+09	1	1E+13	5.6	350	550	2E+09	5.6	350	550	2E+09	5.6	350	550	2E+09	5.6	350	550	2E+09	0.5	10	K.pndk
F - 12	Dasar	400	400	3.4	21.5	7.3	22294	2E+09	0.7	1E+13	5.6	350	550	2E+09	5.6	350	550	2E+09	5.6	350	550	2E+09	5.6	350	550	2E+09	0.5	8.3	K.pndk
	1	400	400	3.4	29.6	10.3	22294	2E+09	0.7	1E+13	5.6	350	550	2E+09	5.6	350	550	2E+09	5.6	350	550	2E+09	5.6	350	550	2E+09	0.5	14	K.pndk
	2	400	400	3.4	27.2	13.3	22294	2E+09	0.6	1E+13	5.6	350	550	2E+09	5.6	350	550	2E+09	5.6	350	550	2E+09	5.6	350	550	2E+09	0.5	14	K.pndk
	3	400	400	2.4	31.9	2.4	22294	2E+09	0.9	1E+13	5.6	350	550	2E+09	5.6	350	550	2E+09	5.6	350	550	2E+09	5.6	350	550	2E+09	0.5	14	K.pndk
																											0.5	10	K.pndk

Tabel Penentuan Kriteria Kolom (arah y)

Kolom	Lt	b (mm)	h (mm)	Lc (m)	MD (KNm)	ML (KNm)	E (Mpa)	Ic (mm4)	βd	EIc (Nmm2)	Bagian Atas								Bagian Bawah								k	kl/r	Analisis
											ok kanan			Balok kiri					Balok kanan				Balok kiri						
											Lg (m)	b (mm)	h (mm)	Icr (mm4)	Lg (m)	b (mm)	h (mm)	Icr (mm4)	Lg (m)	b (mm)	h (mm)	Icr (mm4)	Lg (m)	b (mm)	h (mm)	Icr (mm4)			
G - 7	Dasar	400	400	3.4	20.4	5.9	22294	2E+09	0.7	1E+13	5.6	350	550	2E+09	5.6	350	550	2E+09	5.6	350	550	2E+09	5.6	350	550	2E+09	0.5	14	K.pndk
	1	400	400	3.4	26.1	8.1	22294	2E+09	0.7	1E+13	5.6	350	550	2E+09	5.6	350	550	2E+09	5.6	350	550	2E+09	5.6	350	550	2E+09	0.5	14	K.pndk
	2	400	400	3.4	22.6	10.6	22294	2E+09	0.6	1E+13	5.6	350	550	2E+09	5.6	350	550	2E+09	5.6	350	550	2E+09	5.6	350	550	2E+09	0.5	14	K.pndk
	3	400	400	2.4	29.1	1.9	22294	2E+09	0.9	1E+13	5.6	350	550	2E+09	5.6	350	550	2E+09	5.6	350	550	2E+09	5.6	350	550	2E+09	0.5	10	K.pndk
G - 8	Dasar	400	400	3.4	2.2	0.5	22294	2E+09	0.8	1E+13	5.6	350	550	2E+09	5.6	350	550	2E+09	5.6	350	550	2E+09	5.6	350	550	2E+09	0.5	14	K.pndk
	1	400	400	3.4	2.7	0.6	22294	2E+09	0.8	1E+13	5.6	350	550	2E+09	5.6	350	550	2E+09	5.6	350	550	2E+09	5.6	350	550	2E+09	0.5	14	K.pndk
	2	400	400	3.4	9.5	3.4	22294	2E+09	0.7	1E+13	5.6	350	550	2E+09	5.6	350	550	2E+09	5.6	350	550	2E+09	5.6	350	550	2E+09	0.5	14	K.pndk
	3	400	400	2.4	8.7	1	22294	2E+09	0.9	1E+13	5.6	350	550	2E+09	5.6	350	550	2E+09	5.6	350	550	2E+09	5.6	350	550	2E+09	0.5	14	K.pndk
	praktis	400	400	2	46.9	0	22294	2E+09	1	1E+13	5.6	350	550	2E+09	5.6	350	550	2E+09	5.6	350	550	2E+09	5.6	350	550	2E+09	0.5	10	K.pndk
G - 9	Dasar	400	400	3.4	0.1	0.2	22294	2E+09	0.3	1E+13	5.6	350	550	2E+09	5.6	350	550	2E+09	5.6	350	550	2E+09	5.6	350	550	2E+09	0.5	8.3	K.pndk
	1	400	400	3.4	3	1	22294	2E+09	0.7	1E+13	5.6	350	550	2E+09	5.6	350	550	2E+09	5.6	350	550	2E+09	5.6	350	550	2E+09	0.5	14	K.pndk
	2	400	400	3.4	10.2	3.6	22294	2E+09	0.7	1E+13	5.6	350	550	2E+09	5.6	350	550	2E+09	5.6	350	550	2E+09	5.6	350	550	2E+09	0.5	14	K.pndk
G - 10	Dasar	400	400	3.4	0.3	0	22294	2E+09	1	1E+13	5.6	350	550	2E+09	5.6	350	550	2E+09	5.6	350	550	2E+09	5.6	350	550	2E+09	0.5	14	K.pndk
	1	400	400	3.4	2.7	1	22294	2E+09	0.7	1E+13	5.6	350	550	2E+09	5.6	350	550	2E+09	5.6	350	550	2E+09	5.6	350	550	2E+09	0.5	14	K.pndk
	2	400	400	3.4	9.5	3.4	22294	2E+09	0.7	1E+13	5.6	350	550	2E+09	5.6	350	550	2E+09	5.6	350	550	2E+09	5.6	350	550	2E+09	0.5	14	K.pndk
G - 11	Dasar	400	400	3.4	2.3	0.5	22294	2E+09	0.8	1E+13	5.6	350	550	2E+09	5.6	350	550	2E+09	5.6	350	550	2E+09	5.6	350	550	2E+09	0.5	14	K.pndk
	1	400	400	3.4	1.8	0.6	22294	2E+09	0.7	1E+13	5.6	350	550	2E+09	5.6	350	550	2E+09	5.6	350	550	2E+09	5.6	350	550	2E+09	0.5	14	K.pndk
	2	400	400	3.4	3.6	0.2	22294	2E+09	0.9	1E+13	5.6	350	550	2E+09	5.6	350	550	2E+09	5.6	350	550	2E+09	5.6	350	550	2E+09	0.5	14	K.pndk
	3	400	400	2.4	8.9	1	22294	2E+09	0.9	1E+13	5.6	350	550	2E+09	5.6	350	550	2E+09	5.6	350	550	2E+09	5.6	350	550	2E+09	0.5	14	K.pndk
	praktis	400	400	2	46.9	0	22294	2E+09	1	1E+13	5.6	350	550	2E+09	5.6	350	550	2E+09	5.6	350	550	2E+09	5.6	350	550	2E+09	0.5	10	K.pndk
G - 12	Dasar	400	400	3.4	20.5	3.9	22294	2E+09	0.8	1E+13	5.6	350	550	2E+09	5.6	350	550	2E+09	5.6	350	550	2E+09	5.6	350	550	2E+09	0.5	8.3	K.pndk
	1	400	400	3.4	25.7	5.4	22294	2E+09	0.8	1E+13	5.6	350	550	2E+09	5.6	350	550	2E+09	5.6	350	550	2E+09	5.6	350	550	2E+09	0.5	14	K.pndk
	2	400	400	3.4	23.8	7	22294	2E+09	0.7	1E+13	5.6	350	550	2E+09	5.6	350	550	2E+09	5.6	350	550	2E+09	5.6	350	550	2E+09	0.5	14	K.pndk
	3	400	400	2.4	31.3	1.2	22294	2E+09	1	1E+13	5.6	350	550	2E+09	5.6	350	550	2E+09	5.6	350	550	2E+09	5.6	350	550	2E+09	0.5	14	K.pndk
																											0.5	10	K.pndk

LAMPIRAN 8

TABEL PERHITUNGAN *Mu* KOLOM

Perhitungan Mu arah Y

Portal	Kolom	Lt	h (m)	hn (m)	kiri	kanan	kiri	kanan	kiri	kanan	atas	bawah	PD (KN)	PL (KN)	Pu,k (KN)	α ka	α kb	atas	bawah
As A	A - 7 /	Dasar	4	3.4	0	195.8	0	6	0	5.6	28.7	44.3	442.80	50.40	546	0.3932	0.6068	85	131
	A - 12	1	4	3.4	0	195.8	0	6	0	5.6	23.4	27.2	309.80	33.70	389	0.4625	0.5375	130	151
		2	4	3.4	0	237.8	0	6	0	5.6	15.64	3.7	174.40	16.30	235	0.8087	0.1913	276	65
		3	2.8	2.4	0	90.9	0	6	0	5.6	1.7	5.2	40.20	0.00	55	0.2464	0.7536	24	75
	A - 8 /	Dasar	4	3.4	0	237.8	0	6	0	5.6	55.8	44.4	642.80	111.70	827	0.5569	0.4431	146	116
	A - 11	1	4	3.4	0	237.8	0	6	0	5.6	41.4	43.7	448.00	75.30	584	0.4865	0.5135	166	175
		2	4	3.4	0	317.6	0	6	0	5.6	27.4	35	250.30	37.80	349	0.4391	0.5609	200	255
		3	2.8	2.4	0	90.9	0	6	0	5.6	5.1	6.2	56.50	0.50	73	0.4513	0.5487	45	55
		praktis	2.2	2	0	90.9	0	6	0	5.6	0.01	0.01	53.10	0.00	69	0.5	0.5	47	47
	A - 9 /	Dasar	4	3.4	0	237.8	0	6	0	5.6	54.6	43.1	504.90	80.50	649	0.5589	0.4411	191	150
	A - 10	1	4	3.4	0	160.1	0	6	0	5.6	39.1	22.8	315.10	45.20	402	0.6317	0.3683	145	85
		2	4	3.4	0	160.1	0	6	0	5.6	27.4	35	154.40	22.70	209	0.4391	0.5609	78	99
As B	B - 7 /	Dasar	4	3.4	195.8	195.8	6	6	5.6	5.6	47.7	31.6	684.70	108.80	890	0.6015	0.3985	260	172
	B - 12	1	4	3.4	195.8	195.8	6	6	5.6	5.6	23.9	24.6	473.60	72.40	630	0.5223	0.4777	293	268
		2	4	3.4	237.8	160.1	6	6	5.6	5.6	15.2	23.4	260.70	35.80	369	0.3938	0.6062	225	346
		3	2.8	2.4	90.9	90.9	6	6	5.6	5.6	1.7	5	44.00	0.30	73	0.2537	0.7463	50	148
	B - 8 /	Dasar	4	3.4	237.8	237.8	6	6	5.6	5.6	59.8	47.8	902.90	239.60	1269	0.5558	0.4442	292	233
	B - 11	1	4	3.4	237.8	160.1	6	6	5.6	5.6	43.6	44.3	626.40	161.10	885	0.5127	0.4873	292	278
		2	4	3.4	317.6	160.1	6	6	5.6	5.6	15.2	16	260.70	82.10	430	0.4872	0.5128	334	351
		3	2.8	2.4	90.9	90.9	6	6	5.6	5.6	4.8	5.8	60.50	0.40	90	0.4528	0.5472	90	109
		praktis	2.2	2	90.9	90.9	6	6	5.6	5.6	0.01	0.01	53.10	0.00	82	0.5	0.5	94	94
	B - 9 /	Dasar	4	3.4	237.8	237.8	6	6	5.6	5.6	59.1	47.7	565.90	148.60	820	0.5534	0.4466	377	305
	B - 10	1	4	3.4	160.1	116.5	6	6	5.6	5.6	40.7	36.5	292.40	70.50	421	0.5272	0.4728	209	188
		2	4	3.4	160.1	116.5	6	6	5.6	5.6	13.9	24.4	146.60	35.50	232	0.3629	0.6371	111	194
As C	C - 7 /	Dasar	4	3.4	195.8	195.8	6	6	5.6	5.6	55.2	40	667.60	105.90	869	0.5842	0.4158	252	180
	C - 12	1	4	3.4	237.8	160.1	6	6	5.6	5.6	21.7	28.4	462.90	70.70	618	0.4331	0.5669	247	323
		2	4	3.4	160.1	160.1	6	6	5.6	5.6	15.2	22.6	253.80	34.70	350	0.4021	0.5979	185	274
		3	2.8	2.4	90.9	90.9	6	6	5.6	5.6	1.7	4.9	44.80	0.00	74	0.2576	0.7424	51	148
	C - 8 /	Dasar	4	3.4	237.8	237.8	6	6	5.6	5.6	68.7	56.4	880.70	234.50	1240	0.5492	0.4508	288	236
	C - 11	1	4	3.4	237.8	237.8	6	6	5.6	5.6	42.8	47.6	612.70	158.30	879	0.4735	0.5265	323	359
		2	4	3.4	237.8	237.8	6	6	5.6	5.6	29.6	35.3	337.90	80.30	508	0.4561	0.5439	311	371
		3	2.8	2.4	90.9	90.9	6	6	5.6	5.6	4.7	5.7	61.40	0.20	91	0.4519	0.5481	90	109
		praktis	2.2	2	90.9	90.9	6	6	5.6	5.6	0.01	0.01	53.10	0.00	82	0.5	0.5	94	94
	C - 9 /	Dasar	4	3.4	237.8	237.8	6	6	5.6	5.6	67	55.4	554.30	143.10	802	0.5474	0.4526	373	309
	C - 10	1	4	3.4	116.5	160.1	6	6	5.6	5.6	37.7	35.1	278.20	67.30	403	0.5179	0.4821	205	191
		2	4	3.4	116.5	160.1	6	6	5.6	5.6	13.3	23.5	136.40	32.80	218	0.3614	0.6386	110	195

Perhitungan Mu arah Y

Portal	Kolom	Lt	h (m)	hn (m)	kiri	kanan	kiri	kanan	kiri	kanan	atas	bawah	PD (KN)	PL (KN)	Pu,k (KN)	α ka	α kb	atas	bawah
As D	D - 7 /	Dasar	4	3.4	195.8	195.8	6	6	5.6	5.6	49.8	33.3	667.60	105.90	869	0.5993	0.4007	259	173
	D - 12	1	4	3.4	160.1	160.1	6	6	5.6	5.6	26.6	32.2	462.90	70.70	607	0.4524	0.5476	208	251
		2	4	3.4	160.1	160.1	6	6	5.6	5.6	13.7	22.1	253.80	34.70	350	0.3827	0.6173	176	283
		3	2.8	2.4	90.9	90.9	6	6	5.6	5.6	1.8	5	44.80	0.00	74	0.2647	0.7353	53	146
	D - 8 /	Dasar	4	3.4	237.8	237.8	6	6	5.6	5.6	62.7	50.7	880.70	234.50	1240	0.5529	0.4471	290	235
	D - 11	1	4	3.4	237.8	237.8	6	6	5.6	5.6	46.2	49.5	612.70	158.30	879	0.4828	0.5172	329	353
		2	4	3.4	237.8	237.8	6	6	5.6	5.6	27.1	33.4	337.90	80.30	508	0.4479	0.5521	305	376
		3	2.8	2.4	90.9	90.9	6	6	5.6	5.6	5	5.9	61.40	0.20	91	0.4587	0.5413	91	108
		praktis	2.2	2	90.9	90.9	6	6	5.6	5.6	0.01	0.01	53.10	0.00	82	0.5	0.5	94	94
	D - 9 /	Dasar	4	3.4	237.8	237.8	6	6	5.6	5.6	61.2	49	554.30	143.10	802	0.5554	0.4446	379	303
	D - 10	1	4	3.4	160.1	237.8	6	6	5.6	5.6	44.1	47.4	278.20	67.30	421	0.482	0.518	275	296
		2	4	3.4	160.1	237.8	6	6	5.6	5.6	26.1	33.7	136.40	32.80	236	0.4365	0.5635	192	247
As E	E - 7 /	Dasar	4	3.4	195.8	195.8	6	6	5.6	5.6	48.5	32.2	676.80	109.40	883	0.601	0.399	260	172
	E - 12	1	4	3.4	160.1	160.1	6	6	5.6	5.6	26.6	31.9	467.00	72.80	613	0.4547	0.5453	209	250
		2	4	3.4	160.1	160.1	6	6	5.6	5.6	13.5	21.8	257.90	36.00	355	0.3824	0.6176	176	284
		3	2.8	2.4	90.9	90.9	6	6	5.6	5.6	1.9	5	43.90	0.30	73	0.2754	0.7246	55	144
	E - 8 /	Dasar	4	3.4	237.8	237.8	6	6	5.6	5.6	61.1	49.3	891.00	237.10	1254	0.5534	0.4466	290	234
	E - 11	1	4	3.4	237.8	237.8	6	6	5.6	5.6	45.9	49	611.80	157.50	877	0.4837	0.5163	330	352
		2	4	3.4	237.8	237.8	6	6	5.6	5.6	33.8	35	337.60	79.90	508	0.4913	0.5087	335	347
		3	2.8	2.4	90.9	90.9	6	6	5.6	5.6	5	5.9	60.50	0.30	90	0.4587	0.5413	91	108
		praktis	2.2	2	90.9	90.9	6	6	5.6	5.6	0.1	0.1	53.10	0.00	82	0.5	0.5	94	94
	E - 9 /	Dasar	4	3.4	237.8	237.8	6	6	5.6	5.6	59.6	47.5	813.90	231.30	1167	0.5565	0.4435	379	302
	E - 10	1	4	3.4	160.1	237.8	6	6	5.6	5.6	44.1	47.4	542.70	154.10	790	0.482	0.518	275	296
		2	4	3.4	160.1	237.8	6	6	5.6	5.6	26.4	33.8	274.20	78.00	428	0.4385	0.5615	192	246
As F	F - 7 /	Dasar	4	3.4	195.8	195.8	6	6	5.6	5.6	48.3	32	676.80	109.40	883	0.6015	0.3985	260	172
	F - 12	1	4	3.4	160.1	160.1	6	6	5.6	5.6	26.5	31.8	467.00	72.80	613	0.4545	0.5455	209	250
		2	4	3.4	160.1	195.8	6	6	5.6	5.6	13.5	21.7	257.90	36.00	360	0.3835	0.6165	196	315
		3	2.8	2.4	90.9	90.9	6	6	5.6	5.6	1.9	5	43.90	0.30	73	0.2754	0.7246	55	144
	F - 8 /	Dasar	4	3.4	237.8	317.6	6	6	5.6	5.6	60.8	49.1	891.00	237.10	1266	0.5532	0.4468	339	274
	F - 11	1	4	3.4	237.8	237.8	6	6	5.6	5.6	45.8	48.8	611.80	157.50	877	0.4841	0.5159	330	352
		2	4	3.4	237.8	317.6	6	6	5.6	5.6	26.7	33	337.60	79.90	519	0.4472	0.5528	356	440
		3	2.8	2.4	90.9	90.9	6	6	5.6	5.6	5	5.9	60.50	0.30	90	0.4587	0.5413	91	108
		praktis	2.2	2	90.9	90.9	6	6	5.6	5.6	0.01	0.01	53.10	0.00	82	0.5	0.5	94	94
	F - 9 /	Dasar	4	3.4	237.8	237.8	6	6	5.6	5.6	59.3	47.2	813.90	231.30	1167	0.5568	0.4432	380	302
	F - 10	1	4	3.4	237.8	237.8	6	6	5.6	5.6	44	47.2	542.70	154.10	801	0.4825	0.5175	329	353
		2	4	3.4	237.8	237.8	6	6	5.6	5.6	26.3	33.8	274.20	78.00	439	0.4376	0.5624	230	295

Perhitungan Mu arah Y

Portal	Kolom	Lt	h (m)	hn (m)	kiri	kanan	kiri	kanan	kiri	kanan	atas	bawah	PD (KN)	PL (KN)	Pu,k (KN)	α ka	α kb	atas	bawah
As G	G - 7 /	Dasar	4	3.4	195.8	0	6	0	5.6	0	48.3	32	676.80	109.40	854	0.6015	0.3985	130	86
	G - 12	1	4	3.4	160.1	0	6	0	5.6	0	26.5	31.8	467.00	72.80	590	0.4545	0.5455	104	125
		2	4	3.4	195.8	0	6	0	5.6	0	13.5	21.7	257.90	36.00	337	0.3835	0.6165	108	173
		3	2.8	2.4	90.9	0	6	0	5.6	0	1.9	5	43.90	0.30	60	0.2754	0.7246	27	72
	G - 8 /	Dasar	4	3.4	317.6	0	6	0	5.6	0	60.8	49.1	891.00	237.10	1231	0.5532	0.4468	194	157
	G - 11	1	4	3.4	237.8	0	6	0	5.6	0	45.8	48.8	611.80	157.50	842	0.4841	0.5159	165	176
		2	4	3.4	317.6	0	6	0	5.6	0	26.7	33	337.60	79.90	485	0.4472	0.5528	204	252
		3	2.8	2.4	90.9	0	6	0	5.6	0	5	5.9	60.50	0.30	77	0.4587	0.5413	46	54
		praktis	2.2	2	90.9	0	6	0	5.6	0	0.01	0.01	53.10	0.00	69	0.5	0.5	47	47
	G - 9 /	Dasar	4	3.4	237.8	0	6	0	5.6	0	59.3	47.2	813.90	231.30	1132	0.5568	0.4432	190	151
	G - 10	1	4	3.4	237.8	0	6	0	5.6	0	44	47.2	542.70	154.10	766	0.4825	0.5175	164	176
		2	4	3.4	237.8	0	6	0	5.6	0	26.3	33.8	274.20	78.00	404	0.4376	0.5624	115	148

Perhitungan Mu arah X

Portal	Kolom	Lt	h (m)	hn (m	kiri	kanan	kiri	kanan	kiri	kanan	atas	bawah	PD (KN)	PL (KN)	Pu,k (KN)	α ka	α kb	atas	bawah
As A	A - 7 /	Dasar	4.0	3.4	-	123.9	-	5.0	-	4.6	40.5	30.6	442.6	50.4	539.3	0.6	0.4	78.9	59.7
	A - 12	1	4.0	3.4	-	123.9	-	5.0	-	4.6	24.1	28.2	309.8	33.7	382.4	0.5	0.5	83.0	97.2
		2	4.0	3.4	-	90.9	-	5.0	-	4.6	13.9	20.5	174.4	16.3	216.1	0.4	0.6	53.4	78.8
		3	2.8	2.4		90.9	-	5.0	-	4.6	0.2	2.1	40.2	-	58.1	0.1	0.9	8.8	92.1
	A - 8 /	Dasar	4.0	3.4	123.9	123.9	5.0	5.0	4.6	4.6	38.7	29.3	642.8	111.7	835.6	0.6	0.4	157.8	119.5
	A - 11	1	4.0	3.4	123.9	123.9	5.0	5.0	4.6	4.6	22.9	26.7	448.0	75.3	592.8	0.5	0.5	166.4	194.0
		2	4.0	3.4	90.9	90.9	5.0	5.0	4.6	4.6	14.0	20.1	250.3	37.8	334.3	0.4	0.6	108.6	155.9
		3	2.8	2.4	90.9	90.9	5.0	5.0	4.6	4.6	0.1	1.7	56.5	0.5	91.7	0.1	0.9	11.2	190.5
		praktis	2.2	2.0	90.9	90.9	5.0	5.0	4.6	4.6	0.0	0.0	53.1	-	87.6	0.5	0.5	95.1	95.1
	A - 9 /	Dasar	4.0	3.4	123.9	123.9	5.0	5.0	4.6	4.6	35.8	27.7	504.9	80.5	658.0	0.6	0.4	203.2	157.2
	A - 10	1	4.0	3.4	123.9	123.9	5.0	5.0	4.6	4.6	23.2	27.0	315.1	45.2	421.7	0.5	0.5	166.6	193.9
		2	4.0	3.4	90.9	123.9	5.0	5.0	4.6	4.6	18.6	21.6	154.4	22.7	223.5	0.5	0.5	111.2	129.1
As B	B - 7 /	Dasar	4.0	3.4	-	123.9	-	5.0	-	4.6	40.5	30.6	684.7	108.8	854.9	0.6	0.4	78.9	59.7
	B - 12	1	4.0	3.4	-	123.9	-	5.0	-	4.6	24.1	28.2	473.6	72.4	595.0	0.5	0.5	83.0	97.2
		2	4.0	3.4	-	90.9	-	5.0	-	4.6	13.9	20.5	260.7	35.8	327.2	0.4	0.6	53.4	78.8
		3	2.8	2.4	-	90.9	-	5.0	-	4.6	0.2	2.1	44.0	0.3	62.4	0.1	0.9	8.8	92.1
	B - 8 /	Dasar	4.0	3.4	123.9	123.9	5.0	5.0	4.6	4.6	38.7	29.3	902.9	239.6	1,243.0	0.6	0.4	157.8	119.5
	B - 11	1	4.0	3.4	123.9	123.9	5.0	5.0	4.6	4.6	22.9	26.7	626.4	161.1	870.2	0.5	0.5	166.4	194.0
		2	4.0	3.4	90.9	90.9	5.0	5.0	4.6	4.6	14.0	20.1	346.7	82.1	482.1	0.4	0.6	108.6	155.9
		3	2.8	2.4	90.9	90.9	5.0	5.0	4.6	4.6	0.1	1.7	60.5	0.4	95.8	0.1	0.9	11.2	190.5
		praktis	2.2	2.0	90.9	90.9	5.0	5.0	4.6	4.6	0.0	0.0	53.1	-	87.6	0.5	0.5	95.1	95.1
	B - 9 /	Dasar	4.0	3.4	123.9	-	5.0	-	4.6	-	35.8	27.7	565.9	148.6	771.9	0.6	0.4	101.6	78.6
	B - 10	1	4.0	3.4	123.9	-	5.0	-	4.6	-	23.2	27.0	292.4	70.5	402.7	0.5	0.5	83.3	96.9
		2	4.0	3.4	90.9	-	5.0	-	4.6	-	18.6	21.6	146.6	35.5	207.1	0.5	0.5	47.1	54.7
As C	C - 7 /	Dasar	4.0	3.4	-	123.9	5.0	5.0	4.6	4.6	51.3	44.9	667.60	105.90	833.9	0.5	0.5	73.9	64.7
	C - 12	1	4.0	3.4	-	123.9	5.0	5.0	4.6	4.6	24.0	28.5	462.90	70.70	582.0	0.5	0.5	82.4	97.8
		2	4.0	3.4	-	90.9	5.0	5.0	4.6	4.6	25.2	29.6	253.80	34.70	318.8	0.5	0.5	60.8	71.4
		3	2.8	2.4	-	90.9	5.0	5.0	4.6	4.6	2.9	3.6	44.80	0.00	62.9	0.4	0.6	45.0	55.9
	C - 8 /	Dasar	4.0	3.4	123.9	123.9	5.0	5.0	4.6	4.6	49.2	43.0	880.70	234.50	1,214.3	0.5	0.5	148.0	129.3
	C - 11	1	4.0	3.4	123.9	123.9	5.0	5.0	4.6	4.6	37.7	40.0	612.70	158.30	852.9	0.5	0.5	174.9	185.6
		2	4.0	3.4	90.9	90.9	5.0	5.0	4.6	4.6	23.8	28.0	337.90	80.30	470.9	0.5	0.5	121.5	142.9
		3	2.8	2.4	90.9	90.9	5.0	5.0	4.6	4.6	3.3	3.8	61.40	0.20	96.5	0.5	0.5	93.8	108.0
		praktis	2.2	2.0	90.9	90.9	5.0	5.0	4.6	4.6	0.0	0.0	53.10	0.00	87.6	0.5	0.5	95.1	95.1
	C - 9 /	Dasar	4.0	3.4	123.9	-	5.0	-	4.6	-	45.9	40.6	554.30	143.10	754.0	0.5	0.5	95.6	84.6
	C - 10	1	4.0	3.4	123.9	-	5.0	-	4.6	-	30.2	31.8	278.20	67.30	384.5	0.5	0.5	87.8	92.4
		2	4.0	3.4	90.9	-	5.0	-	4.6	-	28.9	30.7	136.40	32.80	193.6	0.5	0.5	49.3	52.4

Perhitungan Mu arah X

Portal	Kolom	Lt	h (m)	hn (m)	kiri	kanan	kiri	kanan	kiri	kanan	atas	bawah	PD (KN)	PL (KN)	Pu,k (KN)	α ka	α kb	atas	bawah
As D	D - 7 / D - 12	Dasar	4.0	3.4	-	188.1	-	5.0	-	4.6	44.8	46.9	33.3	667.6	768.9	0.5	0.5	102.8	107.6
		1	4.0	3.4	-	188.1	-	5.0	-	4.6	39.5	41.9	32.2	462.9	552.8	0.5	0.5	132.8	140.8
		2	4.0	3.4	-	147.3	-	5.0	-	4.6	23.8	28.3	22.1	253.8	315.5	0.5	0.5	97.9	116.4
		3	2.8	2.4		115.4	-	5.0	-	4.6	3.6	4.0	5.0	44.8	72.5	0.5	0.5	60.7	67.4
	D - 8 / D - 11	Dasar	4.0	3.4	188.1	147.3	5.0	5.0	4.6	4.6	49.2	42.9	50.7	880.7	1,036.7	0.5	0.5	200.5	174.8
		1	4.0	3.4	188.1	147.3	5.0	5.0	4.6	4.6	37.7	39.9	49.5	612.7	754.0	0.5	0.5	237.0	250.9
		2	4.0	3.4	147.3	115.4	5.0	5.0	4.6	4.6	23.6	27.8	33.4	337.9	435.8	0.5	0.5	175.5	206.7
		3	2.8	2.4	90.9	90.9	5.0	5.0	4.6	4.6	3.6	4.0	5.9	61.4	102.5	0.5	0.5	95.6	106.2
		praktis	2.2	2.0	90.9	90.9	5.0	5.0	4.6	4.6	0.0	0.0	0.0	53.1	87.6	0.5	0.5	95.1	95.1
	D - 9 / D - 10	Dasar	4.0	3.4	147.3	147.3	5.0	5.0	4.6	4.6	44.5	40.2	49.0	554.3	685.0	0.5	0.5	225.1	203.4
		1	4.0	3.4	147.3	147.3	5.0	5.0	4.6	4.6	30.9	32.6	47.4	278.2	393.4	0.5	0.5	208.5	220.0
		2	4.0	3.4	115.4	115.4	5.0	5.0	4.6	4.6	26.1	29.9	33.7	136.4	219.0	0.5	0.5	120.4	137.9
As E	E - 7 / E - 12	Dasar	4.0	3.4	-	188.1	-	5.0	-	4.6	50.8	44.4	676.80	109.40	858.4	0.5	0.5	112.3	98.2
		1	4.0	3.4	-	188.1	-	5.0	-	4.6	41.6	43.8	467.00	72.80	599.7	0.5	0.5	133.3	140.3
		2	4.0	3.4	-	147.3	-	5.0	-	4.6	25.2	29.6	257.90	36.00	334.4	0.5	0.5	98.5	115.7
		3	2.8	2.4		115.4	-	5.0	-	4.6	2.6	3.2	43.90	0.30	66.6	0.4	0.6	57.4	70.6
	E - 8 / E - 11	Dasar	4.0	3.4	188.1	147.3	5.0	5.0	4.6	4.6	48.6	42.5	891.00	237.10	1,243.2	0.5	0.5	200.2	175.1
		1	4.0	3.4	188.1	147.3	5.0	5.0	4.6	4.6	39.7	41.7	611.80	157.50	866.5	0.5	0.5	237.9	249.9
		2	4.0	3.4	147.3	115.4	5.0	5.0	4.6	4.6	25.1	29.3	337.60	79.90	484.3	0.5	0.5	176.3	205.8
		3	2.8	2.4	90.9	90.9	5.0	5.0	4.6	4.6	3.1	3.5	60.50	0.30	95.7	0.5	0.5	94.7	107.0
		praktis	2.2	2.0	90.9	90.9	5.0	5.0	4.6	4.6	0.01	0.01	53.10	0.00	87.6	0.5	0.5	95.1	95.1
	E - 9 / E - 10	Dasar	4.0	3.4	147.3	147.3	5.0	5.0	4.6	4.6	44.9	39.6	813.90	231.30	1,149.0	0.5	0.5	227.7	200.8
		1	4.0	3.4	147.3	147.3	5.0	5.0	4.6	4.6	31.8	33.2	542.70	154.10	783.2	0.5	0.5	209.6	218.9
		2	4.0	3.4	115.4	115.4	5.0	5.0	4.6	4.6	30	33.4	274.20	78.00	410.2	0.5	0.5	122.2	136.0
As F	F - 7 / F - 12	Dasar	4.0	3.4	-	188.1	-	5.0	-	4.6	45.8	51.8	676.80	109.40	858.4	0.5	0.5	98.8	111.7
		1	4.0	3.4	-	188.1	-	5.0	-	4.6	40.9	43.1	467.00	72.80	599.7	0.5	0.5	133.2	140.4
		2	4.0	3.4	-	147.3	-	5.0	-	4.6	24.4	26.7	257.90	36.00	334.4	0.5	0.5	102.3	112.0
		3	2.8	2.4		90.9	-	5.0	-	4.6	3.6	4.1	43.90	0.30	62.3	0.5	0.5	47.2	53.7
	F - 8 / F - 11	Dasar	4.0	3.4	188.1	147.3	5.0	5.0	4.6	4.6	49.6	43.9	891.00	237.10	1,243.2	0.5	0.5	199.1	176.2
		1	4.0	3.4	188.1	147.3	5.0	5.0	4.6	4.6	39	40.9	611.80	157.50	866.5	0.5	0.5	238.1	249.7
		2	4.0	3.4	147.3	115.4	5.0	5.0	4.6	4.6	24.3	28.2	337.60	79.90	484.3	0.5	0.5	176.9	205.3
		3	2.8	2.4	90.9	90.9	5.0	5.0	4.6	4.6	4	4.3	60.50	0.30	95.7	0.5	0.5	97.2	104.5
		praktis	2.2	2.0	90.9	90.9	5.0	5.0	4.6	4.6	0.01	0.01	53.10	0.00	87.6	0.5	0.5	95.1	95.1
	F - 9 / F - 10	Dasar	4.0	3.4	147.3	147.3	5.0	5.0	4.6	4.6	45.7	40.8	813.90	231.30	1,149.0	0.5	0.5	226.4	202.1
		1	4.0	3.4	147.3	147.3	5.0	5.0	4.6	4.6	32.9	34.4	542.70	154.10	783.2	0.5	0.5	209.5	219.0
		2	4.0	3.4	115.4	115.4	5.0	5.0	4.6	4.6	25.8	29.8	274.20	78.00	410.2	0.5	0.5	119.8	138.4

Perhitungan Mu arah X

As G	G - 7 / G - 12	Dasar	4.0	3.4	-	115.4	-	5.0	-	4.6	45.8	51.8	676.80	109.40	845.7	0.5	0.5	60.6	68.5
		1	4.0	3.4	-	115.4	-	5.0	-	4.6	40.9	43.1	467.00	72.80	587.0	0.5	0.5	81.7	86.1
		2	4.0	3.4	-	147.3	-	5.0	-	4.6	24.4	26.7	257.90	36.00	334.4	0.5	0.5	102.3	112.0
		3	2.8	2.4		90.9	-	5.0	-	4.6	3.6	4.1	43.90	0.30	62.3	0.5	0.5	47.2	53.7
	G - 8 / G - 11	Dasar	4.0	3.4	115.4	147.3	5.0	5.0	4.6	4.6	49.6	43.9	891.00	237.10	1,230.5	0.5	0.5	155.9	138.0
		1	4.0	3.4	115.4	147.3	5.0	5.0	4.6	4.6	39	40.9	611.80	157.50	853.7	0.5	0.5	186.5	195.6
		2	4.0	3.4	147.3	115.4	5.0	5.0	4.6	4.6	24.3	28.2	337.60	79.90	484.3	0.5	0.5	176.9	205.3
		3	2.8	2.4	90.9	90.9	5.0	5.0	4.6	4.6	4	4.3	60.50	0.30	95.7	0.5	0.5	97.2	104.5
		praktis	2.2	2.0	90.9	90.9	5.0	5.0	4.6	4.6	0.01	0.01	53.10	0.00	87.6	0.5	0.5	95.1	95.1
	G - 9 / G - 10	Dasar	4.0	3.4	147.3	147.3	5.0	5.0	4.6	4.6	45.7	40.8	813.90	231.30	1,149.0	0.5	0.5	226.4	202.1
		1	4.0	3.4	147.3	147.3	5.0	5.0	4.6	4.6	32.9	34.4	542.70	154.10	783.2	0.5	0.5	209.5	219.0
		2	4.0	3.4	115.4	115.4	5.0	5.0	4.6	4.6	25.8	29.8	274.20	78.00	410.2	0.5	0.5	119.8	138.4

LAMPIRAN 9

TABEL PERHITUNGAN TULANGAN GESER KOLOM

Perencanaan Tulangan Geser Kolom

Portal	Kolom	Lt	hn (m)	b (m)	h (m)	d (m)	fc' (Mpa)	fy (Mpa)	Mu,k (KNm)		Pu,k (KN)	Vu,k/Ø (KN)	Vc (KN)	Ø tul (mm)	Av (mm2)	Di daerah sendi plastis			Di luar sendi plastis		
									atas	bawah						Vs (KN)	s (mm)	Tul gsr	Vs (KN)	s (mm)	Tul gsr
As A	A - 7 / A - 12	Dasar	3.4	400	400	340	22.5	240	84.9032	131.053	546.2042	105.8607	133.73	10	157	105.8607	85	P10 -80	27.87389	160	P10 - 160
		1	3.4	400	400	340	22.5	240	129.83	150.913	389.2292	137.6189	126.2	10	157	137.6189	85	P10 -80	11.41895	160	P10 - 160
		2	3.4	400	400	340	22.5	240	275.732	65.2308	234.9142	167.1388	118.79	10	157	167.1388	76.68892	P10 -60	48.34579	160	P10 - 160
		3	2.4	400	400	340	22.5	240	24.4952	74.9266	55.46625	69.04297	110.18	10	157	69.04297	85	P10 -80	41.13679	160	P10 - 160
	A - 8 / A - 11	Dasar	3.4	400	400	340	22.5	240	146.06	116.22	826.9042	128.5683	147.21	10	157	128.5683	85	P10 -80	18.63956	160	P10 - 160
		1	3.4	400	400	340	22.5	240	165.874	175.089	584.1442	167.1388	135.56	10	157	167.1388	76.68892	P10 -60	31.58315	160	P10 - 160
		2	3.4	400	400	340	22.5	240	199.96	255.423	348.8217	223.2266	124.26	10	157	223.2266	57.42011	2P10 -100	98.96616	129.516	P10 - 100
		3	2.4	400	400	340	22.5	240	44.8718	54.5501	73.10625	69.04297	111.03	10	157	69.04297	85	P10 -80	41.98349	160	P10 - 160
		praktis	2	400	400	340	22.5	240	46.8703	46.8703	69.01125	78.11719	110.83	10	157	78.11719	85	P10 -80	32.71271	160	P10 - 160
	A - 9 / A - 10	Dasar	3.4	400	400	340	22.5	240	190.549	150.415	649.3492	167.1388	138.69	10	157	167.1388	76.68892	P10 -60	28.45338	160	P10 - 160
		1	3.4	400	400	340	22.5	240	145.002	84.5534	401.6629	112.527	126.8	10	157	112.527	85	P10 -80	14.26977	160	P10 - 160
		2	3.4	400	400	340	22.5	240	77.5371	99.0438	209.3029	86.55926	117.56	10	157	86.55926	85	P10 -80	31.00449	160	P10 - 160
As B	B - 7 / B - 12	Dasar	3.4	400	400	340	22.5	240	259.801	172.111	890.2833	211.7215	150.25	10	157	211.7215	60.54038	P10 -60	61.47143	160	P10 - 160
		1	3.4	400	400	340	22.5	240	293.281	268.205	630.4083	275.2379	137.78	10	157	275.2379	46.56953	2P10 - 80	137.4616	93.24568	P10 - 80
		2	3.4	400	400	340	22.5	240	224.66	345.858	369.3521	279.6659	125.25	10	157	279.6659	45.83218	2P10 - 80	154.42	83.00545	P10 - 80
		3	2.4	400	400	340	22.5	240	50.4529	148.391	73.0275	138.0859	111.02	10	157	138.0859	85	P10 -80	27.06326	160	P10 - 160
	B - 8 / B - 11	Dasar	3.4	400	400	340	22.5	240	291.53	233.029	1268.983	257.1367	168.43	10	157	257.1367	49.8478	2P10 - 80	88.70949	144.4907	P10 - 100
		1	3.4	400	400	340	22.5	240	292.477	278.041	884.9021	279.6659	149.99	10	157	279.6659	45.83218	2P10 - 80	129.6741	98.84544	P10 - 80
		2	3.4	400	400	340	22.5	240	333.688	351.25	429.6046	335.7537	128.14	10	157	335.7537	38.1759	2P10 - 60	207.6157	61.73761	P10 - 60
		3	2.4	400	400	340	22.5	240	90.0425	108.801	90.4575	138.0859	111.86	10	157	138.0859	85	P10 -80	26.22664	160	P10 - 160
		praktis	2	400	400	340	22.5	240	93.7406	93.7406	82.2675	156.2344	111.47	10	157	156.2344	82.04147	P10 -80	44.76819	160	P10 - 160
	B - 9 / B - 10	Dasar	3.4	400	400	340	22.5	240	377.358	304.568	819.5833	334.2777	146.86	10	157	334.2777	38.34446	2P10 - 60	187.4212	68.38981	P10 - 60
		1	3.4	400	400	340	22.5	240	209.086	187.51	421.3825	194.4096	127.74	10	157	194.4096	65.9314	P10 -60	66.66628	160	P10 - 160
		2	3.4	400	400	340	22.5	240	110.719	194.355	231.5425	149.5458	118.63	10	157	149.5458	85	P10 -80	30.91463	160	P10 - 160
As C	C - 7 / C - 12	Dasar	3.4	400	400	340	22.5	240	252.323	179.589	869.2833	211.7215	149.24	10	157	211.7215	60.54038	P10 -60	62.47941	160	P10 - 160
		1	3.4	400	400	340	22.5	240	247.111	323.408	618.3071	279.6659	137.2	10	157	279.6659	45.83218	2P10 - 80	142.4704	89.96745	P10 - 100
		2	3.4	400	400	340	22.5	240	184.616	274.495	349.6208	225.0541	124.3	10	157	225.0541	56.95386	2P10 -100	100.7552	127.2162	P10 - 160
		3	2.4	400	400	340	22.5	240	51.2173	147.626	73.5525	138.0859	111.05	10	157	138.0859	85	P10 -80	27.03806	160	P10 - 160
	C - 8 / C - 11	Dasar	3.4	400	400	340	22.5	240	288.067	236.492	1240.318	257.1367	167.05	10	157	257.1367	49.8478	2P10 - 80	90.08538	142.2839	P10 - 100
		1	3.4	400	400	340	22.5	240	322.859	359.067	878.9083	334.2777	149.7	10	157	334.2777	38.34446	2P10 - 60	184.5736	69.4449	P10 - 60
		2	3.4	400	400	340	22.5	240	311.017	370.909	508.4683	334.2777	131.92	10	157	334.2777	38.34446	2P10 - 60	202.3543	63.34284	P10 - 60
		3	2.4	400	400	340	22.5	240	89.8621	108.982	91.1925	138.0859	111.89	10	157	138.0859	85	P10 -80	26.19136	160	P10 - 160
		praktis	2	400	400	340	22.5	240	93.7406	93.7406	82.2675	156.2344	111.47	10	157	156.2344	82.04147	P10 -80	44.76819	160	P10 - 160
	C - 9 / C - 10	Dasar	3.4	400	400	340	22.5	240	373.277	308.65	801.6283	334.2777	145.99	10	157	334.2777	38.34446	2P10 - 60	188.283	68.07677	P10 - 60
		1	3.4	400	400	340	22.5	240	205.38	191.216	403.1125	194.4096	126.87	10	157	194.4096	65.9314	P10 -60	67.54322	160	P10 - 160
		2	3.4	400	400	340	22.5	240	110.258	194.816	217.9975	149.5458	117.98	10	157	149.5458	85	P10 -80	31.56478	160	P10 - 160

Perencanaan Tulangan Geser Kolom

Portal	Kolom	Lt	hn (m)	b (m)	h (m)	d (m)	fc' (Mpa)	fy (Mpa)	Mu,k (KNm)		Pu,k (KN)	Vu,k/Ø (KN)	Vc (KN)	Ø tul (mm)	Av (mm2)	Di daerah sendi plastis			Di luar sendi plastis		
									atas	bawah						Vs (KN)	s (mm)	Tul gsr	Vs (KN)	s (mm)	Tul gsr
As D	D - 7 / D - 12	Dasar	3.4	400	400	340	22.5	240	258.835	173.077	869.2833	211.7215	149.24	10	157	211.7215	60.54038	2P10 -100	62.47941	160	P10 - 160
		1	3.4	400	400	340	22.5	240	207.693	251.418	606.9758	225.0541	136.65	10	157	225.0541	56.95386	2P10 -100	88.40248	144.9925	P10 - 160
		2	3.4	400	400	340	22.5	240	175.693	283.417	349.6208	225.0541	124.3	10	157	225.0541	56.95386	2P10 -100	100.7552	127.2162	P10 - 160
		3	2.4	400	400	340	22.5	240	52.6351	146.209	73.5525	138.0859	111.05	10	157	138.0859	85	P10 -80	27.03806	160	P10 - 160
	D - 8 / D - 11	Dasar	3.4	400	400	340	22.5	240	290.034	234.525	1240.318	257.1367	167.05	10	157	257.1367	49.8478	2P10 -80	90.08538	142.2839	P10 - 160
		1	3.4	400	400	340	22.5	240	329.206	352.721	878.9083	334.2777	149.7	10	157	334.2777	38.34446	2P10 -60	184.5736	69.4449	P10 - 160
		2	3.4	400	400	340	22.5	240	305.458	376.468	508.4683	334.2777	131.92	10	157	334.2777	38.34446	2P10 -60	202.3543	63.34284	P10 - 100
		3	2.4	400	400	340	22.5	240	91.2127	107.631	91.1925	138.0859	111.89	10	157	138.0859	85	P10 -80	26.19136	160	P10 - 160
		praktis	2	400	400	340	22.5	240	93.7406	93.7406	82.2675	156.2344	111.47	10	157	156.2344	82.04147	P10 -80	44.76819	160	P10 - 160
	D - 9 / D - 10	Dasar	3.4	400	400	340	22.5	240	378.711	303.216	801.6283	334.2777	145.99	10	157	334.2777	38.34446	2P10 -60	188.283	68.07677	P10 - 160
		1	3.4	400	400	340	22.5	240	274.971	295.547	420.8021	279.6659	127.72	10	157	279.6659	45.83218	P10 -80	151.9504	84.35448	P10 - 160
		2	3.4	400	400	340	22.5	240	191.543	247.318	235.6871	215.1276	118.83	10	157	215.1276	59.58184	P10 -80	96.29744	133.1053	P10 - 160
As E	E - 7 / E - 12	Dasar	3.4	400	400	340	22.5	240	259.575	172.337	882.6183	211.7215	149.88	10	157	211.7215	60.54038	P10 -60	61.83934	160	P10 - 160
		1	3.4	400	400	340	22.5	240	208.758	250.352	613.4858	225.0541	136.96	10	157	225.0541	56.95386	2P10 - 100	88.09001	145.5068	P10 - 80
		2	3.4	400	400	340	22.5	240	175.58	283.53	355.2908	225.0541	124.57	10	157	225.0541	56.95386	2P10 - 100	100.4831	127.5608	P10 - 80
		3	2.4	400	400	340	22.5	240	54.7541	144.09	72.9225	138.0859	111.02	10	157	138.0859	85	P10 -80	27.0683	160	P10 - 160
	E - 8 / E - 11	Dasar	3.4	400	400	340	22.5	240	290.313	234.246	1253.863	257.1367	167.7	10	157	257.1367	49.8478	2P10 - 80	89.43523	143.3182	P10 - 100
		1	3.4	400	400	340	22.5	240	329.825	352.101	877.1233	334.2777	149.62	10	157	334.2777	38.34446	2P10 - 60	184.6593	69.41268	P10 - 80
		2	3.4	400	400	340	22.5	240	335.016	346.91	507.7333	334.2777	131.89	10	157	334.2777	38.34446	2P10 - 60	202.3896	63.3318	P10 - 60
		3	2.4	400	400	340	22.5	240	91.2127	107.631	90.3525	138.0859	111.85	10	157	138.0859	85	P10 -80	26.23168	160	P10 - 160
		praktis	2	400	400	340	22.5	240	93.7406	93.7406	82.2675	156.2344	111.47	10	157	156.2344	82.04147	P10 -80	44.76819	160	P10 - 160
	E - 9 / E - 10	Dasar	3.4	400	400	340	22.5	240	379.485	302.442	1166.818	334.2777	163.52	10	157	334.2777	38.34446	2P10 - 60	170.7543	75.06516	P10 - 60
		1	3.4	400	400	340	22.5	240	274.971	295.547	789.6671	279.6659	145.42	10	157	279.6659	45.83218	2P10 - 80	134.2453	95.47967	P10 - 160
		2	3.4	400	400	340	22.5	240	192.457	246.403	427.8371	215.1276	128.05	10	157	215.1276	59.58184	2P10 - 100	87.07446	147.2039	P10 - 160
As F	F - 7 / F - 12	Dasar	3.4	400	400	340	22.5	240	259.793	172.119	882.6183	211.7215	149.88	10	157	211.7215	60.54038	2P10 - 100	61.83934	160	P10 - 160
		1	3.4	400	400	340	22.5	240	208.686	250.424	613.4858	225.0541	136.96	10	157	225.0541	56.95386	2P10 - 100	88.09001	145.5068	P10 - 100
		2	3.4	400	400	340	22.5	240	195.711	314.587	360.4971	250.146	124.82	10	157	250.146	51.24087	2P10 - 100	125.3251	102.2756	P10 - 160
		3	2.4	400	400	340	22.5	240	54.7541	144.09	72.9225	138.0859	111.02	10	157	138.0859	85	P10 -80	27.0683	160	P10 - 160
	F - 8 / F - 11	Dasar	3.4	400	400	340	22.5	240	338.894	273.679	1265.501	300.2811	168.26	10	157	300.2811	42.68566	2P10 - 80	132.0211	97.08825	P10 - 100
		1	3.4	400	400	340	22.5	240	330.15	351.776	877.1233	334.2777	149.62	10	157	334.2777	38.34446	2P10 - 60	184.6593	69.41268	P10 - 60
		2	3.4	400	400	340	22.5	240	356.155	440.191	519.3708	390.3655	132.45	10	157	390.3655	32.83512	2P10 - 60	257.9188	49.69663	P10 - 60
		3	2.4	400	400	340	22.5	240	91.2127	107.631	90.3525	138.0859	111.85	10	157	138.0859	85	P10 -80	26.23168	160	P10 - 160
		praktis	2	400	400	340	22.5	240	93.7406	93.7406	82.2675	156.2344	111.47	10	157	156.2344	82.04147	P10 -80	44.76819	160	P10 - 160
	F - 9 / F - 10	Dasar	3.4	400	400	340	22.5	240	379.702	302.225	1166.818	334.2777	163.52	10	157	334.2777	38.34446	2P10 - 60	170.7543	75.06516	P10 - 60
		1	3.4	400	400	340	22.5	240	329	352.927	800.9983	334.2777	145.96	10	157	334.2777	38.34446	P10 -60	188.3132	68.06584	P10 - 160
		2	3.4	400	400	340	22.5	240	229.549	295.01	439.1683	257.1367	128.6	10	157	257.1367	49.8478	P10 -80	128.5397	99.71785	P10 - 160

Portal	Kolom	Lt	hn (m)	b (m)	h (m)	d (m)	fc' (Mpa)	fy (Mpa)	Mu,k (KNm)		Pu,k (KN)	Vu,k/Ø (KN)	Vc (KN)	Ø tul (mm)	Av (mm2)	Di daerah sendi plastis			Di luar sendi plastis		
									atas	bawah						Vs (KN)	s (mm)	Tul gsr	Vs (KN)	s (mm)	Tul gsr
As G	G - 7 / G - 12	Dasar	3.4	400	400	340	22.5	240	129.896	86.0596	854	105.8607	148.51	10	157	105.8607	85	P10 -80	42.65082	160	P10 - 160
		1	3.4	400	400	340	22.5	240	104.343	125.212	590	112.527	135.84	10	157	112.527	85	P10 -80	23.31635	160	P10 - 160
		2	3.4	400	400	340	22.5	240	107.671	173.071	337	137.6189	123.7	10	157	137.6189	85	P10 -60	13.91873	160	P10 - 160
		3	2.4	400	400	340	22.5	240	27.377	72.0448	60	69.04297	110.38	10	157	69.04297	85	P10 -80	41.33838	160	P10 - 160
	G - 8 / G - 11	Dasar	3.4	400	400	340	22.5	240	193.793	156.501	1231	171.7128	166.6	10	157	171.7128	74.64614	P10 -60	5.117329	160	P10 - 160
		1	3.4	400	400	340	22.5	240	165.075	175.888	842	167.1388	147.95	10	157	167.1388	76.68892	P10 -60	19.18504	160	P10 - 160
		2	3.4	400	400	340	22.5	240	203.663	251.719	485	223.2266	130.78	10	157	223.2266	57.42011	2P10 -100	92.44456	138.6528	P10 - 120
		3	2.4	400	400	340	22.5	240	45.6064	53.8155	77	69.04297	111.22	10	157	69.04297	85	P10 -80	42.175	160	P10 - 160
		praktis	2	400	400	340	22.5	240	46.8703	46.8703	69	78.11719	110.83	10	157	78.11719	85	P10 -80	32.71271	160	P10 - 160
	G - 9 / G - 10	Dasar	3.4	400	400	340	22.5	240	189.851	151.112	1132	167.1388	161.86	10	157	167.1388	76.68892	P10 -60	5.280014	160	P10 - 160
		1	3.4	400	400	340	22.5	240	164.5	176.463	766	167.1388	144.3	10	157	167.1388	76.68892	P10 -60	22.83896	160	P10 - 160
		2	3.4	400	400	340	22.5	240	114.775	147.505	404	128.5683	126.93	10	157	128.5683	85	P10 -80	1.635881	160	P10 - 160

LAMPIRAN 10

TABEL PERHITUNGAN TULANGAN MEMANJANG KOLOM

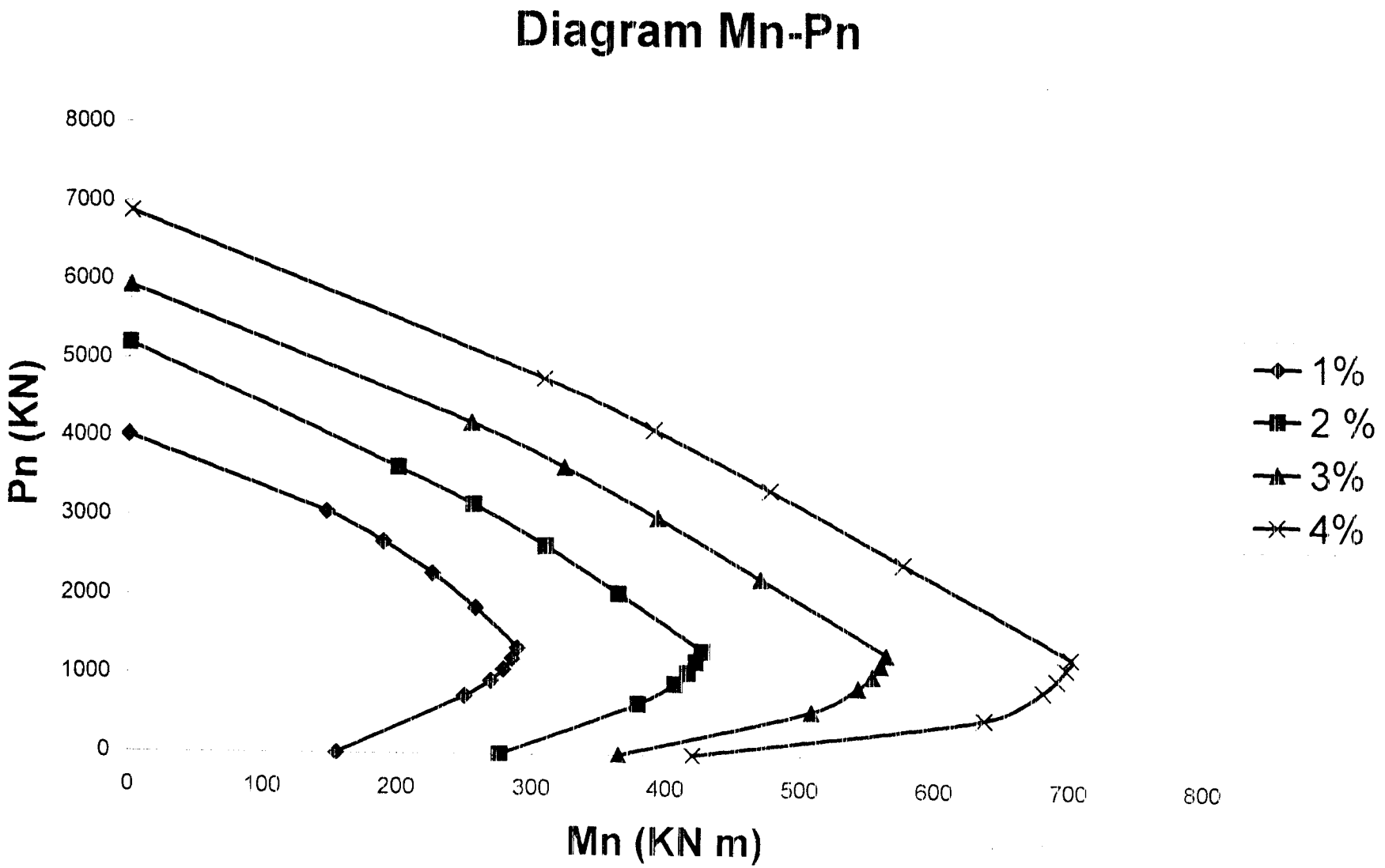
Diagram Mn-Pn
Pn (KN)
8000
7000
6000
5000
4000
3000
2000
1000
0
0
100
200
300
400
500
600
700
800
Mn (KN m)
1%
2 %
3%
4%

anga

x
79
355
22
315
2.5
60
00
00
60
40
0%
600
00
22
80
.1
3
40
2.5
625
31
60
1781
733
543
60
63
94
92
esak
78
1
!

Perencanaan Tulangan memanjang Kolom

Kolom	As A - 7 / As A - 12							
Lantai	Dasar		1		2		3	
Arah	x	y	x	y	x	y	x	y
Mu (KNm)	79	131	97.2	151	78.8	276	92.1	75
Pu (KNm)	539	546	382	389	216	235	58	55
Mu,k/Ø (KNm)	122	202	150	232	121	425	142	115
Pu,k/Ø (KN)	829	840	588	598	332	362	89	85
fc' (Mpa)	22.5	22.5	22.5	22.5	22.5	22.5	22.5	22.5
fy (Mpa)	360	360	360	360	360	360	360	360
b (mm)	400	400	400	400	400	400	300	300
h (mm)	400	400	400	400	400	400	300	300
d' (mm)	60	60	60	60	60	60	60	60
d (mm)	340	340	340	340	340	340	240	240
ρg (%)	***1.0%***	***1.0%***	***1.0%***	***1.0%***	***1.0%***	***1.0%***	***1.0%***	***1.0%***
Ast (mm2)	1600	1600	1600	1600	1600	1600	900	900
As=As' (mm2)	800	800	800	800	800	800	450	450
Ø tul (mm)	***22***	***22***	***22***	***22***	***22***	***22***	***22***	***22***
A1Ø (mm2)	380	380	380	380	380	380	380	380
n (btg)	2.1	2.1	2.1	2.1	2.1	2.1	1.2	1.2
n (btg)	***3***	***3***	***3***	***3***	***3***	***3***	***2***	***2***
Asada=As'ada	1140	1140	1140	1140	1140	1140	760	760
xb (mm)	212.5	212.5	212.5	212.5	212.5	212.5	150	150
ab (mm)	180.625	180.625	180.625	180.625	180.625	180.625	127.5	127.5
fs' (Mpa)	431	431	431	431	431	431	360	360
fs' pakai (Mpa)	360	360	360	360	360	360	360	360
Ccb (N)	1381781	1381781	1381781	1381781	1381781	1381781	731531	731531
Csb (N)	388733	388733	388733	388733	388733	388733	259155	259155
Tsb (N)	410543	410543	410543	410543	410543	410543	273696	273696
Pnb (KN)	1360	1360	1360	1360	1360	1360	717	717
Mnb (KNm)	263	263	263	263	263	263	111	111
eb (m)	0.194	0.194	0.194	0.194	0.194	0.194	0.155	0.155
e (m)	0.147	0.240	0.254	0.388	0.365	1.174	1.588	1.364
Cek Patah	Pth Desak	Pth Tarik	Pth Tarik	Pth Tarik	Pth Tarik	Pth Tarik	Pth Tarik	Pth Tarik
Pn (KN)	1734	3246	3246	3244	3245	3233	1825	1828
Mn (KNm)	254	779	826	1259	1184	3797	2898	2492
Kontrol (Mn - Pn	**Ok !**	**Ok !**	**Ok !**	**Ok !**	**Ok !**	**Ok !**	**Ok !**	**Ok !**

Perencanaan Tulangan memanjang Kolom

Kolom	As C - 7 / As C - 12							
Lantai	Dasar		1		2		3	
Arah	x	y	x	y	x	y	x	y
Mu (KNm)	74	258	97	251	71	283	55	146
Pu (KNm)	833	869	581	618	318	349	63	73
Mu,k/Ø (KNm)	114	397	149	386	109	435	85	225
Pu,k/Ø (KN)	1282	1337	894	951	489	537	97	112
fc' (Mpa)	22.5	22.5	22.5	22.5	22.5	22.5	22.5	22.5
fy (Mpa)	360	360	360	360	360	360	360	360
b (mm)	400	400	400	400	400	400	300	300
h (mm)	400	400	400	400	400	400	300	300
d' (mm)	60	60	60	60	60	60	60	60
d (mm)	340	340	340	340	340	340	240	240
ρg (%)	***1.0%***	***2.0%***	***1.0%***	***2.0%***	***1.0%***	***2.0%***	***1.0%***	***1.0%***
Ast (mm2)	1600	3200	1600	3200	1600	3200	900	900
As=As' (mm2)	800	1600	800	1600	800	1600	450	450
Ø tul (mm)	***22***	***22***	***22***	***22***	***22***	***22***	***22***	***22***
A1Ø (mm2)	380	380	380	380	380	380	380	380
n (btg)	2.1	4.2	2.1	4.2	2.1	4.2	1.2	1.2
n (btg)	***3***	***5***	***3***	***5***	***3***	***5***	***2***	***2***
Asada=As'ada	1140	1901	1140	1901	1140	1901	760	760
xb (mm)	212.5	212.5	212.5	212.5	212.5	212.5	150	150
ab (mm)	180.625	180.625	180.625	180.625	180.625	180.625	127.5	127.5
fs' (Mpa)	431	431	431	431	431	431	360	360
fs' pakai (Mpa)	360	360	360	360	360	360	360	360
Ccb (N)	1381781	1381781	1381781	1381781	1381781	1381781	731531	731531
Csb (N)	388733	647889	388733	647889	388733	647889	259155	259155
Tsb (N)	410543	684239	410543	684239	410543	684239	273696	273696
Pnb (KN)	1360	1345	1360	1345	1360	1345	717	717
Mnb (KNm)	263	338	263	338	263	338	111	111
eb (m)	0.194	0.251	0.194	0.251	0.194	0.251	0.155	0.155
e (m)	0.089	0.297	0.167	0.406	0.223	0.811	0.873	2.000
Cek Patah	Pth Desak	Pth Tarik	Pth Desak	Pth Tarik	Pth Tarik	Pth Tarik	Pth Tarik	Pth Tarik
Pn (KN)	2215	3246	1610	3244	3247	3238	1833	1821
Mn (KNm)	197	964	269	1318	725	2626	1600	3642
Kontrol (Mn - Pn)	**Ok !**	**Ok !**	**Ok !**	**Ok !**	**Ok !**	**Ok !**	**Ok !**	**Ok !**

Perencanaan Tulangan memanjang Kolom

Kolom	As D - 7 / As D - 12							
Lantai	Dasar		1		2		3	
Arah	x	y	x	y	x	y	x	y
Mu (KNm)	108	259	140	250	116	283	54	144
Pu (KNm)	769	869	553	616	316	349	72	73
Mu,k/Ø (KNm)	166	398	215	385	178	435	83	222
Pu,k/Ø (KN)	1183	1337	851	948	486	537	111	112
fc' (Mpa)	22.5	22.5	22.5	22.5	22.5	22.5	22.5	22.5
fy (Mpa)	360	360	360	360	360	360	360	360
b (mm)	400	400	400	400	400	400	300	300
h (mm)	400	400	400	400	400	400	300	300
d' (mm)	60	60	60	60	60	60	60	60
d (mm)	340	340	340	340	340	340	240	240
ρg (%)	***1.0%***	***2.0%***	***1.0%***	***2.0%***	***1.0%***	***2.0%***	***1.0%***	***1.0%***
Ast (mm2)	1600	3200	1600	3200	1600	3200	900	900
As=As' (mm2)	800	1600	800	1600	800	1600	450	450
Ø tul (mm)	***22***	***22***	***22***	***22***	***22***	***22***	***22***	***22***
A1Ø (mm2)	380	380	380	380	380	380	380	380
n (btg)	2.1	4.2	2.1	4.2	2.1	4.2	1.2	1.2
n (btg)	***3***	***5***	***3***	***5***	***3***	***5***	***2***	***2***
Asada=As'ada	1140	1901	1140	1901	1140	1901	760	760
xb (mm)	212.5	212.5	212.5	212.5	212.5	212.5	150	150
ab (mm)	180.625	180.625	180.625	180.625	180.625	180.625	127.5	127.5
fs' (Mpa)	431	431	431	431	431	431	360	360
fs' pakai (Mpa)	360	360	360	360	360	360	360	360
Ccb (N)	1381781	1381781	1381781	1381781	1381781	1381781	731531	731531
Csb (N)	388733	647889	388733	647889	388733	647889	259155	259155
Tsb (N)	410543	684239	410543	684239	410543	684239	273696	273696
Pnb (KN)	1360	1345	1360	1345	1360	1345	717	717
Mnb (KNm)	263	338	263	338	263	338	111	111
eb (m)	0.194	0.251	0.194	0.251	0.194	0.251	0.155	0.155
e (m)	0.140	0.298	0.253	0.406	0.367	0.811	0.750	1.973
Cek Patah	Pth Desak	Pth Tarik	Pth Tarik	Pth Tarik	Pth Tarik	Pth Tarik	Pth Tarik	Pth Tarik
Pn (KN)	1775	3246	3246	3244	3245	3238	1834	1821
Mn (KNm)	249	967	822	1317	1191	2626	1376	3592
Kontrol (Mn - P	**Ok !**	**Ok !**	**Ok !**	**Ok !**	**Ok !**	**Ok !**	**Ok !**	**Ok !**

Tabel 4.46 Perencanaan Tulangan memanjang Kolom

Kolom	As E - 7 / As E - 12							
Lantai	Dasar		1		2		3	
Arah	x	y	x	y	x	y	x	y
Mu (KNm)	112	259	140	250	112	283	54	144
Pu (KNm)	858	882	599	613	334	355	66	73
Mu,k/Ø (KNm)	172	398	215	385	172	435	83	222
Pu,k/Ø (KN)	1320	1357	922	943	514	546	102	112
fc' (Mpa)	22.5	22.5	22.5	22.5	22.5	22.5	22.5	22.5
fy (Mpa)	360	360	360	360	360	360	360	360
b (mm)	400	400	400	400	400	400	300	300
h (mm)	400	400	400	400	400	400	300	300
d' (mm)	60	60	60	60	60	60	60	60
d (mm)	340	340	340	340	340	340	240	240
ρg (%)	***1.0%***	***2.0%***	***1.0%***	***2.0%***	***1.0%***	***2.0%***	***1.0%***	***1.0%***
Ast (mm2)	1600	3200	1600	3200	1600	3200	900	900
As=As' (mm2)	800	1600	800	1600	800	1600	450	450
Ø tul (mm)	***22***	***22***	***22***	***22***	***22***	***22***	***22***	***22***
A1Ø (mm2)	380	380	380	380	380	380	380	380
n (btg)	2.1	4.2	2.1	4.2	2.1	4.2	1.2	1.2
n (btg)	***3***	***5***	***3***	***5***	***3***	***5***	***2***	***2***
Asada=As'ada	1140	1901	1140	1901	1140	1901	760	760
xb (mm)	212.5	212.5	212.5	212.5	212.5	212.5	150	150
ab (mm)	180.625	180.625	180.625	180.625	180.625	180.625	127.5	127.5
fs' (Mpa)	431	431	431	431	431	431	360	360
fs' pakai (Mpa)	360	360	360	360	360	360	360	360
Ccb (N)	1381781	1381781	1381781	1381781	1381781	1381781	731531	731531
Csb (N)	388733	647889	388733	647889	388733	647889	259155	259155
Tsb (N)	410543	684239	410543	684239	410543	684239	273696	273696
Pnb (KN)	1360	1345	1360	1345	1360	1345	717	717
Mnb (KNm)	263	338	263	338	263	338	111	111
eb (m)	0.194	0.251	0.194	0.251	0.194	0.251	0.155	0.155
e (m)	0.131	0.294	0.234	0.408	0.335	0.797	0.818	1.973
Cek Patah	Pth Desak	Pth Tarik	Pth Tarik	Pth Tarik	Pth Tarik	Pth Tarik	Pth Tarik	Pth Tarik
Pn (KN)	1845	3246	3246	3244	3245	3238	1834	1821
Mn (KNm)	241	953	759	1323	1088	2582	1500	3592
Kontrol (Mn - P	**Ok !**	**Ok !**	**Ok !**	**Ok !**	**Ok !**	**Ok !**	**Ok !**	**Ok !**

Perencanaan Tulangan memanjang Kolom

Kolom	As F - 7 / As F - 12							
Lantai	Dasar		1		2		3	
Arah	x	y	x	y	x	y	x	y
Mu (KNm)	112	259	140	250	112	283	54	144
Pu (KNm)	858	882	599	613	334	355	66	73
Mu,k/Ø (KNm)	172	398	215	385	172	435	83	222
Pu,k/Ø (KN)	1320	1357	922	943	514	546	102	112
fc' (Mpa)	22.5	22.5	22.5	22.5	22.5	22.5	22.5	22.5
fy (Mpa)	360	360	360	360	360	360	360	360
b (mm)	400	400	400	400	400	400	300	300
h (mm)	400	400	400	400	400	400	300	300
d' (mm)	60	60	60	60	60	60	60	60
d (mm)	340	340	340	340	340	340	240	240
ρg (%)	***1.0%***	***2.0%***	***1.0%***	***2.0%***	***1.0%***	***2.0%***	***1.0%***	***1.0%***
Ast (mm2)	1600	3200	1600	3200	1600	3200	900	900
As=As' (mm2)	800	1600	800	1600	800	1600	450	450
Ø tul (mm)	***22***	***22***	***22***	***22***	***22***	***22***	***22***	***22***
A1Ø (mm2)	380	380	380	380	380	380	380	380
n (btg)	2.1	4.2	2.1	4.2	2.1	4.2	1.2	1.2
n (btg)	***3***	***5***	***3***	***5***	***3***	***5***	***2***	***2***
Asada=As'ada	1140	1901	1140	1901	1140	1901	760	760
xb (mm)	212.5	212.5	212.5	212.5	212.5	212.5	150	150
ab (mm)	180.625	180.625	180.625	180.625	180.625	180.625	127.5	127.5
fs' (Mpa)	431	431	431	431	431	431	360	360
fs' pakai (Mpa)	360	360	360	360	360	360	360	360
Ccb (N)	1381781	1381781	1381781	1381781	1381781	1381781	731531	731531
Csb (N)	388733	647889	388733	647889	388733	647889	259155	259155
Tsb (N)	410543	684239	410543	684239	410543	684239	273696	273696
Pnb (KN)	1360	1345	1360	1345	1360	1345	717	717
Mnb (KNm)	263	338	263	338	263	338	111	111
eb (m)	0.194	0.251	0.194	0.251	0.194	0.251	0.155	0.155
e (m)	0.131	0.294	0.234	0.408	0.335	0.797	0.818	1.973
Cek Patah	Pth Desak	Pth Tarik	Pth Tarik	Pth Tarik	Pth Tarik	Pth Tarik	Pth Tarik	Pth Tarik
Pn (KN)	1845	3246	3246	3244	3245	3238	1834	1821
Mn (KNm)	241	953	759	1323	1088	2582	1500	3592
Kontrol (Mn - Pn	**Ok !**	**Ok !**	**Ok !**	**Ok !**	**Ok !**	**Ok !**	**Ok !**	**Ok !**

Perencanaan Tulangan memanjang Kolom

Kolom	As G - 7 / As G - 12							
Lantai	Dasar		1		2		3	
Arah	x	y	x	y	x	y	x	y
Mu (KNm)	68	129	86	125	112	173	54	72
Pu (KNm)	845	882	586	613	334	355	62	73
Mu,k/Ø (KNm)	105	198	132	192	172	266	83	111
Pu,k/Ø (KN)	1300	1357	902	943	514	546	95	112
fc' (Mpa)	22.5	22.5	22.5	22.5	22.5	22.5	22.5	22.5
fy (Mpa)	360	360	360	360	360	360	360	360
b (mm)	400	400	400	400	400	400	300	300
h (mm)	400	400	400	400	400	400	300	300
d' (mm)	60	60	60	60	60	60	60	60
d (mm)	340	340	340	340	340	340	240	240
ρg (%)	***1.0%***	***1.0%***	***1.0%***	***1.0%***	***1.0%***	***1.0%***	***1.0%***	***1.0%***
Ast (mm2)	1600	1600	1600	1600	1600	1600	900	900
As=As' (mm2)	800	800	800	800	800	800	450	450
Ø tul (mm)	***22***	***22***	***22***	***22***	***22***	***22***	***22***	***22***
A1Ø (mm2)	380	380	380	380	380	380	380	380
n (btg)	2.1	2.1	2.1	2.1	2.1	2.1	1.2	1.2
n (btg)	***3***	***3***	***3***	***3***	***3***	***3***	***2***	***2***
Asada=As'ada	1140	1140	1140	1140	1140	1140	760	760
xb (mm)	212.5	212.5	212.5	212.5	212.5	212.5	150	150
ab (mm)	180.625	180.625	180.625	180.625	180.625	180.625	127.5	127.5
fs' (Mpa)	431	431	431	431	431	431	360	360
fs' pakai (Mpa)	360	360	360	360	360	360	360	360
Ccb (N)	1381781	1381781	1381781	1381781	1381781	1381781	731531	731531
Csb (N)	388733	388733	388733	388733	388733	388733	259155	259155
Tsb (N)	410543	410543	410543	410543	410543	410543	273696	273696
Pnb (KN)	1360	1360	1360	1360	1360	1360	717	717
Mnb (KNm)	263	263	263	263	263	263	111	111
eb (m)	0.194	0.194	0.194	0.194	0.194	0.194	0.155	0.155
e (m)	0.080	0.146	0.147	0.204	0.335	0.487	0.871	0.986
Cek Patah	Pth Desak	Pth Desak	Pth Desak	Pth Tarik	Pth Tarik	Pth Tarik	Pth Tarik	Pth Tarik
Pn (KN)	2308	1736	1733	3247	3245	3243	1833	1832
Mn (KNm)	186	254	254	662	1088	1580	1596	1807
Kontrol (Mn - Pn)	**Ok !**	**Ok !**	**Ok !**	**Ok !**	**Ok !**	**Ok !**	**Ok !**	**Ok !**

Perencanaan Tulangan memanjang Kolom

Kolom	As A - 8 / As A - 11									
Lantai	Dasar		1		2		3		praktis	
Arah	x	y	x	y	x	y	x	y	x	y
Mu (KNm)	157	146	194	175	155	225	190	55	95	47
Pu (KNm)	836	827	592	584	334	348	92	73	88	69
Mu,k/Ø (KNm	242	225	298	269	238	346	292	85	146	72
Pu,k/Ø (KN)	1286	1272	911	898	514	535	142	112	135	106
fc' (Mpa)	22.5	22.5	22.5	22.5	22.5	22.5	22.5	22.5	22.5	22.5
fy (Mpa)	360	360	360	360	360	360	360	360	360	360
b (mm)	400	400	400	400	400	400	300	300	300	300
h (mm)	400	400	400	400	400	400	300	300	300	300
d' (mm)	60	60	60	60	60	60	60	60	60	60
d (mm)	340	340	340	340	340	340	240	240	240	240
ρg (%)	***1.5%***	***1.5%***	***1.5%***	***1.5%***	***1.5%***	***1.5%***	***1.0%***	***1.0%***	***1.0%***	***1.0%***
Ast (mm2)	2400	2400	2400	2400	2400	2400	900	900	900	900
As=As' (mm2	1200	1200	1200	1200	1200	1200	450	450	450	450
Ø tul (mm)	***22***	***22***	***22***	***22***	***22***	***22***	***22***	***22***	***22***	***22***
A1Ø (mm2)	380	380	380	380	380	380	380	380	380	380
n (btg)	3.2	3.2	3.2	3.2	3.2	3.2	1.2	1.2	1.2	1.2
n (btg)	***4***	***4***	***4***	***4***	***4***	***4***	***2***	***2***	***2***	***2***
Asada=As'ada	1521	1521	1521	1521	1521	1521	760	760	760	760
xb (mm)	212.5	212.5	212.5	212.5	212.5	212.5	150	150	150	150
ab (mm)	180.625	180.625	180.625	180.625	180.625	180.625	127.5	127.5	127.5	127.5
fs' (Mpa)	431	431	431	431	431	431	360	360	360	360
fs' pakai (Mpa	360	360	360	360	360	360	360	360	360	360
Ccb (N)	1381781	1381781	1381781	1381781	1381781	1381781	731531	731531	731531	731531
Csb (N)	518311	518311	518311	518311	518311	518311	259155	259155	259155	259155
Tsb (N)	547391	547391	547391	547391	547391	547391	273696	273696	273696	273696
Pnb (KN)	1353	1353	1353	1353	1353	1353	717	717	717	717
Mnb (KNm)	301	301	301	301	301	301	111	111	111	111
eb (m)	0.222	0.222	0.222	0.222	0.222	0.222	0.155	0.155	0.155	0.155
e (m)	0.188	0.177	0.328	0.300	0.464	0.647	2.065	0.753	1.080	0.681
Cek Patah	Pth Desak	Pth Desak	Pth Tarik	Pth Tarik	Pth Tarik	Pth Tarik	Pth Tarik	Pth Tarik	Pth Tarik	Pth Tarik
Pn (KN)	1618	1679	3245	3245	3243	3240	1820	1834	1831	1835
Mn (KNm)	304	296	1063	973	1505	2095	3759	1382	1976	1250
Kontrol (Mn -	**Ok !**	**Ok !**	**Ok !**	**Ok !**	**Ok !**	**Ok !**	**Ok !**	**Ok !**	**Ok !**	**Ok !**

Perencanaan Tulangan memanjang Kolom

Kolom	As E - 8 / As E - 11									
Lantai	Dasar		1		2		3		praktis	
Arah	x	y	x	y	x	y	x	y	x	y
Mu (KNm)	200	240	250	252	205	246	107	108	95	94
Pu (KNm)	1043	1053	866	877	484	508	96	90	88	82
Mu,k/Ø (KNm	308	369	385	388	315	378	165	166	146	145
Pu,k/Ø (KN)	1605	1620	1332	1349	745	782	148	138	135	126
fc' (Mpa)	22.5	22.5	22.5	22.5	22.5	22.5	22.5	22.5	22.5	22.5
fy (Mpa)	360	360	360	360	360	360	360	360	360	360
b (mm)	400	400	400	400	400	400	300	300	300	300
h (mm)	400	400	400	400	400	400	300	300	300	300
d' (mm)	60	60	60	60	60	60	60	60	60	60
d (mm)	340	340	340	340	340	340	240	240	240	240
ρg (%)	***2.5%***	***2.5%***	***2.0%***	***2.0%***	***2.0%***	***2.0%***	***1.0%***	***1.0%***	***1.0%***	***1.0%***
Ast (mm2)	4000	4000	3200	3200	3200	3200	900	900	900	900
As=As' (mm2)	2000	2000	1600	1600	1600	1600	450	450	450	450
Ø tul (mm)	***22***	***22***	***22***	***22***	***22***	***22***	***22***	***22***	***22***	***22***
A1Ø (mm2)	380	380	380	380	380	380	380	380	380	380
n (btg)	5.3	5.3	4.2	4.2	4.2	4.2	1.2	1.2	1.2	1.2
n (btg)	***6***	***6***	***5***	***5***	***5***	***5***	***2***	***2***	***2***	***2***
Asada=As'ada	2281	2281	1901	1901	1901	1901	760	760	760	760
xb (mm)	212.5	212.5	212.5	212.5	212.5	212.5	150	150	150	150
ab (mm)	180.625	180.625	180.625	180.625	180.625	180.625	127.5	127.5	127.5	127.5
fs' (Mpa)	431	431	431	431	431	431	360	360	360	360
fs' pakai (Mpa	360	360	360	360	360	360	360	360	360	360
Ccb (N)	1381781	1381781	1381781	1381781	1381781	1381781	731531	731531	731531	731531
Csb (N)	777466	777466	647889	647889	647889	647889	259155	259155	259155	259155
Tsb (N)	821087	821087	684239	684239	684239	684239	273696	273696	273696	273696
Pnb (KN)	1338	1338	1345	1345	1345	1345	717	717	717	717
Mnb (KNm)	375	375	338	338	338	338	111	111	111	111
eb (m)	0.281	0.281	0.251	0.251	0.251	0.251	0.155	0.155	0.155	0.155
e (m)	0.192	0.228	0.289	0.287	0.424	0.484	1.115	1.200	1.080	1.146
Cek Patah	Pth Desak	Pth Desak	Pth Tarik	Pth Tarik	Pth Tarik	Pth Tarik	Pth Tarik	Pth Tarik	Pth Tarik	Pth Tarik
Pn (KN)	1828	1640	3246	3246	3244	3243	1830	1829	1831	1830
Mn (KNm)	351	374	937	933	1374	1570	2040	2195	1976	2098
Kontrol (Mn -	**Ok !**	**Ok !**	**Ok !**	**Ok !**	**Ok !**	**Ok !**	**Ok !**	**Ok !**	**Ok !**	**Ok !**

Perencanaan Tulangan memanjang Kolom

Kolom	As A -9 / As A - 10					
Lantai	Dasar		1		2	
Arah	x	y	x	y	x	y
Mu (KNm)	203	191	194	145	129	99
Pu (KNm)	658	649	422	401	230	209
Mu,k/Ø (KNm	312	294	298	223	198	152
Pu,k/Ø (KN)	1012	998	649	617	354	322
fc' (Mpa)	25	25	25	25	25	25
fy (Mpa)	360	360	360	360	360	360
b (mm)	400	400	400	400	400	400
h (mm)	400	400	400	400	400	400
d' (mm)	60	60	60	60	60	60
d (mm)	340	340	340	340	340	340
ρg (%)	***1.5%***	***1.5%***	***1.5%***	***1.5%***	***1.5%***	***1.5%***
Ast (mm2)	2400	2400	2400	2400	2400	2400
As=As' (mm2)	1200	1200	1200	1200	1200	1200
Ø tul (mm)	***22***	***22***	***22***	***22***	***22***	***22***
A1Ø (mm2)	380	380	380	380	380	380
n (btg)	3.2	3.2	3.2	3.2	3.2	3.2
n (btg)	***4***	***4***	***4***	***4***	***4***	***4***
Asada=As'ada	1521	1521	1521	1521	1521	1521
xb (mm)	212.5	212.5	212.5	212.5	212.5	212.5
ab (mm)	180.625	180.625	180.625	180.625	180.625	180.625
fs' (Mpa)	431	431	431	431	431	431
fs' pakai (Mpa	360	360	360	360	360	360
Ccb (N)	1535313	1535313	1535313	1535313	1535313	1535313
Csb (N)	515080	515080	515080	515080	515080	515080
Tsb (N)	547391	547391	547391	547391	547391	547391
Pnb (KN)	1503	1503	1503	1503	1503	1503
Mnb (KNm)	317	317	317	317	317	317
eb (m)	0.211	0.211	0.211	0.211	0.211	0.211
e (m)	0.309	0.294	0.460	0.362	0.561	0.474
Cek Patah	Pth Tarik	Pth Tarik	Pth Tarik	Pth Tarik	Pth Tarik	Pth Tarik
Pn (KN)	3586	3586	3583	3585	3582	3583
Mn (KNm)	1106	1055	1647	1296	2009	1697
Kontrol (Mn -	**Ok !**	**Ok !**	**Ok !**	**Ok !**	**Ok !**	**Ok !**

Perencanaan Tulangan memanjang Kolom

Kolom	As B -9 / As B - 10					
Lantai	Dasar		1		2	
Arah	x	y	x	y	x	y
Mu (KNm)	101	337	96	209	54	194
Pu (KNm)	772	819	402	421	207	231
Mu,k/Ø (KNm	155	518	148	322	83	298
Pu,k/Ø (KN)	1188	1260	618	648	318	355
fc' (Mpa)	22.5	22.5	22.5	22.5	22.5	22.5
fy (Mpa)	360	360	360	360	360	360
b (mm)	400	400	400	400	400	400
h (mm)	400	400	400	400	400	400
d' (mm)	60	60	60	60	60	60
d (mm)	340	340	340	340	340	340
ρg (%)	***1.0%***	***2.5%***	***1.0%***	***2.0%***	***1.0%***	***2.0%***
Ast (mm2)	1600	4000	1600	3200	1600	3200
As=As' (mm2)	800	2000	800	1600	800	1600
Ø tul (mm)	***22***	***22***	***22***	***22***	***22***	***22***
A1Ø (mm2)	380	380	380	380	380	380
n (btg)	2.1	5.3	2.1	4.2	2.1	4.2
n (btg)	***3***	***6***	***3***	***5***	***3***	***5***
Asada=As'ada	1140	2281	1140	1901	1140	1901
xb (mm)	212.5	212.5	212.5	212.5	212.5	212.5
ab (mm)	180.625	180.625	180.625	180.625	180.625	180.625
fs' (Mpa)	431	431	431	431	431	431
fs' pakai (Mpa	360	360	360	360	360	360
Ccb (N)	1381781	1381781	1381781	1381781	1381781	1381781
Csb (N)	388733	777466	388733	647889	388733	647889
Tsb (N)	410543	821087	410543	684239	410543	684239
Pnb (KN)	1360	1338	1360	1345	1360	1345
Mnb (KNm)	263	375	263	338	263	338
eb (m)	0.194	0.281	0.194	0.251	0.194	0.251
e (m)	0.131	0.411	0.239	0.496	0.261	0.840
Cek Patah	Pth Desak	Pth Tarik	Pth Tarik	Pth Tarik	Pth Tarik	Pth Tarik
Pn (KN)	1843	3244	3246	3243	3246	3238
Mn (KNm)	241	1335	775	1610	847	2719
Kontrol (Mn -	**Ok !**	**Ok !**	**Ok !**	**Ok !**	**Ok !**	**Ok !**

Perencanaan Tulangan memanjang Kolom

Kolom	As C -9 / As C - 10					
Lantai	Dasar		1		2	
Arah	x	y	x	y	x	y
Mu (KNm)	101	337	96	209	54	194
Pu (KNm)	772	819	402	421	207	231
Mu,k/Ø (KNm	155	518	148	322	83	298
Pu,k/Ø (KN)	1188	1260	618	648	318	355
fc' (Mpa)	22.5	22.5	22.5	22.5	22.5	22.5
fy (Mpa)	360	360	360	360	360	360
b (mm)	400	400	400	400	400	400
h (mm)	400	400	400	400	400	400
d' (mm)	60	60	60	60	60	60
d (mm)	340	340	340	340	340	340
ρg (%)	***1.0%***	***2.5%***	***1.0%***	***2.0%***	***1.0%***	***2.0%***
Ast (mm2)	1600	4000	1600	3200	1600	3200
As=As' (mm2)	800	2000	800	1600	800	1600
Ø tul (mm)	***22***	***22***	***22***	***22***	***22***	***22***
A1Ø (mm2)	380	380	380	380	380	380
n (btg)	2.1	5.3	2.1	4.2	2.1	4.2
n (btg)	***3***	***6***	***3***	***5***	***3***	***5***
Asada=As'ada	1140	2281	1140	1901	1140	1901
xb (mm)	212.5	212.5	212.5	212.5	212.5	212.5
ab (mm)	180.625	180.625	180.625	180.625	180.625	180.625
fs' (Mpa)	431	431	431	431	431	431
fs' pakai (Mpa	360	360	360	360	360	360
Ccb (N)	1381781	1381781	1381781	1381781	1381781	1381781
Csb (N)	388733	777466	388733	647889	388733	647889
Tsb (N)	410543	821087	410543	684239	410543	684239
Pnb (KN)	1360	1338	1360	1345	1360	1345
Mnb (KNm)	263	375	263	338	263	338
eb (m)	0.194	0.281	0.194	0.251	0.194	0.251
e (m)	0.131	0.411	0.239	0.496	0.261	0.840
Cek Patah	Pth Desak	Pth Tarik	Pth Tarik	Pth Tarik	Pth Tarik	Pth Tarik
Pn (KN)	1843	3244	3246	3243	3246	3238
Mn (KNm)	241	1335	775	1610	847	2719
Kontrol (Mn -	**Ok !**	**Ok !**	**Ok !**	**Ok !**	**Ok !**	**Ok !**

Perencanaan Tulangan memanjang Kolom

Kolom	As E -9 / As E - 10					
Lantai	Dasar		1		2	
Arah	x	y	x	y	x	y
Mu (KNm)	227	279	218	295	216	246
Pu (KNm)	1049	801	783	421	410	235
Mu,k/Ø (KNm	349	429	335	454	332	378
Pu,k/Ø (KN)	1614	1232	1205	648	631	362
fc' (Mpa)	22.5	22.5	22.5	22.5	22.5	22.5
fy (Mpa)	360	360	360	360	360	360
b (mm)	400	400	400	400	400	400
h (mm)	400	400	400	400	400	400
d' (mm)	60	60	60	60	60	60
d (mm)	340	340	340	340	340	340
ρg (%)	***2.5%***	***2.5%***	***2.0%***	***2.0%***	***2.0%***	***2.0%***
Ast (mm2)	4000	4000	3200	3200	3200	3200
As=As' (mm2)	2000	2000	1600	1600	1600	1600
Ø tul (mm)	***22***	***22***	***22***	***22***	***22***	***22***
A1Ø (mm2)	380	380	380	380	380	380
n (btg)	5.3	5.3	4.2	4.2	4.2	4.2
n (btg)	***6***	***6***	***5***	***5***	***5***	***5***
Asada=As'ada	2281	2281	1901	1901	1901	1901
xb (mm)	212.5	212.5	212.5	212.5	212.5	212.5
ab (mm)	180.625	180.625	180.625	180.625	180.625	180.625
fs' (Mpa)	431	431	431	431	431	431
fs' pakai (Mpa	360	360	360	360	360	360
Ccb (N)	1381781	1381781	1381781	1381781	1381781	1381781
Csb (N)	777466	777466	647889	647889	647889	647889
Tsb (N)	821087	821087	684239	684239	684239	684239
Pnb (KN)	1338	1338	1345	1345	1345	1345
Mnb (KNm)	375	375	338	338	338	338
eb (m)	0.281	0.281	0.251	0.251	0.251	0.251
e (m)	0.216	0.348	0.278	0.701	0.527	1.047
Cek Patah	Pth Desak	Pth Tarik	Pth Tarik	Pth Tarik	Pth Tarik	Pth Tarik
Pn (KN)	1696	3245	3246	3240	3242	3235
Mn (KNm)	367	1130	904	2270	1708	3386
Kontrol (Mn -	**Ok !**	**Ok !**	**Ok !**	**Ok !**	**Ok !**	**Ok !**

Perencanaan Tulangan memanjang Kolom

Kolom	As F -9 / As F - 10					
Lantai	Dasar		1		2	
Arah	x	y	x	y	x	y
Mu (KNm)	227	279	218	295	316	246
Pu (KNm)	1149	801	783	421	410	235
Mu,k/Ø (KNm	349	429	335	454	486	378
Pu,k/Ø (KN)	1768	1232	1205	648	631	362
fc' (Mpa)	22.5	22.5	22.5	22.5	22.5	22.5
fy (Mpa)	360	360	360	360	360	360
b (mm)	400	400	400	400	400	400
h (mm)	400	400	400	400	400	400
d' (mm)	60	60	60	60	60	60
d (mm)	340	340	340	340	340	340
ρg (%)	***2.5%***	***2.5%***	***2.0%***	***2.0%***	***2.0%***	***2.0%***
Ast (mm2)	4000	4000	3200	3200	3200	3200
As=As' (mm2)	2000	2000	1600	1600	1600	1600
Ø tul (mm)	***22***	***22***	***22***	***22***	***22***	***22***
A1Ø (mm2)	380	380	380	380	380	380
n (btg)	5.3	5.3	4.2	4.2	4.2	4.2
n (btg)	***6***	***6***	***5***	***5***	***5***	***5***
Asada=As'ada	2281	2281	1901	1901	1901	1901
xb (mm)	212.5	212.5	212.5	212.5	212.5	212.5
ab (mm)	180.625	180.625	180.625	180.625	180.625	180.625
fs' (Mpa)	431	431	431	431	431	431
fs' pakai (Mpa	360	360	360	360	360	360
Ccb (N)	1381781	1381781	1381781	1381781	1381781	1381781
Csb (N)	777466	777466	647889	647889	647889	647889
Tsb (N)	821087	821087	684239	684239	684239	684239
Pnb (KN)	1338	1338	1345	1345	1345	1345
Mnb (KNm)	375	375	338	338	338	338
eb (m)	0.281	0.281	0.251	0.251	0.251	0.251
e (m)	0.198	0.348	0.278	0.701	0.771	1.047
Cek Patah	Pth Desak	Pth Tarik	Pth Tarik	Pth Tarik	Pth Tarik	Pth Tarik
Pn (KN)	1795	3245	3246	3240	3239	3235
Mn (KNm)	355	1130	904	2270	2496	3386
Kontrol (Mn -	**Ok !**	**Ok !**	**Ok !**	**Ok !**	**Ok !**	**Ok !**

Perencanaan Tulangan memanjang Kolom

Kolom	As G -9 / As G - 10					
Lantai	Dasar		1		2	
Arah	x	y	x	y	x	y
Mu (KNm)	226	189	219	176	138	147
Pu (KNm)	1149	1132	783	766	410	404
Mu,k/Ø (KNm	348	291	337	271	212	226
Pu,k/Ø (KN)	1768	1742	1205	1178	631	622
fc' (Mpa)	22.5	22.5	22.5	22.5	22.5	22.5
fy (Mpa)	360	360	360	360	360	360
b (mm)	400	400	400	400	400	400
h (mm)	400	400	400	400	400	400
d' (mm)	60	60	60	60	60	60
d (mm)	340	340	340	340	340	340
ρg (%)	***2.5%***	***2.5%***	***1.5%***	***1.5%***	***1.5%***	***1.5%***
Ast (mm2)	4000	4000	2400	2400	2400	2400
As=As' (mm2	2000	2000	1200	1200	1200	1200
Ø tul (mm)	***22***	***22***	***22***	***22***	***22***	***22***
A1Ø (mm2)	380	380	380	380	380	380
n (btg)	5.3	5.3	3.2	3.2	3.2	3.2
n (btg)	***6***	***6***	***4***	***4***	***4***	***4***
Asada=As'ada	2281	2281	1521	1521	1521	1521
xb (mm)	212.5	212.5	212.5	212.5	212.5	212.5
ab (mm)	180.625	180.625	180.625	180.625	180.625	180.625
fs' (Mpa)	431	431	431	431	431	431
fs' pakai (Mpa	360	360	360	360	360	360
Ccb (N)	1381781	1381781	1381781	1381781	1381781	1381781
Csb (N)	777466	777466	518311	518311	518311	518311
Tsb (N)	821087	821087	547391	547391	547391	547391
Pnb (KN)	1338	1338	1353	1353	1353	1353
Mnb (KNm)	375	375	301	301	301	301
eb (m)	0.281	0.281	0.222	0.222	0.222	0.222
e (m)	0.197	0.167	0.280	0.230	0.337	0.364
Cek Patah	Pth Desak	Pth Desak	Pth Tarik	Pth Tarik	Pth Tarik	Pth Tarik
Pn (KN)	1800	1985	3246	3247	3245	3245
Mn (KNm)	354	331	908	746	1092	1181
Kontrol (Mn -	**Ok !**	**Ok !**	**Ok !**	**Ok !**	**Ok !**	**Ok !**

PERHITUNGAN JUMLAH TIANG PANCANG

berat tanah urug = 0,5.2,4.2,4.18 = 52 KN
berat poer =2,4.2,4.1.24 = 138 KN

titik pondasi	Ap cm²	As cm	P KN	P total	Data Sndr	qc (5D-8D) Kg/cm²	qc 3D Kg/cm²	qc Kg/cm²	JHP Kg/cm	Qp KN	Qs KN	Q all KN	n tiang	tiang pak	Eff Eg	Qijin KN	cek
A - 7	625	100	718	908	S4	210	250	230	230	1437.5	230	525.2	1.7	4	0.887	1972.1	Ok
A - 8	625	100	1074	1264	S4	210	250	230	230	1437.5	230	525.2	2.4	4	0.887	1972.1	Ok
A - 9	625	100	865	1055	S4	210	250	230	230	1437.5	230	525.2	2.0	4	0.887	1972.1	Ok
A - 10	625	100	868	1058	S4	210	250	230	230	1437.5	230	525.2	2.0	4	0.887	1972.1	Ok
A - 11	625	100	1120	1310	S4	210	250	230	230	1437.5	230	525.2	2.5	4	0.887	1972.1	Ok
A - 12	625	100	840	1030	S4	210	250	230	230	1437.5	230	525.2	2.0	4	0.887	1972.1	Ok
B - 7	625	100	1137	1327	S4	210	250	230	230	1437.5	230	525.2	2.5	4	0.887	1972.1	Ok
B - 8	625	100	1543	1733	S4	210	250	230	230	1437.5	230	525.2	3.3	4	0.887	1972.1	Ok
B - 9	625	100	1001	1191	S4	210	250	230	230	1437.5	230	525.2	2.3	4	0.887	1972.1	Ok
B - 10	625	100	1005	1195	S4	210	250	230	230	1437.5	230	525.2	2.3	4	0.887	1972.1	Ok
B - 11	625	100	1545	1735	S4	210	250	230	230	1437.5	230	525.2	3.3	4	0.887	1972.1	Ok
B - 12	625	100	1401	1591	S4	210	250	230	230	1437.5	230	525.2	3.0	4	0.887	1972.1	Ok
C - 7	625	100	1109	1299	S4	210	250	230	230	1437.5	230	525.2	2.5	4	0.887	1972.1	Ok
C - 8	625	100	1510	1700	S4	210	250	230	230	1437.5	230	525.2	3.2	4	0.887	1972.1	Ok
C - 9	625	100	966	1156	S4	210	250	230	230	1437.5	230	525.2	2.2	4	0.887	1972.1	Ok
C - 10	625	100	970	1160	S4	210	250	230	230	1437.5	230	525.2	2.2	4	0.887	1972.1	Ok
C - 11	625	100	1609	1799	S4	210	250	230	230	1437.5	230	525.2	3.4	4	0.887	1972.1	Ok
C - 12	625	100	1366	1556	S4	210	250	230	230	1437.5	230	525.2	3.0	4	0.887	1972.1	Ok
D - 7	625	100	1103	1293	S4	210	250	230	230	1437.5	230	525.2	2.5	4	0.887	1972.1	Ok
D - 8	625	100	1499	1689	S4	210	250	230	230	1437.5	230	525.2	3.2	4	0.887	1972.1	Ok
D - 9	625	100	1258	1448	S4	210	250	230	230	1437.5	230	525.2	2.8	4	0.887	1972.1	Ok
D - 10	625	100	1262	1452	S4	210	250	230	230	1437.5	230	525.2	2.8	4	0.887	1972.1	Ok
D - 11	625	100	1599	1789	S4	210	250	230	230	1437.5	230	525.2	3.4	4	0.887	1972.1	Ok
D - 12	625	100	1361	1551	S4	210	250	230	230	1437.5	230	525.2	3.0	4	0.887	1972.1	Ok
E - 7	625	100	1100	1290	S2	155	250	202.5	320	1265.625	320	485.9	2.7	4	0.887	1875.3	Ok
E - 8	625	100	1493	1683	S2	155	250	202.5	320	1265.625	320	485.9	3.5	4	0.887	1875.3	Ok
E - 9	625	100	1397	1587	S2	155	250	202.5	320	1265.625	320	485.9	3.3	4	0.887	1875.3	Ok
E - 10	625	100	1340	1530	S2	155	250	202.5	320	1265.625	320	485.9	3.1	4	0.887	1875.3	Ok
E - 11	625	100	1491	1681	S2	155	250	202.5	320	1265.625	320	485.9	3.5	4	0.887	1875.3	Ok

PERHITUNGAN JUMLAH TIANG PANCANG

berat tanah urug = 0,75.2,4.2,4.18 = 78 KN

berat poer =2,4.2.4.0,6.24 = 83 KN

titik pondasi	Ap cm²	As cm	P KN	P total	Data Sondir	qc (5D-8D) Kg/cm²	qc 3D Kg/cm²	qc Kg/cm²	JHP Kg/cm	Qp KN	Qs KN	Q all KN	n tiang	tiang pakai	Efisiensi Eg	Qijin KN	cek
E - 12	625	100	1357	1547	S2	155	250	202.5	320	1265.625	320	485.9	3.2	4	0.887	1875.3	Ok
F - 7	625	100	1128	1318	S2	155	250	202.5	320	1265.625	320	485.9	2.7	4	0.887	1875.3	Ok
F - 8	625	100	1526	1716	S2	155	250	202.5	320	1265.625	320	485.9	3.5	4	0.887	1875.3	Ok
F - 9	625	100	1428	1618	S2	155	250	202.5	320	1265.625	320	485.9	3.3	4	0.887	1875.3	Ok
F - 10	625	100	1431	1621	S2	155	250	202.5	320	1265.625	320	485.9	3.3	4	0.887	1875.3	Ok
F - 11	625	100	1428	1618	S2	155	250	202.5	320	1265.625	320	485.9	3.3	4	0.887	1875.3	Ok
F - 12	625	100	1392	1582	S2	155	250	202.5	320	1265.625	320	485.9	3.3	4	0.887	1875.3	Ok
G - 7	625	100	732	922	S2	155	250	202.5	320	1265.625	320	485.9	1.9	4	0.887	1875.3	Ok
G - 8	625	100	1117	1307	S2	155	250	202.5	320	1265.625	320	485.9	2.7	4	0.887	1875.3	Ok
G - 9	625	100	1042	1232	S2	155	250	202.5	320	1265.625	320	485.9	2.5	4	0.887	1875.3	Ok
G - 10	625	100	1044	1234	S2	155	250	202.5	320	1265.625	320	485.9	2.5	4	0.887	1875.3	Ok
G - 11	625	100	1164	1354	S2	155	250	202.5	320	1265.625	320	485.9	2.8	4	0.887	1875.3	Ok
G - 12	625	100	855	1045	S2	155	250	202.5	320	1265.625	320	485.9	2.2	4	0.887	1875.3	Ok

LAMPIRAN 12

TABEL PERHITUNGAN GESER PILE CAP

Perhitungan Geser Pile Cap

															GESER SATU ARAH				GESER PONS			
titik pondasi	tiang pak	P tot	Mx	My	Bx mm	By mm	h mm	d mm	Xi	Yi	ΣX²	ΣY²	P mak	n	Vu	Vu/Φ	Vc	Cek	βo	bo mm	Vc	Cek
A - 7	4	908	19.8	19.8	2400	2400	1000	910	0.7	0.7	2.0	2.0	247	2	494	824	1,727	OK	1	5240	5,831	OK
A - 8	4	1264	26.1	19.9	2400	2400	1000	910	0.7	0.7	2.0	2.0	339	2	679	1,132	1,727	OK	1	5240	5,831	OK
A - 9	4	1055	24.9	20.5	2400	2400	1000	910	0.7	0.7	2.0	2.0	287	2	574	956	1,727	OK	1	5240	5,831	OK
A - 10	4	1058	24.4	20.5	2400	2400	1000	910	0.7	0.7	2.0	2.0	287	2	575	958	1,727	OK	1	5240	5,831	OK
A - 11	4	1310	24.6	20.0	2400	2400	1000	910	0.7	0.7	2.0	2.0	350	2	701	1,168	1,727	OK	1	5240	5,831	OK
A - 12	4	1030	24.2	20.7	2400	2400	1000	910	0.7	0.7	2.0	2.0	280	2	561	935	1,727	OK	1	5240	5,831	OK
B - 7	5	1327	20.7	25.3	2400	2400	1000	910	0.7	0.7	2.0	2.0	289	2	578	963	1,727	OK	1	5240	5,831	OK
B - 8	5	1733	27.4	24.0	2400	2400	1000	910	0.7	0.7	2.0	2.0	373	2	746	1,243	1,727	OK	1	5240	5,831	OK
B - 9	5	1191	27.6	19.8	2400	2400	1000	910	0.7	0.7	2.0	2.0	262	2	525	875	1,727	OK	1	5240	5,831	OK
B - 10	5	1195	26.4	19.8	2400	2400	1000	910	0.7	0.7	2.0	2.0	263	2	525	875	1,727	OK	1	5240	5,831	OK
B - 11	5	1735	26.7	20.1	2400	2400	1000	910	0.7	0.7	2.0	2.0	371	2	742	1,236	1,727	OK	1	5240	5,831	OK
B - 12	5	1591	28.2	24.0	2400	2400	1000	910	0.7	0.7	2.0	2.0	345	2	690	1,149	1,727	OK	1	5240	5,831	OK
C - 7	5	1299	23.8	25.3	2400	2400	1000	910	0.7	0.7	2.0	2.0	285	2	570	950	1,727	OK	1	5240	5,831	OK
C - 8	5	1700	24.7	24.3	2400	2400	1000	910	0.7	0.7	2.0	2.0	365	2	730	1,217	1,727	OK	1	5240	5,831	OK
C - 9	5	1156	24.0	23.2	2400	2400	1000	910	0.7	0.7	2.0	2.0	255	2	511	851	1,727	OK	1	5240	5,831	OK
C - 10	5	1160	30.8	20.4	2400	2400	1000	910	0.7	0.7	2.0	2.0	258	2	516	860	1,727	OK	1	5240	5,831	OK
C - 11	5	1799	31.3	20.4	2400	2400	1000	910	0.7	0.7	2.0	2.0	386	2	772	1,287	1,727	OK	1	5240	5,831	OK
C - 12	5	1556	29.6	23.2	2400	2400	1000	910	0.7	0.7	2.0	2.0	338	2	676	1,127	1,727	OK	1	5240	5,831	OK
D - 7	5	1293	31.3	24.3	2400	2400	1000	910	0.7	0.7	2.0	2.0	287	2	574	957	1,727	OK	1	5240	5,881	OK
D - 8	5	1689	29.5	24.2	2400	2400	1000	910	0.7	0.7	2.0	2.0	365	2	730	1,217	1,727	OK	1	5240	5,881	OK
D - 9	5	1448	30.1	23.0	2400	2400	1000	910	0.7	0.7	2.0	2.0	317	2	633	1,056	1,727	OK	1	5240	5,881	OK
D - 10	5	1452	30.2	20.6	2400	2400	1000	910	0.7	0.7	2.0	2.0	316	2	633	1,054	1,727	OK	1	5240	5,881	OK
D - 11	5	1789	32.0	20.6	2400	2400	1000	910	0.7	0.7	2.0	2.0	385	2	769	1,282	1,727	OK	1	5240	5,881	OK
D - 12	5	1551	26.7	23.0	2400	2400	1000	910	0.7	0.7	2.0	2.0	336	2	671	1,119	1,727	OK	1	5240	5,881	OK
E - 7	5	1290	22.6	24.1	2400	2400	1000	910	0.7	0.7	2.0	2.0	282	2	564	939	1,727	OK	1	5240	5,881	OK
E - 8	5	1683	28.3	24.0	2400	2400	1000	910	0.7	0.7	2.0	2.0	363	2	727	1,211	1,727	OK	1	5240	5,881	OK
E - 9	5	1587	28.3	22.9	2400	2400	1000	910	0.7	0.7	2.0	2.0	344	2	687	1,145	1,727	OK	1	5240	5,881	OK
E - 10	5	1530	28.0	20.8	2400	2400	1000	910	0.7	0.7	2.0	2.0	331	2	662	1,103	1,727	OK	1	5240	5,881	OK
E - 11	5	1681	28.7	24.3	2400	2400	1000	910	0.7	0.7	2.0	2.0	363	2	726	1,211	1,727	OK	1	5240	5,881	OK
E - 12	5	1547	28.8	24.4	2400	2400	1000	910	0.7	0.7	2.0	2.0	337	2	673	1,122	1,727	OK	1	5240	5,881	OK
F - 7	5	1318	28.9	24.5	2400	2400	1000	910	0.7	0.7	2.0	2.0	291	2	582	970	1,727	OK	1	5240	5,881	OK
F - 8	5	1716	29.0	24.6	2400	2400	1000	910	0.7	0.7	2.0	2.0	371	2	741	1,235	1,727	OK	1	5240	5,881	OK
F - 9	5	1618	29.1	24.7	2400	2400	1000	910	0.7	0.7	2.0	2.0	351	2	702	1,170	1,727	OK	1	5240	5,881	OK
F - 10	5	1621	29.2	24.8	2400	2400	1000	910	0.7	0.7	2.0	2.0	352	2	704	1,173	1,727	OK	1	5240	5,881	OK
F - 11	5	1618	29.3	24.9	2400	2400	1000	910	0.7	0.7	2.0	2.0	351	2	703	1,171	1,727	OK	1	5240	5,881	OK
F - 12	5	1582	29.4	25.1	2400	2400	1000	910	0.7	0.7	2.0	2.0	344	2	688	1,147	1,727	OK	1	5240	5,881	OK
G - 7	4	922	29.5	25.2	2400	2400	1000	910	0.7	0.7	2.0	2.0	258	2	517	861	1,727	OK	1	5240	5,881	OK
G - 8	4	1307	29.6	25.3	2400	2400	1000	910	0.7	0.7	2.0	2.0	355	2	710	1,183	1,727	OK	1	5240	5,881	OK
G - 9	4	1232	29.8	25.4	2400	2400	1000	910	0.7	0.7	2.0	2.0	336	2	672	1,120	1,727	OK	1	5240	5,881	OK
G - 10	4	1234	29.9	25.5	2400	2400	1000	910	0.7	0.7	2.0	2.0	337	2	673	1,122	1,727	OK	1	5240	5,881	OK
G - 11	4	1354	30.0	25.6	2400	2400	1000	910	0.7	0.7	2.0	2.0	367	2	734	1,223	1,727	OK	1	5240	5,881	OK
G - 12	4	1045	30.1	25.7	2400	2400	1000	910	0.7	0.7	2.0	2.0	290	2	579	966	1,727	OK	1	5240	5,881	OK

LAMPIRAN 13

TABEL PERHITUNGAN TULANGAN PILE CAP

Perhitungan Tulangan Pile Cap

titik pondasi	P mak	JPT ke PP	Mu	Mu/Ø	d	m	Rn	ρ min	ρ maks	ρ ada	1.33 ρ ada	ρ pakai	As perlu	AØ1	s	tul pakai	As ada	a	Mn	As bagi	AØ1	s bagi	tul pakai
A - 7	247	0.7	346	433	910	18.8	0.5	0.00389	0.0212	0.0015	0.00196	0.002	1781	284	159	D19-100	2840	53.5	903	1200	201	167.5	P16-160
A - 8	339	0.7	475	594	910	18.8	0.7	0.00389	0.0212	0.002	0.0027	0.0027	2459	284	116	D19-100	2840	53.5	903	1200	201	167.5	P16-160
A - 9	287	0.7	402	502	910	18.8	0.6	0.00389	0.0212	0.0017	0.00228	0.0023	2072	284	137	D19-100	2840	53.5	903	1200	201	167.5	P16-160
A - 10	287	0.7	402	503	910	18.8	0.6	0.00389	0.0212	0.0017	0.00228	0.0023	2075	284	137	D19-100	2840	53.5	903	1200	201	167.5	P16-160
A - 11	350	0.7	490	613	910	18.8	0.7	0.00389	0.0212	0.0021	0.00279	0.0028	2539	284	112	D19-100	2840	53.5	903	1200	201	167.5	P16-160
A - 12	280	0.7	393	491	910	18.8	0.6	0.00389	0.0212	0.0017	0.00222	0.0022	2024	284	140	D19-100	2840	53.5	903	1200	201	167.5	P16-160
B - 7	289	0.7	404	506	910	18.8	0.6	0.00389	0.0212	0.0017	0.00229	0.0023	2086	284	136	D19-100	2840	53.5	903	1200	201	167.5	P16-160
B - 8	373	0.7	522	652	910	18.8	0.8	0.00389	0.0212	0.0022	0.00297	0.003	2706	284	105	D19-100	2840	53.5	903	1200	201	167.5	P16-160
B - 9	262	0.7	367	459	910	18.8	0.6	0.00389	0.0212	0.0016	0.00208	0.0021	1892	284	150	D19-100	2840	53.5	903	1200	201	167.5	P16-160
B - 10	263	0.7	368	460	910	18.8	0.6	0.00389	0.0212	0.0016	0.00208	0.0021	1893	284	150	D19-100	2840	53.5	903	1200	201	167.5	P16-160
B - 11	371	0.7	519	649	910	18.8	0.8	0.00389	0.0212	0.0022	0.00296	0.003	2691	284	106	D19-100	2840	53.5	903	1200	201	167.5	P16-160
B - 12	345	0.7	483	603	910	18.8	0.7	0.00389	0.0212	0.0021	0.00275	0.0027	2498	284	114	D19-100	2840	53.5	903	1200	201	167.5	P16-160
C - 7	285	0.7	399	498	910	18.8	0.6	0.00389	0.0212	0.0017	0.00226	0.0023	2057	284	138	D19-100	2840	53.5	903	1200	201	167.5	P16-160
C - 8	365	0.7	511	639	910	18.8	0.8	0.00389	0.0212	0.0022	0.00291	0.0029	2648	284	107	D19-100	2840	53.5	903	1200	201	167.5	P16-160
C - 9	255	0.7	357	447	910	18.8	0.5	0.00389	0.0212	0.0015	0.00202	0.002	1840	284	154	D19-100	2840	53.5	903	1200	201	167.5	P16-160
C - 10	258	0.7	361	452	910	18.8	0.5	0.00389	0.0212	0.0015	0.00204	0.002	1861	284	153	D19-100	2840	53.5	903	1200	201	167.5	P16-160
C - 11	386	0.7	541	676	910	18.8	0.8	0.00389	0.0212	0.0023	0.00308	0.0031	2805	284	101	D19-100	2840	53.5	903	1200	201	167.5	P16-160
C - 12	338	0.7	473	592	910	18.8	0.7	0.00389	0.0212	0.002	0.00269	0.0027	2449	284	116	D19-100	2840	53.5	903	1200	201	167.5	P16-160
D - 7	287	0.7	402	502	910	18.8	0.6	0.00389	0.0212	0.0017	0.00228	0.0023	2072	284	137	D19-100	2840	53.5	903	1200	201	167.5	P16-160
D - 8	365	0.7	511	639	910	18.8	0.8	0.00389	0.0212	0.0022	0.00291	0.0029	2649	284	107	D19-100	2840	53.5	903	1200	201	167.5	P16-160
D - 9	317	0.7	443	554	910	18.8	0.7	0.00389	0.0212	0.0019	0.00252	0.0025	2291	284	124	D19-100	2840	53.5	903	1200	201	167.5	P16-160
D - 10	316	0.7	443	554	910	18.8	0.7	0.00389	0.0212	0.0019	0.00251	0.0025	2288	284	124	D19-100	2840	53.5	903	1200	201	167.5	P16-160
D - 11	385	0.7	538	673	910	18.8	0.8	0.00389	0.0212	0.0023	0.00307	0.0031	2793	284	102	D19-100	2840	53.5	903	1200	201	167.5	P16-160
D - 12	336	0.7	470	587	910	18.8	0.7	0.00389	0.0212	0.002	0.00267	0.0027	2430	284	117	D19-100	2840	53.5	903	1200	201	167.5	P16-160
E - 7	282	0.7	395	493	910	18.8	0.6	0.00389	0.0212	0.0017	0.00224	0.0022	2034	284	140	D19-100	2840	53.5	903	1200	201	167.5	P16-160
E - 8	363	0.7	509	636	910	18.8	0.8	0.00389	0.0212	0.0022	0.0029	0.0029	2635	284	108	D19-100	2840	53.5	903	1200	201	167.5	P16-160
E - 9	344	0.7	481	601	910	18.8	0.7	0.00389	0.0212	0.0021	0.00273	0.0027	2489	284	114	D19-100	2840	53.5	903	1200	201	167.5	P16-160
E - 10	331	0.7	463	579	910	18.8	0.7	0.00389	0.0212	0.002	0.00263	0.0026	2396	284	119	D19-100	2840	53.5	903	1200	201	167.5	P16-160
E - 11	363	0.7	509	636	910	18.8	0.8	0.00389	0.0212	0.0022	0.0029	0.0029	2635	284	108	D19-100	2840	53.5	903	1200	201	167.5	P16-160
E - 12	337	0.7	471	589	910	18.8	0.7	0.00389	0.0212	0.002	0.00268	0.0027	2437	284	117	D19-100	2840	53.5	903	1200	201	167.5	P16-160
F - 7	291	0.7	407	509	910	18.8	0.6	0.00389	0.0212	0.0017	0.00231	0.0023	2101	284	135	D19-100	2840	53.5	903	1200	201	167.5	P16-160
F - 8	371	0.7	519	648	910	18.8	0.8	0.00389	0.0212	0.0022	0.00295	0.003	2689	284	106	D19-100	2840	53.5	903	1200	201	167.5	P16-160
F - 9	351	0.7	491	614	910	18.8	0.7	0.00389	0.0212	0.0021	0.0028	0.0028	2545	284	112	D19-100	2840	53.5	903	1200	201	167.5	P16-160
F - 10	352	0.7	492	616	910	18.8	0.7	0.00389	0.0212	0.0021	0.0028	0.0028	2550	284	111	D19-100	2840	53.5	903	1200	201	167.5	P16-160
F - 11	351	0.7	492	615	910	18.8	0.7	0.00389	0.0212	0.0021	0.0028	0.0028	2546	284	112	D19-100	2840	53.5	903	1200	201	167.5	P16-160
F - 12	344	0.7	482	602	910	18.8	0.7	0.00389	0.0212	0.0021	0.00274	0.0027	2494	284	114	D19-100	2840	53.5	903	1200	201	167.5	P16-160
G - 7	258	0.7	362	452	910	18.8	0.5	0.00389	0.0212	0.0015	0.00205	0.002	1863	284	152	D19-100	2840	53.5	903	1200	201	167.5	P16-160
G - 8	355	0.7	497	621	910	18.8	0.7	0.00389	0.0212	0.0021	0.00283	0.0028	2572	284	110	D19-100	2840	53.5	903	1200	201	167.5	P16-160
G - 9	336	0.7	471	588	910	18.8	0.7	0.00389	0.0212	0.002	0.00267	0.0027	2434	284	117	D19-100	2840	53.5	903	1200	201	167.5	P16-160
G - 10	337	0.7	471	589	910	18.8	0.7	0.00389	0.0212	0.002	0.00268	0.0027	2439	284	116	D19-100	2840	53.5	903	1200	201	167.5	P16-160
G - 11	367	0.7	514	642	910	18.8	0.8	0.00389	0.0212	0.0022	0.00292	0.0029	2661	284	107	D19-100	2840	53.5	903	1200	201	167.5	P16-160
G - 12	290	0.7	406	507	910	18.8	0.6	0.00389	0.0212	0.0017	0.0023	0.0023	2092	284	136	D19-100	2840	53.5	903	1200	201	167.5	P16-160

LAMPIRAN 14

TABEL PERENCANAAN PONDASI SETEMPAT

Tabel Perencanaan Pondasi

Pondasi	**PS 1**	**PS 2**	**PS 3**
σ tanah (KN/m2)	250	250	250
f'c (MPa)	22.5	22.5	22.5
fy (MPa)	360	360	360
γb beton (KN/m3)	24	24	24
γb tanah (KN/m3)	16.123	16.123	16.123
P (KN)	***308***	***308***	***150.8***
Mx tetap (KNm)	***6.8***	***6.8***	***4.45***
My tetap (KNm)	***6.05***	***6.05***	***12.23***
Mx sementara (KNm)	***23.39***	***23.39***	***22.6***
My sementara (KNm)	***6.85***	***6.85***	***9.7***
h kolom (m)	1.5	1.5	1.5
bk (m)	0.4	0.4	0.4
hk (m)	0.4	0.4	0.4
tebal pelat (tf) (m)	0.4	0.4	0.4
σ netto tanah (KN/m2)	216	216	216
Tinjauan Beban Tetap			
Dicoba nilai Bx = By (m)	***1.4***	***1.4***	***1.4***
A (m2)	1.96	1.96	1.96
σ terjadi (KN/m2)	185	185	113
σ terjadi (KN/m2)	129	129	40
Kontrol tegangan	**Ok !**	**Ok !**	**Ok !**
Tinj Beban Sementr			
ex (m)	0.0222	0.0222	0.0643
ey (m)	0.0759	0.0759	0.1499
B/6 (m)	0.23	0.23	0.23
1.5.σnetto tanah(KN/m2)	324.323	324.323	324.323
σ terjadi (KN/m2)	223.265	223.265	147.566
Kontrol tegangan	**Ok !**	**Ok !**	**Ok !**
Geser satu arah			
d (m)	0.3	0.3	0.3
m atau n (m)	0.2	0.2	0.2
q tjd max (KN/m2)	208	208	126
q tjd min (KN/m2)	106	106	28
q tjd pakai (KN/m2)	194	194	112
Vu/Ø (KN)	90	90	52
Vc (KN)	332	332	332
Kontrol Geser	Ok !	Ok !	Ok !
Geser dua arah			
x (m)	0.7	0.7	0.7
y (m)	0.7	0.7	0.7
q tjd max (KN/m2)	223.3	223.3	147.6
q tjd min (KN/m2)	91.0	91.0	6.3
q tjd pakai (KN/m2)	157.1	157.1	76.9
Vu/Ø (KN)	385.0	385.0	188.5
βc ≥ 1	1.0	1.0	1.0
bo (m)	2.8	2.8	2.8
Vc1 (KN)	23906.8	23906.8	23906.8
Vc2 (KN)	15937.9	15937.9	15937.9
Vc pakai (KN)	15937.9	15937.9	15937.9
Kontrol Geser	**Ok !**	**Ok !**	**Ok !**
Kuat tumpuan pondasi			
A1 (m2)	0.16	0.16	0.16
A2 (m2)	1.96	1.96	1.96
√(A2/A1)	2	2	2
Ø Pn pondasi (KN)	4284	4284	4284
Ø Pn kolom (KN)	2142	2142	2142
Kontrol tumpuan	**Ok !**	**Ok !**	**Ok !**

Tabel Tulangan Pondasi

Perencanaan tul lentur	PS 1	PS 2	PS 3
q terjadi (KN/m2)	308	308	151
L (m)	0.5	0.5	0.5
Mu (KN-M)	38.5	38.5	18.9
Mu/Ø (KN-M)	48.1	48.1	23.6
1,33.Mu/Ø (KN-M)	64.0	64.0	31.3
f'c (Mpa)	22.5	22.5	22.5
fy (Mpa)	360	360	360
b (mm)	***1000***	***1000***	***1000***
h (mm)	***400***	***400***	***400***
d (mm)	322	322	322
β1	0.85	0.85	0.85
ρb	0.0282	0.0282	0.0282
ρ max	0.0212	0.0212	0.0212
ρ min	0.0039	0.0039	0.0039
Rn	0.464	0.464	0.227
m	18.824	18.824	18.824
ρ	0.0013	0.0013	0.0006
1,33 ρ	0.0017	0.0017	0.0008
ρ pakai	0.0017	0.0017	0.0008
As perlu (mm2)	559.027	559.027	271.968
0,002 bh (mm2)	800.00	800.00	800.00
Asp (mm2)	800.000	800.000	800.000
Ø tul pokok (mm)	***16***	***16***	***16***
A1Ø pokok (mm2)	201.062	201.062	201.062
Jarak tul (s) (mm)	251.327	251.327	251.327
s pakai (mm)	***250***	***250***	***250***
Asada (mm2)	804.248	804.248	804.248
a (mm)	15.139	15.139	15.139
Mn (KN-M)	91.037	91.037	91.037
Kontrol	OK... !	OK... !	OK... !
Tul. Pokok	***D16 - 250***	***D16 - 250***	***D16 - 250***
As bagi (mm2)	800	800	800
Ø tul bagi (mm)	***16***	***16***	***16***
A1Ø bagi (mm2)	201.062	201.062	201.062
s (mm)	251.327	251.327	251.327
s pakai (mm)	***250***	***250***	***250***
Tul. Bagi	***P16 - 250***	***P16 - 250***	***P16 - 250***

Tabel Penulangan Tangga

Qu bordes = 11.76KN/m
Qu tangga = 13.8 KN/m2

f'c = 22,5 Mpa
fy = 240 Mpa
pb = 20 mm

h = 200 mm
b = 1000 mm
d = 175 mm

	T. Entrance	T.Utama	T. Sekunder
Tinggi lantai	4 m	4 m	4 m
Tinggi optrede	18	18	18
Jumlah optrede	22	22	22
Panjang antrede	40 cm	30 cm	31 cm
Jumlah antrede	20	20	20
Lebar bordes	1.62 m	2.5 m	1.7 m
Panjang tangga	562 cm	550 cm	470 cm
Mu	19.08	36.75	17
Mu/Φ	23.85	45.9375	21.25
Tulangan			
Rn = (Mu/Φ)/(b.d2)	0.968	1.500	0.694
m = fy/(0,85.f'c)	12.55	18.82	12.55
ρ perlu=(1/m).(1-(1-2m.Rn/fy)^0,5)	0.0041	0.0043	0.0029
ρb =(0,85.f'c.β/fy).(600/(600+fy))	0.0484	0.0282	0.0484
ρ maks = 0,75 ρb	0.0363	0.0212	0.0363
ρ min = 1,4/fy	0.0058	0.0039	0.0058
1,33 ρ perlu	0.0055	0.0058	0.0039
ρ terpakai	0.0055	0.0043	0.0039
As perlu =ρ terpakai.b.d	864.3	760.3	615.1
As perlu ≥ 0,002.b.h	240	240	240
As pakai	864.3	760.3	615.1
Tul D 10mm	78.54	113.10	78.54
Jrk Tul (S)=A1Ø.b/As pakai	90.9	148.8	127.7
Syarat S ≤ 2.h	240	240	240
Syarat S ≤ 250	250	250	250
dipakai S	90	100	100
As ada = A1Ø.b/ S pakai	873	1131	785
Kontrol Kap Momen (Mn)			
a=As ada.fy/(0,85f'c.b)	10.95	21.29	9.86
Mn= As ada.fy.(d-(0,5a))	36.55	66.92	32.06
Mu= 1,33Mu/Φ	31.72	61.10	28.26
Cek aman	Aman	Aman	Aman
Dipakai Tul	**P10-90**	**P12-100**	**P10-100**
Tul Bagi			
As bagi = 0,002.b.h	314	350	350
Tul D 8 mm	50.27	50.27	50.27
S bagi = A1Ø.b/As bagi	160.0815287	143.616	143.616
Dipakai tul	**P8-160**	**P8-140**	**P8-140**

LAMPIRAN 16

GAMBAR - GAMBAR HASIL PERHITUNGAN

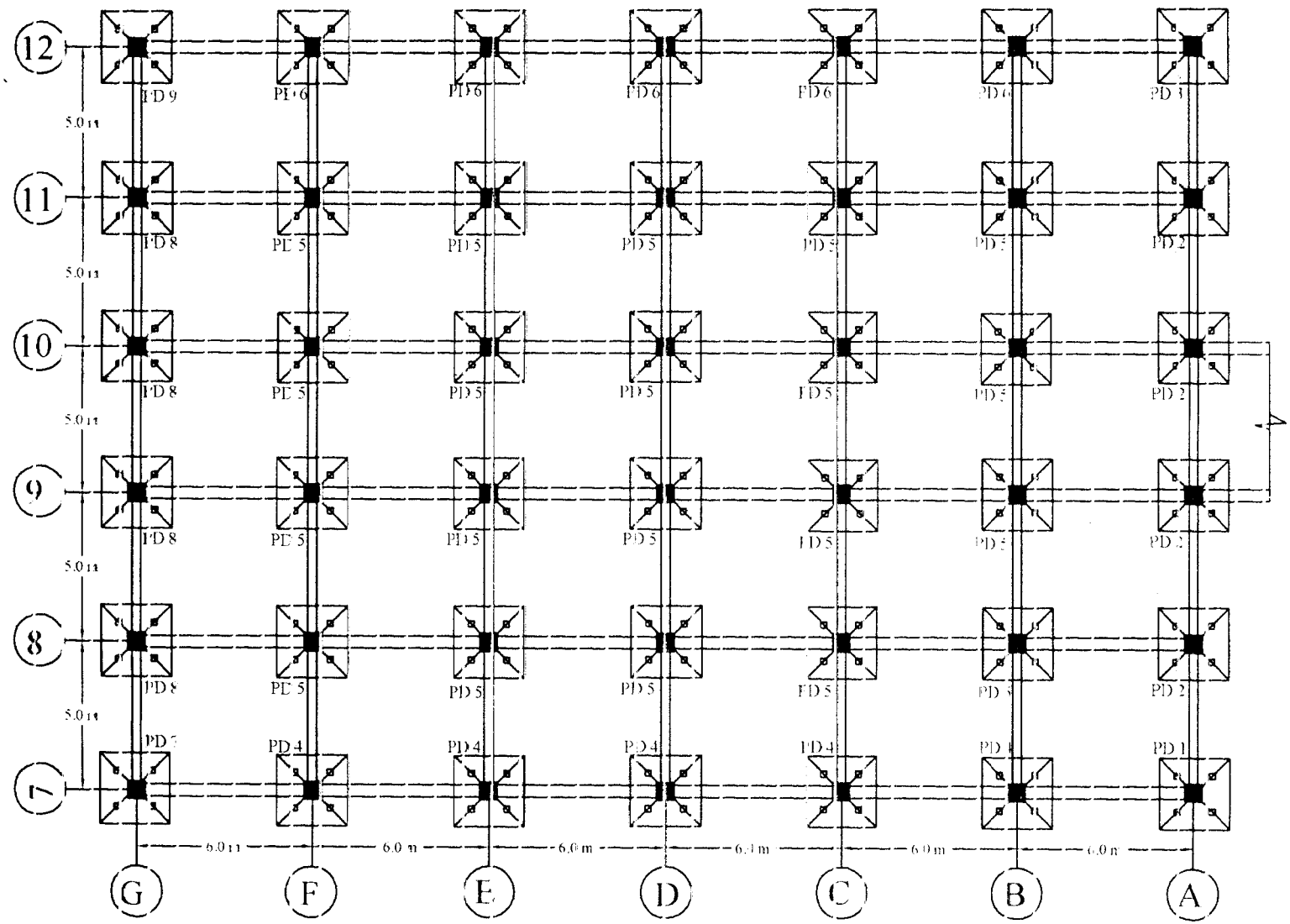

RENCANA PERLETAKAN PONDASI

UNIVERSITAS ISLAM INDONESIA

TUGAS AKHIR
REDISAIN PROYEK
PEMBANGUNAN
PASAR RAKYAT
TELUK KUANTAN
TAHAP - 2

JUDUL GAMBAR :
RENCANA
PERLETAKAN PONDASI

DIGAMBAR OLEH :
FAJAR WIRIADI
98 511 133

DIPERIKSA OLEH :

IR. ILMAN NOOR, MSCE

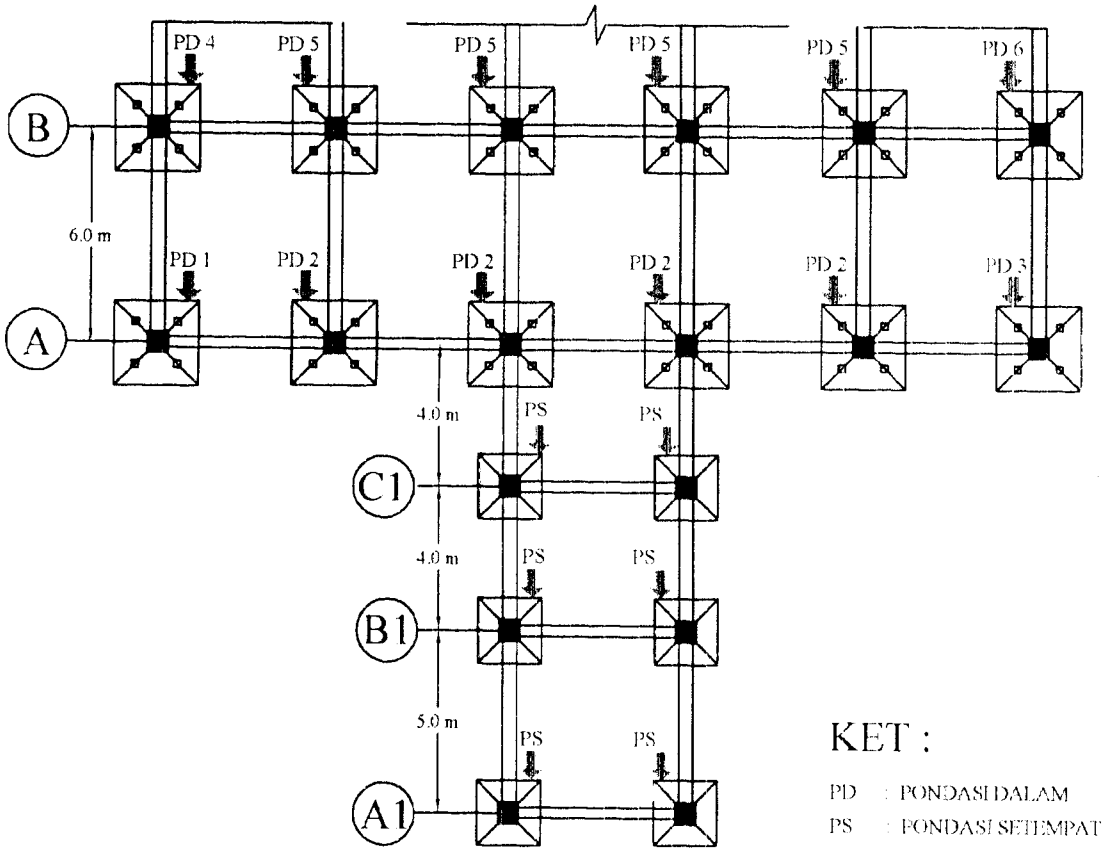

RENCANA PERLETAKAN PONDASI ENTRANCE

UNIVERSITAS ISLAM INDONESIA

TUGAS AKHIR
REDISAIN PROYEK
PEMBANGUNAN
PASAR RAKYAT
TELUK KUANTAN
TAHAP - 2

JUDUL GAMBAR :
RENCANA
PERLETAKAN PONDASI
ENTRANCE

DIGAMBAR OLEH :
FAJAR WIRIADI
98 511 133

DIPERIKSA OLEH :

IR. ILMAN NOOR, MSCE

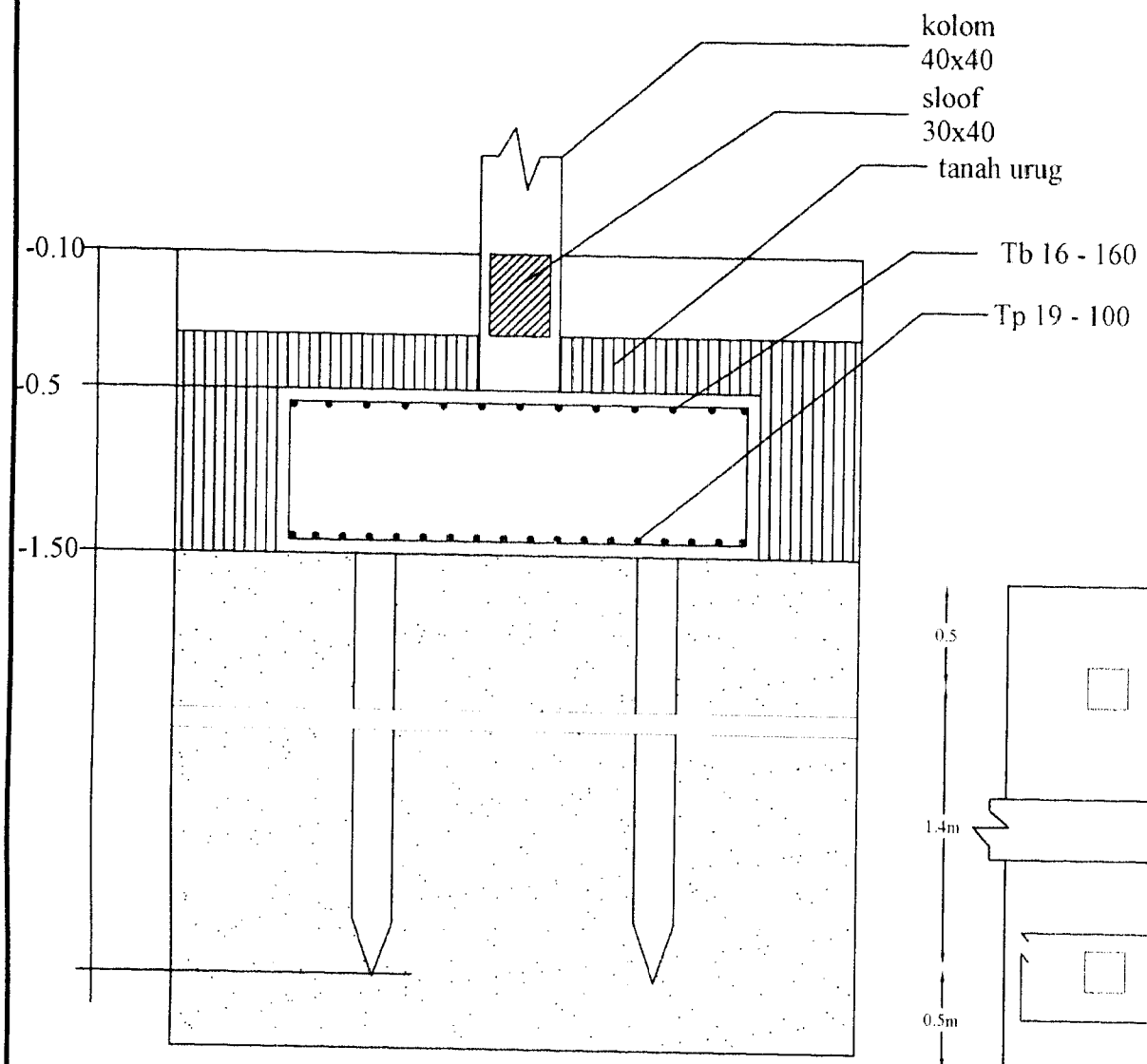

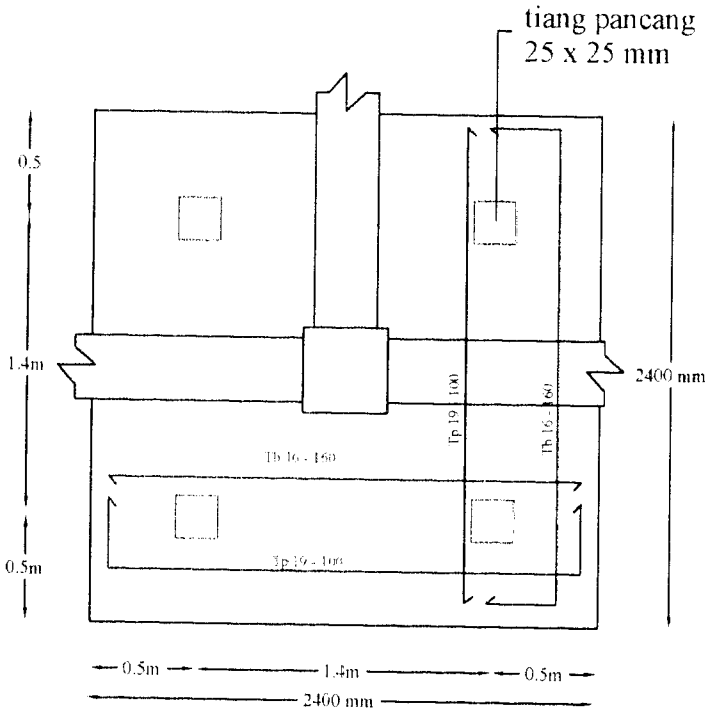

UNIVERSITAS ISLAM INDONESIA

TUGAS AKHIR
REDISAIN PROYEK
PEMBANGUNAN
PASAR RAKYAT
TELUK KUANTAN
TAHAP - 2

JUDUL GAMBAR :
DETAIL PONDASI
PD 2

DIGAMBAR OLEH :
FAJAR WIRIADI
98 511 133

DIPERIKSA OLEH :

IR. ILMAN NOOR, MSCE

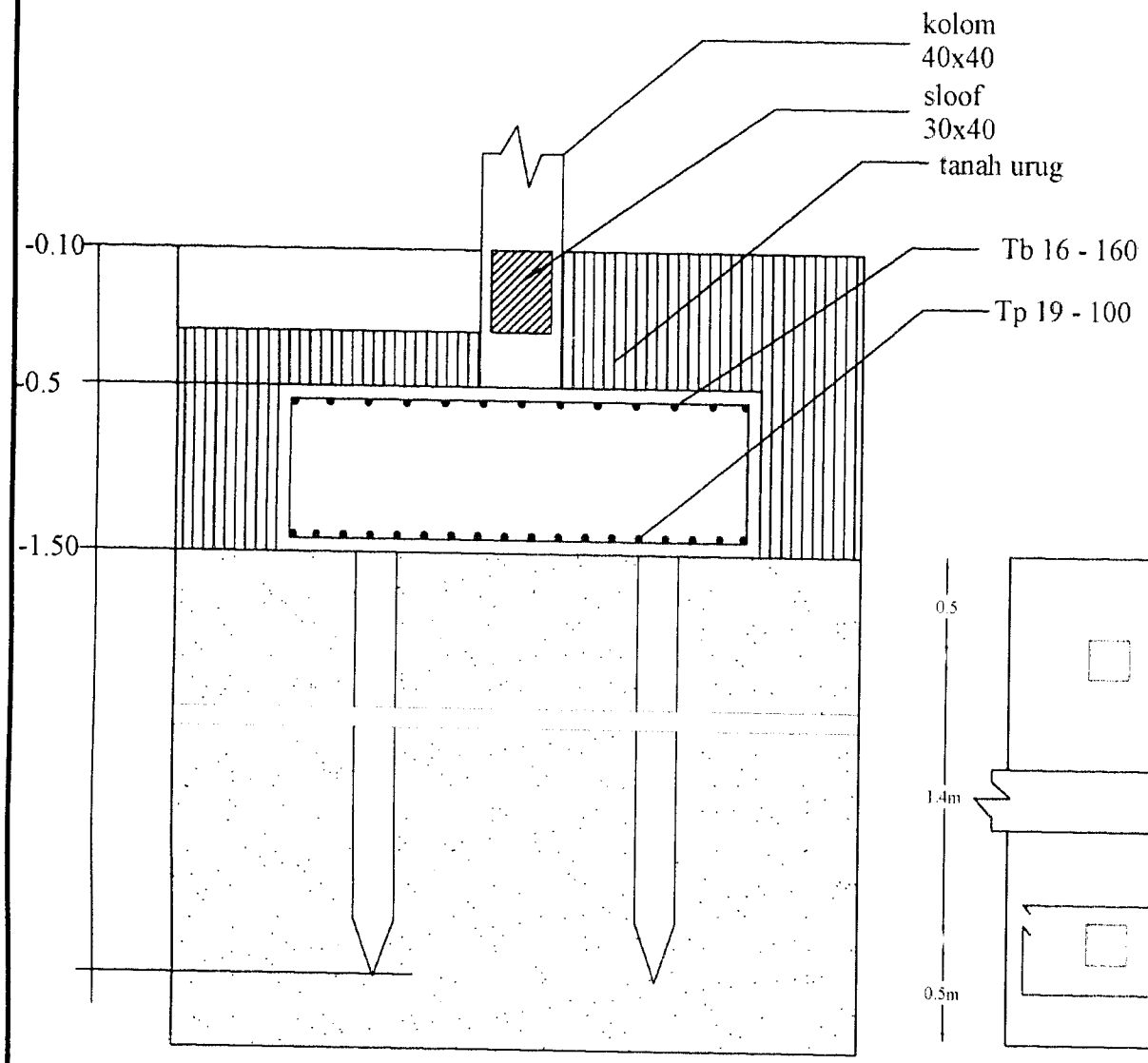

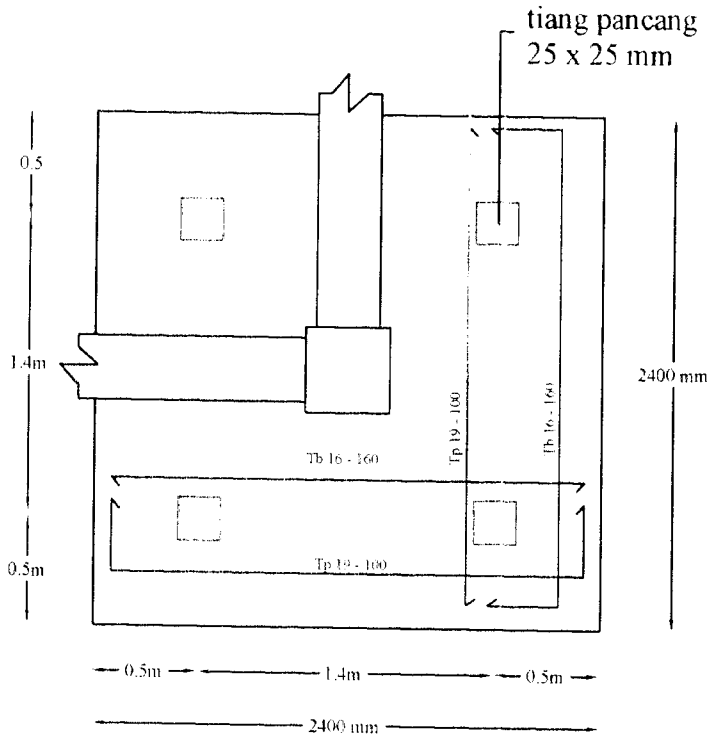

UNIVERSITAS ISLAM INDONESIA

TUGAS AKHIR
REDISAIN PROYEK
PEMBANGUNAN
PASAR RAKYAT
TELUK KUANTAN
TAHAP - 2

JUDUL GAMBAR :
DETAIL PONDASI
PD 3

DIGAMBAR OLEH :
FAJAR WIRIADI
98 511 133

DIPERIKSA OLEH :

IR. ILMAN NOOR, MSCE

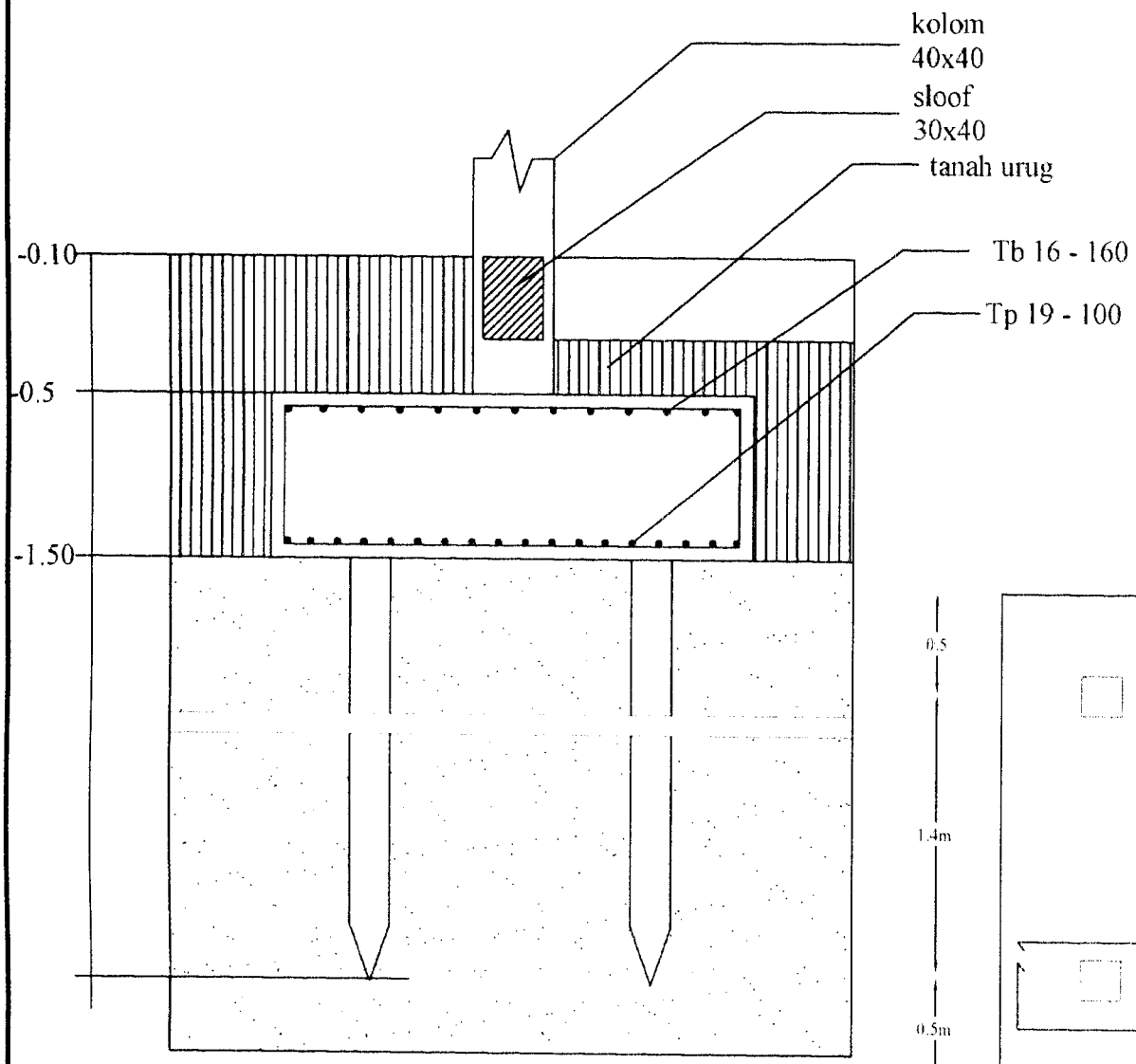

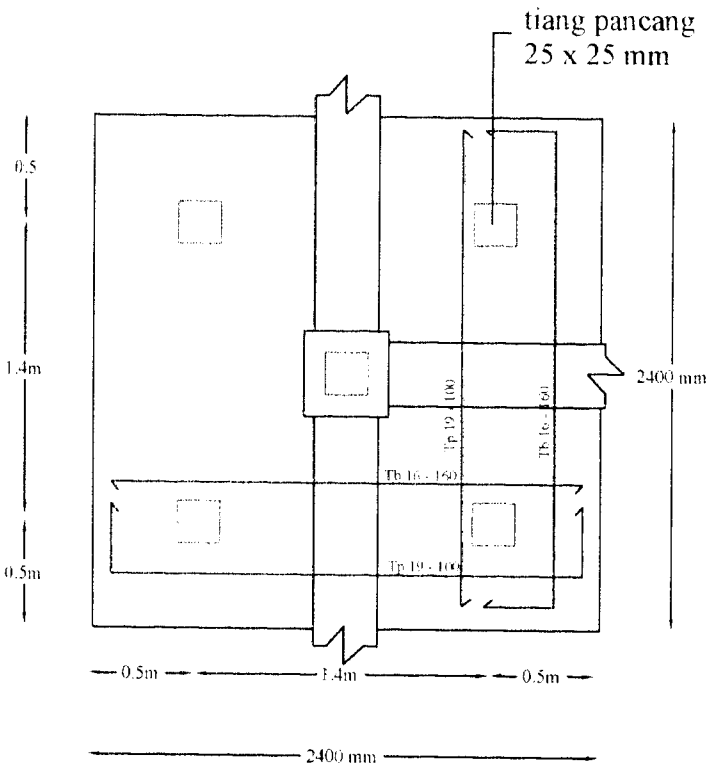

TUGAS AKHIR
REDISAIN PROYEK
PEMBANGUNAN
PASAR RAKYAT
TELUK KUANTAN
TAHAP - 2

JUDUL GAMBAR :
DETAIL PONDASI
PD 4

DIGAMBAR OLEH :
FAJAR WIRIADI
98 511 133

DIPERIKSA OLEH :

IR. ILMAN NOOR, MSCE

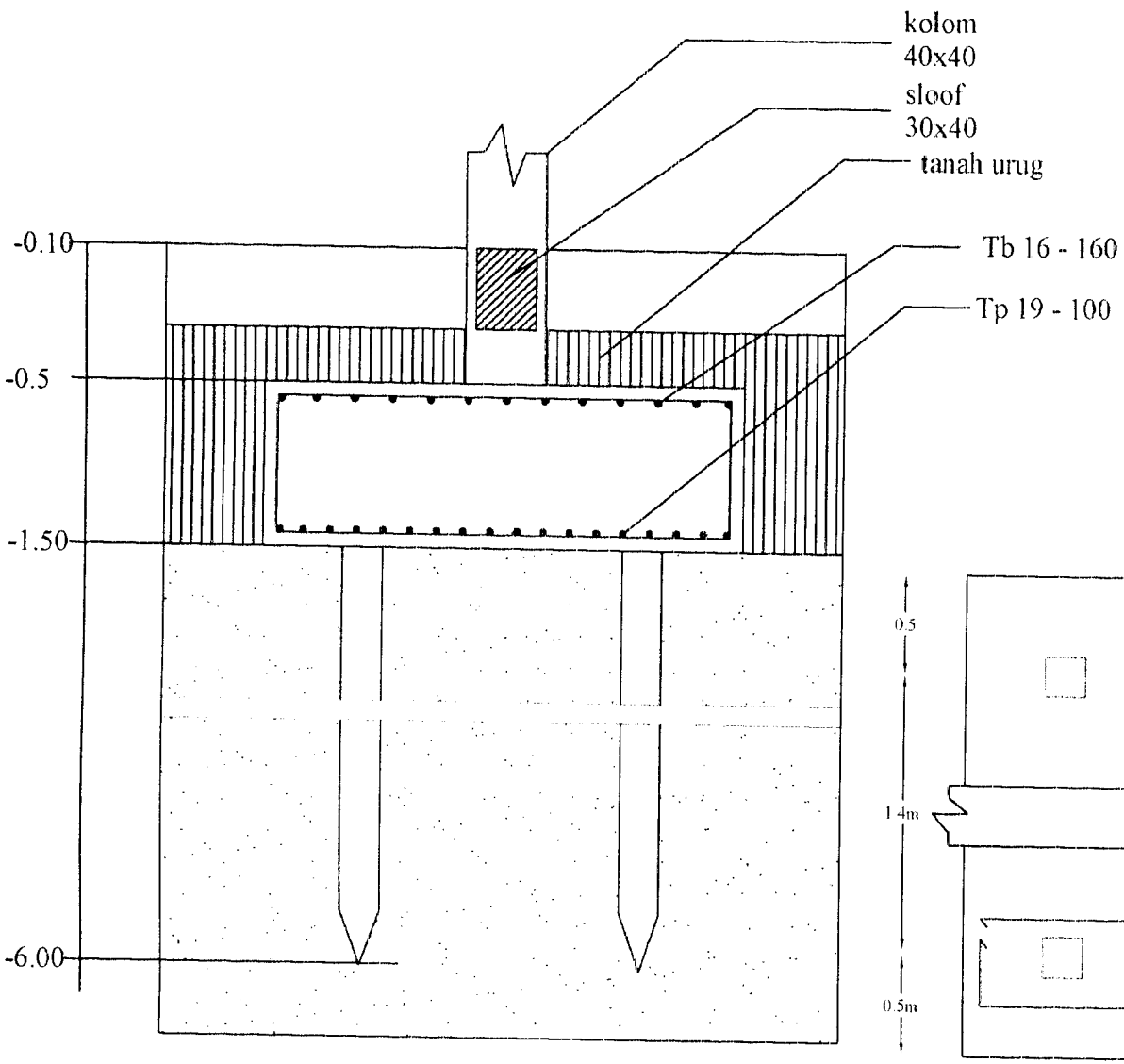

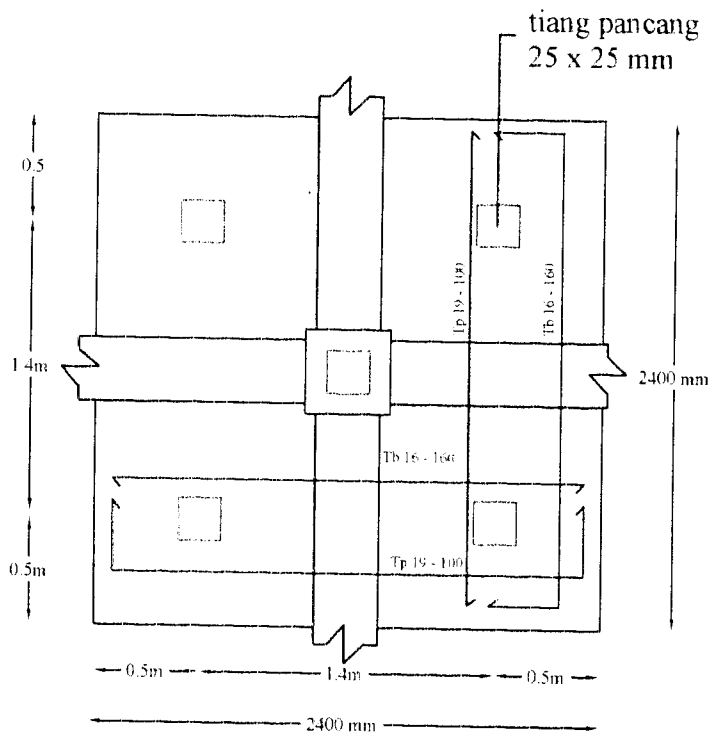

UNIVERSITAS ISLAM INDONESIA

TUGAS AKHIR
REDISAIN PROYEK
PEMBANGUNAN
PASAR RAKYAT
TELUK KUANTAN
TAHAP - 2

JUDUL GAMBAR :
DETAIL PONDASI
PD 5

DIGAMBAR OLEH :
FAJAR WIRIADI
98 511 133

DIPERIKSA OLEH :

IR. ILMAN NOOR, MSCE

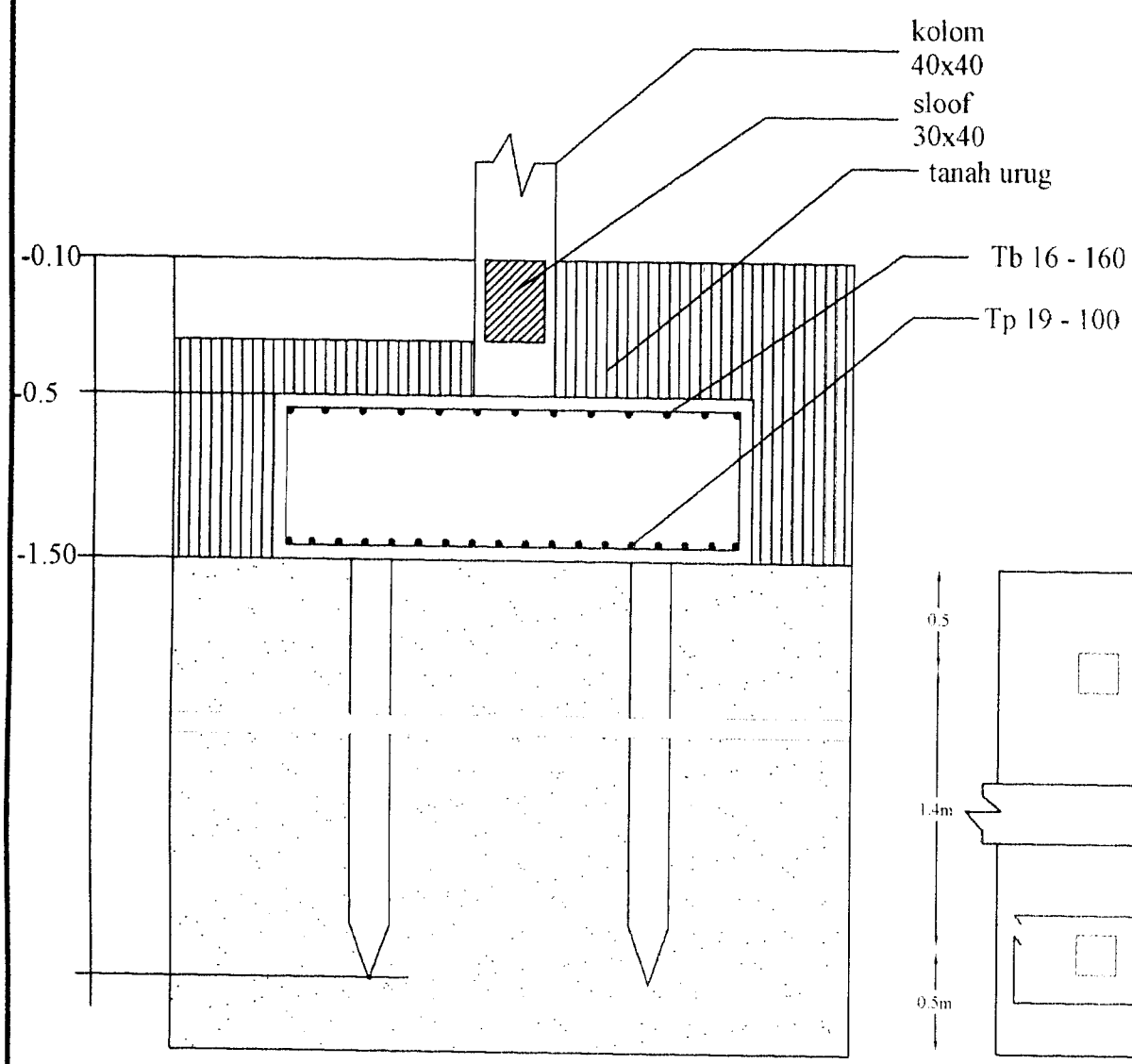

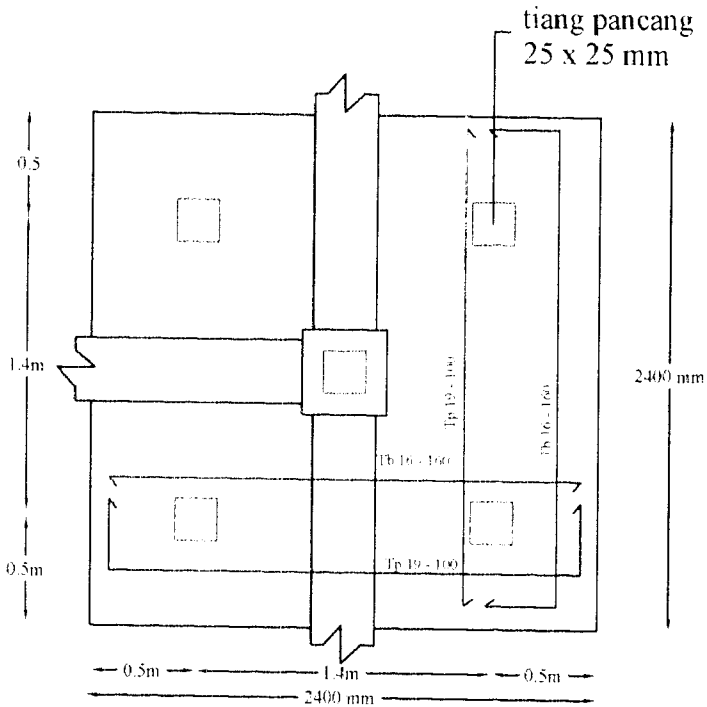

UNIVERSITAS ISLAM INDONESIA

TUGAS AKHIR
REDISAIN PROYEK
PEMBANGUNAN
PASAR RAKYAT
TELUK KUANTAN
TAHAP - 2

JUDUL GAMBAR :
DETAIL PONDASI
PD 6

DIGAMBAR OLEH :
FAJAR WIRIADI
98 511 133

DIPERIKSA OLEH :

IR. ILMAN NOOR, MSCE

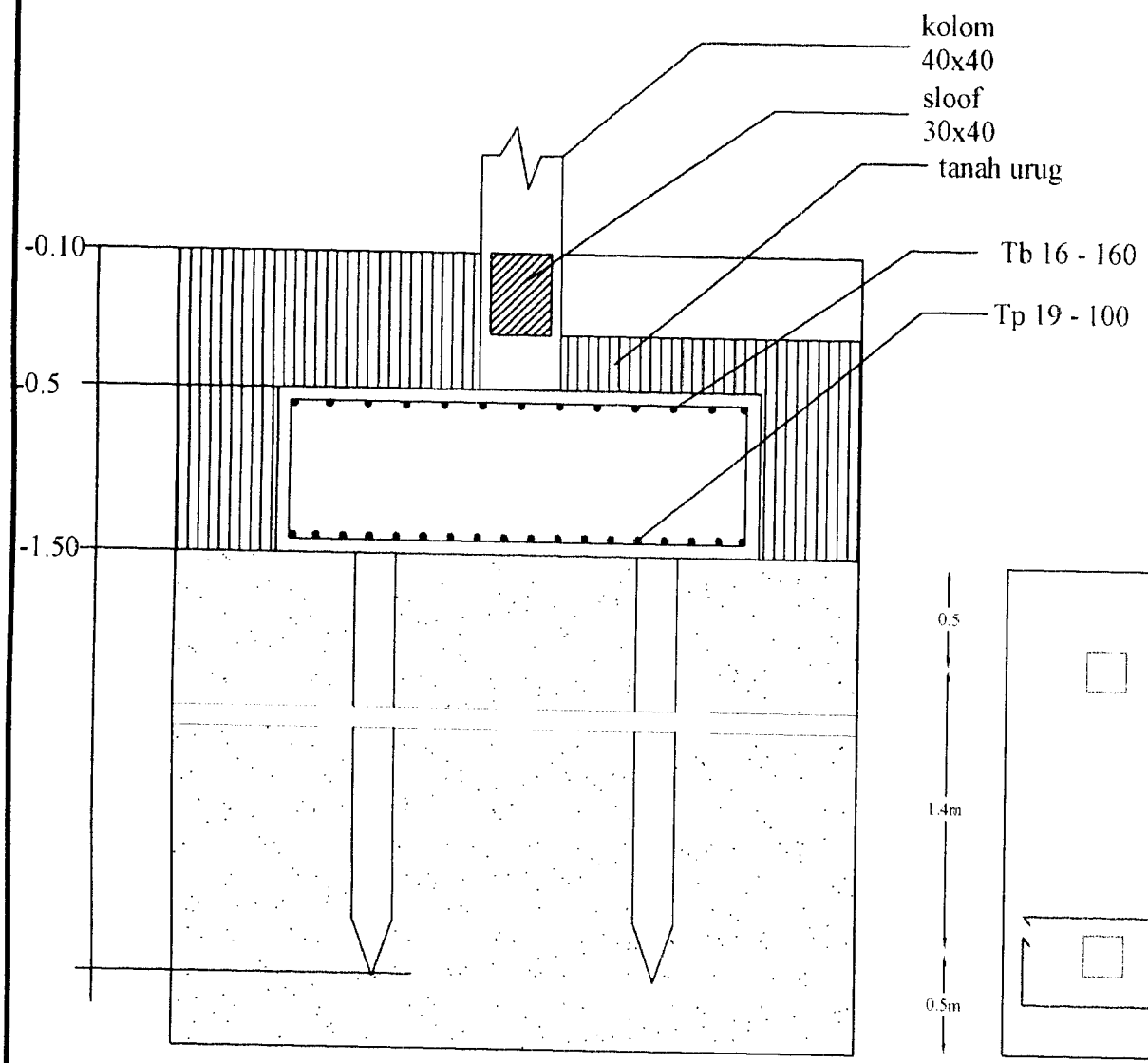

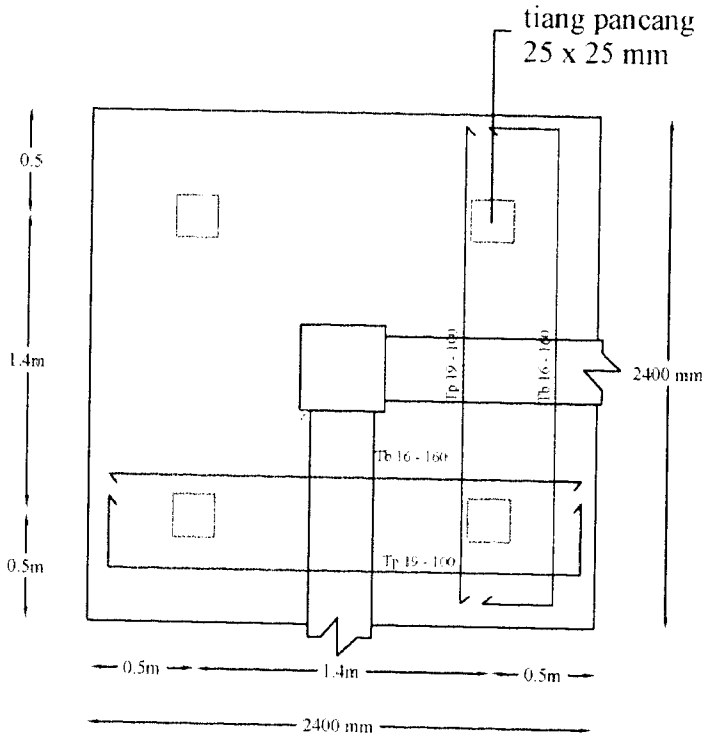

UNIVERSITAS ISLAM INDONESIA

TUGAS AKHIR
REDISAIN PROYEK
PEMBANGUNAN
PASAR RAKYAT
TELUK KUANTAN
TAHAP - 2

JUDUL GAMBAR :
DETAIL PONDASI
PD 7

DIGAMBAR OLEH :
FAJAR WIRIADI
98 511 133

DIPERIKSA OLEH :

IR. ILMAN NOOR, MSCE

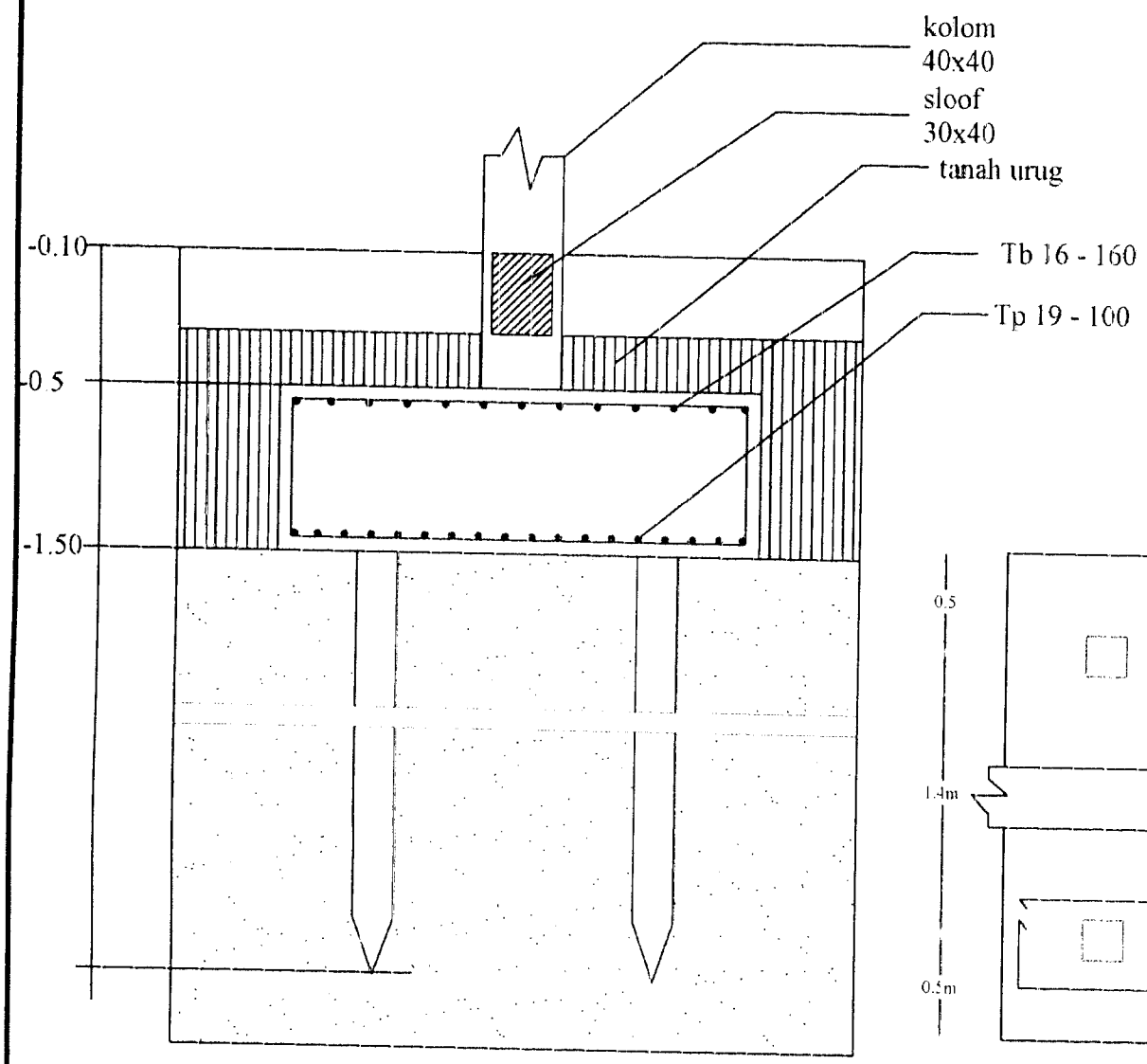

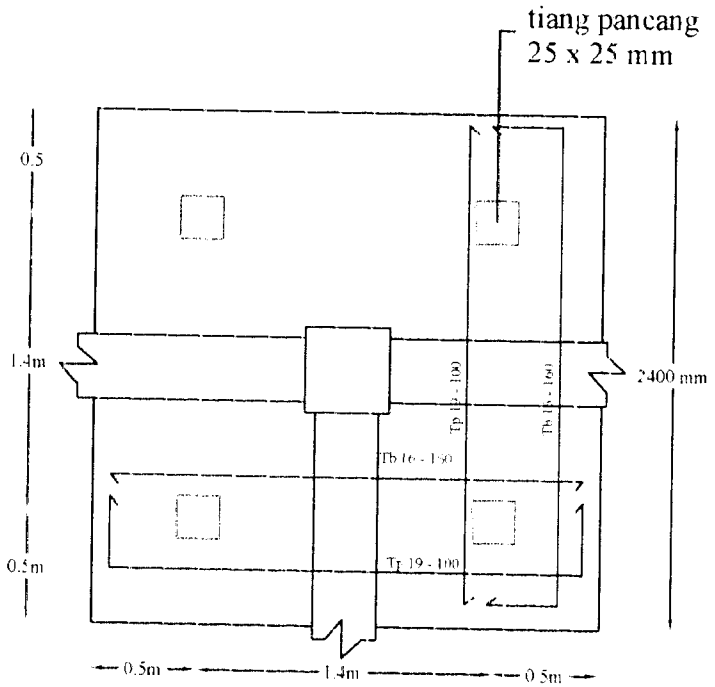

TUGAS AKHIR
REDISAIN PROYEK
PEMBANGUNAN
PASAR RAKYAT
TELUK KUANTAN
TAHAP - 2

JUDUL GAMBAR :
DETAIL PONDASI
PD 8

DIGAMBAR OLEH :
FAJAR WIRIADI
98 511 133

DIPERIKSA OLEH :

IR. ILMAN NOOR, MSCE

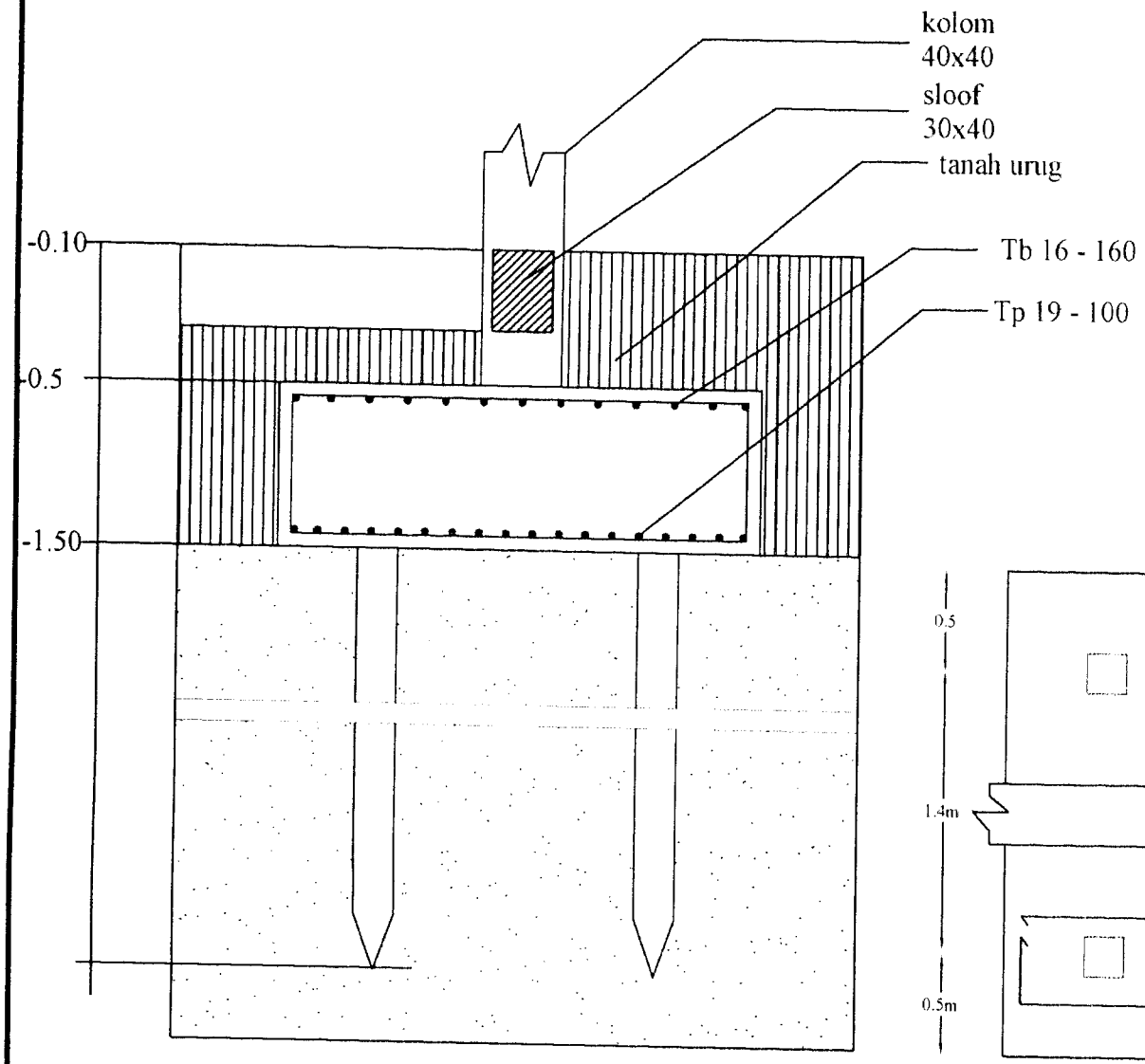

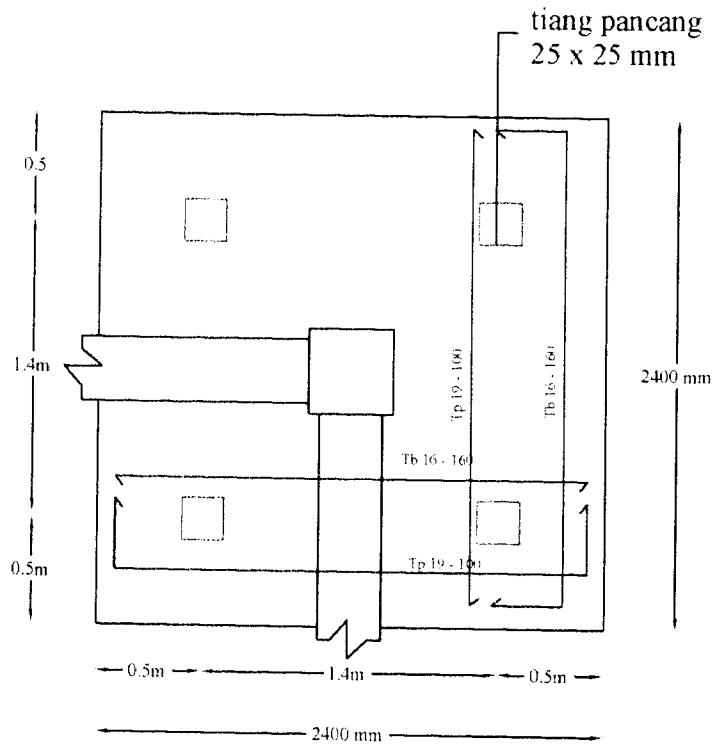

UNIVERSITAS ISLAM INDONESIA

TUGAS AKHIR
REDISAIN PROYEK
PEMBANGUNAN
PASAR RAKYAT
TELUK KUANTAN
TAHAP - 2

JUDUL GAMBAR :
DETAIL PONDASI
PD 9

DIGAMBAR OLEH :
FAJAR WIRIADI
98 511 133

DIPERIKSA OLEH :

IR. ILMAN NOOR, MSCE

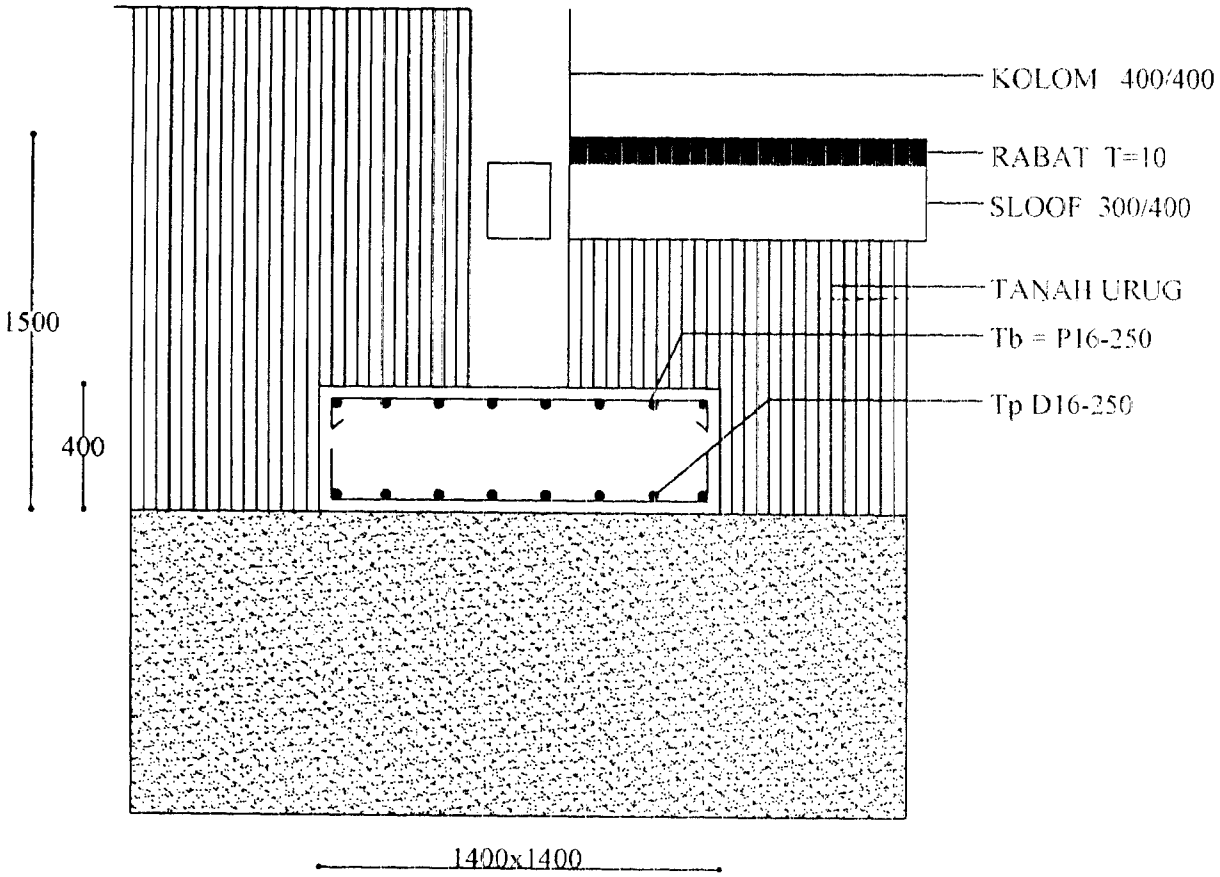

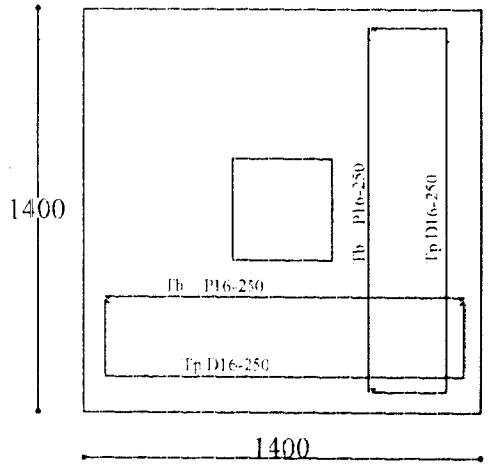

DETAIL PONDASI
PELAT SETEMPAT

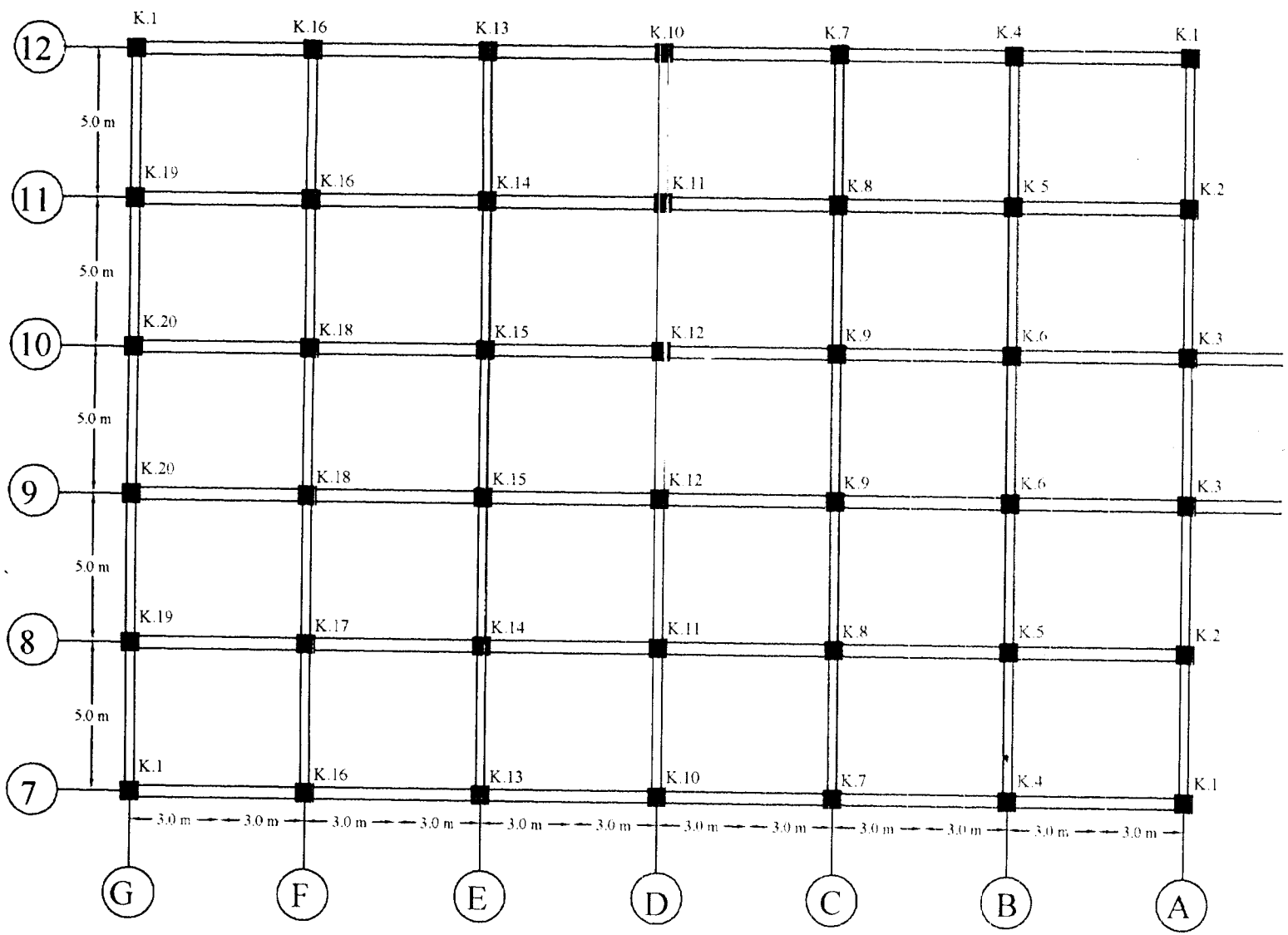

UNIVERSITAS ISLAM INDONESIA

TUGAS AKHIR
REDISAIN PROYEK
PEMBANGUNAN
PASAR RAKYAT
TELUK KUANTAN
TAHAP - 2

JUDUL GAMBAR :
DENAH PERLETAKAN
KOLOM

DIGAMBAR OLEH :
FAJAR WIRIADI
98 511 133

DIPERIKSA OLEH :

IR. ILMAN NOOR, MSCE

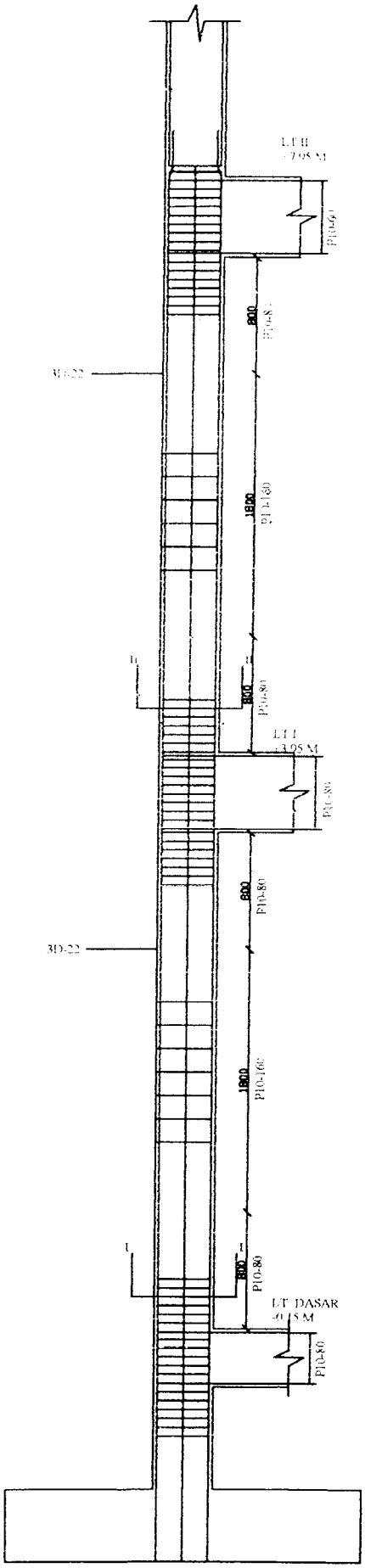

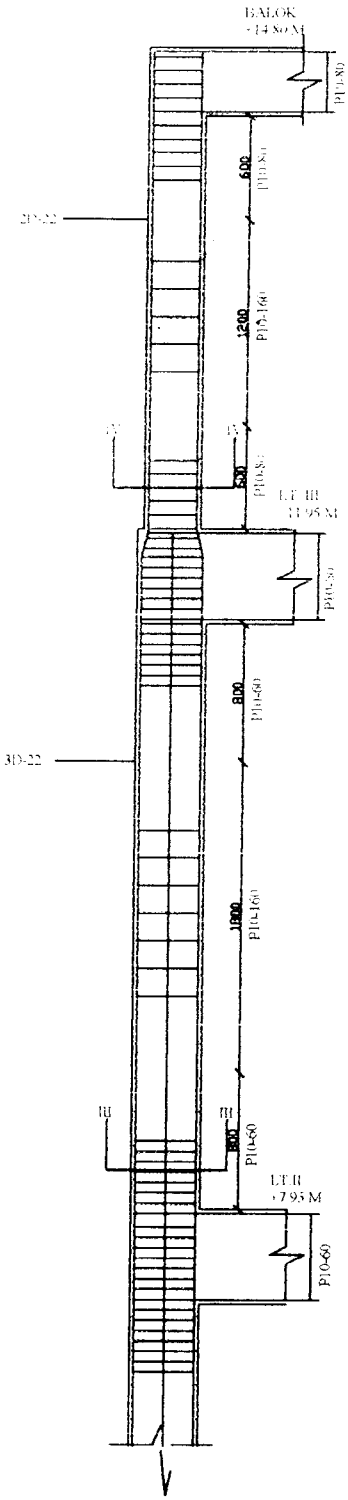

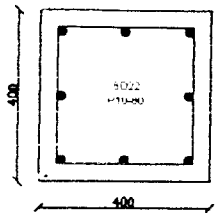

POT.I-I

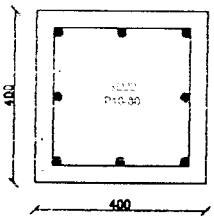

POT.II-II

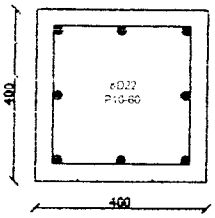

POT.III-III

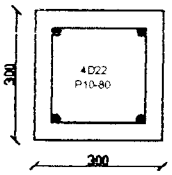

POT.IV-IV

KOLOM K.1

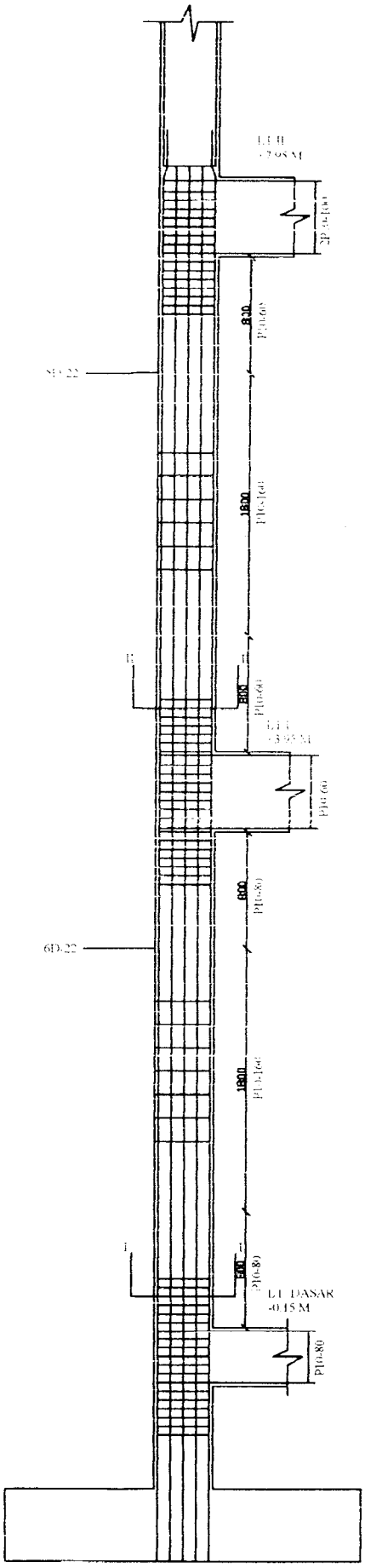

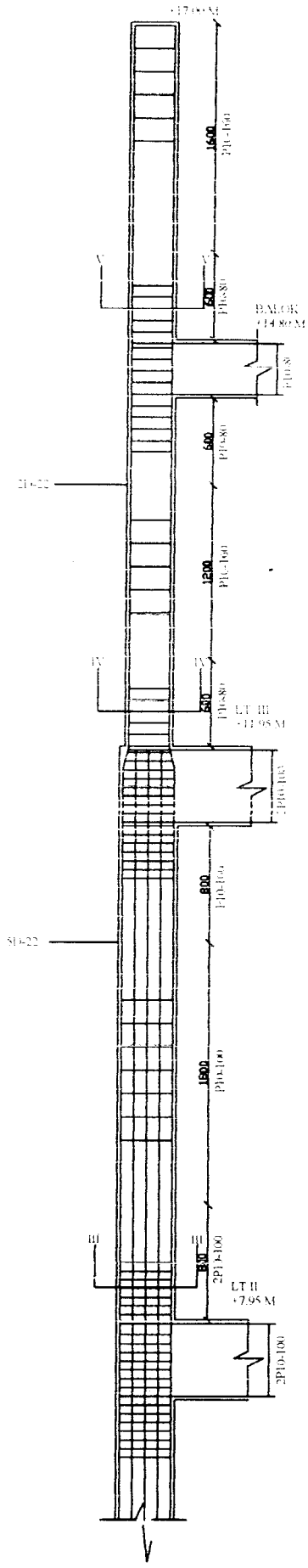

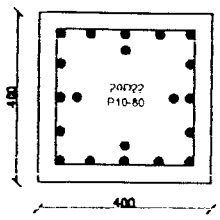

POT.I-I

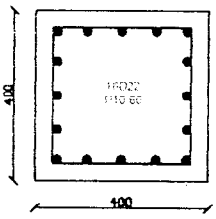

POT.II-II

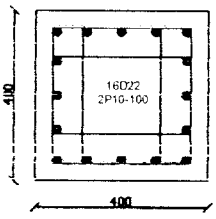

POT.III-III

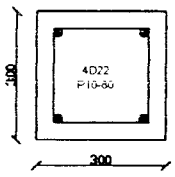

POT.IV-IV

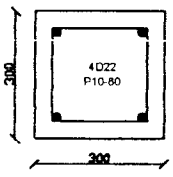

POT.V-V

KOLOM K.2

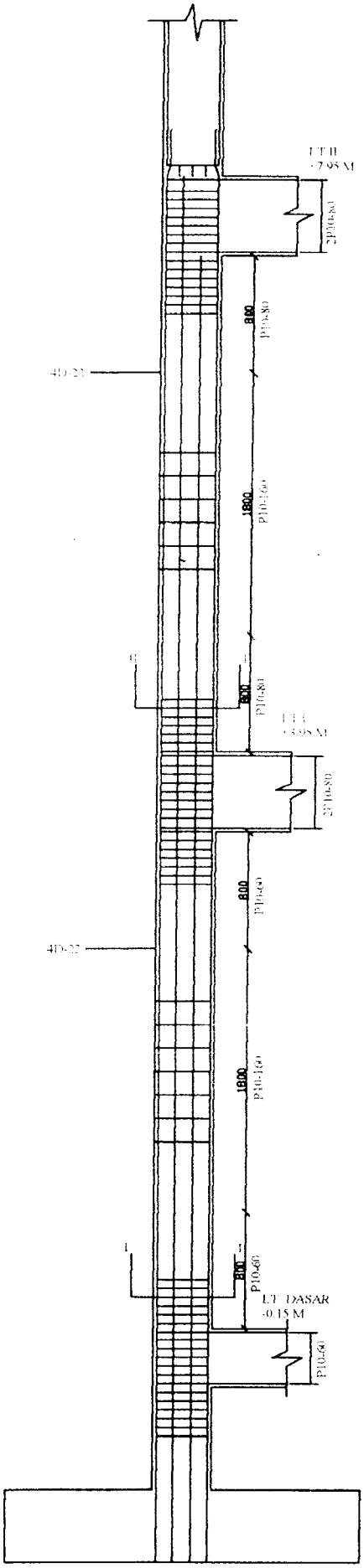

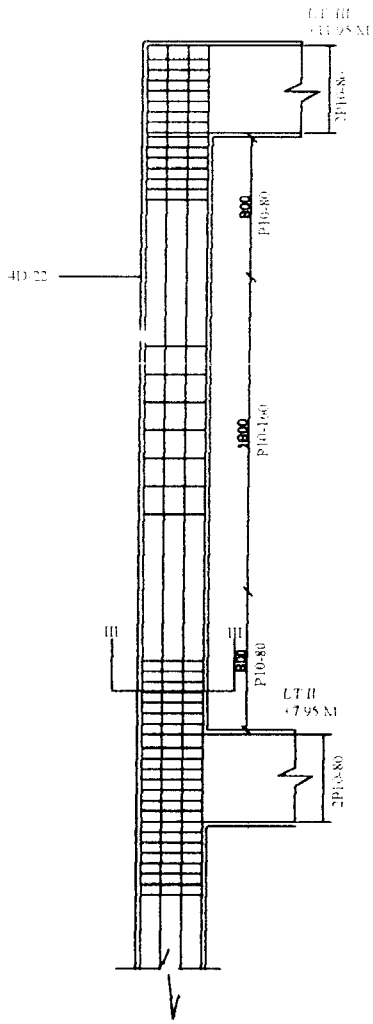

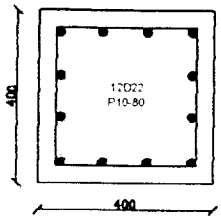

POT.I-I

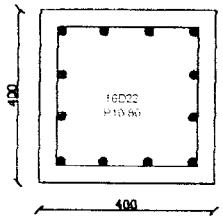

POT.II-II

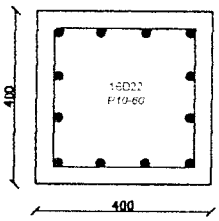

POT.III-III

KOLOM K.3

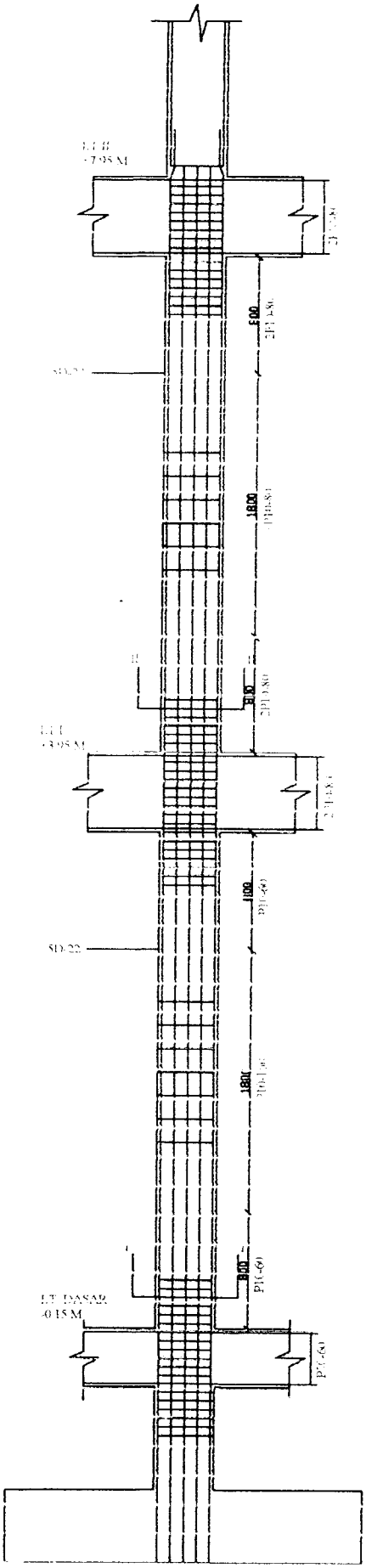

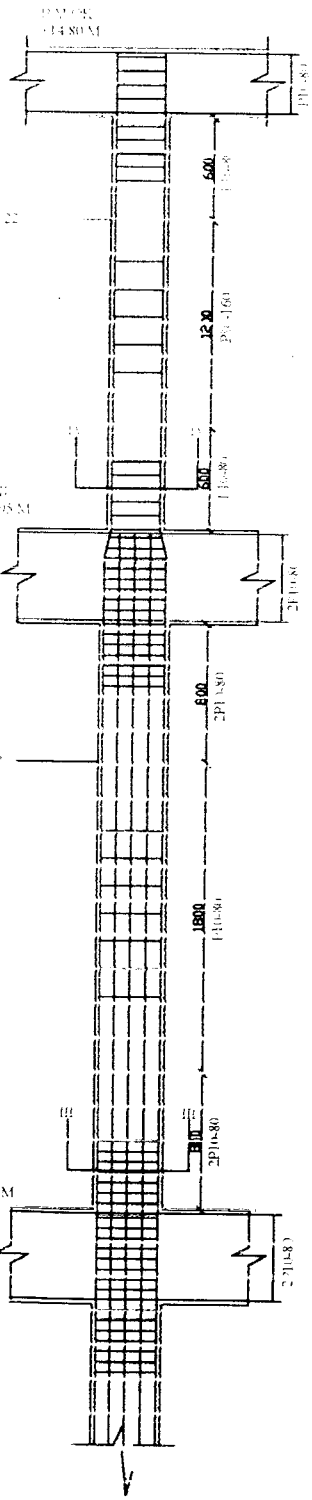

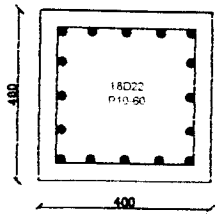

POT.I-I

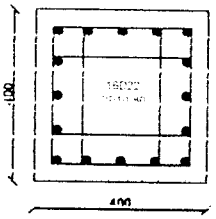

POT.II-II

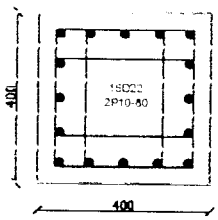

POT.III-III

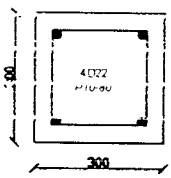

POT.IV-IV

KOLOM K.4

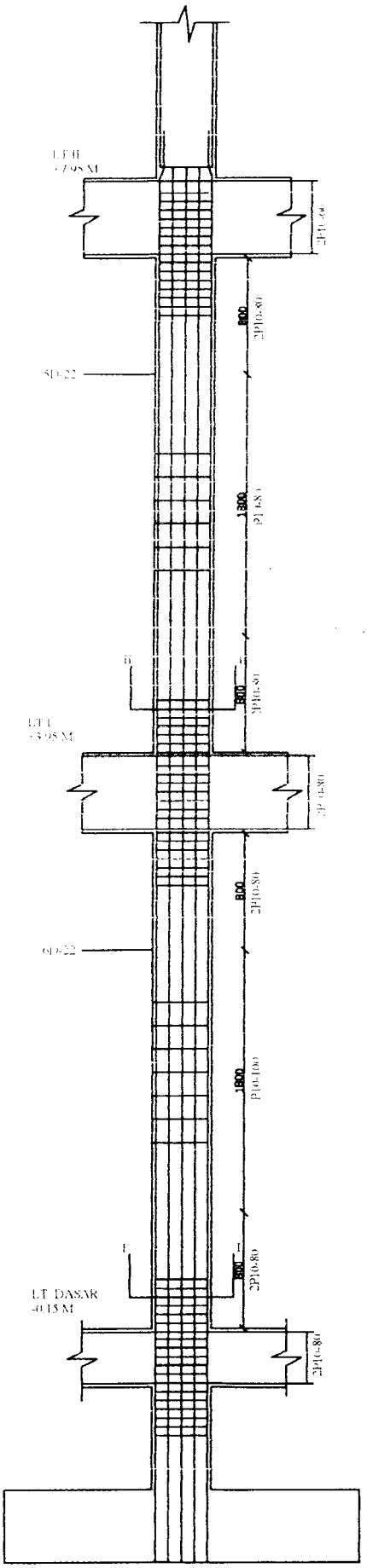

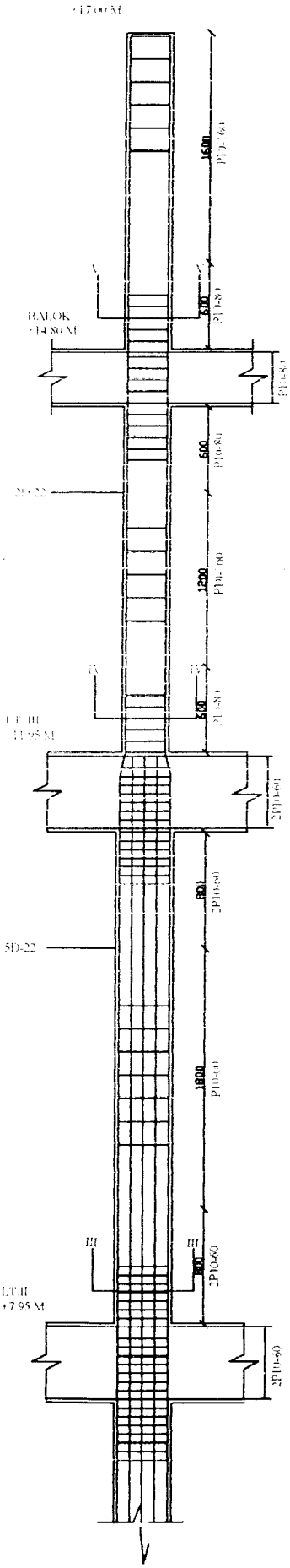

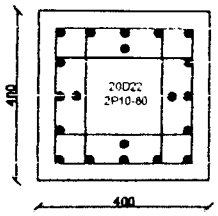

POT.I-I

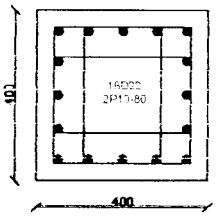

POT.II-II

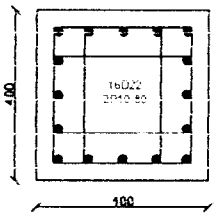

POT.III-III

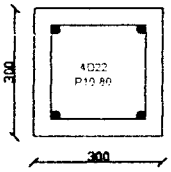

POT.IV-IV

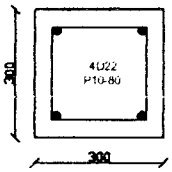

POT.V-V

KOLOM K.5

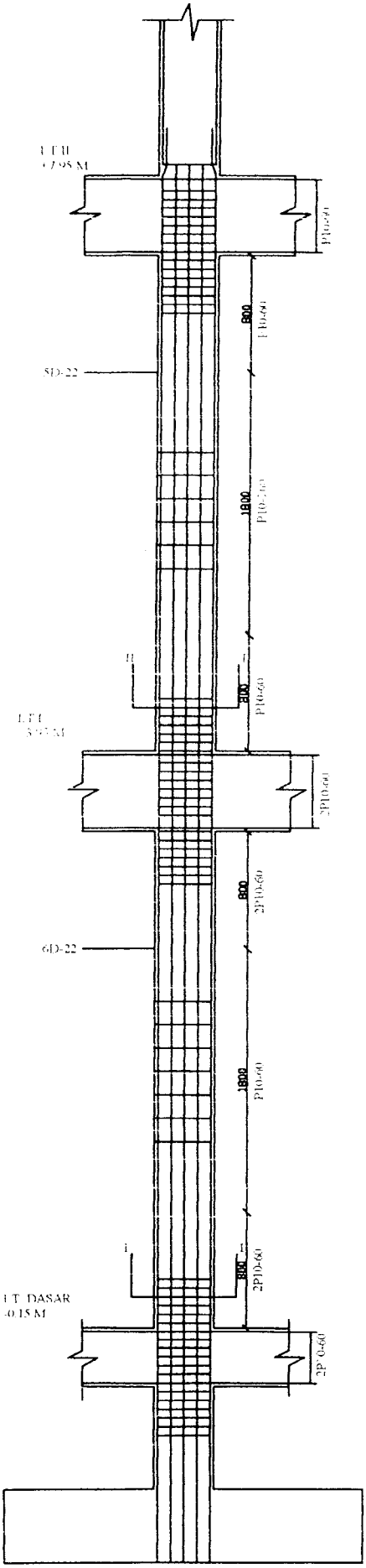

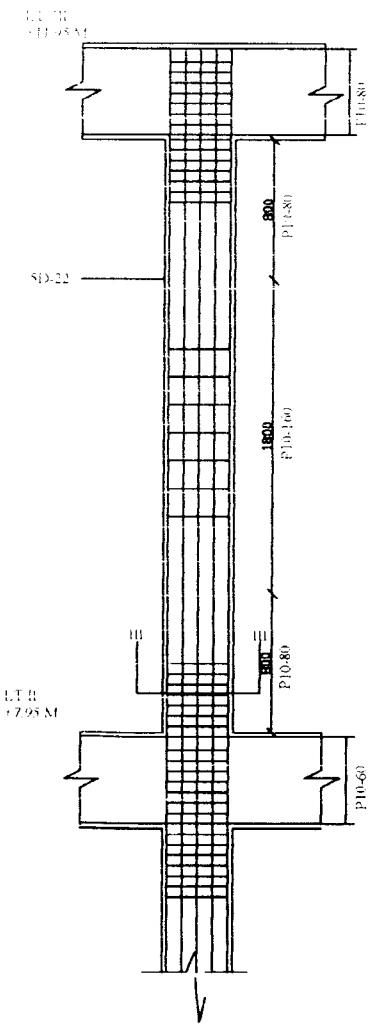

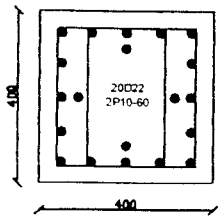

POT.I-I

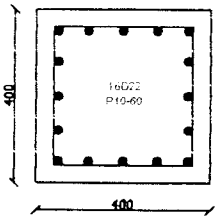

POT.II-II

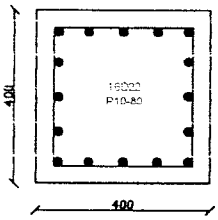

POT.III-III

KOLOM K.6

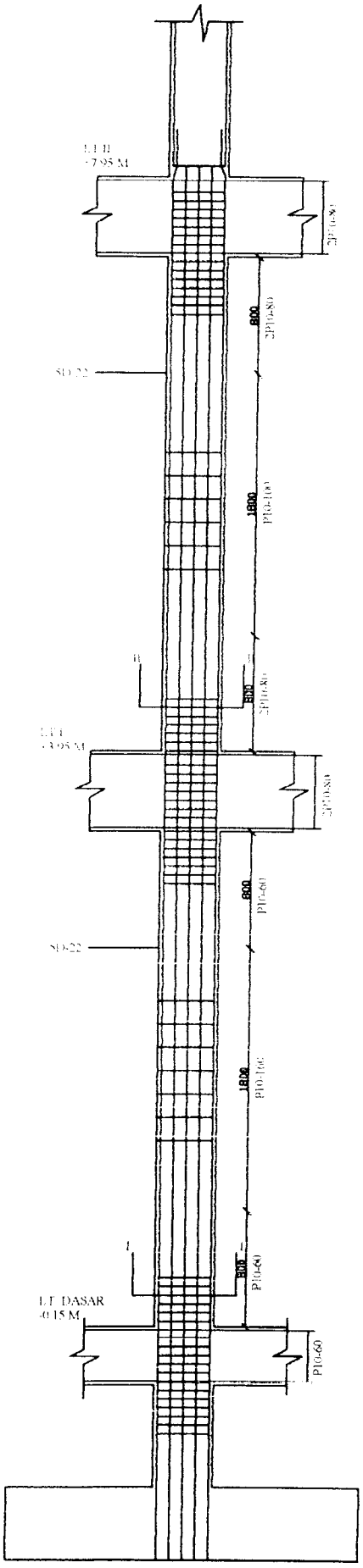

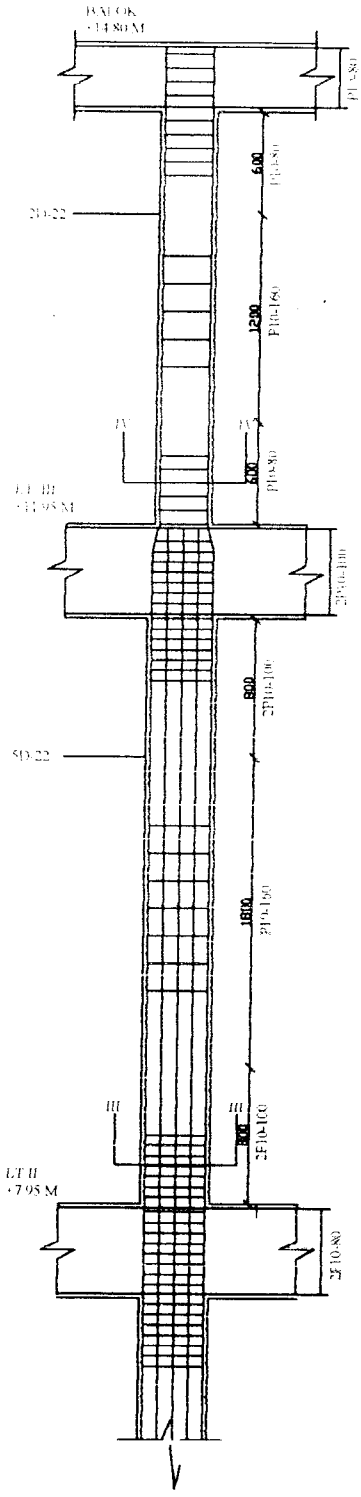

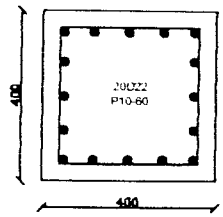

POT.I-I

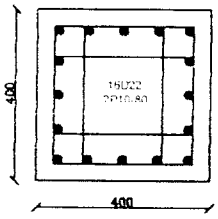

POT.II-II

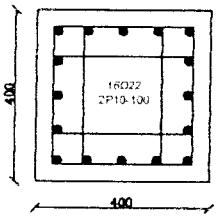

POT.III-III

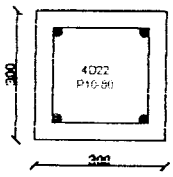

POT.IV-IV

KOLOM K.7

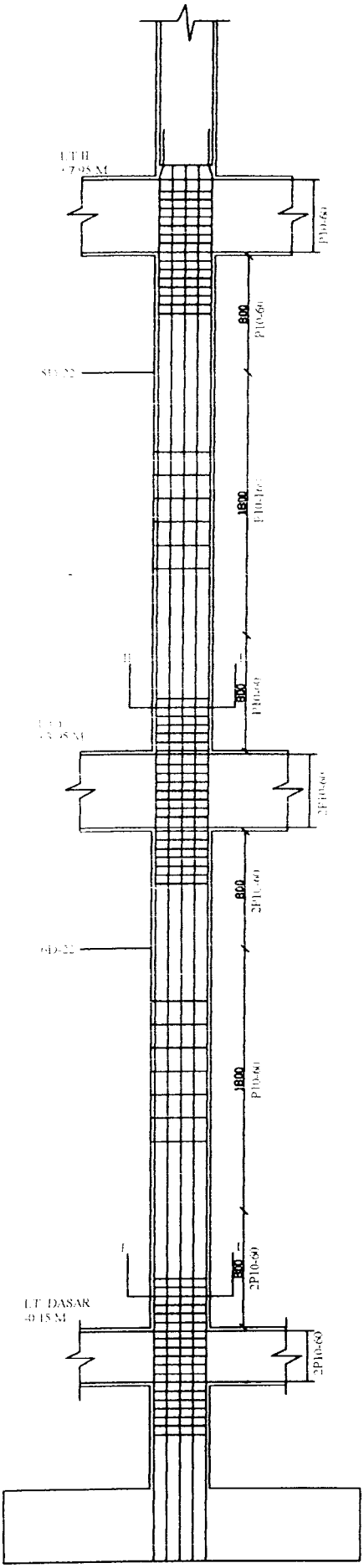

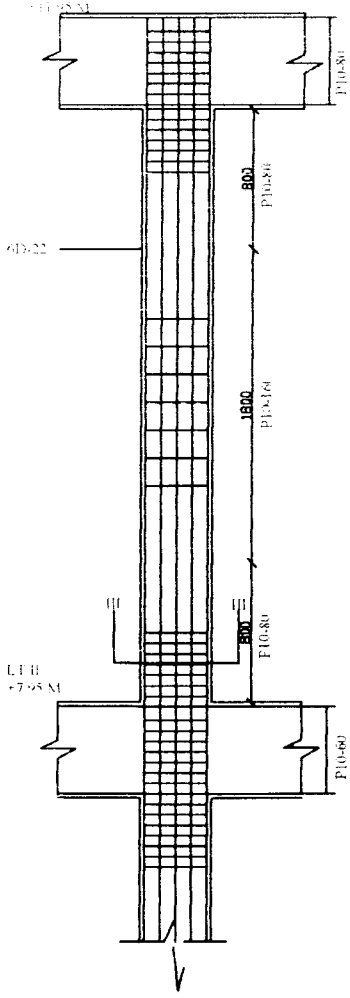

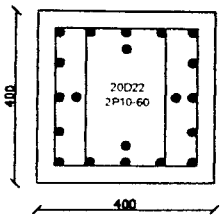

POT.I-I

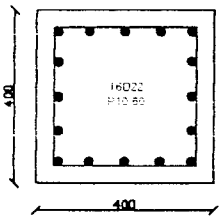

POT.II-II

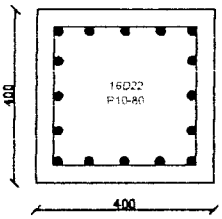

POT.III-III

KOLOM K.9

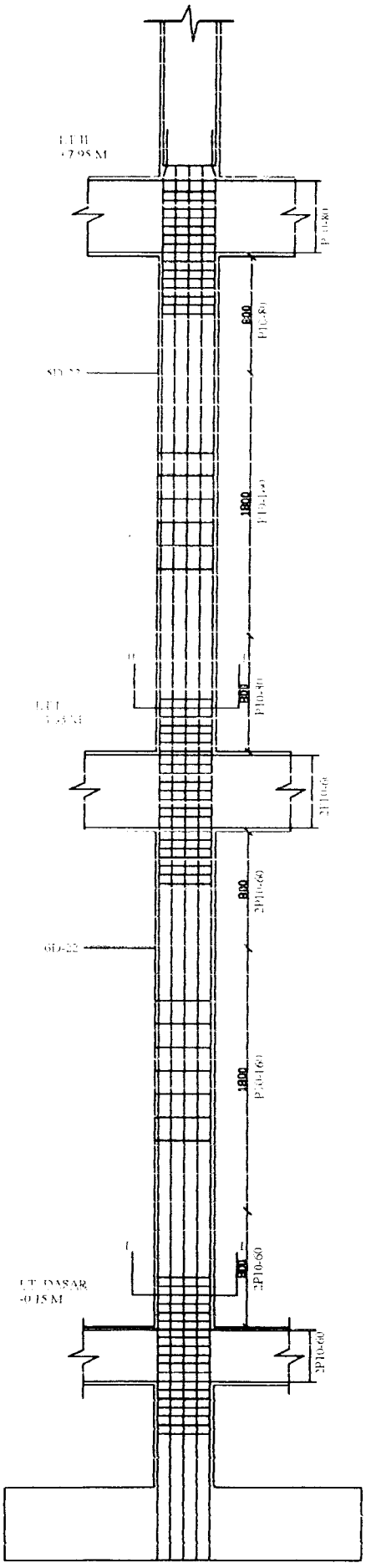

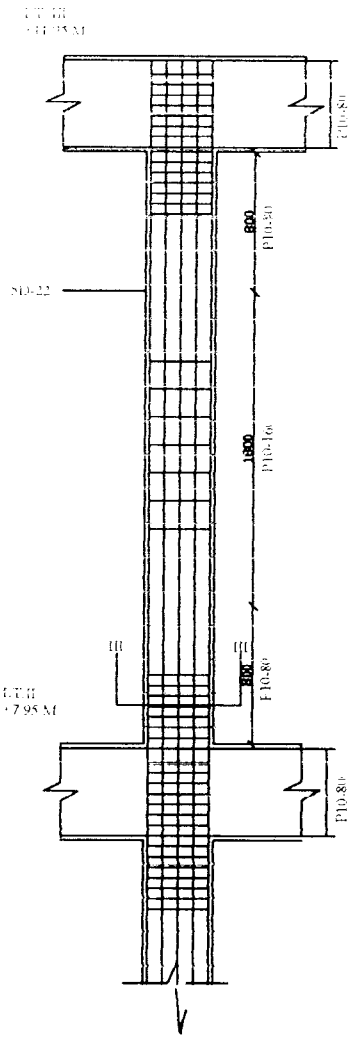

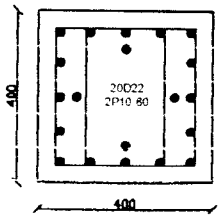

POT.I-I

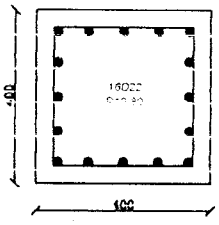

POT.II-II

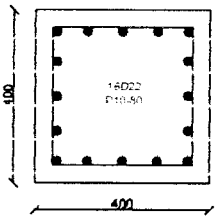

POT.III-III

KOLOM K.12

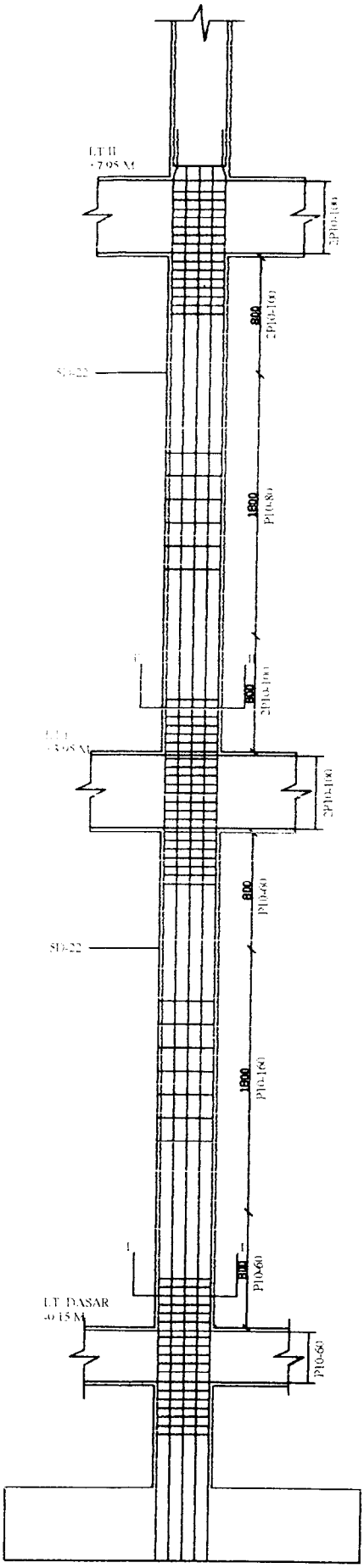

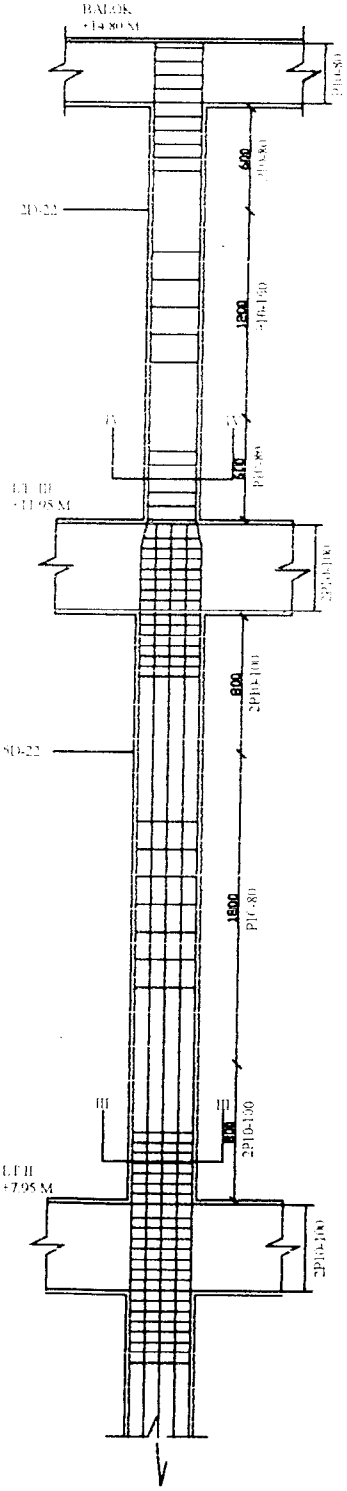

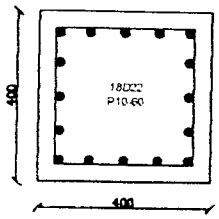

POT.I-I

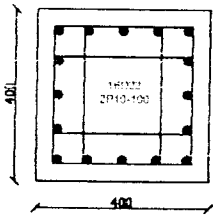

POT.II-II

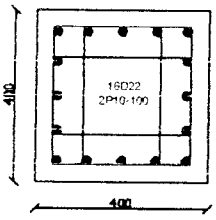

POT.III-III

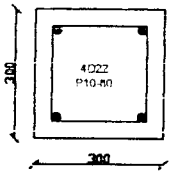

POT.IV-IV

KOLOM K.13

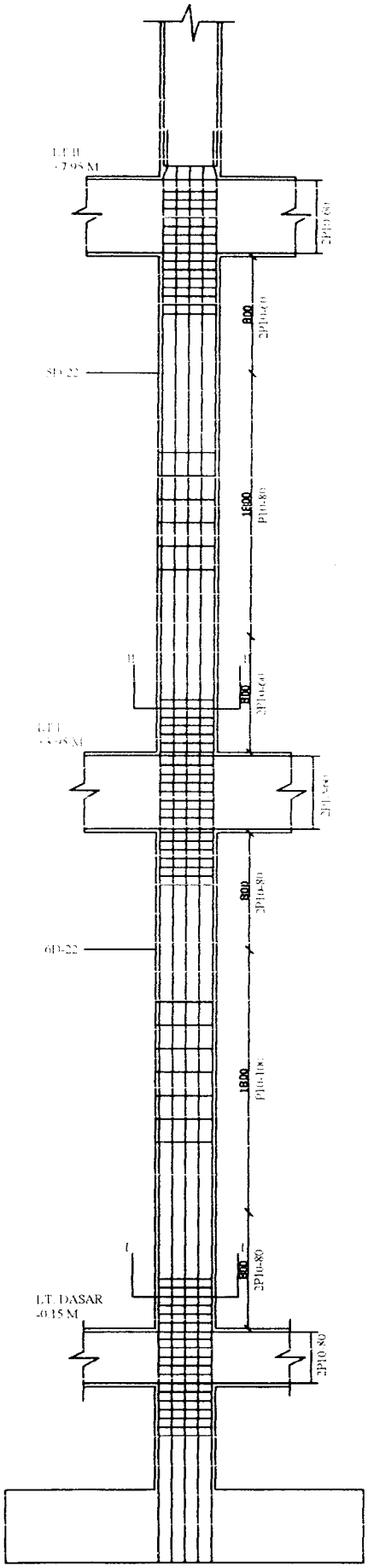

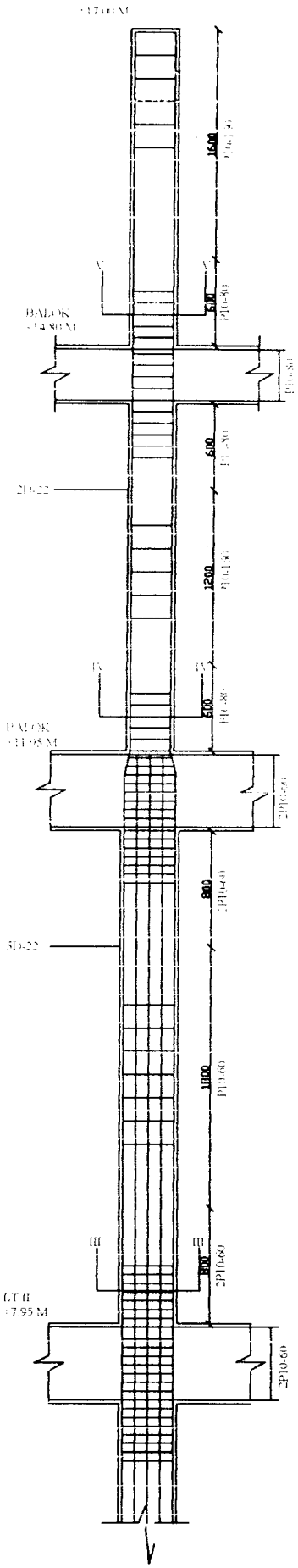

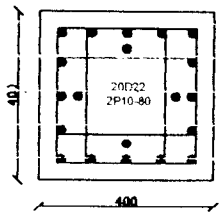

POT.I-I

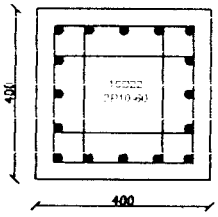

POT.II-II

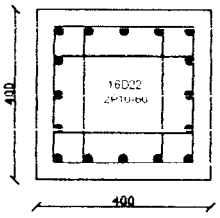

POT.III-III

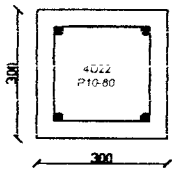

POT.IV-IV

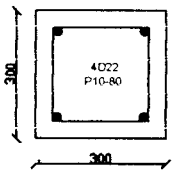

POT.V-V

KOLOM K.14

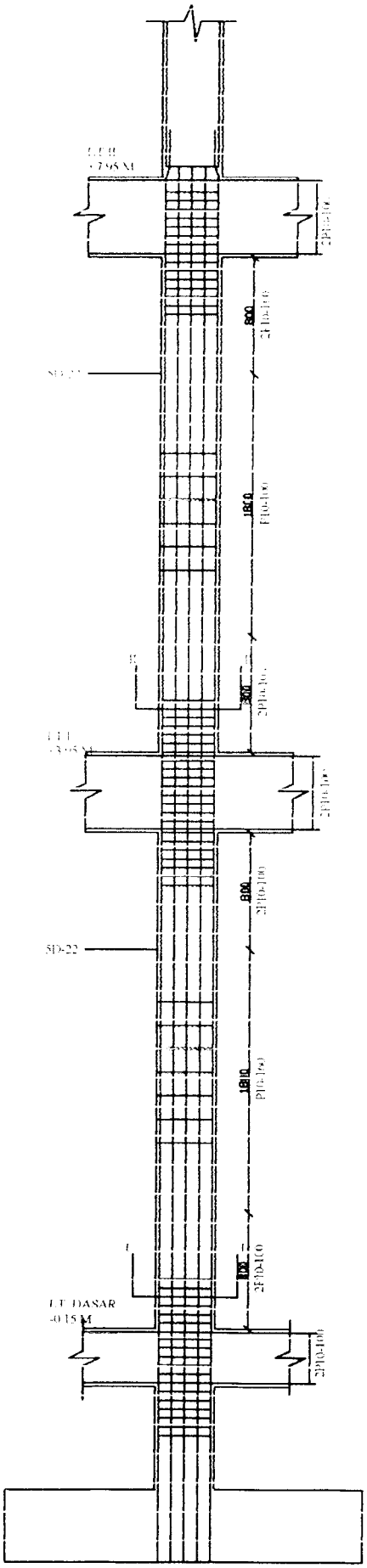

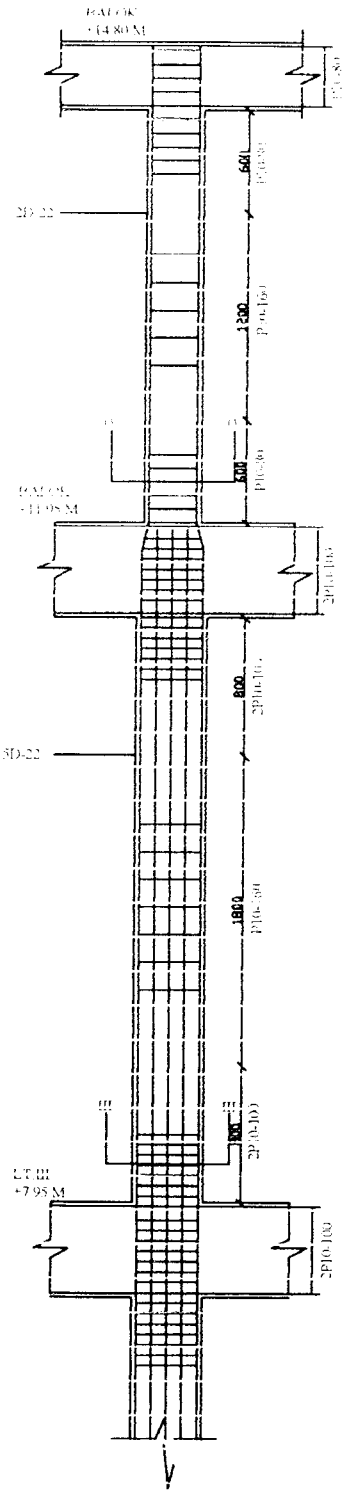

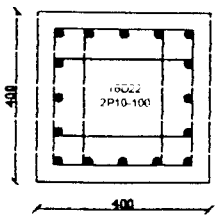

POT.I-I

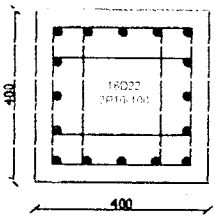

POT.II-II

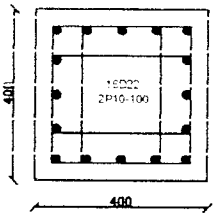

POT.III-III

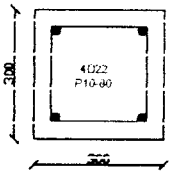

POT.IV-IV

KOLOM K.16

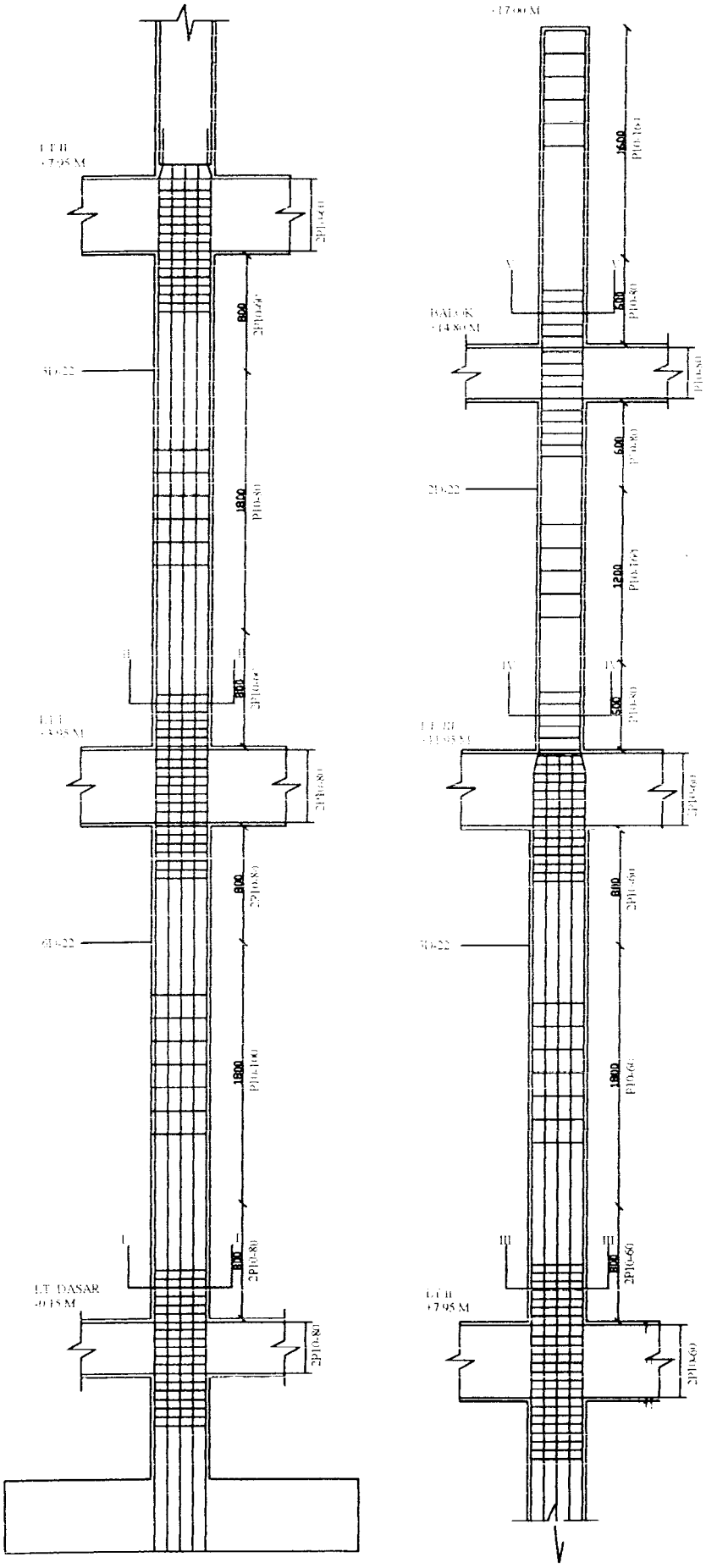

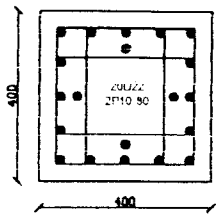

POT.I-I

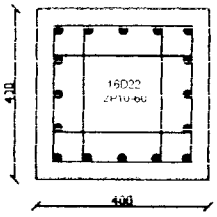

POT.II-II

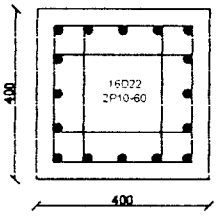

POT.III-III

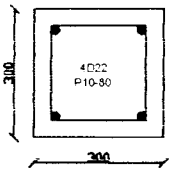

POT.IV-IV

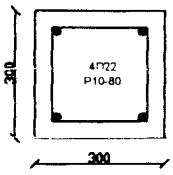

POT.V-V

KOLOM K.17

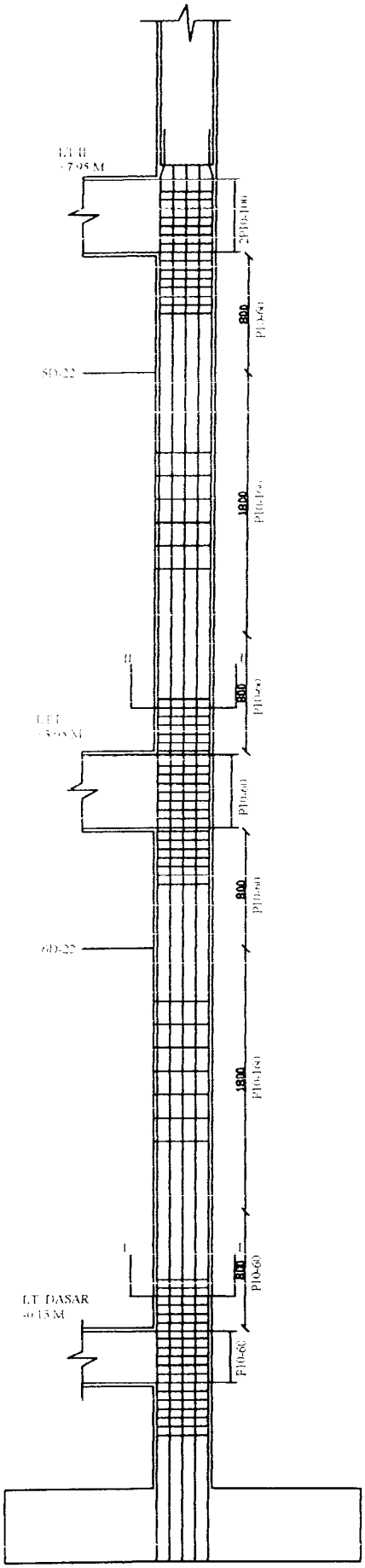

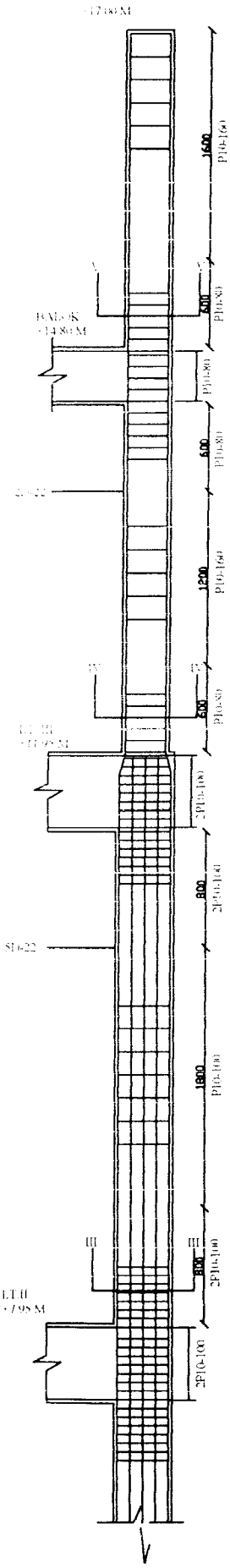

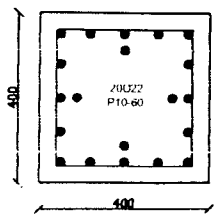

POT.I-I

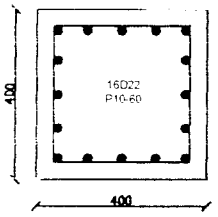

POT.II-II

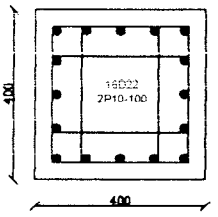

POT.III-III

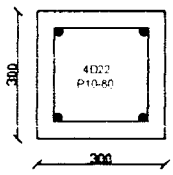

POT.IV-IV

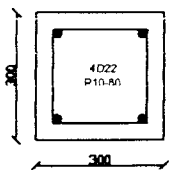

POT.V-V

KOLOM K.19

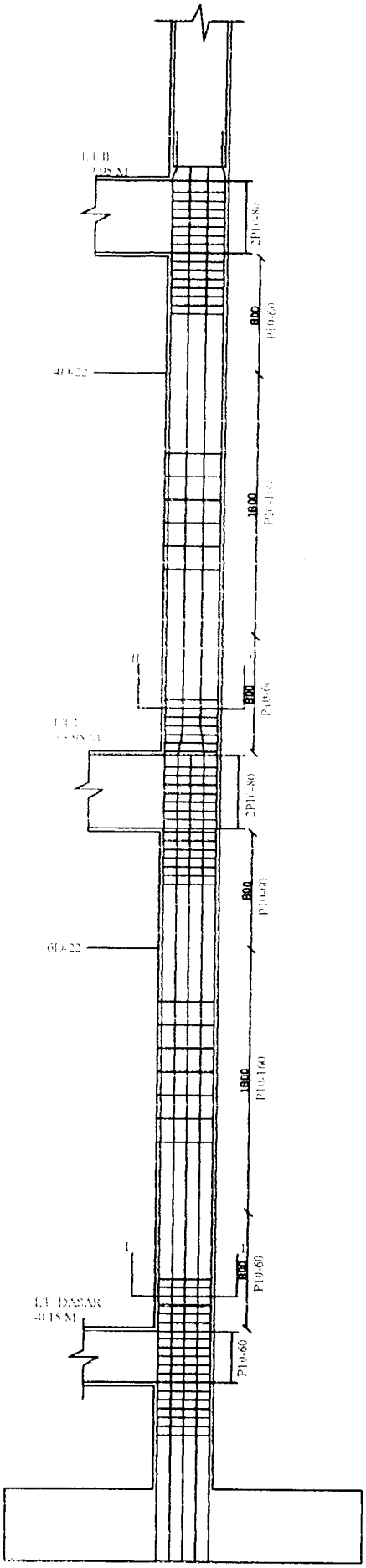

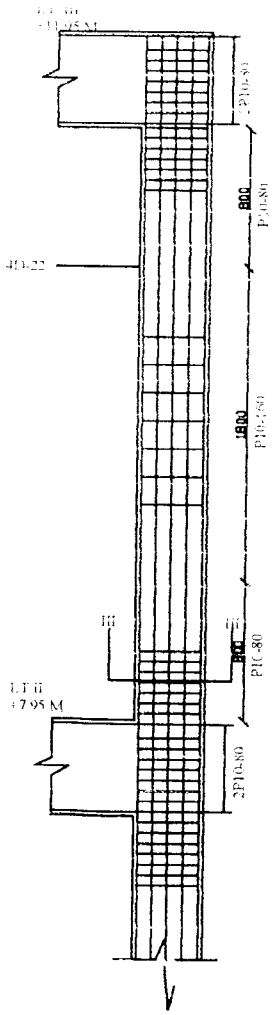

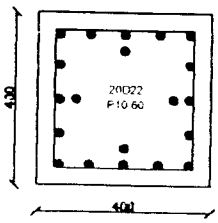

POT.I-I

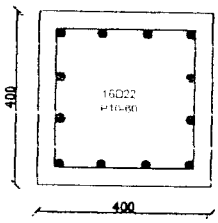

POT.II-II

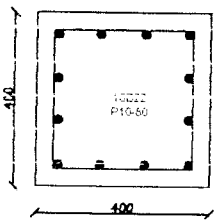

POT.III-III

KOLOM K.20

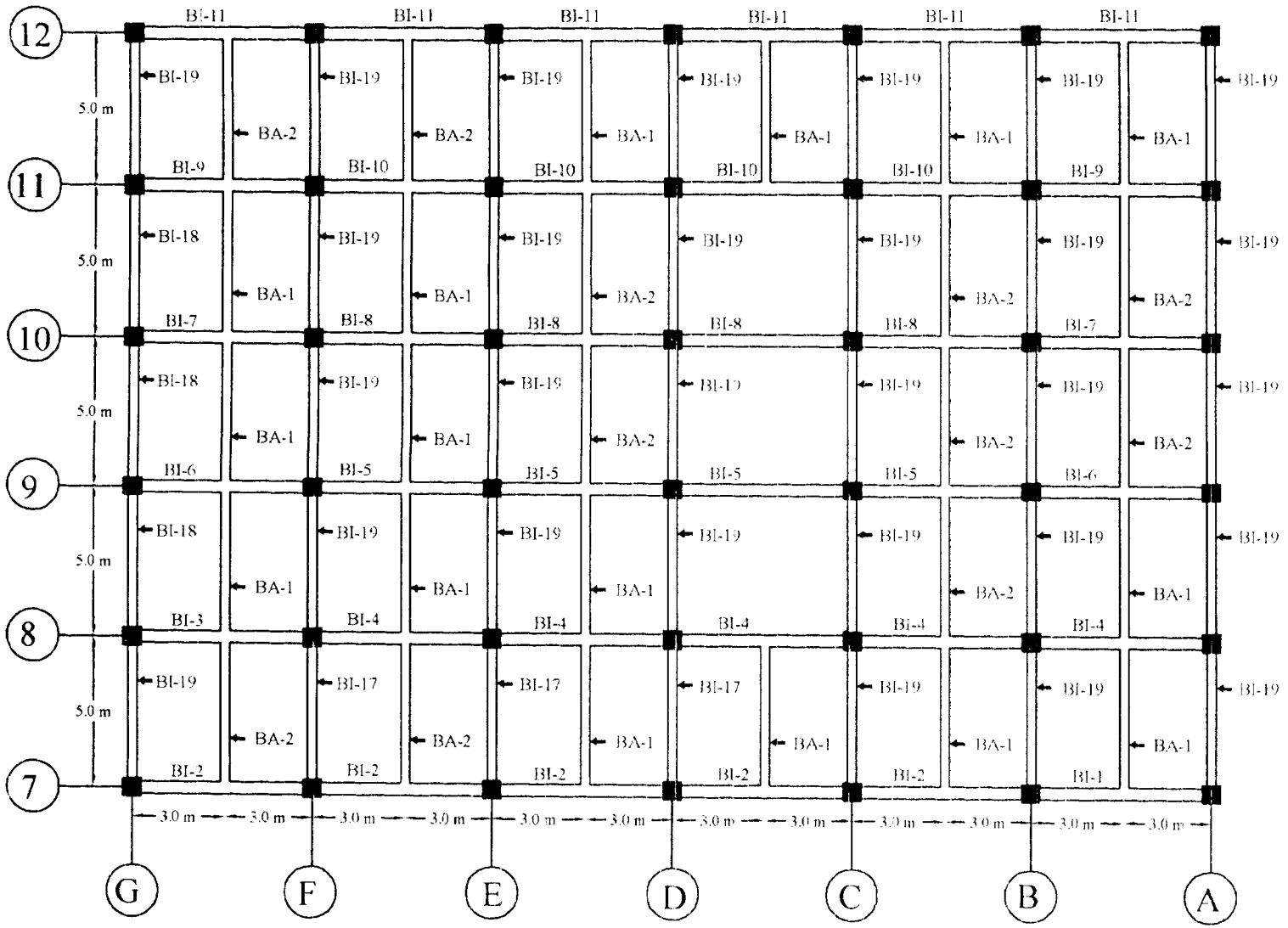

UNIVERSITAS ISLAM INDONESIA

TUGAS AKHIR
REDISAIN PROYEK
PEMBANGUNAN
PASAR RAKYAT
TELUK KUANTAN
TAHAP - 2

JUDUL GAMBAR :
DENAH BALOK
LANTAI 1

DIGAMBAR OLEH :
FAJAR WIRIADI
98 511 133

DIPERIKSA OLEH :

IR. ILMAN NOOR, MSCE

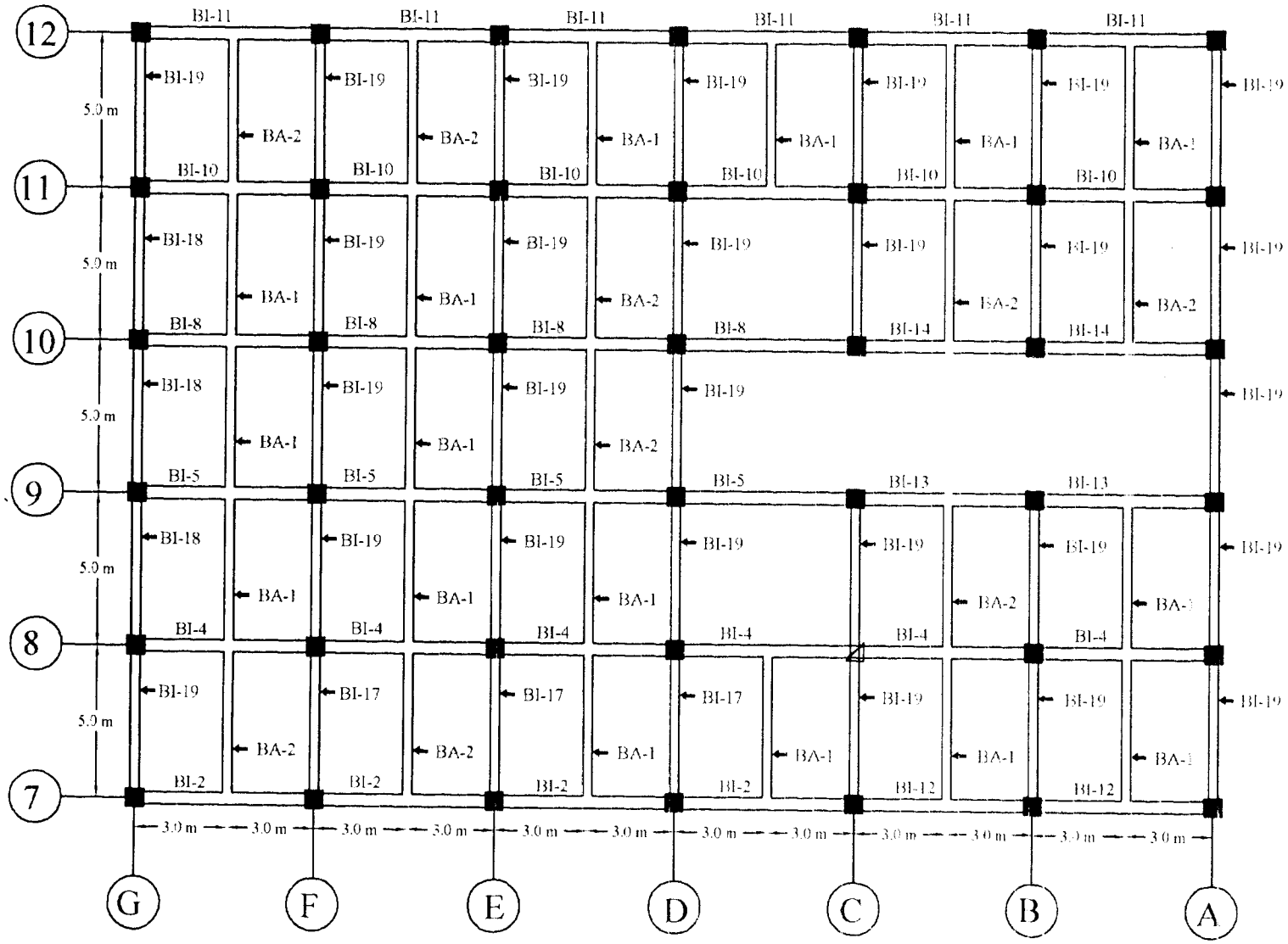

UNIVERSITAS ISLAM INDONESIA

TUGAS AKHIR
REDISAIN PROYEK
PEMBANGUNAN
PASAR RAKYAT
TELUK KUANTAN
TAHAP - 2

JUDUL GAMBAR :
DENAH BALOK
LANTAI 2

DIGAMBAR OLEH :
FAJAR WIRIADI
98 511 133

DIPERIKSA OLEH :

IR. ILMAN NOOR, MSCE

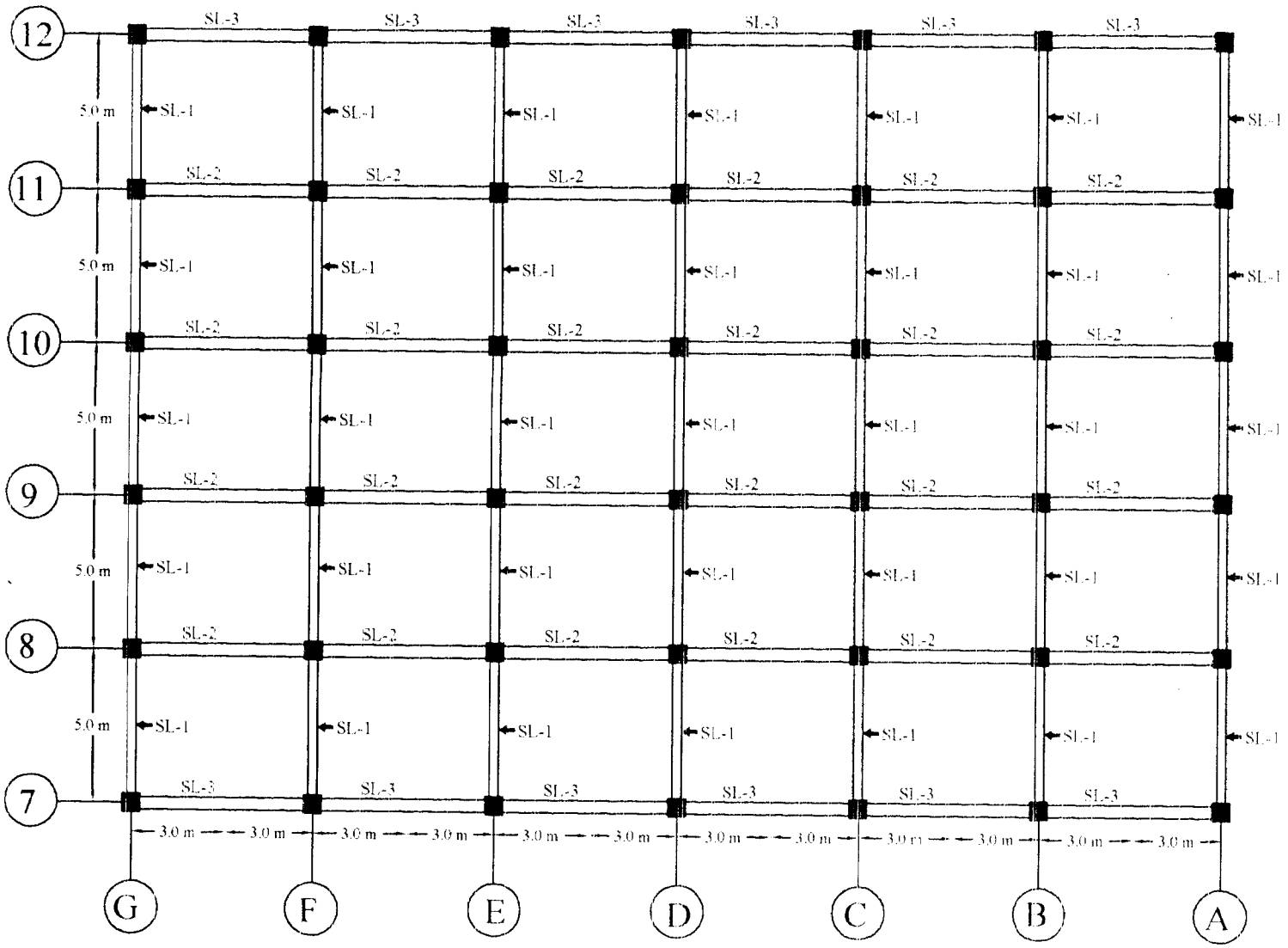

UNIVERSITAS ISLAM INDONESIA

TUGAS AKHIR
REDISAIN PROYEK
PEMBANGUNAN
PASAR RAKYAT
TELUK KUANTAN
TAHAP - 2

JUDUL GAMBAR :
DENAH PERLETAKAN
SLOOF

DIGAMBAR OLEH :
FAJAR WIRIADI
98 511 133

DIPERIKSA OLEH :

IR. ILMAN NOOR, MSCE

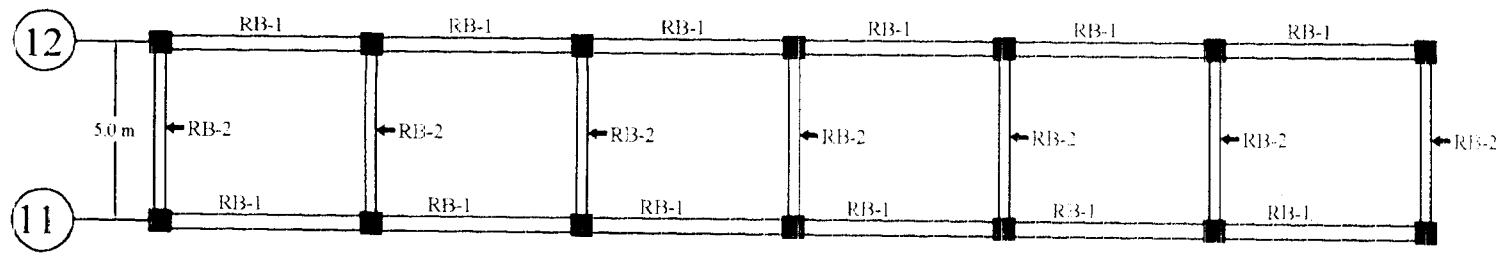

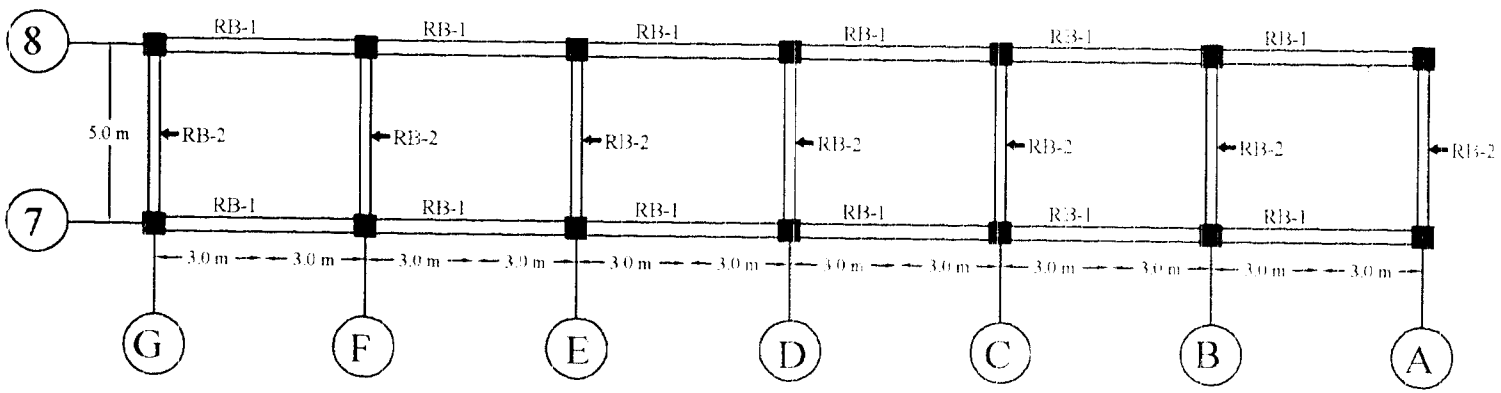

UNIVERSITAS ISLAM INDONESIA

TUGAS AKHIR
REDISAIN PROYEK
PEMBANGUNAN
PASAR RAKYAT
TELUK KUANTAN
TAHAP - 2

JUDUL GAMBAR :
DENAH PERLETAKAN
RING BALOK

DIGAMBAR OLEH :
FAJAR WIRIADI
98 511 133

DIPERIKSA OLEH :

IR. ILMAN NOOR, MSCE

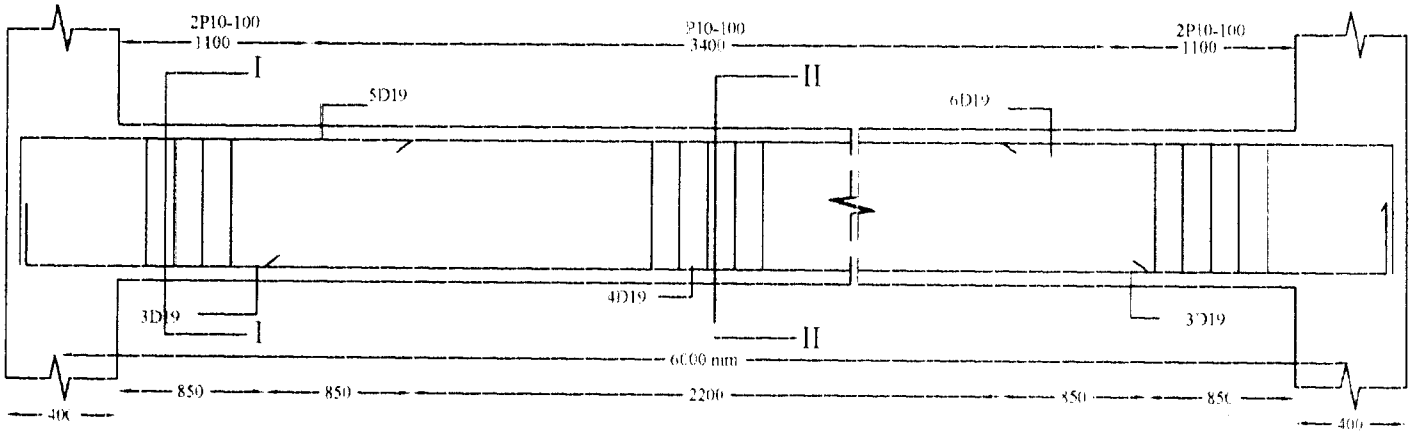

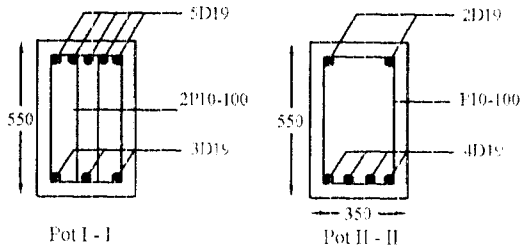

TUGAS AKHIR
REDISAIN PROYEK
PEMBANGUNAN
PASAR RAKYAT
TELUK KUANTAN
TAHAP - 2

JUDUL GAMBAR :
DETAIL PENULANGAN
BALOK INDUK - I

DIGAMBAR OLEH :
FAJAR WIRIADI
98 511 133

DIPERIKSA OLEH :

IR. ILMAN NOOR, MSCE

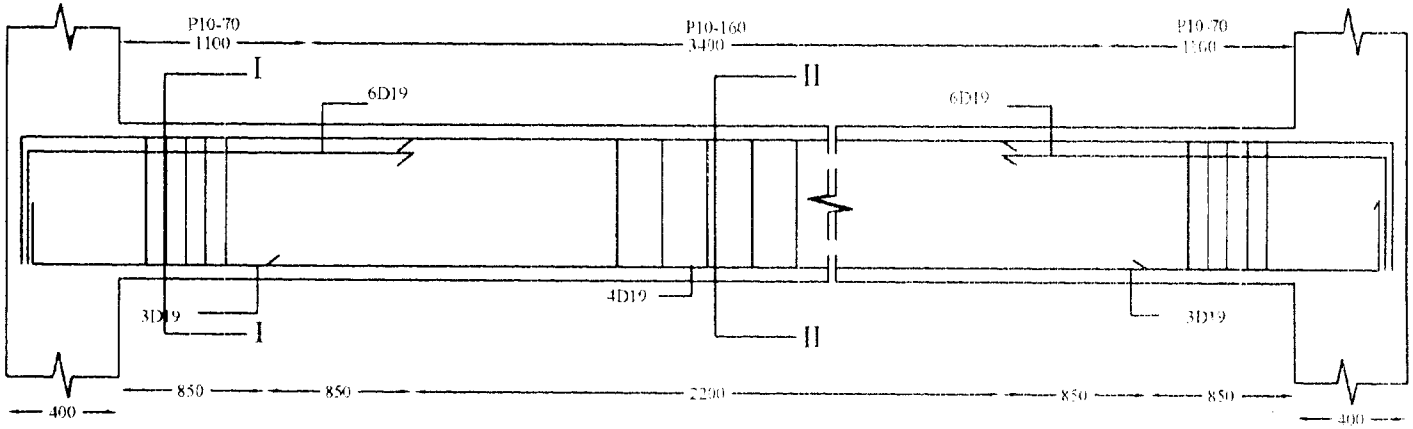

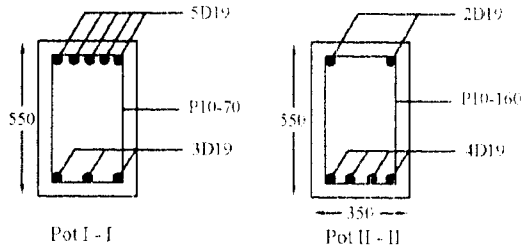

TUGAS AKHIR
REDISAIN PROYEK
PEMBANGUNAN
PASAR RAKYAT
TELUK KUANTAN
TAHAP - 2

JUDUL GAMBAR :
DETAIL PENULANGAN
BALOK INDUK - 2

DIGAMBAR OLEH :
FAJAR WIRIADI
98 511 133

DIPERIKSA OLEH :

IR. ILMAN NOOR, MSCE

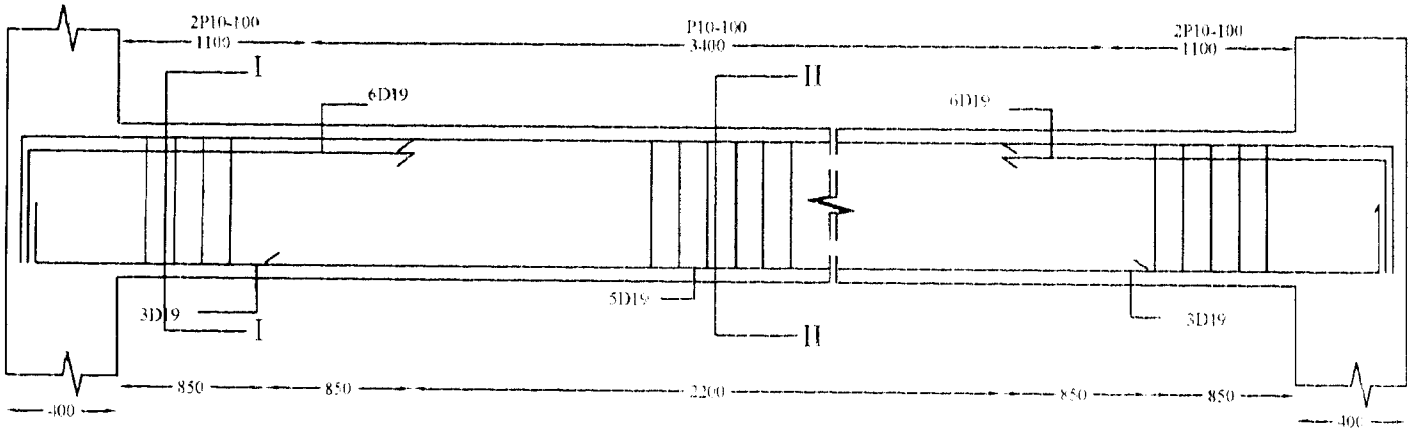

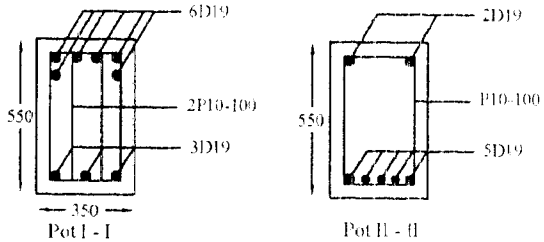

TUGAS AKHIR
REDISAIN PROYEK
PEMBANGUNAN
PASAR RAKYAT
TELUK KUANTAN
TAHAP - 2

JUDUL GAMBAR :
DETAIL PENULANGAN
BALOK INDUK - 4

DIGAMBAR OLEH :
FAJAR WIRIADI
98 511 133

DIPERIKSA OLEH :

IR. ILMAN NOOR, MSCE

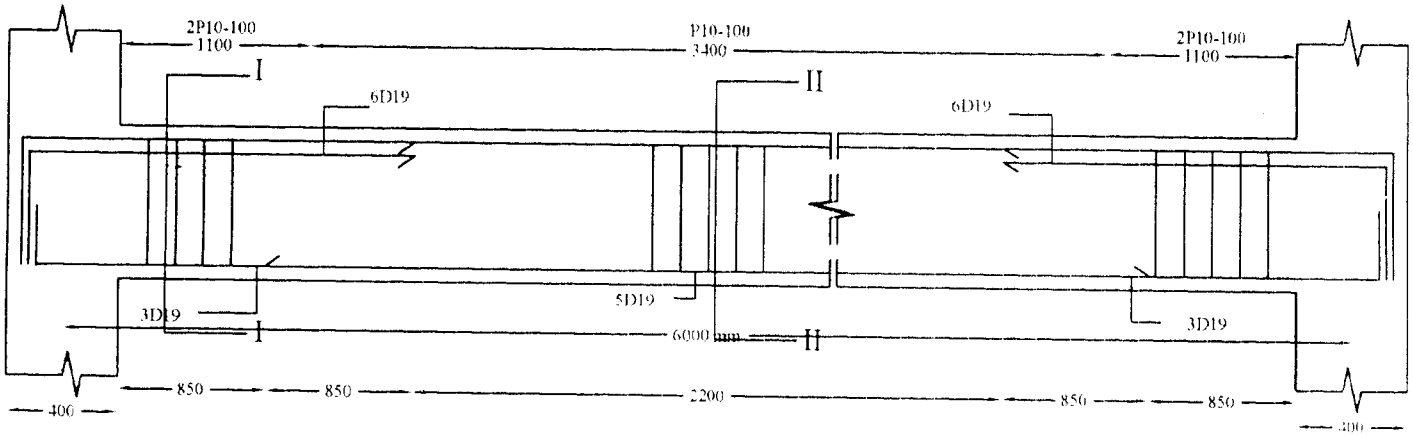

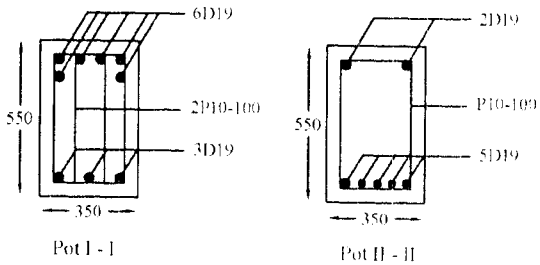

TUGAS AKHIR
REDISAIN PROYEK
PEMBANGUNAN
PASAR RAKYAT
TELUK KUANTAN
TAHAP - 2

JUDUL GAMBAR :
DETAIL PENULANGAN
BALOK INDUK - 5

DIGAMBAR OLEH :
FAJAR WIRIADI
98 511 133

DIPERIKSA OLEH :

IR. ILMAN NOOR, MSCE

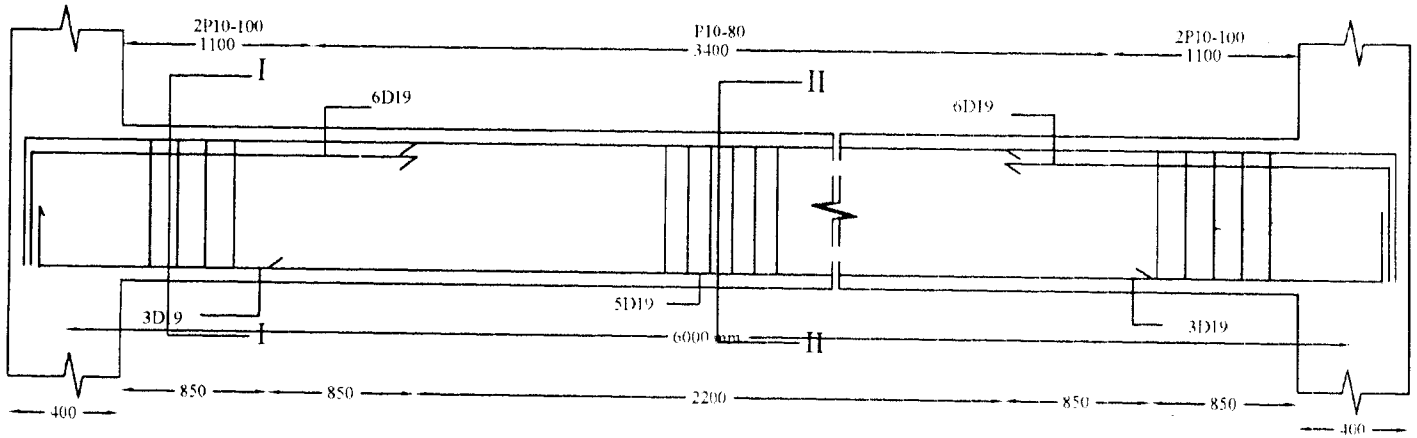

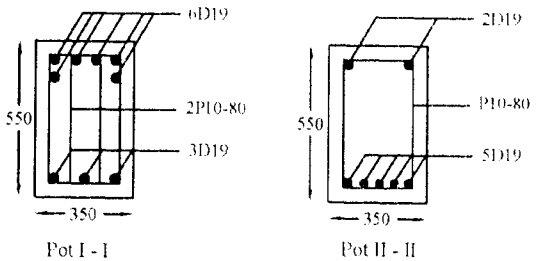

Pot I - I

Pot II - II

UNIVERSITAS ISLAM INDONESIA

TUGAS AKHIR
REDISAIN PROYEK
PEMBANGUNAN
PASAR RAKYAT
TELUK KUANTAN
TAHAP - 2

JUDUL GAMBAR :
DETAIL PENULANGAN
BALOK INDUK - 6

DIGAMBAR OLEH :
FAJAR WIRIADI
98 511 133

DIPERIKSA OLEH :

IR. ILMAN NOOR, MSCE

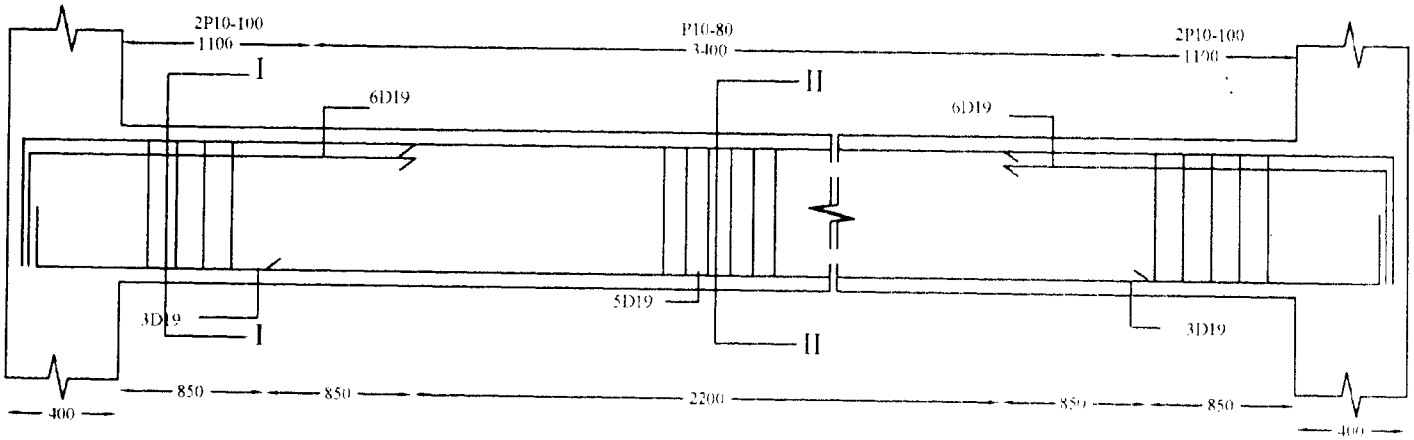

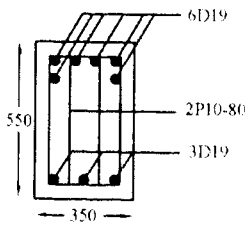

Pot I - I

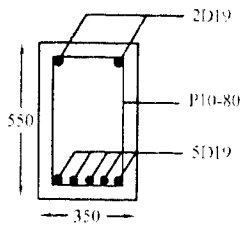

Pot II - II

UNIVERSITAS ISLAM INDONESIA

TUGAS AKHIR
REDISAIN PROYEK
PEMBANGUNAN
PASAR RAKYAT
TELUK KUANTAN
TAHAP - 2

JUDUL GAMBAR :
DETAIL PENULANGAN
BALOK INDUK - 7

DIGAMBAR OLEH :
FAJAR WIRIADI
98 511 133

DIPERIKSA OLEH :

IR. ILMAN NOOR, MSCE

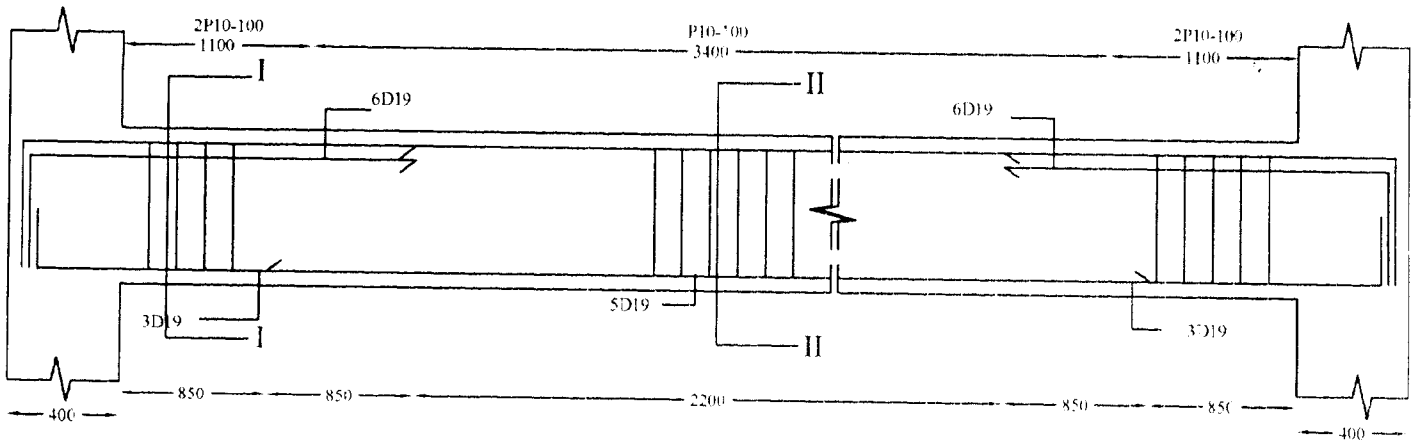

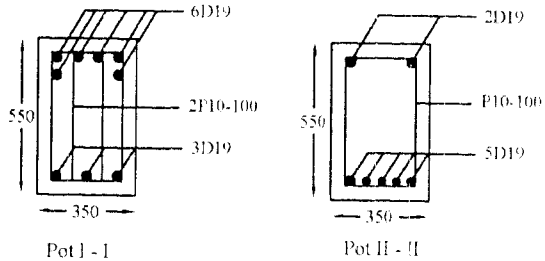

TUGAS AKHIR
REDISAIN PROYEK
PEMBANGUNAN
PASAR RAKYAT
TELUK KUANTAN
TAHAP - 2

JUDUL GAMBAR :
DETAIL PENULANGAN
BALOK INDUK - 8

DIGAMBAR OLEH :
FAJAR WIRIADI
98 511 133

DIPERIKSA OLEH :

IR. ILMAN NOOR, MSCE

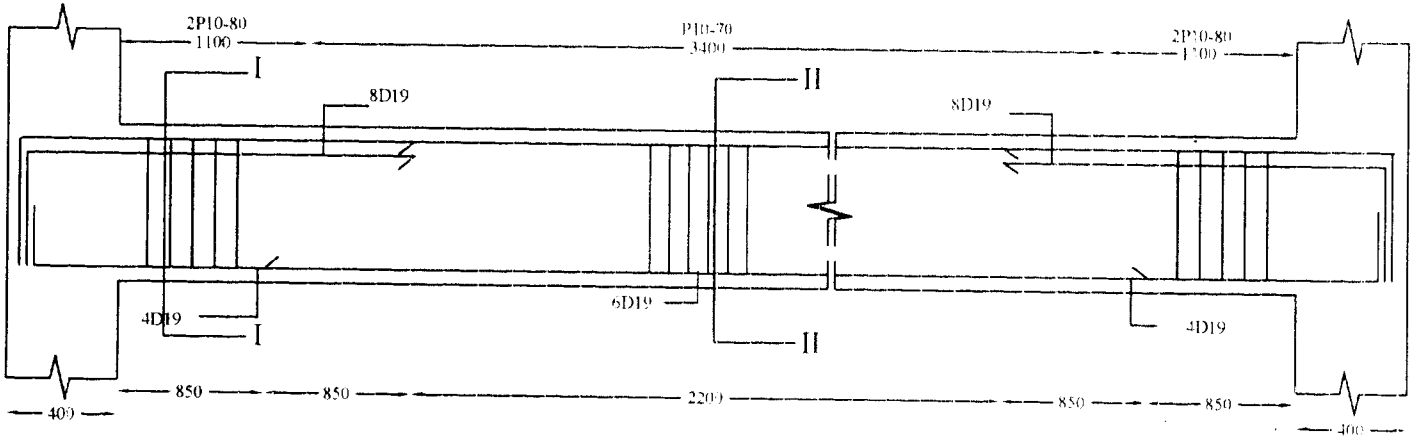

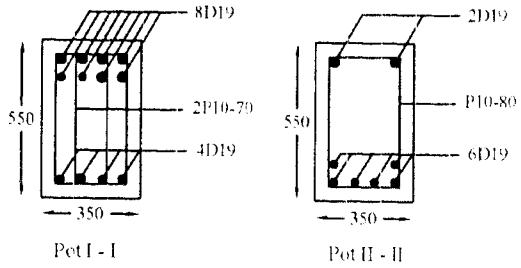

TUGAS AKHIR
REDISAIN PROYEK
PEMBANGUNAN
PASAR RAKYAT
TELUK KUANTAN
TAHAP - 2

JUDUL GAMBAR :
DETAIL PENULANGAN
BALOK INDUK - 9

DIGAMBAR OLEH :
FAJAR WIRIADI
98 511 133

DIPERIKSA OLEH :

IR. ILMAN NOOR, MSCE

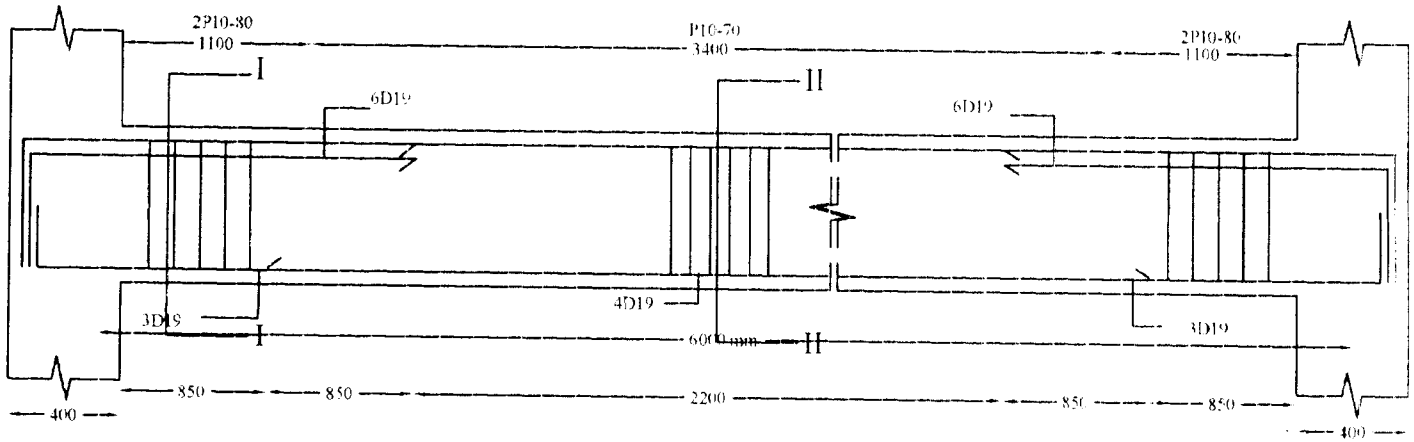

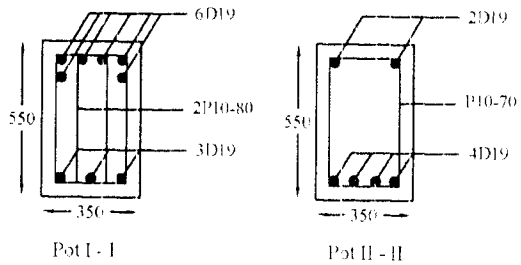

TUGAS AKHIR
REDISAIN PROYEK
PEMBANGUNAN
PASAR RAKYAT
TELUK KUANTAN
TAHAP - 2

JUDUL GAMBAR :
DETAIL PENULANGAN
BALOK INDUK - 11

DIGAMBAR OLEH :
FAJAR WIRIADI
98 511 133

DIPERIKSA OLEH :

IR. ILMAN NOOR, MSCE

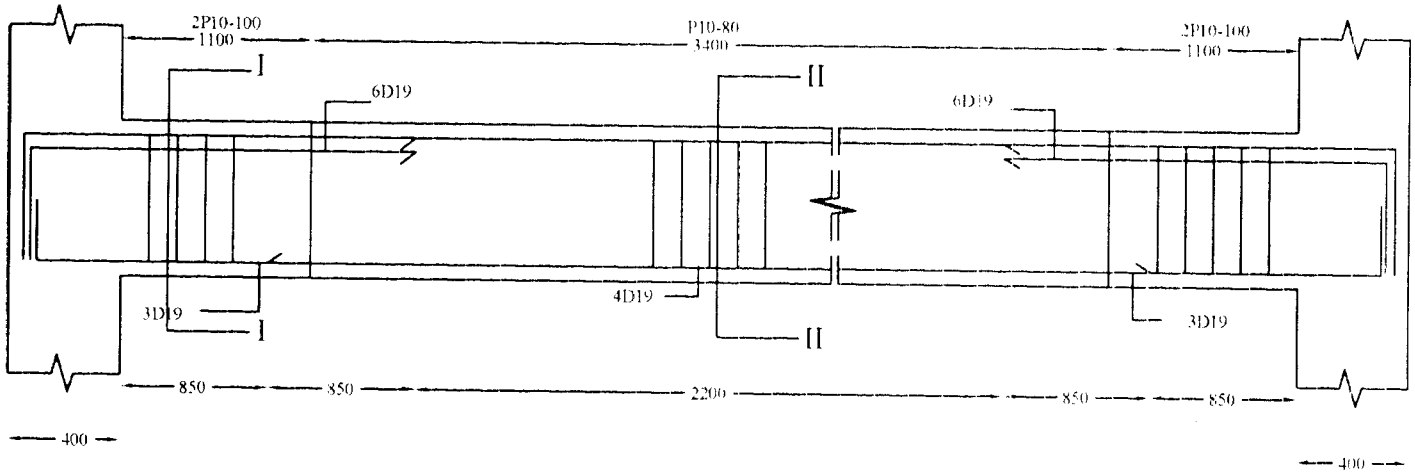

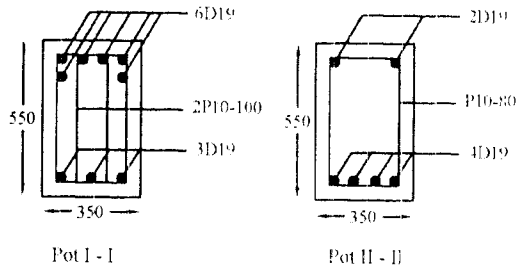

TUGAS AKHIR
REDISAIN PROYEK
PEMBANGUNAN
PASAR RAKYAT
TELUK KUANTAN
TAHAP - 2

JUDUL GAMBAR :
DETAIL PENULANGAN
BALOK INDUK - 12

DIGAMBAR OLEH :
FAJAR WIRIADI
98 511 133

DIPERIKSA OLEH :

IR. ILMAN NOOR, MSCE

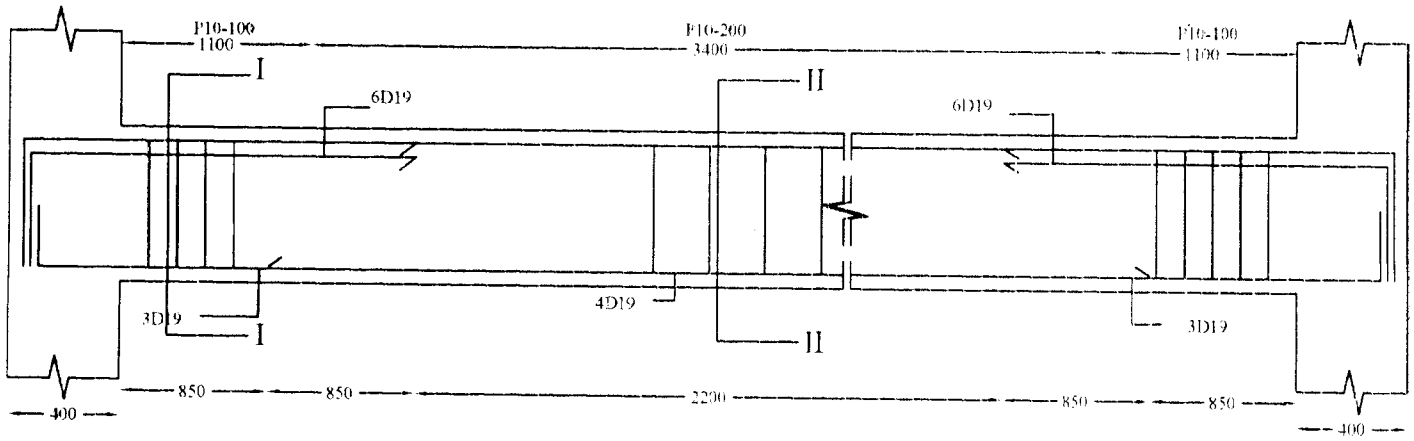

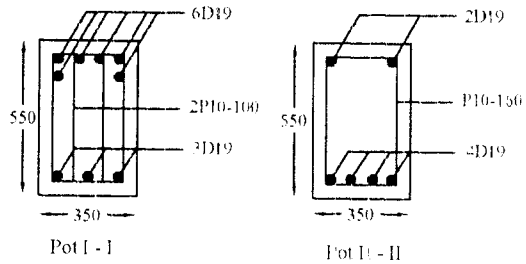

TUGAS AKHIR
REDISAIN PROYEK
PEMBANGUNAN
PASAR RAKYAT
TELUK KUANTAN
TAHAP - 2

JUDUL GAMBAR :
DETAIL PENULANGAN
BALOK INDUK - 14

DIGAMBAR OLEH :
FAJAR WIRIADI
98 511 133

DIPERIKSA OLEH :

IR. ILMAN NOOR, MSCE

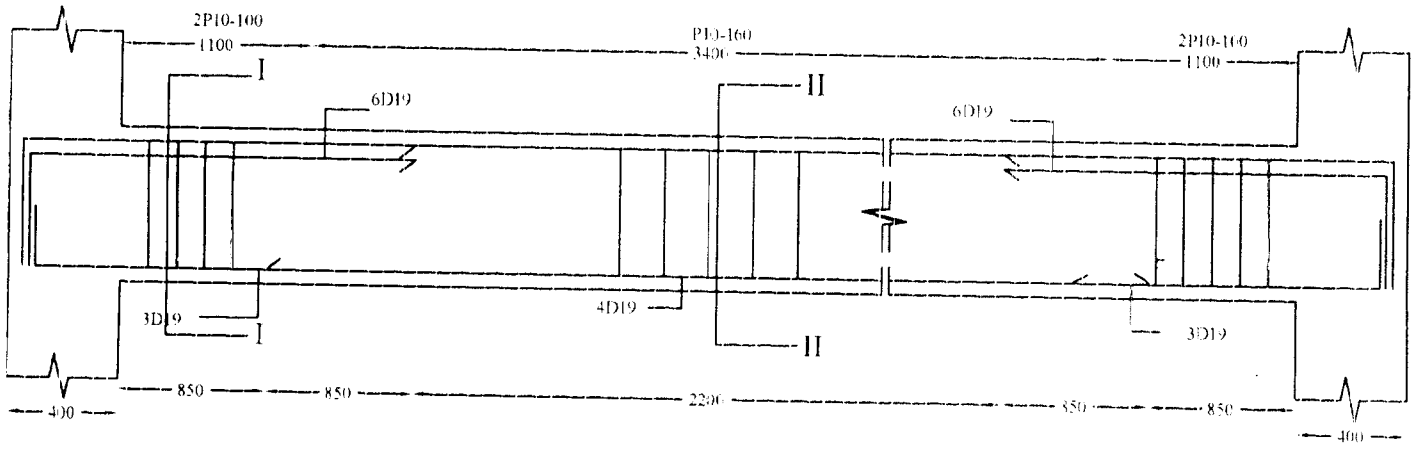

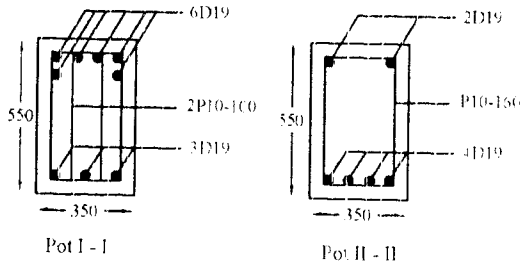

TUGAS AKHIR
REDISAIN PROYEK
PEMBANGUNAN
PASAR RAKYAT
TELUK KUANTAN
TAHAP - 2

JUDUL GAMBAR :
DETAIL PENULANGAN
BALOK INDUK - 15

DIGAMBAR OLEH :
FAJAR WIRIADI
98 511 133

DIPERIKSA OLEH :

IR. ILMAN NOOR, MSCE

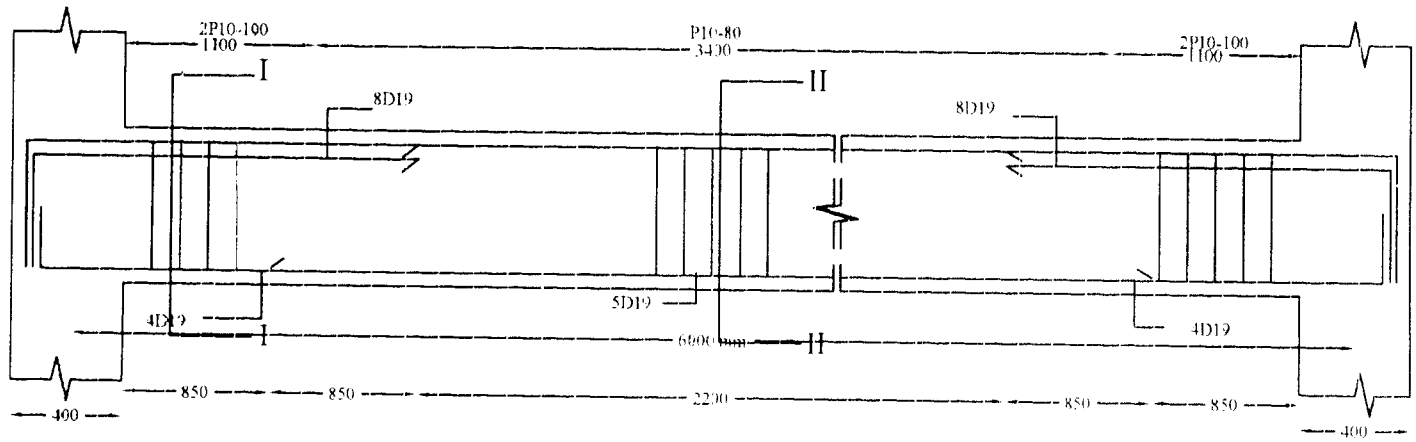

F-G LT 3

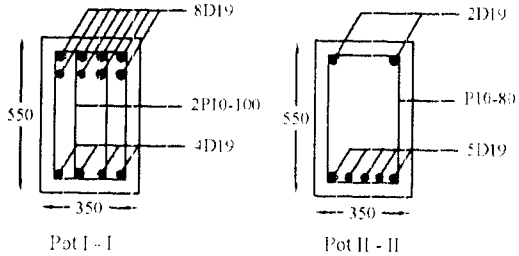

TUGAS AKHIR
REDISAIN PROYEK
PEMBANGUNAN
PASAR RAKYAT
TELUK KUANTAN
TAHAP - 2

JUDUL GAMBAR :
DETAIL PENULANGAN
BALOK INDUK - 16

DIGAMBAR OLEH :
FAJAR WIRIADI
98 511 133

DIPERIKSA OLEH :

IR. ILMAN NOOR, MSCE

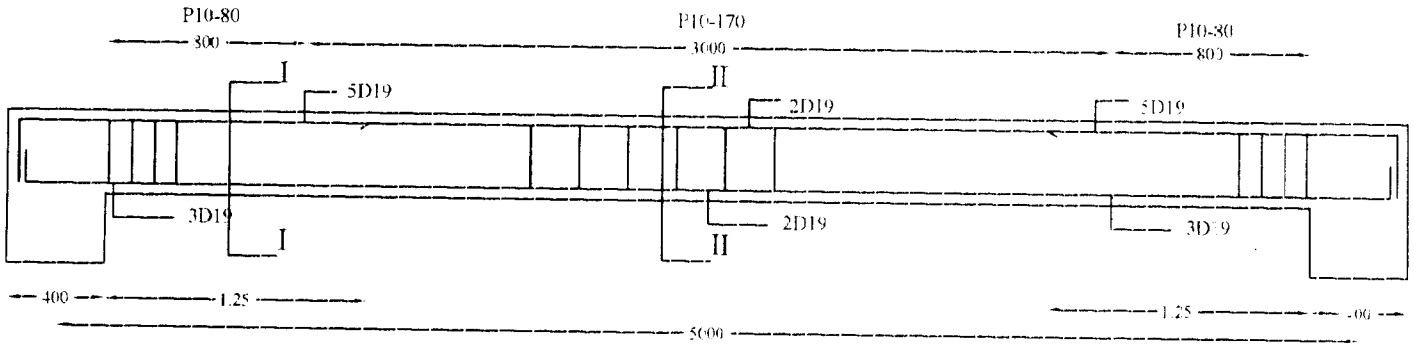

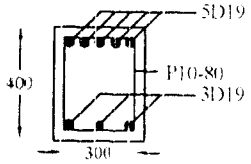

POT I-I

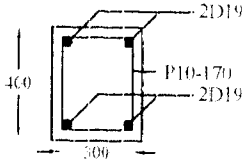

POT II-II

UNIVERSITAS ISLAM INDONESIA

TUGAS AKHIR
REDISAIN PROYEK
PEMBANGUNAN
PASAR RAKYAT
TELUK KUANTAN
TAHAP - 2

JUDUL GAMBAR :
DETAIL PENULANGAN
BALOK INDUK - 17

DIGAMBAR OLEH :
FAJAR WIRIADI
98 511 133

DIPERIKSA OLEH :

IR. ILMAN NOOR, MSCE

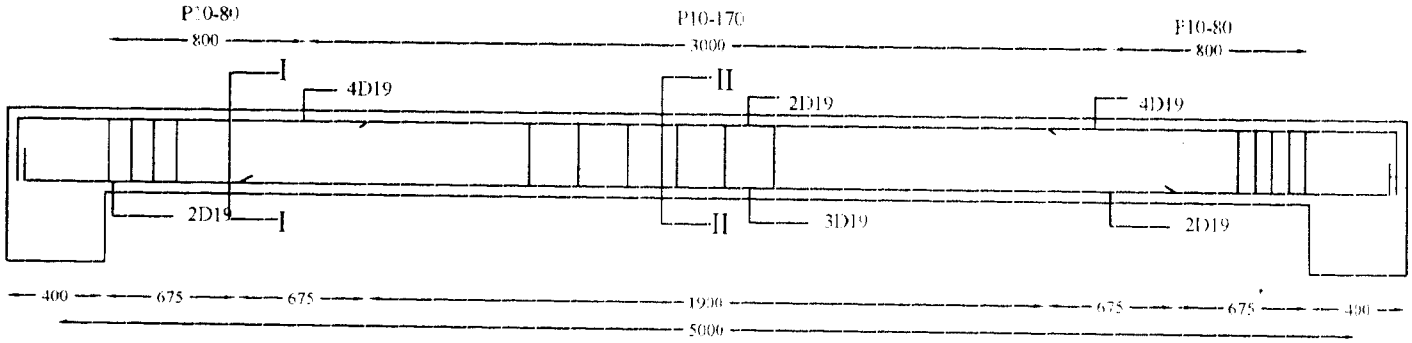

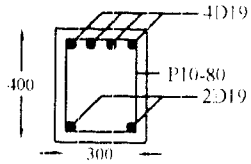

POT I-I

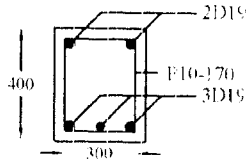

POT II-II

UNIVERSITAS ISLAM INDONESIA

TUGAS AKHIR
REDISAIN PROYEK
PEMBANGUNAN
PASAR RAKYAT
TELUK KUANTAN
TAHAP - 2

JUDUL GAMBAR :
DETAIL PENULANGAN
BALOK INDUK - 18

DIGAMBAR OLEH :
FAJAR WIRIADI
98 511 133

DIPERIKSA OLEH :

IR. ILMAN NOOR, MSCE

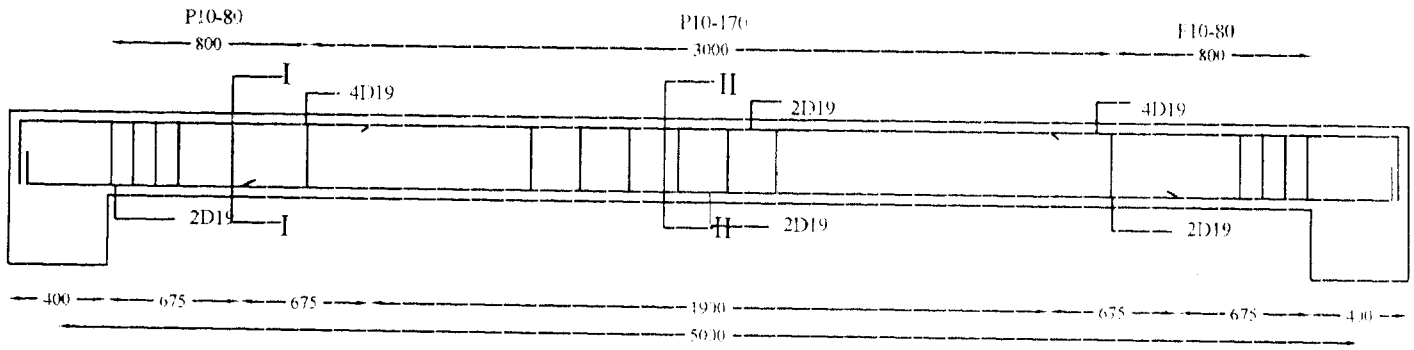

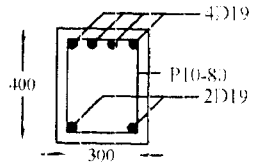

POT I-I

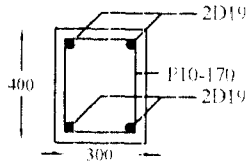

POT II-II

UNIVERSITAS ISLAM INDONESIA

TUGAS AKHIR
REDISAIN PROYEK
PEMBANGUNAN
PASAR RAKYAT
TELUK KUANTAN
TAHAP - 2

JUDUL GAMBAR :
DETAIL PENULANGAN
BALOK INDUK - 19

DIGAMBAR OLEH :
FAJAR WIRIADI
98 511 133

DIPERIKSA OLEH :

IR. ILMAN NOOR, MSCE

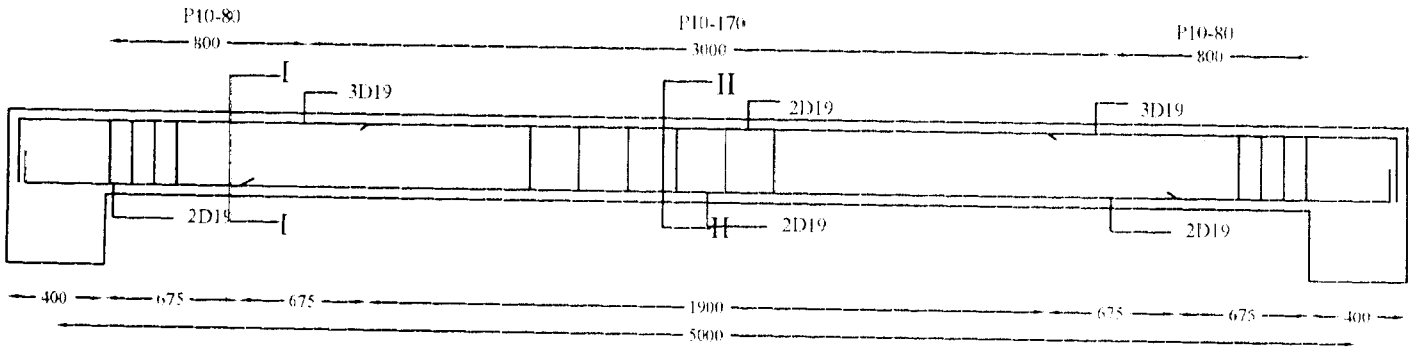

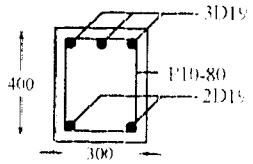

POT I-I

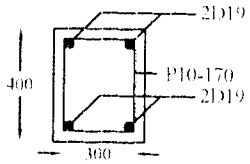

POT II-II

UNIVERSITAS ISLAM INDONESIA

TUGAS AKHIR
REDISAIN PROYEK
PEMBANGUNAN
PASAR RAKYAT
TELUK KUANTAN
TAHAP - 2

JUDUL GAMBAR :
DETAIL PENULANGAN
BALOK INDUK - 20

DIGAMBAR OLEH :
FAJAR WIRIADI
98 511 133

DIPERIKSA OLEH :

IR. ILMAN NOOR, MSCE

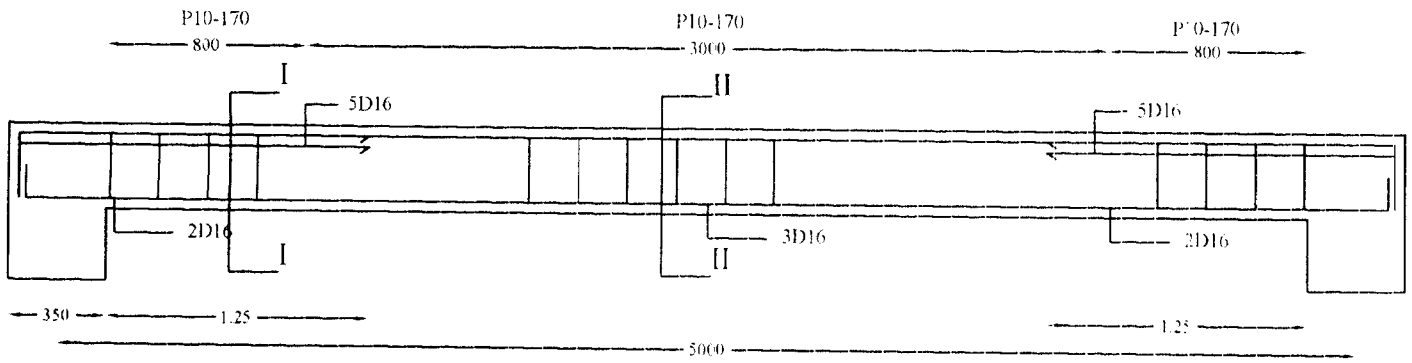

TUL BALOK ANAK
BA - 1

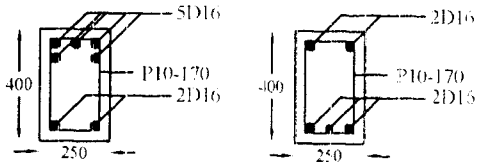

POT I-I POT II-II

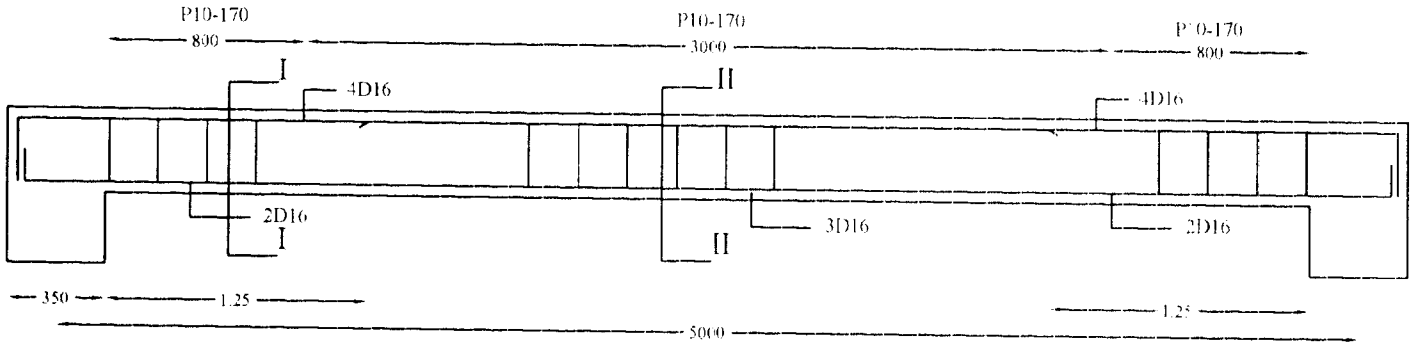

TUL BALOK ANAK
BA - 2

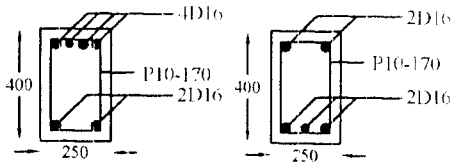

POT I-I POT II-II

UNIVERSITAS ISLAM INDONESIA

TUGAS AKHIR
REDISAIN PROYEK
PEMBANGUNAN
PASAR RAKYAT
TELUK KUANTAN
TAHAP - 2

JUDUL GAMBAR :
DETAIL PENULANGAN
BALOK ANAK

DIGAMBAR OLEH :
FAJAR WIRIADI
98 511 133

DIPERIKSA OLEH :

IR. ILMAN NOOR, MSCE

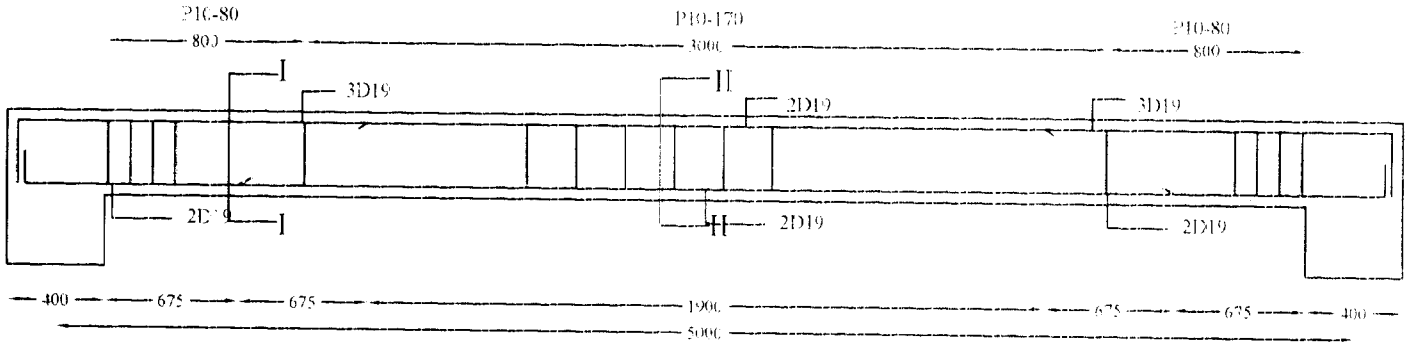

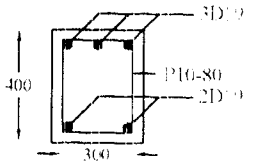

POT I-I

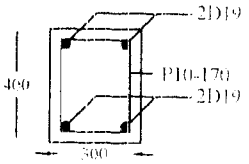

POT II-II

UNIVERSITAS ISLAM INDONESIA

TUGAS AKHIR
REDISAIN PROYEK
PEMBANGUNAN
PASAR RAKYAT
TELUK KUANTAN
TAHAP - 2

JUDUL GAMBAR :
DETAIL PENULANGAN
BALOK SLOOF - 1

DIGAMBAR OLEH :
FAJAR WIRIADI
98 511 133

DIPERIKSA OLEH :

IR. ILMAN NOOR, MSCE

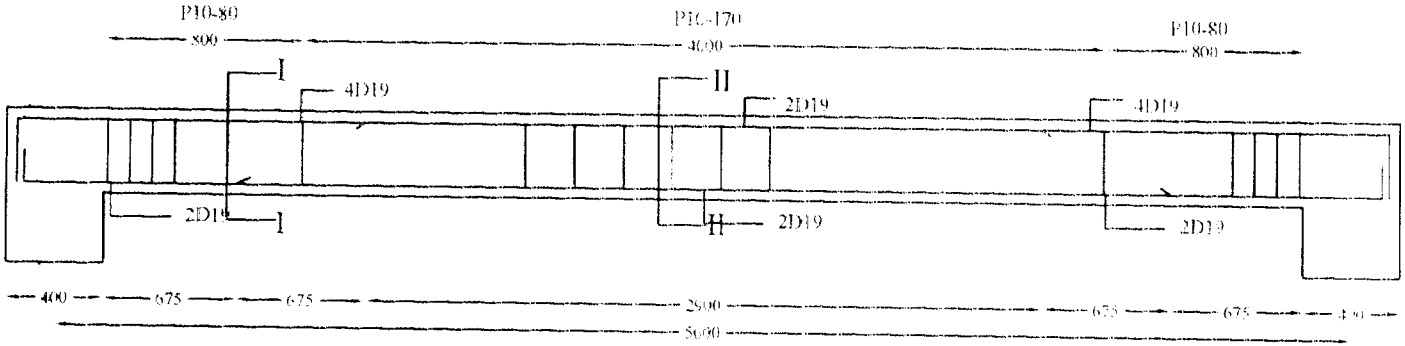

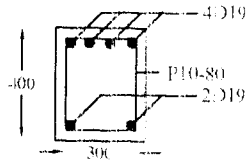

POT I-I

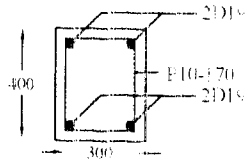

POT II-II

TUGAS AKHIR
REDISAIN PROYEK
PEMBANGUNAN
PASAR RAKYAT
TELUK KUANTAN
TAHAP - 2

JUDUL GAMBAR :
DETAIL PENULANGAN
BALOK SLOOF - 3

DIGAMBAR OLEH :
FAJAR WIRIADI
98 511 133

DIPERIKSA OLEH :

IR. ILMAN NOOR, MSCE

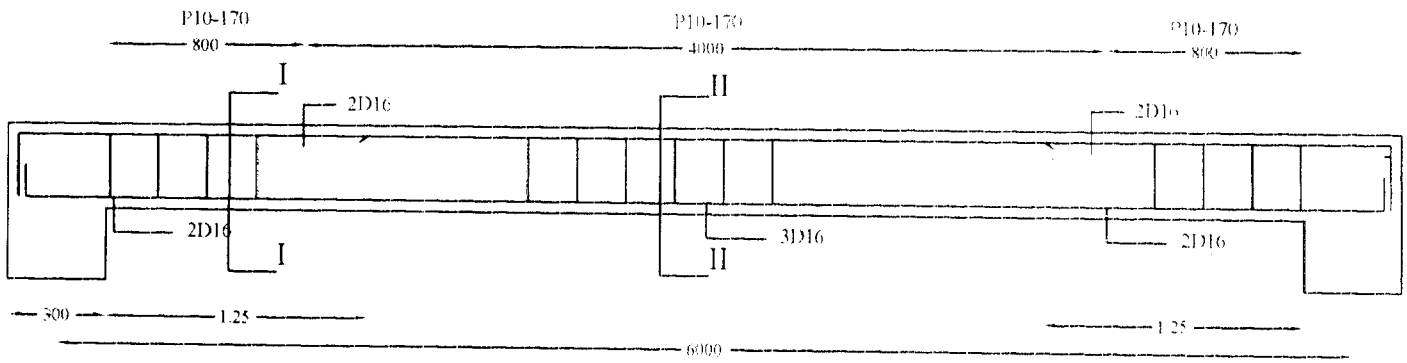

TUL RING BALOK - 1

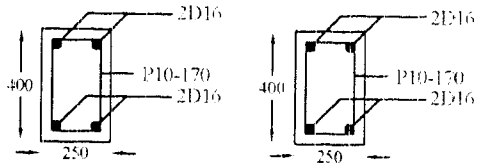

POT I-I POT II-II

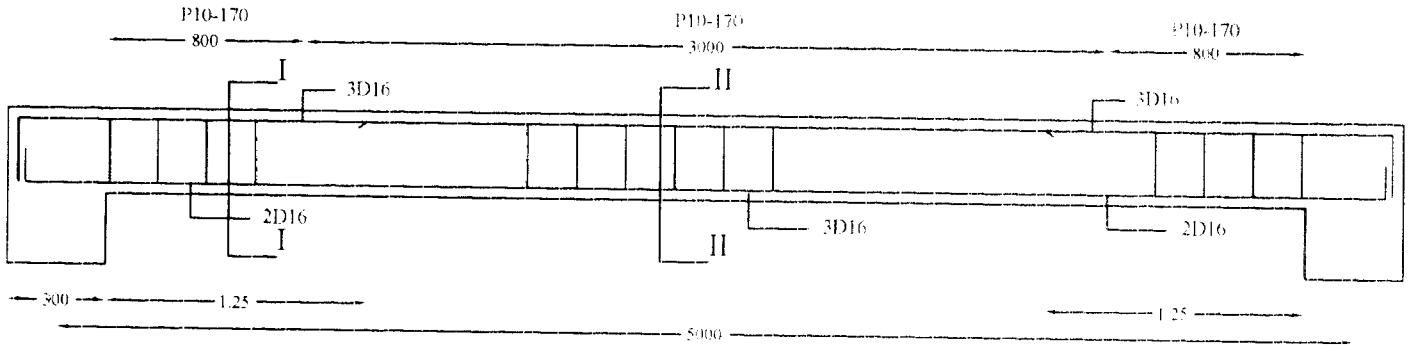

TUL RING BALOK - 2

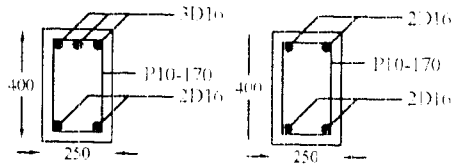

POT I-I POT II-II

UNIVERSITAS ISLAM INDONESIA

TUGAS AKHIR
REDISAIN PROYEK
PEMBANGUNAN
PASAR RAKYAT
TELUK KUANTAN
TAHAP - 2

JUDUL GAMBAR :
DETAIL PENULANGAN
RING BALOK

DIGAMBAR OLEH :
FAJAR WIRIADI
98 511 133

DIPERIKSA OLEH :

IR. ILMAN NOOR, MSCE

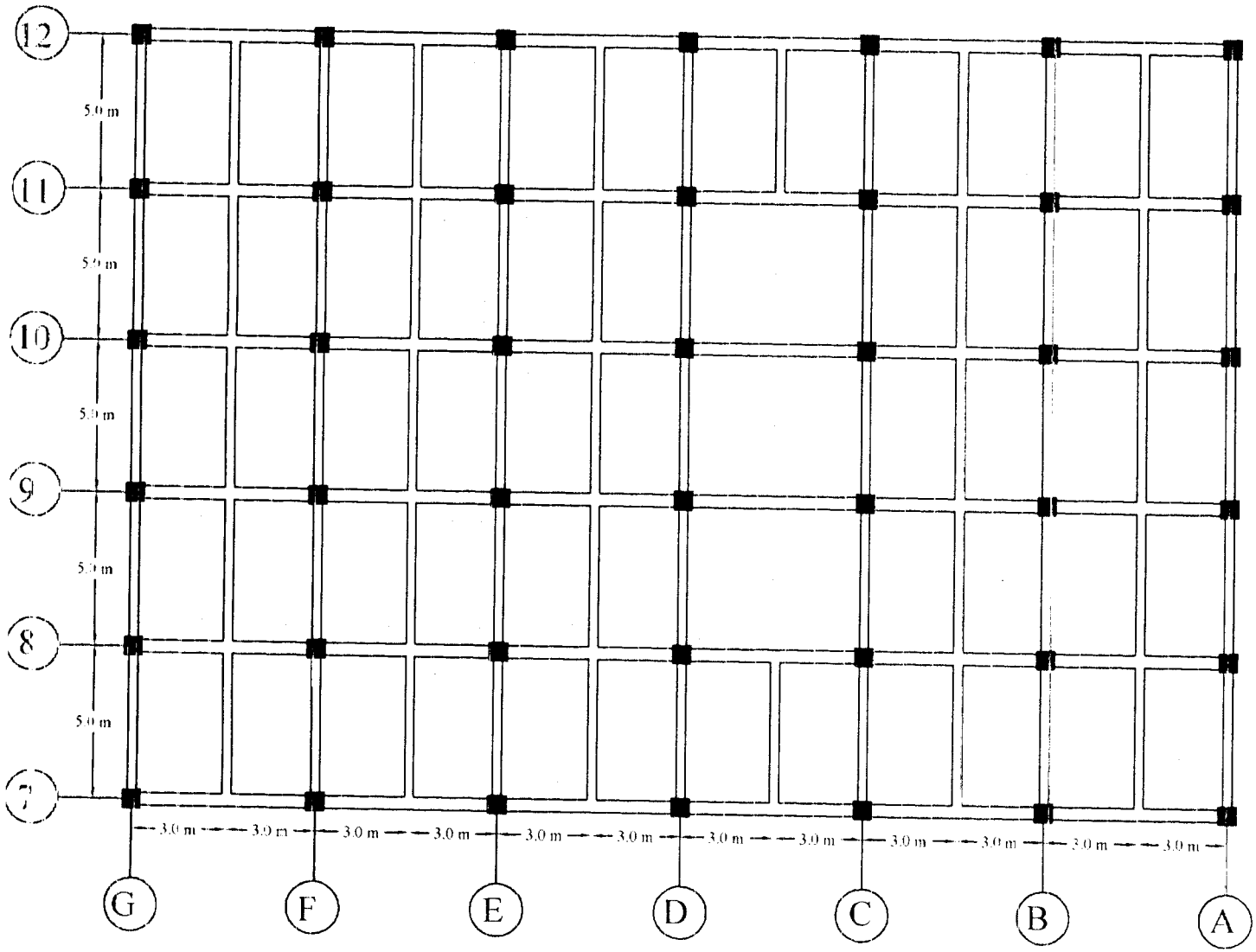

UNIVERSITAS ISLAM INDONESIA

TUGAS AKHIR
REDISAIN PROYEK
PEMBANGUNAN
PASAR RAKYAT
TELUK KUANTAN
TAHAP - 2

JUDUL GAMBAR :
DENAH
PELAT LANTAI
LT I

DIGAMBAR OLEH :
FAJAR WIRIADI
98 511 133

DIPERIKSA OLEH :

IR. ILMAN NOOR, MSCE

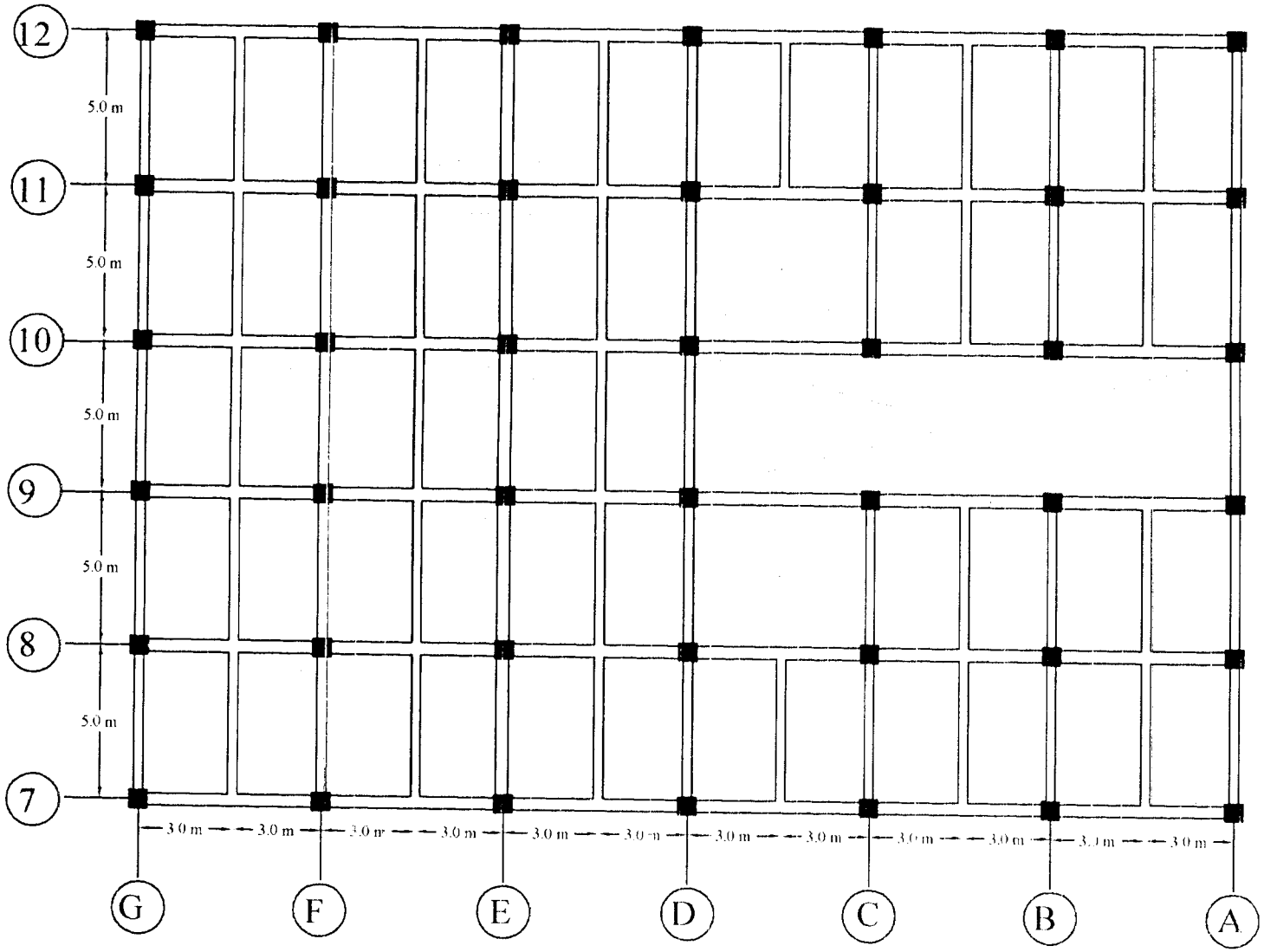

UNIVERSITAS ISLAM INDONESIA

TUGAS AKHIR
REDISAIN PROYEK
PEMBANGUNAN
PASAR RAKYAT
TELUK KUANTAN
TAHAP - 2

JUDUL GAMBAR :
DENAH
PELAT LANTAI
LT II

DIGAMBAR OLEH :
FAJAR WIRIADI
98 511 133

DIPERIKSA OLEH :

IR. ILMAN NOOR, MSCE

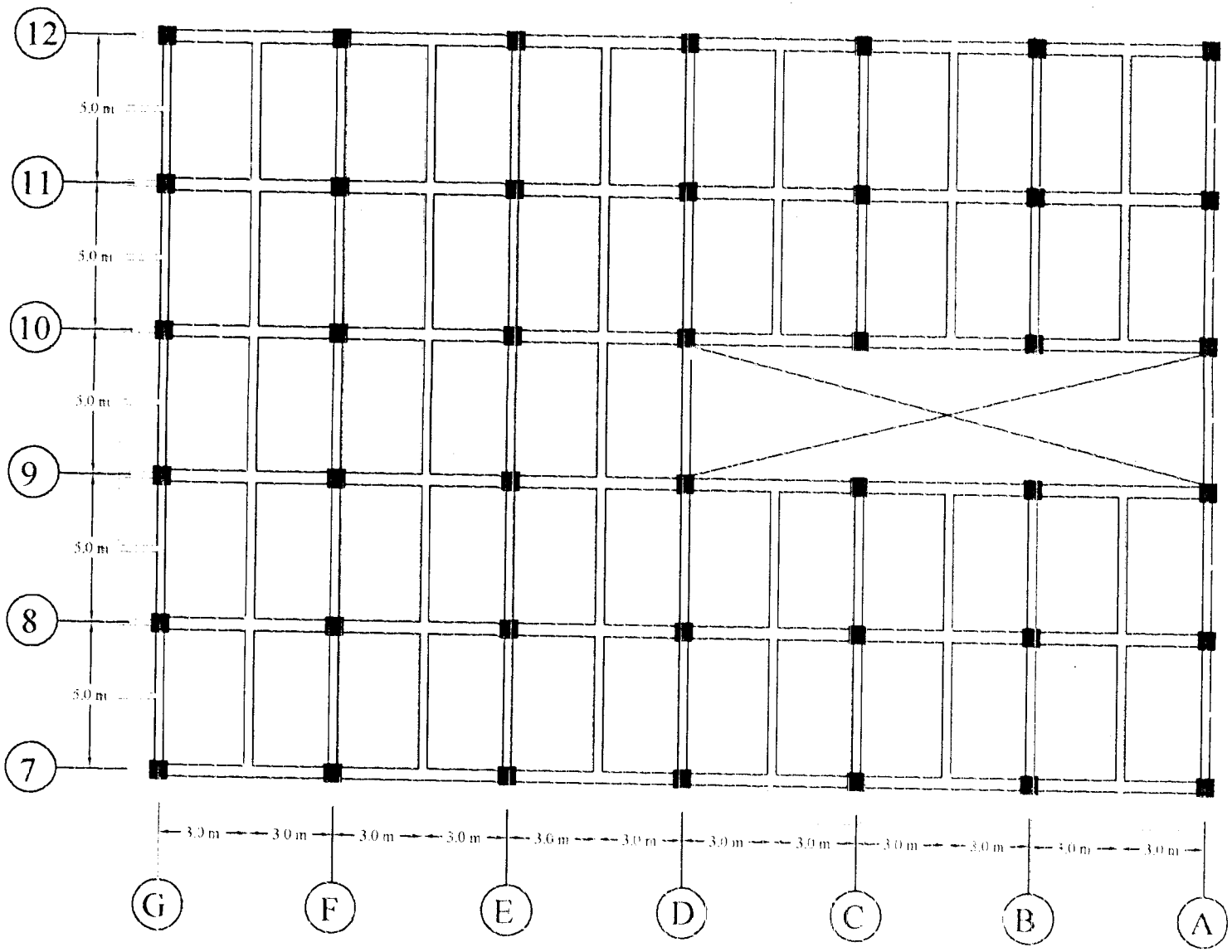

UNIVERSITAS ISLAM INDONESIA

TUGAS AKHIR
REDISAIN PROYEK
PEMBANGUNAN
PASAR RAKYAT
TELUK KUANTAN
TAHAP - 2

JUDUL GAMBAR :
RENCANA
PERLETAKAN BALOK -
KOLOM LT 3

DIGAMBAR OLEH :
FAJAR WIRIADI
98 511 133

DIPERIKSA OLEH :

IR. ILMAN NOOR, MSCE

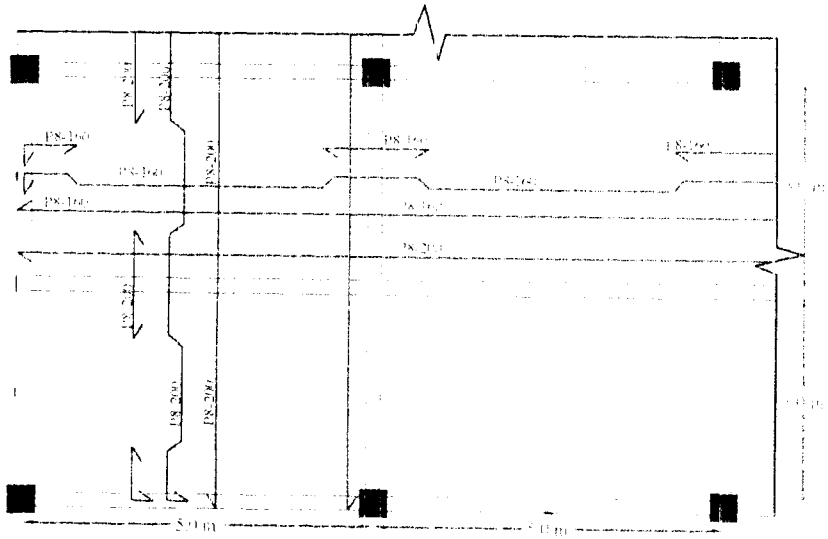

lx = 3 m
ly = 5 m
tul lx = tx = P8-80
tul ly = P8-100
tul ty = P8-100
tul bagi tx = P8-200
tul bagi ty = P8-200

DETAIL PENULANGAN
PELAT LT.I & LT.II

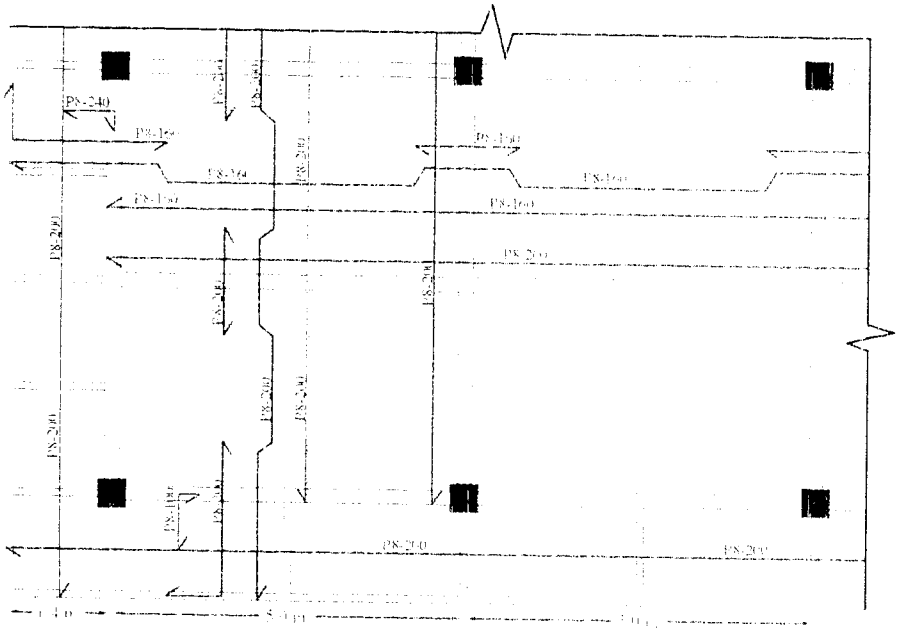

lx = 3 m
ly = 5 m
tul lx = tx = P8-80
tul ly = P8-100
tul ty = P8-100
tul bagi tx = P8-200
tul bagi ty = P8-200
kantilever :
Tul pokok = P8 - 60
Tul bagi = P8 - 200

DETAIL PENULANGAN
PELAT LT. III

UNIVERSITAS ISLAM INDONESIA

TUGAS AKHIR
REDISAIN PROYEK
PEMBANGUNAN
PASAR RAKYAT
TELUK KUANTAN
TAHAP - 2

JUDUL GAMBAR :
DETAIL PENULANGAN
PELAT LANTAI

DIGAMBAR OLEH :
FAJAR WIRIADI
98 511 133

DIPERIKSA OLEH :

IR. ILMAN NOOR, MSCE

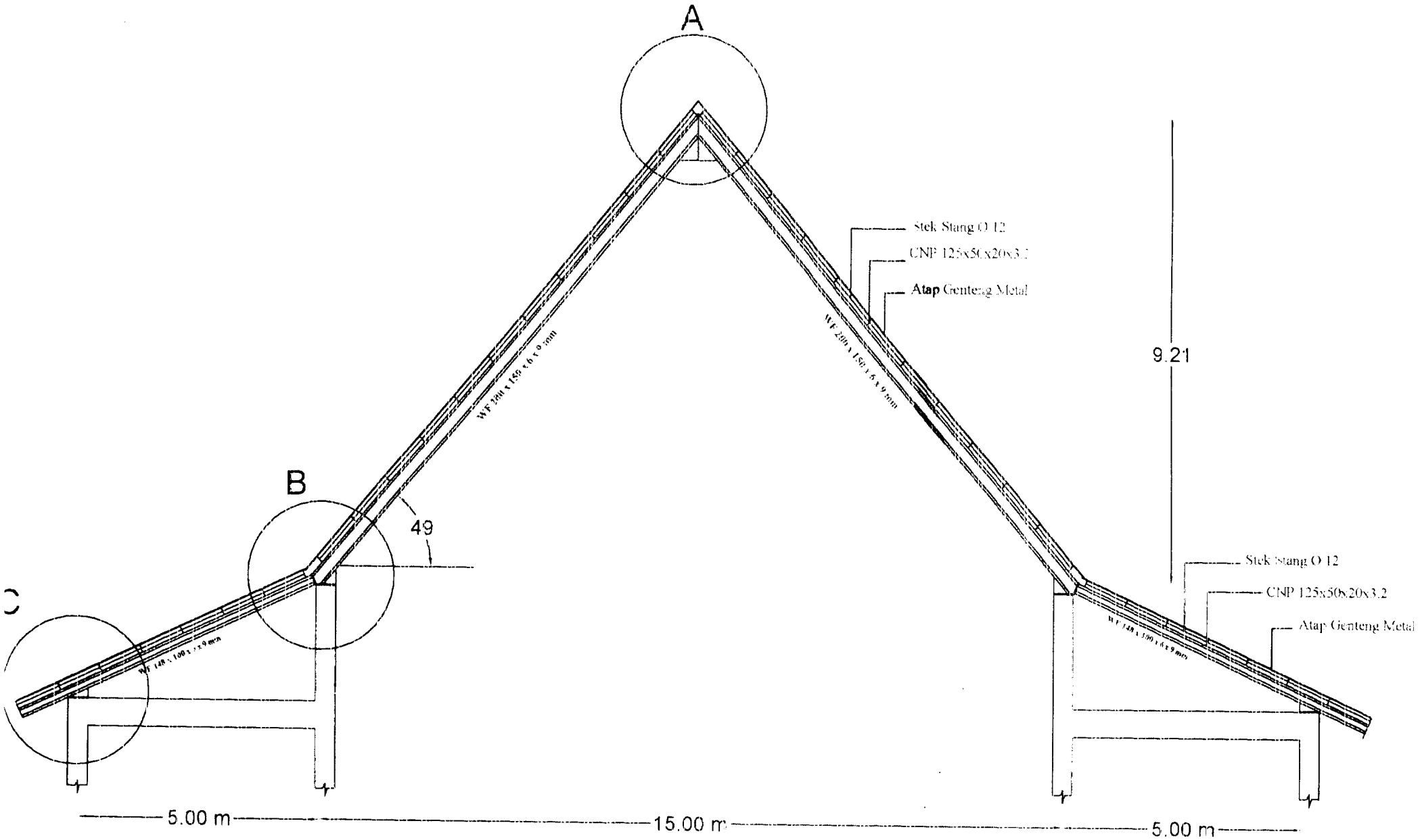

RENCANA KUDA - KUDA UTAMA

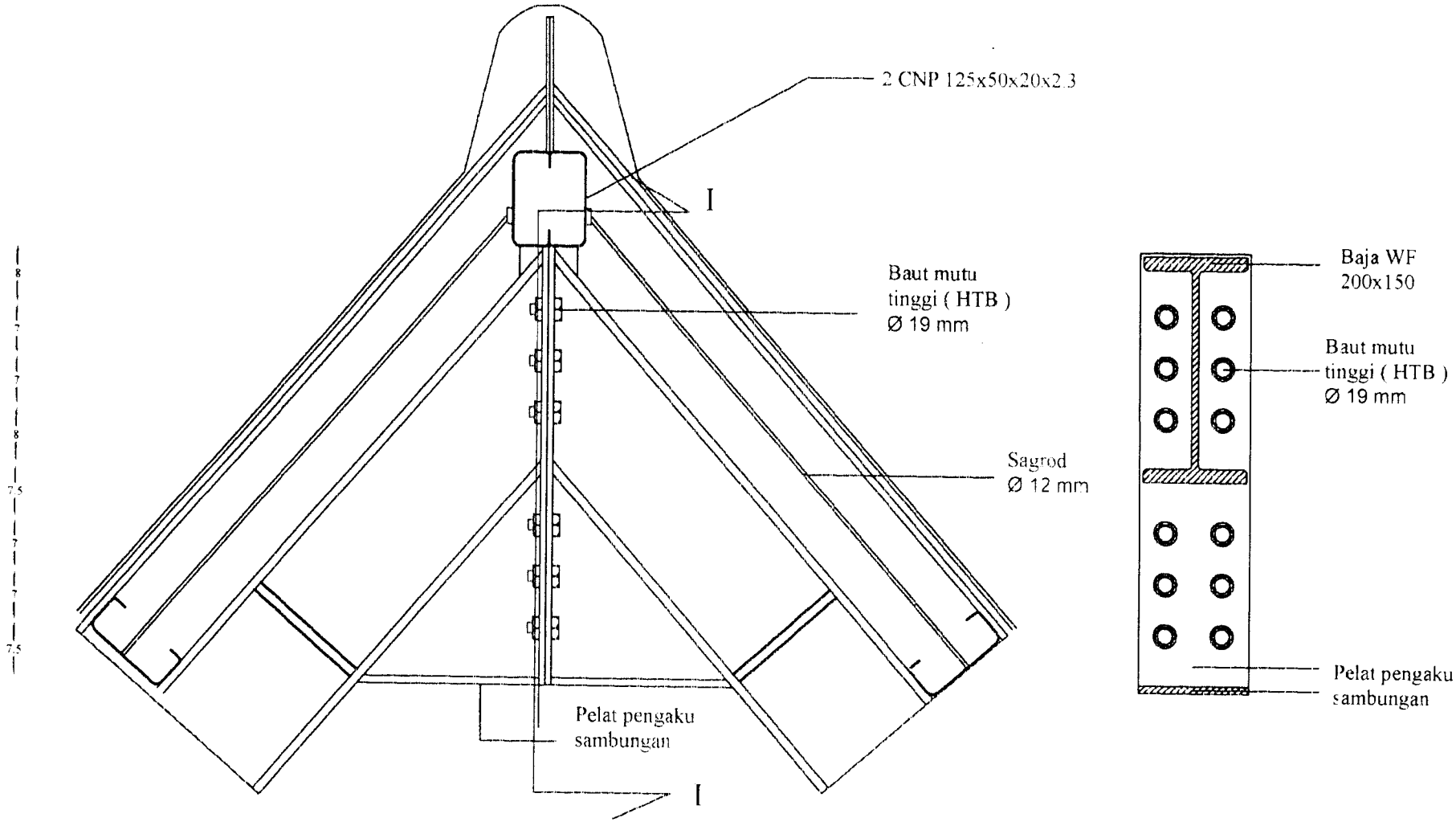

DETAIL A
SAMBUNGAN PUNCAK KUDA - KUDA

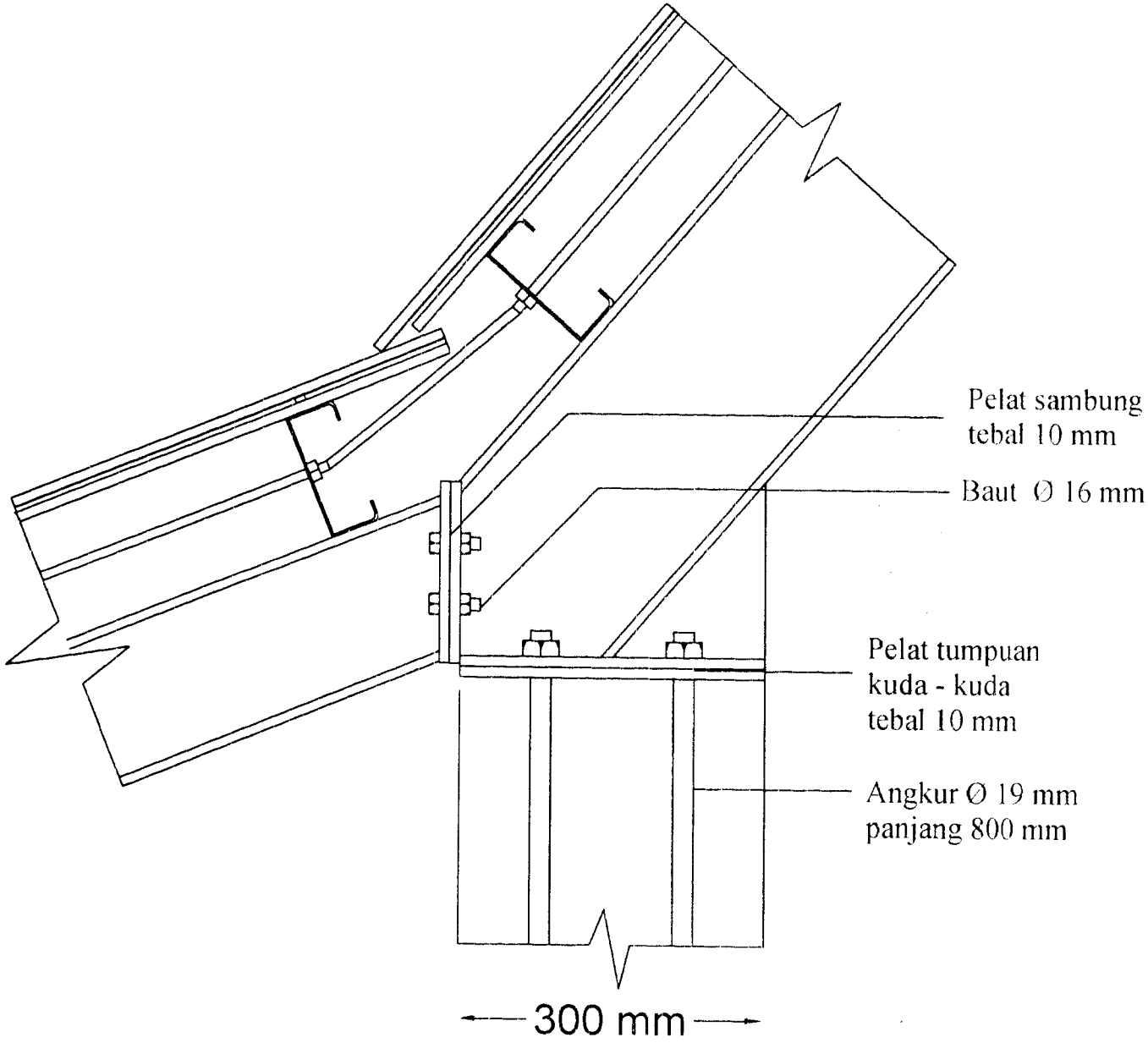

DETAIL B

TUMPUAN KUDA - KUDA

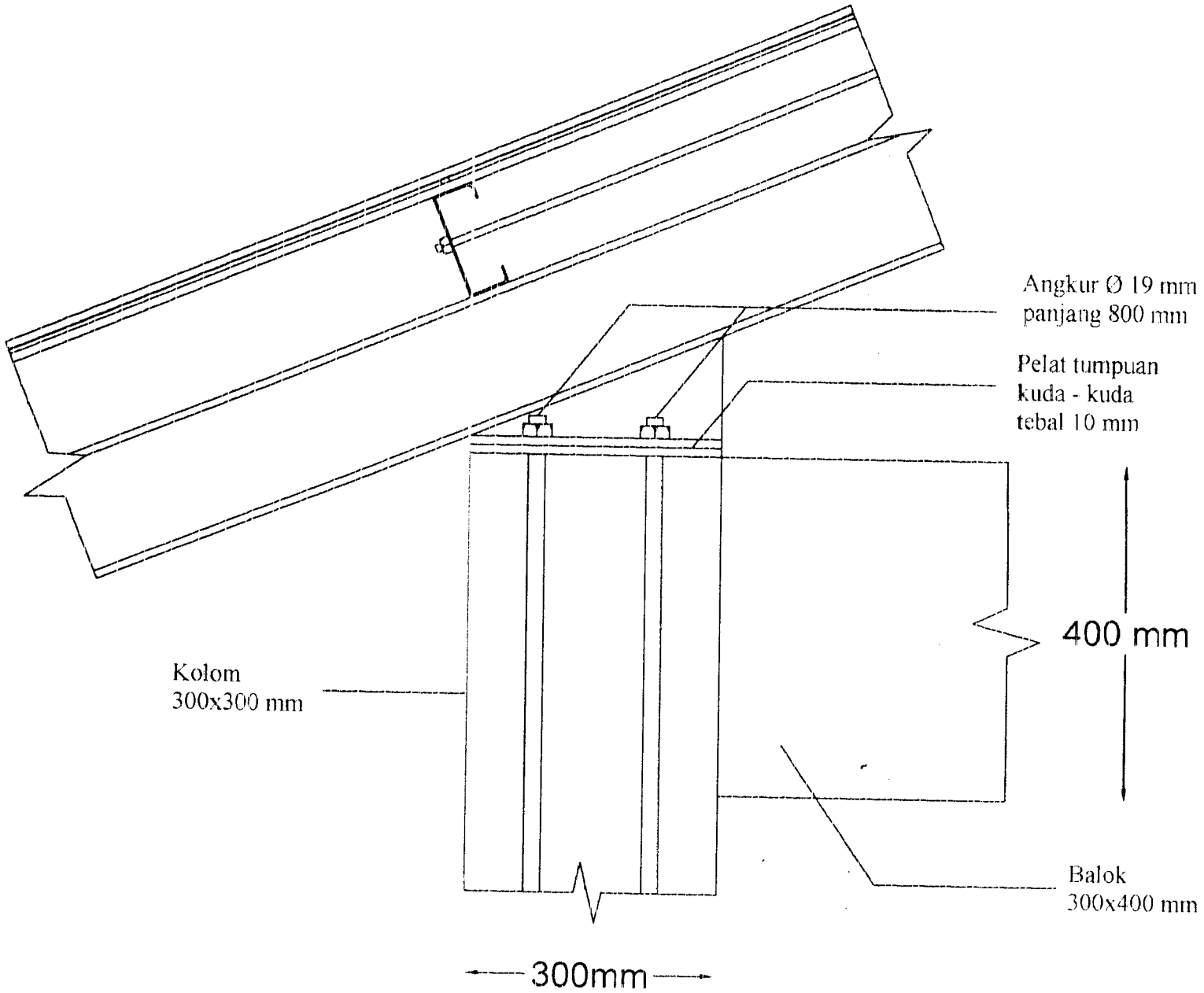

DETAIL C

TUMPUAN KUDA - KUDA

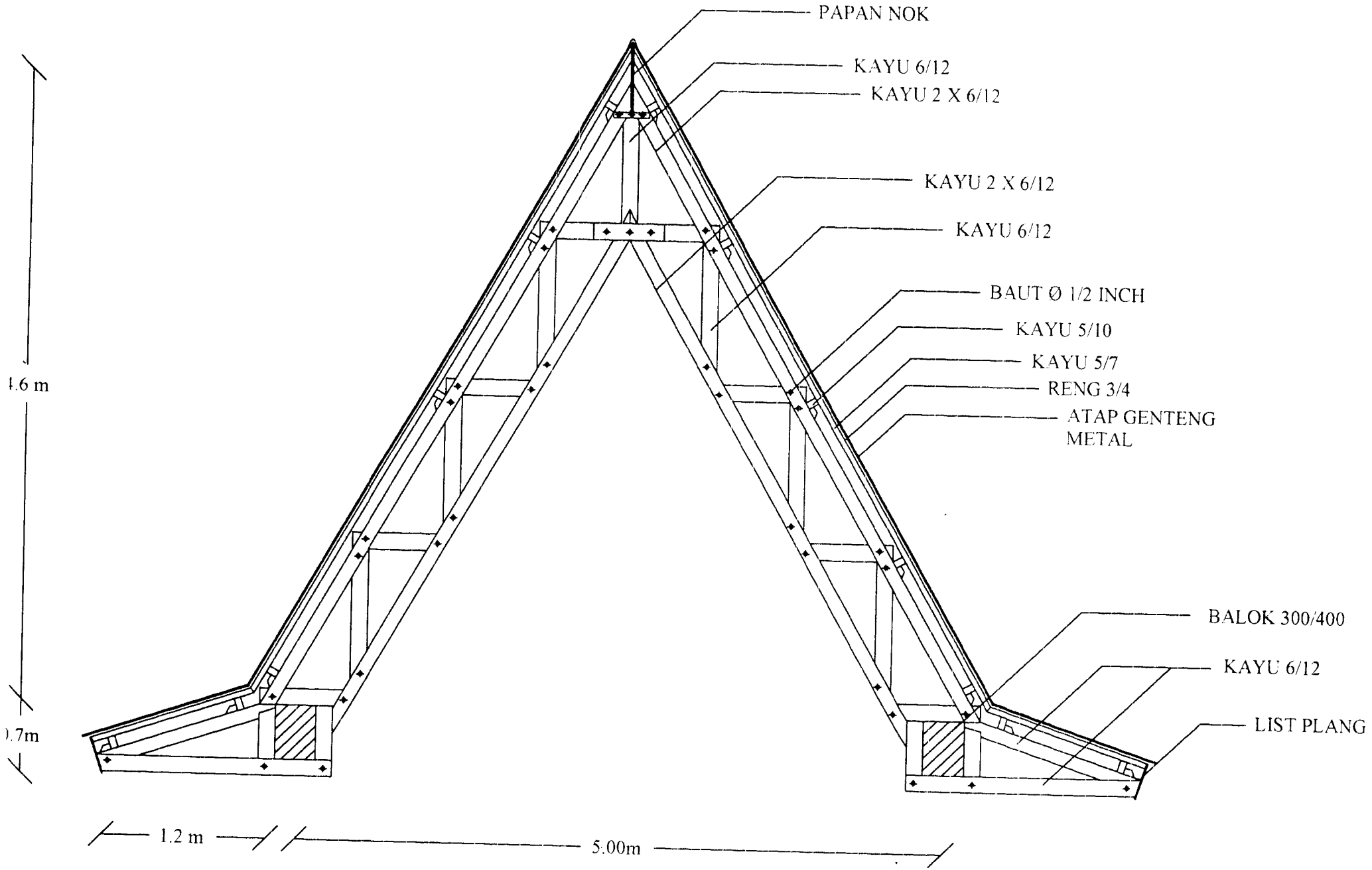
PAPAN NOK
KAYU 6/12
KAYU 2 X 6/12
KAYU 2 X 6/12
KAYU 6/12
BAUT Ø 1/2 INCH
KAYU 5/10
KAYU 5/7
RENG 3/4
ATAP GENTENG METAL
BALOK 300/400
KAYU 6/12
LIST PLANG
4.6 m
0.7m
1.2 m
5.00m

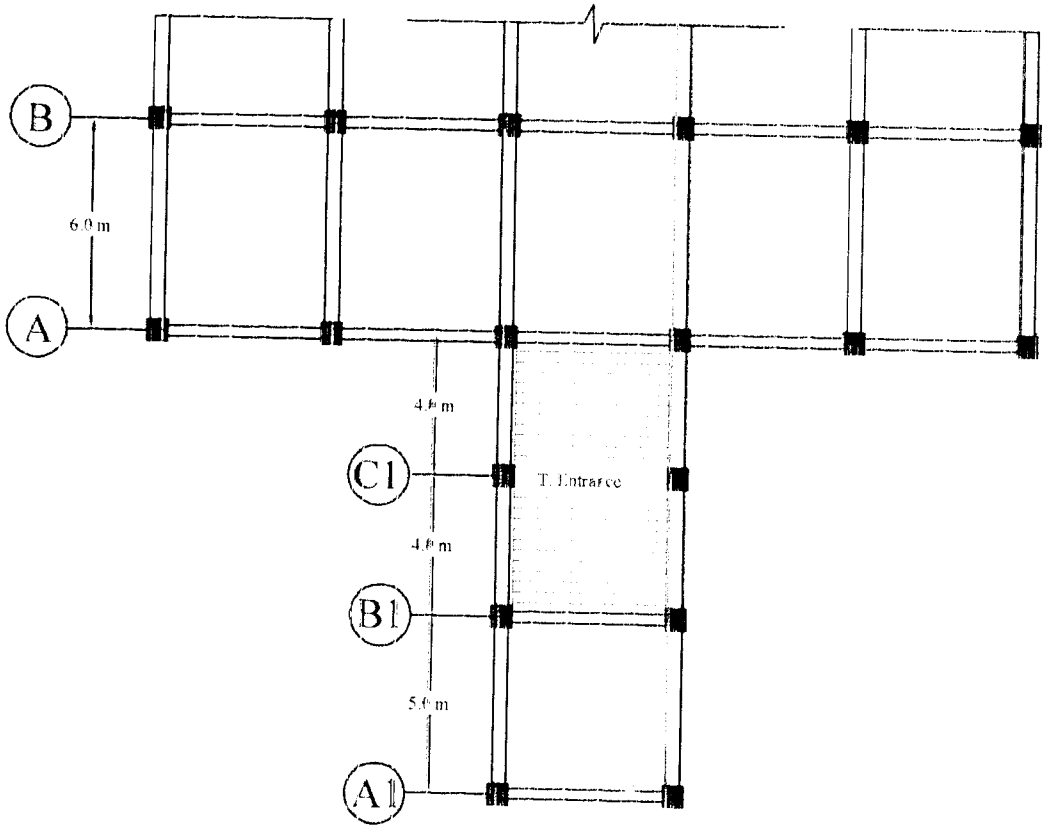

UNIVERSITAS ISLAM INDONESIA

TUGAS AKHIR
REDISAIN PROYEK
PEMBANGUNAN
PASAR RAKYAT
TELUK KUANTAN
TAHAP - 2

JUDUL GAMBAR :
DENAH PERLETAKAN
TANGGA ENTRANCE

DIGAMBAR OLEH :
FAJAR WIRIADI
98 511 133

DIPERIKSA OLEH :

IR. ILMAN NOOR, MSCE

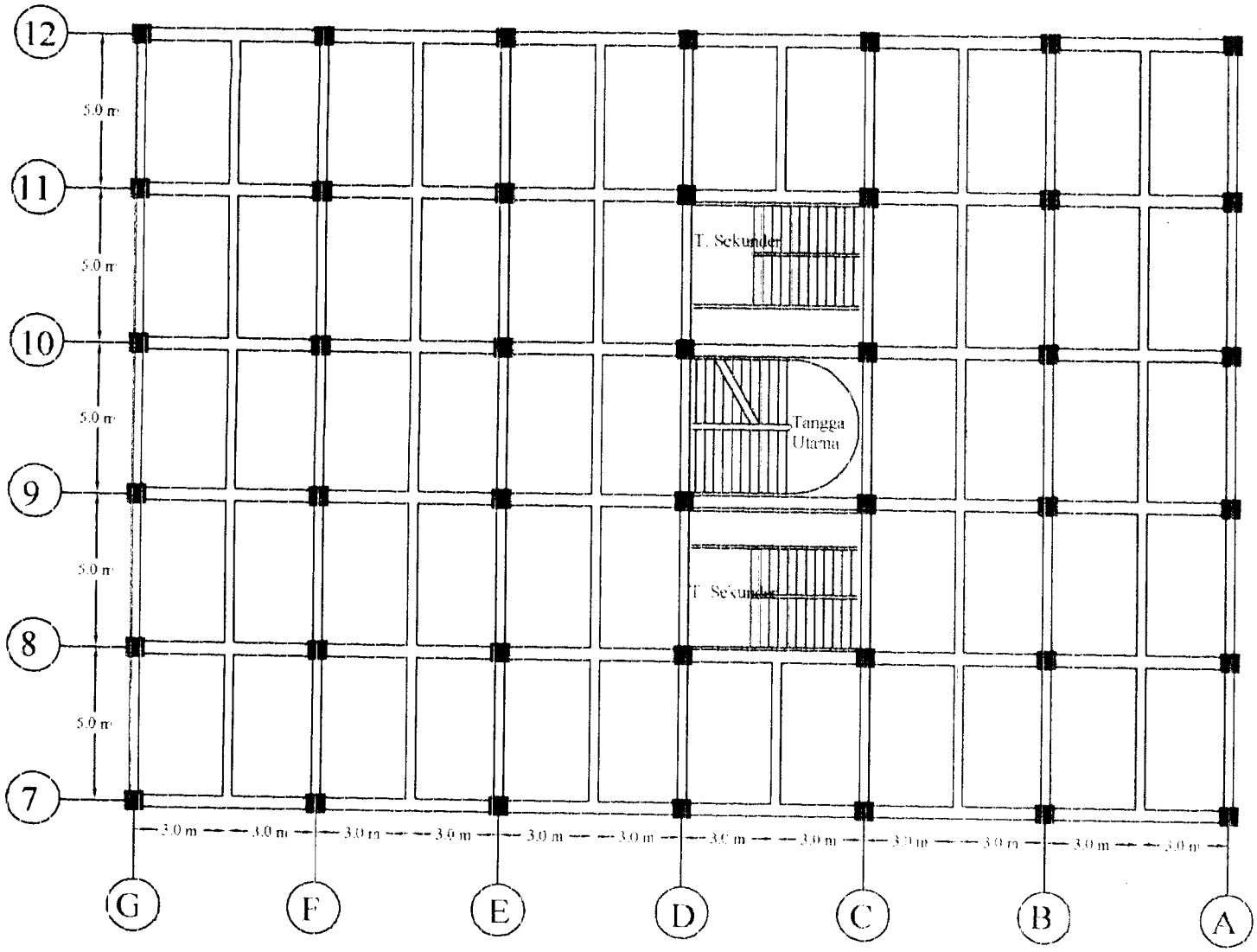

UNIVERSITAS ISLAM INDONESIA

TUGAS AKHIR
REDISAIN PROYEK
PEMBANGUNAN
PASAR RAKYAT
TELUK KUANTAN
TAHAP - 2

JUDUL GAMBAR :
DENAH PERLETAKAN
TANGGA LT. I

DIGAMBAR OLEH :
FAJAR WIRIADI
98 511 133

DIPERIKSA OLEH :

IR. ILMAN NOOR, MSCE

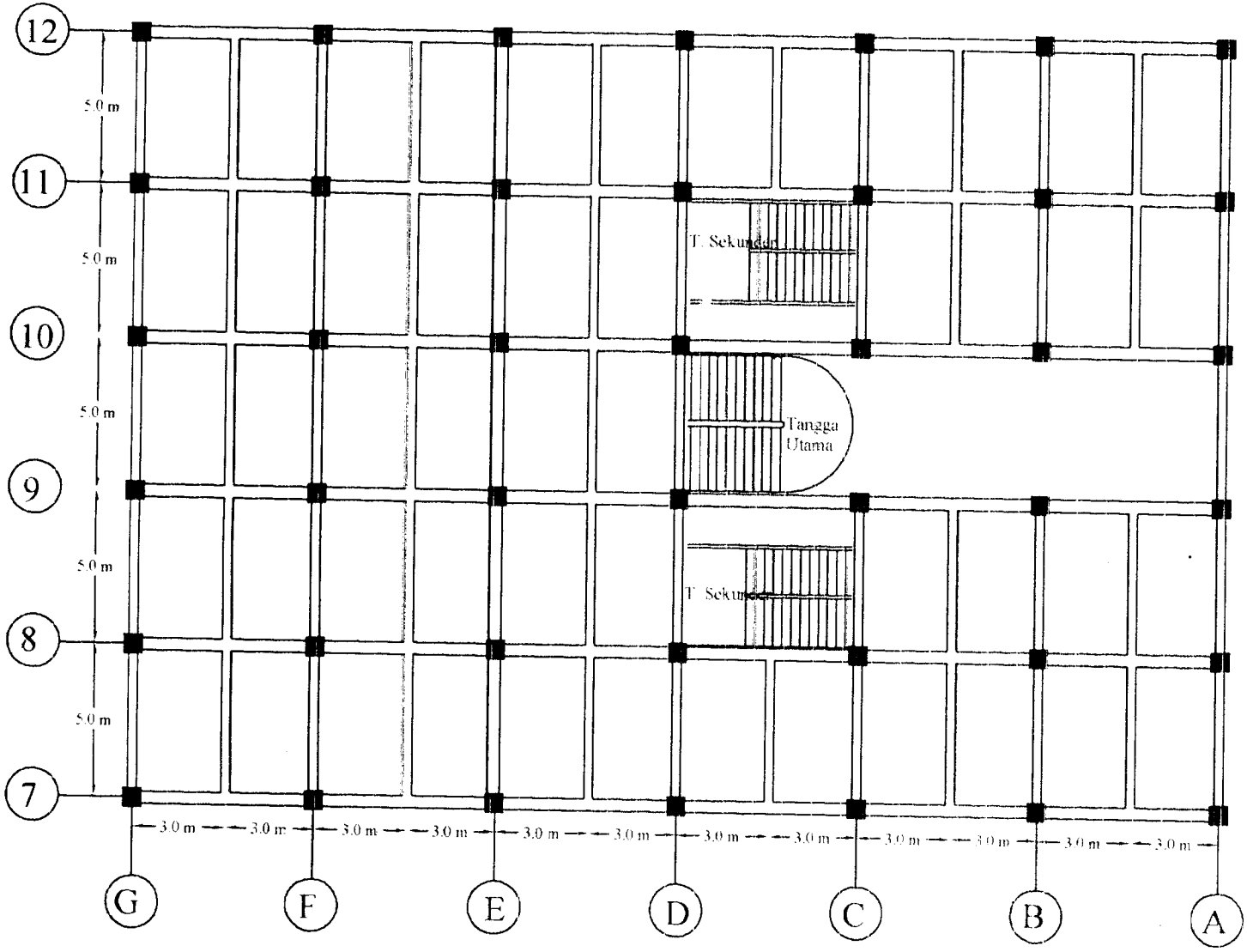

UNIVERSITAS ISLAM INDONESIA

TUGAS AKHIR
REDISAIN PROYEK
PEMBANGUNAN
PASAR RAKYAT
TELUK KUANTAN
TAHAP - 2

JUDUL GAMBAR :
DENAH PERLETAKAN
TANGGA LT.II

DIGAMBAR OLEH :
FAJAR WIRIADI
98 511 133

DIPERIKSA OLEH :

IR. ILMAN NOOR, MSCE

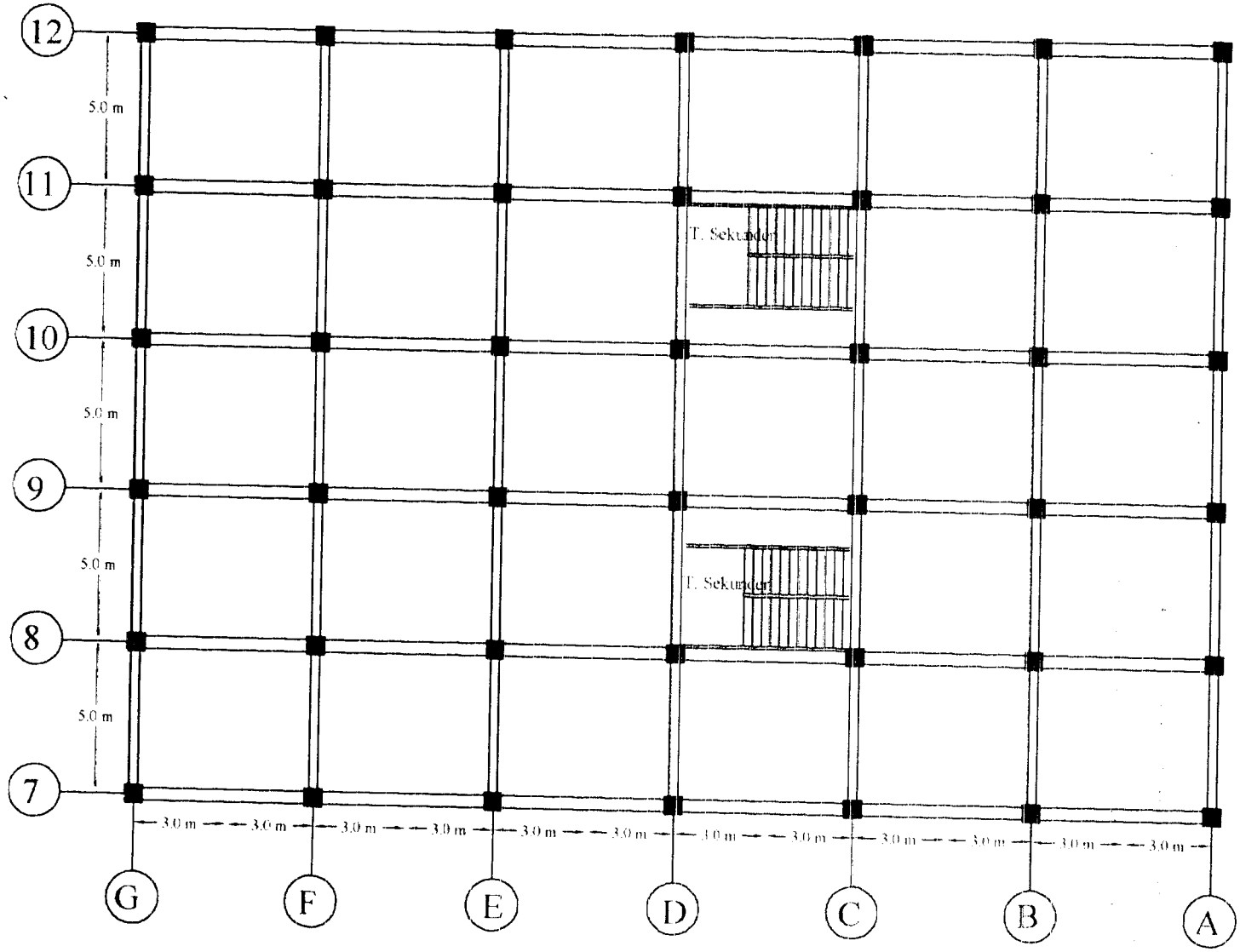

UNIVERSITAS ISLAM INDONESIA

TUGAS AKHIR
REDISAIN PROYEK
PEMBANGUNAN
PASAR RAKYAT
TELUK KUANTAN
TAHAP - 2

JUDUL GAMBAR :
DENAHPERLETAKAN
TANGGA LT. DASAR

DIGAMBAR OLEH :
FAJAR WIRIADI
98 511 133

DIPERIKSA OLEH :

IR. ILMAN NOOR, MSCE

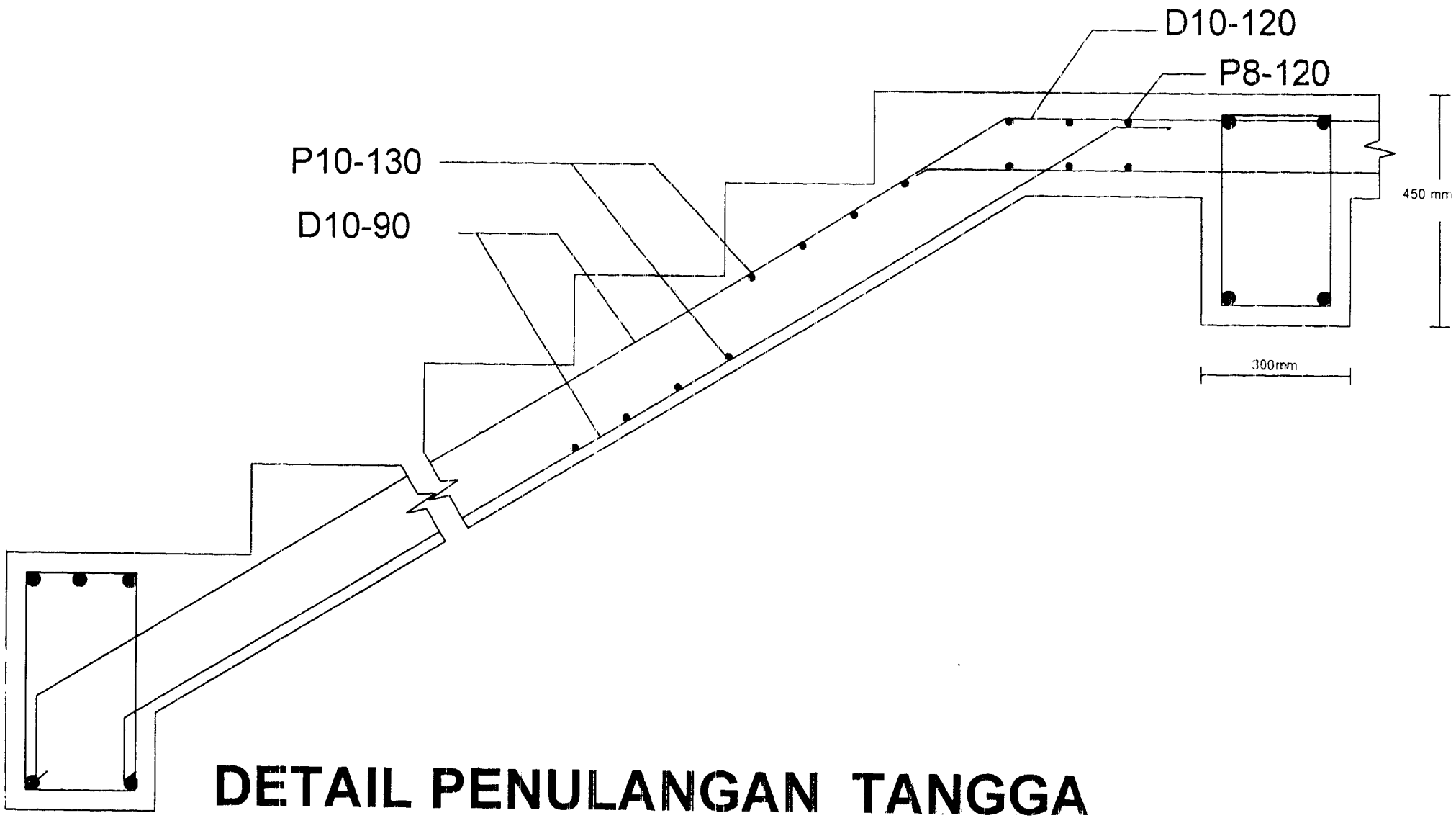

DETAIL PENULANGAN TANGGA ENTRANCE

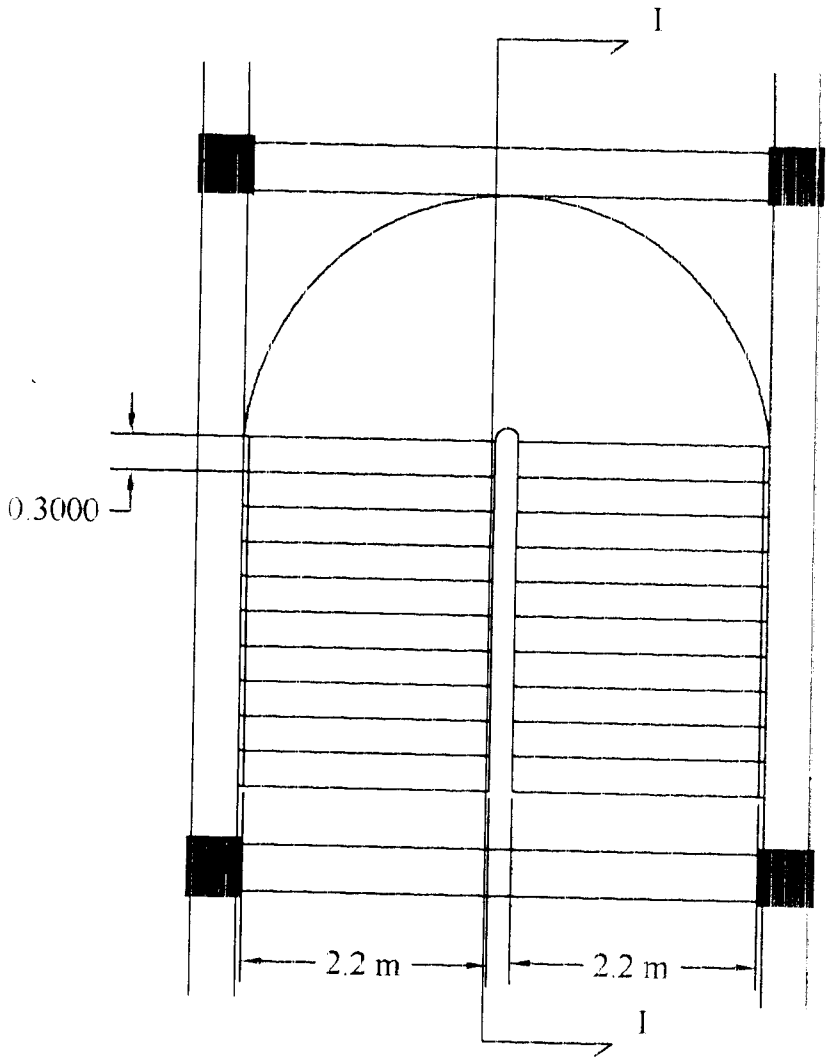

TAMPAK ATAS
TANGGA UTAMA

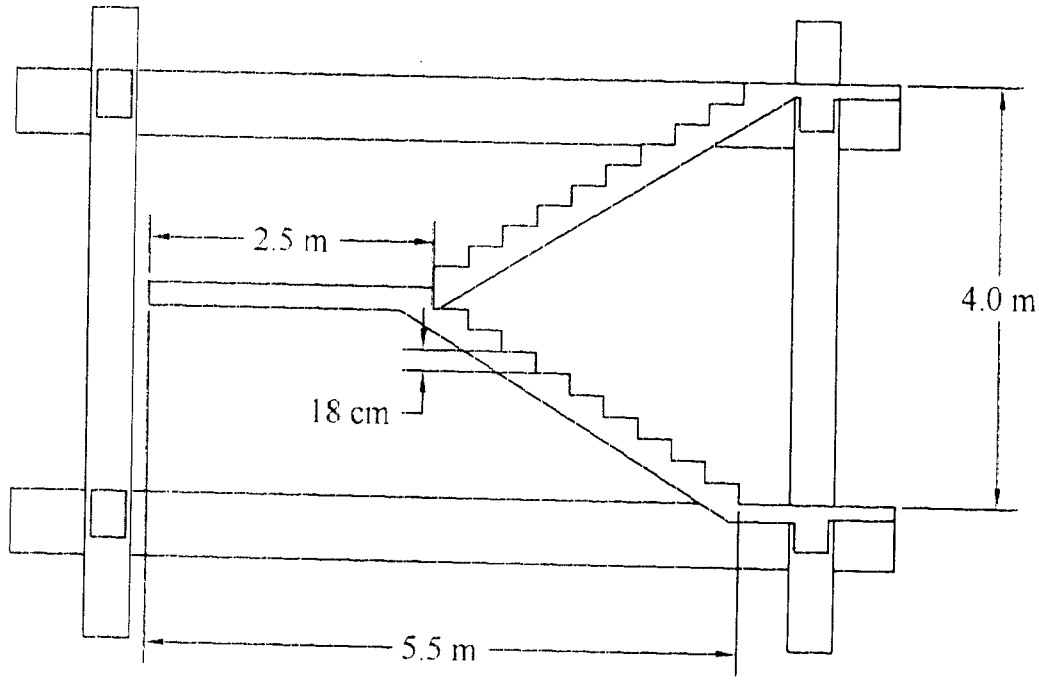

POTONGAN I-I

SAP2000

3/1/04 13:55:09

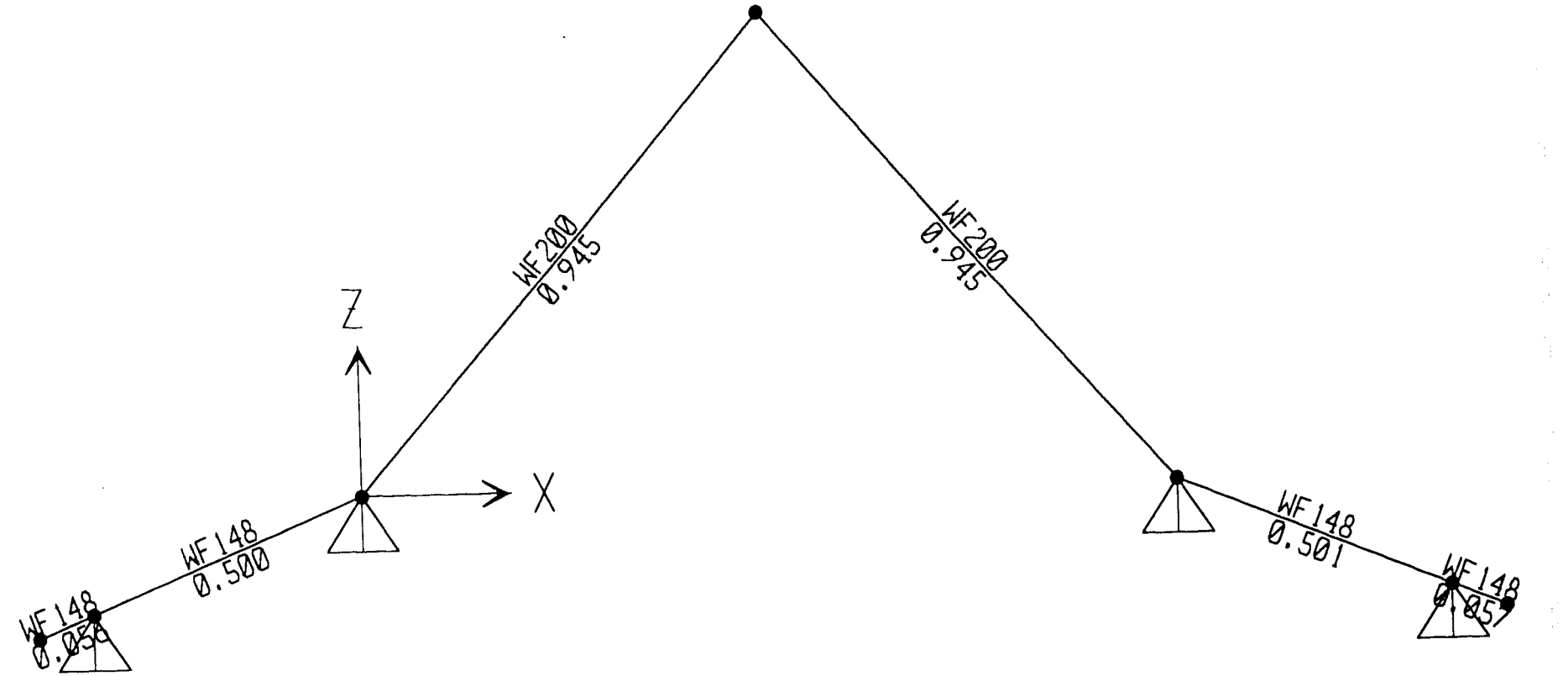

0.00 0.50 0.70 0.90 1.00

Steel P-M Interaction Ratios (AISC LRFD93) - KN-m Units

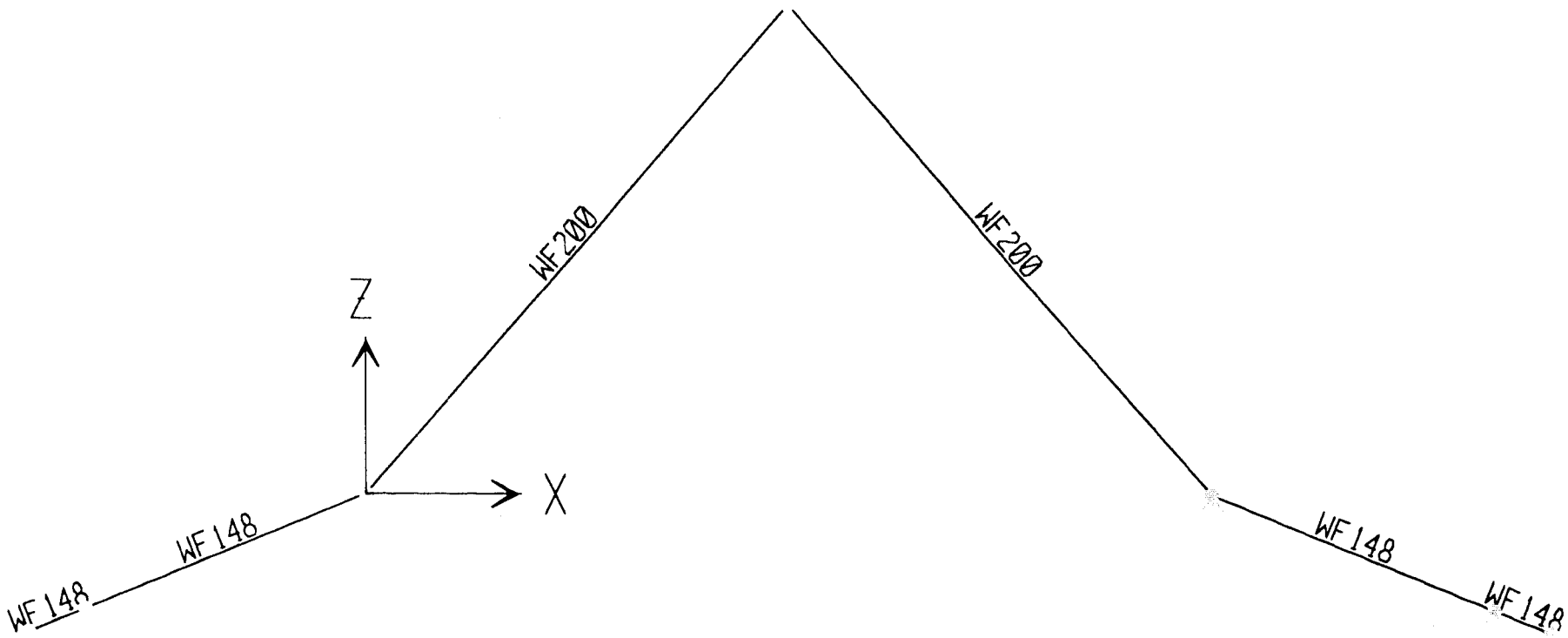
WF200
WF200
Z
X
WF148
WF148
WF148
WF148

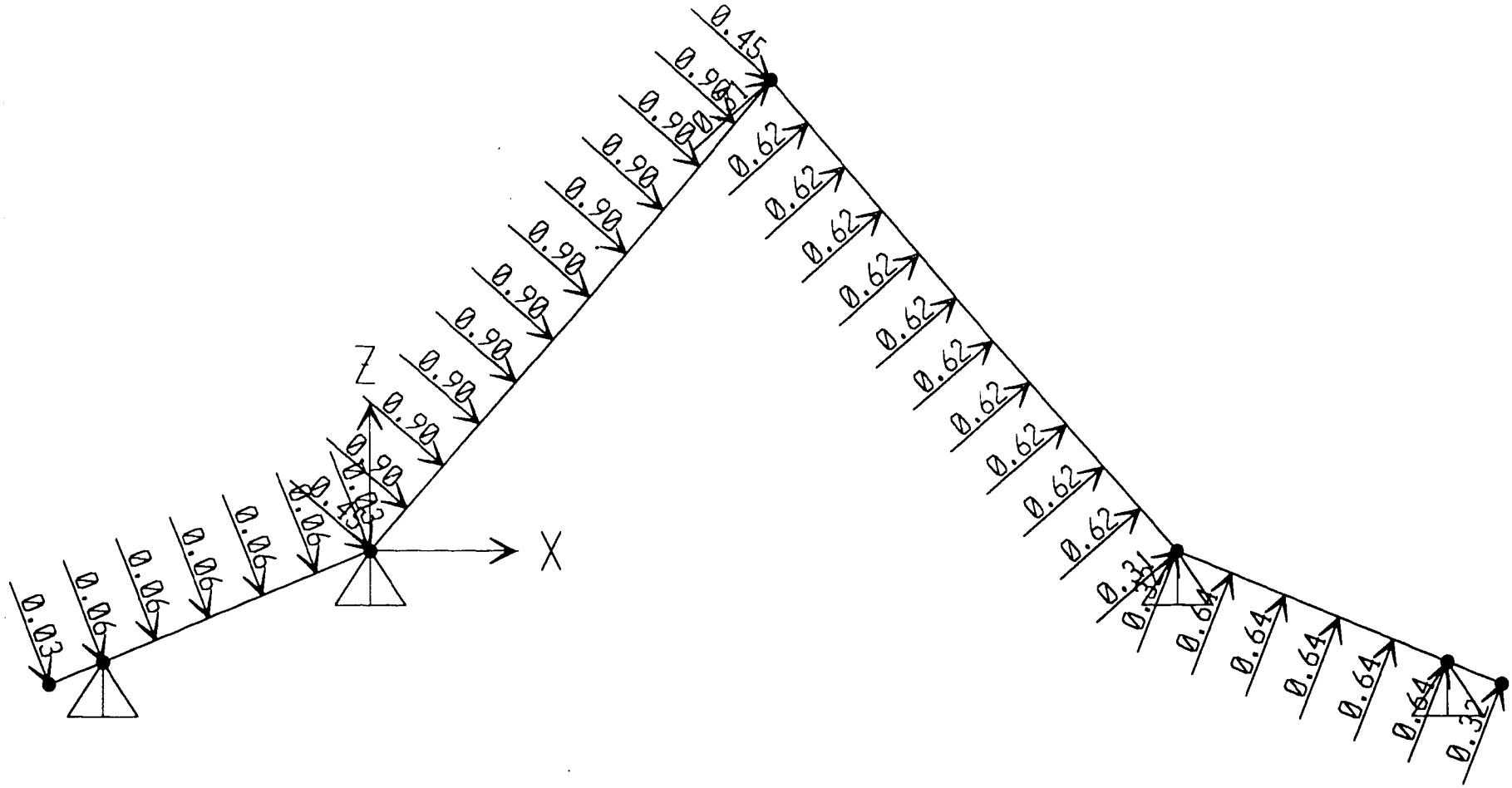
Z
X
0.03
0.06
0.06
0.06
0.06
0.06
0.45
0.90
0.90
0.90
0.90
0.90
0.90
0.90
0.90
0.90
0.45
0.62
0.62
0.62
0.62
0.62
0.62
0.62
0.62
0.62
0.62
0.31
0.64
0.64
0.64
0.64
0.64
0.32

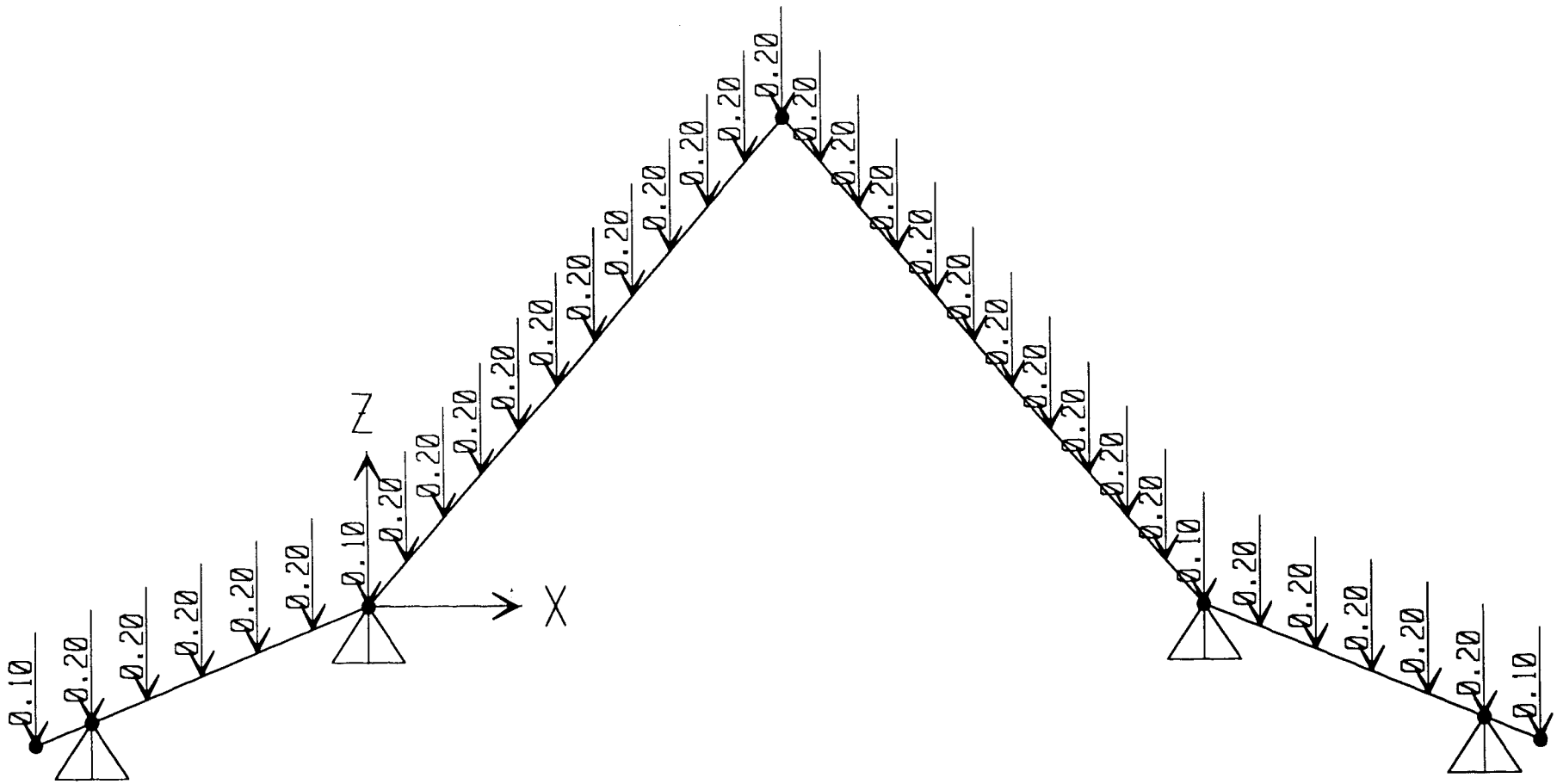
Z
X
0.10
0.20
0.20
0.20
0.20
0.20
0.10
0.20
0.20
0.20
0.20
0.20
0.20
0.20
0.20
0.20
0.20
0.20
0.20
0.20
0.20
0.20
0.20
0.20
0.20
0.20
0.20
0.20
0.20
0.20
0.10
0.20
0.20
0.20
0.20
0.20
0.10

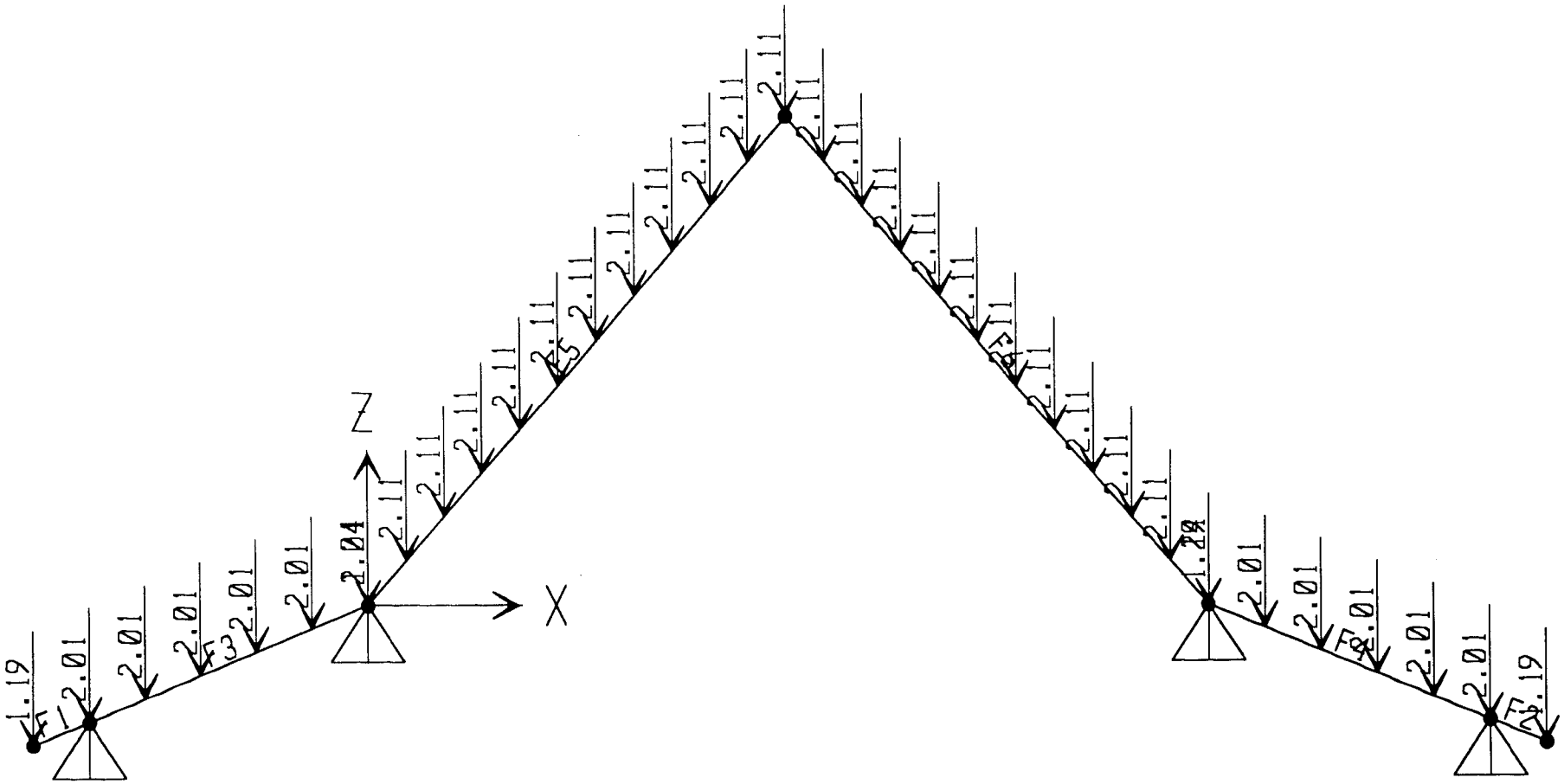
Z
X
1.19
2.01
2.01
2.01
2.01
2.01
2.04
2.11
2.11
2.11
2.11
2.11
2.11
2.11
2.11
2.11
2.11
2.11
2.11
2.11
2.11
2.11
2.11
2.11
2.11
2.11
2.11
2.11
2.11
2.11
2.11
2.11
2.11
2.11
2.11
2.01
2.01
2.01
2.01
2.01
1.19

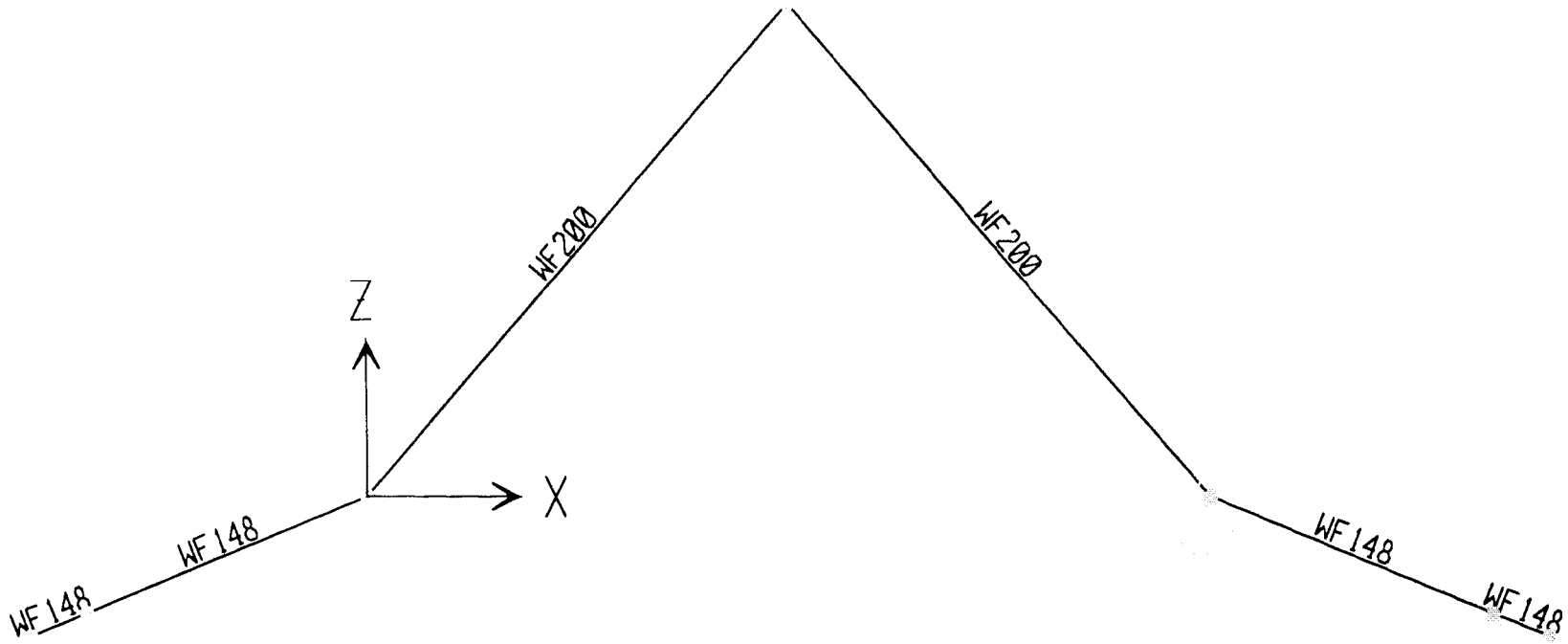
WF200
WF200
Z
X
WF148
WF148
WF148
WF148

F5	FORCE	GLOBAL-Z	0.0000	-1.2400
F5	FORCE	GLOBAL-Z	0.0910	-2.1100
F5	FORCE	GLOBAL-Z	0.1820	-2.1100
F5	FORCE	GLOBAL-Z	0.2729	-2.1100
F6	FORCE	GLOBAL-Z	0.0000	-2.1100
F6	FORCE	GLOBAL-Z	0.0910	-2.1100
F6	FORCE	GLOBAL-Z	0.1820	-2.1100
F6	FORCE	GLOBAL-Z	0.2729	-2.1100
F5	FORCE	GLOBAL-Z	0.3639	-2.1100
F5	FORCE	GLOBAL-Z	0.4549	-2.1100
F5	FORCE	GLOBAL-Z	0.5459	-2.1100
F5	FORCE	GLOBAL-Z	0.6368	-2.1100
F6	FORCE	GLOBAL-Z	0.3639	-2.1100
F6	FORCE	GLOBAL-Z	0.4549	-2.1100
F6	FORCE	GLOBAL-Z	0.5459	-2.1100
F6	FORCE	GLOBAL-Z	0.6368	-2.1100
F5	FORCE	GLOBAL-Z	0.7278	-2.1100
F5	FORCE	GLOBAL-Z	0.8188	-2.1100
F5	FORCE	GLOBAL-Z	0.9098	-2.1100
F6	FORCE	GLOBAL-Z	0.7278	-2.1100
F6	FORCE	GLOBAL-Z	0.8188	-2.1100
F6	FORCE	GLOBAL-Z	0.9098	-2.1100
F6	FORCE	GLOBAL-Z	1.0000	-1.2400
F3	FORCE	GLOBAL-Z	0.0000	-2.0100
F3	FORCE	GLOBAL-Z	0.4005	-2.0100
F3	FORCE	GLOBAL-Z	0.6008	-2.0100
F3	FORCE	GLOBAL-Z	0.8011	-2.0100
F3	FORCE	GLOBAL-Z	0.2003	-2.0100
F1	FORCE	GLOBAL-Z	0.0000	-2.0100
F1	FORCE	GLOBAL-Z	1.0000	-1.1900
F4	FORCE	GLOBAL-Z	0.0000	-1.1900
F4	FORCE	GLOBAL-Z	0.2003	-2.0100
F4	FORCE	GLOBAL-Z	0.4005	-2.0100
F4	FORCE	GLOBAL-Z	0.6008	-2.0100
F4	FORCE	GLOBAL-Z	0.8011	-2.0100
F2	FORCE	GLOBAL-Z	0.0000	-2.0100
F2	FORCE	GLOBAL-Z	1.0000	-1.1900

F R A M E S P A N P O I N T L O A D S Load Case W

FRAME	TYPE	DIRECTION	DISTANCE	VALUE
F3	FORCE	LOCAL-2	0.0000	-0.0320
F3	FORCE	LOCAL-2	0.2003	-0.0640
F3	FORCE	LOCAL-2	0.4005	-0.0640
F3	FORCE	LOCAL-2	0.6008	-0.0640
F3	FORCE	LOCAL-2	0.8011	-0.0640
F1	FORCE	LOCAL-2	0.0000	-0.0640
F1	FORCE	LOCAL-2	1.0000	-0.0320
F4	FORCE	LOCAL-2	0.0000	0.3200
F4	FORCE	LOCAL-2	0.2003	0.6400
F4	FORCE	LOCAL-2	0.4005	0.6400
F4	FORCE	LOCAL-2	0.6008	0.6400

F4	FORCE	LOCAL-2	0.8011	0.6400
F2	FORCE	LOCAL-2	0.0000	0.6400
F2	FORCE	LOCAL-2	1.0000	0.3200
F5	FORCE	LOCAL-2	0.0000	-0.4500
F5	FORCE	LOCAL-2	0.0910	-0.9000
F5	FORCE	LOCAL-2	0.1820	-0.9000
F5	FORCE	LOCAL-2	0.2729	-0.9000
F5	FORCE	LOCAL-2	0.3639	-0.9000
F5	FORCE	LOCAL-2	0.4549	-0.9000
F5	FORCE	LOCAL-2	0.5459	-0.9000
F5	FORCE	LOCAL-2	0.6368	-0.9000
F5	FORCE	LOCAL-2	0.7278	-0.9000
F5	FORCE	LOCAL-2	0.8188	-0.9000
F5	FORCE	LOCAL-2	0.9098	-0.9000
F5	FORCE	LOCAL-2	1.0000	-0.4500
F6	FORCE	LOCAL-2	0.0000	0.3100
F6	FORCE	LOCAL-2	0.0910	0.6200
F6	FORCE	LOCAL-2	0.1820	0.6200
F6	FORCE	LOCAL-2	0.2729	0.6200
F6	FORCE	LOCAL-2	0.3639	0.6200
F6	FORCE	LOCAL-2	0.4549	0.6200
F6	FORCE	LOCAL-2	0.5459	0.6200
F6	FORCE	LOCAL-2	0.6368	0.6200
F6	FORCE	LOCAL-2	0.7278	0.6200
F6	FORCE	LOCAL-2	0.8188	0.6200
F6	FORCE	LOCAL-2	0.9098	0.6200
F6	FORCE	LOCAL-2	1.0000	0.3100

Microsoft

F R A M E S P A N P O I N T L O A D S Load Case L

FRAME	TYPE	DIRECTION	DISTANCE	VALUE
F5	FORCE	GLOBAL-Z	0.7278	-0.2000
F5	FORCE	GLOBAL-Z	0.8188	-0.2000
F5	FORCE	GLOBAL-Z	0.9098	-0.2000
F5	FORCE	GLOBAL-Z	1.0000	-0.2000
F6	FORCE	GLOBAL-Z	0.7278	-0.2000
F6	FORCE	GLOBAL-Z	0.8188	-0.2000
F6	FORCE	GLOBAL-Z	0.9098	-0.2000
F6	FORCE	GLOBAL-Z	1.0000	-0.1000
F5	FORCE	GLOBAL-Z	0.3639	-0.2000
F5	FORCE	GLOBAL-Z	0.4549	-0.2000
F5	FORCE	GLOBAL-Z	0.5459	-0.2000
F5	FORCE	GLOBAL-Z	0.6368	-0.2000
F6	FORCE	GLOBAL-Z	0.3639	-0.2000
F6	FORCE	GLOBAL-Z	0.4549	-0.2000
F6	FORCE	GLOBAL-Z	0.5459	-0.2000
F6	FORCE	GLOBAL-Z	0.6368	-0.2000
F5	FORCE	GLOBAL-Z	0.0000	-0.1000
F5	FORCE	GLOBAL-Z	0.0910	-0.2000
F5	FORCE	GLOBAL-Z	0.1820	-0.2000
F5	FORCE	GLOBAL-Z	0.2729	-0.2000
F6	FORCE	GLOBAL-Z	0.0910	-0.2000
F6	FORCE	GLOBAL-Z	0.1820	-0.2000

F6	FORCE	GLOBAL-Z	0.2729	-0.2000
F4	FORCE	GLOBAL-Z	0.0000	-0.1000
F4	FORCE	GLOBAL-Z	0.2003	-0.2000
F4	FORCE	GLOBAL-Z	0.4005	-0.2000
F4	FORCE	GLOBAL-Z	0.6008	-0.2000
F3	FORCE	GLOBAL-Z	0.0000	-0.1000
F3	FORCE	GLOBAL-Z	0.2003	-0.2000
F3	FORCE	GLOBAL-Z	0.4005	-0.2000
F3	FORCE	GLOBAL-Z	0.6008	-0.2000
F4	FORCE	GLOBAL-Z	0.8011	-0.2000
F3	FORCE	GLOBAL-Z	0.8011	-0.2000
F2	FORCE	GLOBAL-Z	0.0000	-0.2000
F2	FORCE	GLOBAL-Z	1.0000	-0.1000
F1	FORCE	GLOBAL-Z	0.0000	-0.2000
F1	FORCE	GLOBAL-Z	1.0000	-0.1000

LOAD COMBINATION MULTIPLIERS

COMBO	TYPE	CASE	FACTOR	TYPE	TITLE
COMB1	ADD				COMB1
	D		1.4000	STATIC(DEAD)	
COMB2	ADD				COMB2
	D		1.2000	STATIC(DEAD)	
	L		1.6000	STATIC(LIVE)	
COMB3	ADD				COMB3
	D		1.2000	STATIC(DEAD)	
	L		0.5000	STATIC(LIVE)	
	W		0.8000	STATIC(WIND)	
COMB4	ADD				COMB4
	D		1.2000	STATIC(DEAD)	
	L		0.5000	STATIC(LIVE)	
	W		-0.8000	STATIC(WIND)	

JOINT DISPLACEMENTS

JOINT	LOAD	U1	U2	U3	R1	R2	R3
J1	D	-9.045E-05	0.0000	2.234E-04	0.0000	1.276E-04	0.0000
J1	W	9.693E-04	0.0000	-2.423E-03	0.0000	-2.426E-03	0.0000
J1	L	-2.156E-05	0.0000	5.369E-05	0.0000	4.592E-05	0.0000
J1	COMB1	-1.266E-04	0.0000	3.128E-04	0.0000	1.786E-04	0.0000
J1	COMB2	-1.430E-04	0.0000	3.540E-04	0.0000	2.266E-04	0.0000
J1	COMB3	6.561E-04	0.0000	-1.644E-03	0.0000	-1.765E-03	0.0000
J1	COMB4	-8.947E-04	0.0000	2.233E-03	0.0000	2.117E-03	0.0000
J2	D	9.022E-05	0.0000	2.228E-04	0.0000	-1.270E-04	0.0000
J2	W	4.315E-04	0.0000	1.079E-03	0.0000	-1.106E-03	0.0000
J2	L	2.154E-05	0.0000	5.364E-05	0.0000	-4.587E-05	0.0000
J2	COMB1	1.263E-04	0.0000	3.120E-04	0.0000	-1.778E-04	0.0000
J2	COMB2	1.427E-04	0.0000	3.532E-04	0.0000	-2.258E-04	0.0000
J2	COMB3	4.642E-04	0.0000	1.157E-03	0.0000	-1.060E-03	0.0000
J2	COMB4	-2.261E-04	0.0000	-5.687E-04	0.0000	7.091E-04	0.0000
J3	D	0.0000	0.0000	0.0000	0.0000	4.741E-04	0.0000
J3	W	0.0000	0.0000	0.0000	0.0000	-2.416E-03	0.0000
J3	L	0.0000	0.0000	0.0000	0.0000	7.340E-05	0.0000
J3	COMB1	0.0000	0.0000	0.0000	0.0000	6.637E-04	0.0000

J3 COMB2	0.0000	0.0000	0.0000	0.0000	6.863E-04	0.0000
J3 COMB3	0.0000	0.0000	0.0000	0.0000	-1.328E-03	0.0000
J3 COMB4	0.0000	0.0000	0.0000	0.0000	2.539E-03	0.0000
J4 D	0.0000	0.0000	0.0000	0.0000	-4.735E-04	0.0000
J4 W	0.0000	0.0000	0.0000	0.0000	-1.011E-03	0.0000
J4 L	0.0000	0.0000	0.0000	0.0000	-7.335E-05	0.0000
J4 COMB1	0.0000	0.0000	0.0000	0.0000	-6.629E-04	0.0000
J4 COMB2	0.0000	0.0000	0.0000	0.0000	-6.855E-04	0.0000
J4 COMB3	0.0000	0.0000	0.0000	0.0000	-1.414E-03	0.0000
J4 COMB4	0.0000	0.0000	0.0000	0.0000	2.038E-04	0.0000
J5 D	0.0000	0.0000	0.0000	0.0000	3.480E-03	0.0000
J5 W	0.0000	0.0000	0.0000	0.0000	5.021E-03	0.0000
J5 L	0.0000	0.0000	0.0000	0.0000	2.720E-04	0.0000
J5 COMB1	0.0000	0.0000	0.0000	0.0000	4.872E-03	0.0000
J5 COMB2	0.0000	0.0000	0.0000	0.0000	4.611E-03	0.0000
J5 COMB3	0.0000	0.0000	0.0000	0.0000	8.329E-03	0.0000
J5 COMB4	0.0000	0.0000	0.0000	0.0000	2.954E-04	0.0000
J6 D	0.0000	0.0000	0.0000	0.0000	-3.481E-03	0.0000
J6 W	0.0000	0.0000	0.0000	0.0000	3.490E-03	0.0000
J6 L	0.0000	0.0000	0.0000	0.0000	-2.721E-04	0.0000
J6 COMB1	0.0000	0.0000	0.0000	0.0000	-4.874E-03	0.0000
J6 COMB2	0.0000	0.0000	0.0000	0.0000	-4.613E-03	0.0000
J6 COMB3	0.0000	0.0000	0.0000	0.0000	-1.521E-03	0.0000
J6 COMB4	0.0000	0.0000	0.0000	0.0000	-7.106E-03	0.0000
J7 D	0.0000	0.0000	-3.665E-04	0.0000	-1.108E-06	0.0000
J7 W	9.742E-05	0.0000	-1.678E-05	0.0000	-6.207E-03	0.0000
J7 L	0.0000	0.0000	-3.030E-05	0.0000	0.0000	0.0000
J7 COMB1	0.0000	0.0000	-5.130E-04	0.0000	-1.551E-06	0.0000
J7 COMB2	0.0000	0.0000	-4.882E-04	0.0000	-1.519E-06	0.0000
J7 COMB3	7.794E-05	0.0000	-4.683E-04	0.0000	-4.967E-03	0.0000
J7 COMB4	-7.794E-05	0.0000	-4.415E-04	0.0000	4.964E-03	0.0000

JOINT REACTIONS

JOINT	LOAD	F1	F2	F3	M1	M2	M3
J3	D	0.5916	0.0000	6.5090	0.0000	0.0000	0.0000
J3	W	0.3063	0.0000	-0.7572	0.0000	0.0000	0.0000
J3	L	0.0517	0.0000	0.5727	0.0000	0.0000	0.0000
J3	COMB1	0.8283	0.0000	9.1127	0.0000	0.0000	0.0000
J3	COMB2	0.7926	0.0000	8.7271	0.0000	0.0000	0.0000
J3	COMB3	0.9808	0.0000	7.4914	0.0000	0.0000	0.0000
J3	COMB4	0.4908	0.0000	8.7029	0.0000	0.0000	0.0000
J4	D	-0.5917	0.0000	6.5088	0.0000	0.0000	0.0000
J4	W	-0.4656	0.0000	-1.1613	0.0000	0.0000	0.0000
J4	L	-0.0517	0.0000	0.5726	0.0000	0.0000	0.0000
J4	COMB1	-0.8284	0.0000	9.1124	0.0000	0.0000	0.0000
J4	COMB2	-0.7927	0.0000	8.7268	0.0000	0.0000	0.0000

J4	COMB3	-1.1084	0.0000	7.1679	0.0000	0.0000	0.0000
J4	COMB4	-0.3634	0.0000	9.0260	0.0000	0.0000	0.0000
J5	D	12.0953	0.0000	34.7405	0.0000	0.0000	0.0000
J5	W	-6.6413	0.0000	1.9924	0.0000	0.0000	0.0000
J5	L	0.9945	0.0000	2.8266	0.0000	0.0000	0.0000
J5	COMB1	16.9334	0.0000	48.6367	0.0000	0.0000	0.0000
J5	COMB2	16.1055	0.0000	46.2111	0.0000	0.0000	0.0000
J5	COMB3	9.6986	0.0000	44.6958	0.0000	0.0000	0.0000
J5	COMB4	20.3246	0.0000	41.5080	0.0000	0.0000	0.0000
J6	D	-12.0952	0.0000	33.9369	0.0000	0.0000	0.0000
J6	W	-7.3965	0.0000	-1.2586	0.0000	0.0000	0.0000
J6	L	-0.9945	0.0000	2.8281	0.0000	0.0000	0.0000
J6	COMB1	-16.9333	0.0000	47.5116	0.0000	0.0000	0.0000
J6	COMB2	-16.1054	0.0000	45.2493	0.0000	0.0000	0.0000
J6	COMB3	-20.9287	0.0000	41.1314	0.0000	0.0000	0.0000
J6	COMB4	-9.0943	0.0000	43.1452	0.0000	0.0000	0.0000

F R A M E E L E M E N T F O R C E S

FRAME	LOAD	LOC	P	V2	V3	T	M2	M3
F1	D							
		0.00	1.27	-3.17	0.00	0.00	0.00	-1.30
		5.4E-01	4.816E-01	-1.20	0.00	0.00	0.00	-6.217E-01
		1.08	0.00	0.00	0.00	0.00	0.00	0.00
F1	W							
		0.00	0.00	-9.600E-02	0.00	0.00	0.00	-3.447E-02
		5.4E-01	0.00	-3.200E-02	0.00	0.00	0.00	-1.723E-02
		1.08	0.00	0.00	0.00	0.00	0.00	0.00
F1	L							
		0.00	1.114E-01	-2.785E-01	0.00	0.00	0.00	-1.000E-01
		5.4E-01	3.714E-02	-9.285E-02	0.00	0.00	0.00	-5.000E-02
		1.08	0.00	0.00	0.00	0.00	0.00	0.00
F1	COMB1							
		0.00	1.77	-4.44	0.00	0.00	0.00	-1.82
		5.4E-01	6.742E-01	-1.69	0.00	0.00	0.00	-8.704E-01
		1.08	0.00	0.00	0.00	0.00	0.00	0.00
F1	COMB2							
		0.00	1.70	-4.25	0.00	0.00	0.00	-1.72
		5.4E-01	6.373E-01	-1.59	0.00	0.00	0.00	-8.260E-01
		1.08	0.00	0.00	0.00	0.00	0.00	0.00
F1	COMB3							
		0.00	1.58	-4.02	0.00	0.00	0.00	-1.63
		5.4E-01	5.965E-01	-1.52	0.00	0.00	0.00	-7.848E-01
		1.08	0.00	0.00	0.00	0.00	0.00	0.00
F1	COMB4							
		0.00	1.58	-3.87	0.00	0.00	0.00	-1.58
		5.4E-01	5.965E-01	-1.47	0.00	0.00	0.00	-7.572E-01
		1.08	0.00	0.00	0.00	0.00	0.00	0.00

F2 D

0.00	1.27	-3.17	0.00	0.00	0.00	-1.30
5.4E-01	4.816E-01	-1.20	0.00	0.00	0.00	-6.217E-01
1.08	0.00	0.00	0.00	0.00	0.00	0.00

F2 W

0.00	0.00	9.600E-01	0.00	0.00	0.00	3.447E-01
5.4E-01	0.00	3.200E-01	0.00	0.00	0.00	1.723E-01
1.08	0.00	0.00	0.00	0.00	0.00	0.00

F2 L

0.00	1.114E-01	-2.785E-01	0.00	0.00	0.00	-1.000E-01
5.4E-01	3.714E-02	-9.285E-02	0.00	0.00	0.00	-5.000E-02
1.08	0.00	0.00	0.00	0.00	0.00	0.00

F2 COMB1

0.00	1.77	-4.44	0.00	0.00	0.00	-1.82
5.4E-01	6.742E-01	-1.69	0.00	0.00	0.00	-8.704E-01
1.08	0.00	0.00	0.00	0.00	0.00	0.00

F2 COMB2

0.00	1.70	-4.25	0.00	0.00	0.00	-1.72
5.4E-01	6.373E-01	-1.59	0.00	0.00	0.00	-8.260E-01
1.08	0.00	0.00	0.00	0.00	0.00	0.00

F2 COMB3

0.00	1.58	-3.17	0.00	0.00	0.00	-1.33
5.4E-01	5.965E-01	-1.24	0.00	0.00	0.00	-6.332E-01
1.08	0.00	0.00	0.00	0.00	0.00	0.00

F2 COMB4

0.00	1.58	-4.71	0.00	0.00	0.00	-1.88
5.4E-01	5.965E-01	-1.75	0.00	0.00	0.00	-9.089E-01
1.08	0.00	0.00	0.00	0.00	0.00	0.00

F3 D

0.00	2.46	-7.66	0.00	0.00	0.00	-9.81
2.70	-2.060E-03	-1.57	0.00	0.00	0.00	1.14
5.39	-1.71	2.65	0.00	0.00	0.00	-1.30

F3 W

0.00	0.00	-1.20	0.00	0.00	0.00	-5.65
2.70	0.00	-1.04	0.00	0.00	0.00	-2.63
5.39	0.00	-9.128E-01	0.00	0.00	0.00	-3.447E-02

F3 L

0.00	1.871E-01	-6.010E-01	0.00	0.00	0.00	-8.438E-01
2.70	-2.049E-04	-1.374E-01	0.00	0.00	0.00	1.276E-01
5.39	-1.500E-01	2.335E-01	0.00	0.00	0.00	-1.000E-01

F3 COMB1

0.00	3.44	-10.73	0.00	0.00	0.00	-13.74
2.70	-2.883E-03	-2.20	0.00	0.00	0.00	1.59
5.39	-2.39	3.71	0.00	0.00	0.00	-1.82

F3 COMB2

0.00	3.25	-10.15	0.00	0.00	0.00	-13.13
2.70	-2.799E-03	-2.11	0.00	0.00	0.00	1.57
5.39	-2.29	3.55	0.00	0.00	0.00	-1.72

F3 COMB3

0.00	3.04	-10.45	0.00	0.00	0.00	-16.72
2.70	-2.574E-03	-2.79	0.00	0.00	0.00	-6.788E-01
5.39	-2.12	2.56	0.00	0.00	0.00	-1.63

F3 COMB4

0.00	3.04	-8.53	0.00	0.00	0.00	-7.68
2.70	-2.574E-03	-1.13	0.00	0.00	0.00	3.54
5.39	-2.12	4.03	0.00	0.00	0.00	-1.58

F4 D

0.00	2.15	-6.90	0.00	0.00	0.00	-9.81
2.70	-2.060E-03	-1.57	0.00	0.00	0.00	1.14
5.39	-1.71	2.65	0.00	0.00	0.00	-1.30

F4 W

0.00	0.00	2.59	0.00	0.00	0.00	5.69
2.70	0.00	9.888E-01	0.00	0.00	0.00	9.467E-01
5.39	0.00	-2.912E-01	0.00	0.00	0.00	3.447E-01

F4 L

0.00	1.871E-01	-6.010E-01	0.00	0.00	0.00	-8.439E-01
2.70	-2.049E-04	-1.374E-01	0.00	0.00	0.00	1.275E-01
5.39	-1.500E-01	2.334E-01	0.00	0.00	0.00	-1.000E-01

F4 COMB1

0.00	3.01	-9.66	0.00	0.00	0.00	-13.74
2.70	-2.883E-03	-2.20	0.00	0.00	0.00	1.59
5.39	-2.39	3.71	0.00	0.00	0.00	-1.82

F4 COMB2

0.00	2.88	-9.24	0.00	0.00	0.00	-13.13
2.70	-2.799E-03	-2.11	0.00	0.00	0.00	1.57
5.39	-2.29	3.55	0.00	0.00	0.00	-1.72

F4 COMB3

0.00	2.67	-6.51	0.00	0.00	0.00	-7.65
2.70	-2.574E-03	-1.17	0.00	0.00	0.00	2.19
5.39	-2.12	3.06	0.00	0.00	0.00	-1.33

F4 COMB4

0.00	2.67	-10.65	0.00	0.00	0.00	-16.75
2.70	-2.574E-03	-2.75	0.00	0.00	0.00	6.705E-01
5.39	-2.12	3.53	0.00	0.00	0.00	-1.88

F5 D

0.00	-28.49	-7.95	0.00	0.00	0.00	-9.81
5.72	-18.33	8.734E-01	0.00	0.00	0.00	9.91
11.43	-9.11	8.89	0.00	0.00	0.00	-19.74

F5 W

0.00	3.40	-5.25	0.00	0.00	0.00	-5.65
5.72	3.40	-2.993E-01	0.00	0.00	0.00	10.10
11.43	3.40	4.65	0.00	0.00	0.00	-2.19

F5 L

0.00	-2.35	-6.534E-01	0.00	0.00	0.00	-8.438E-01
5.72	-1.52	6.829E-02	0.00	0.00	0.00	8.129E-01
11.43	-6.103E-01	8.556E-01	0.00	0.00	0.00	-1.62

F5 COMB1

0.00	-39.88	-11.14	0.00	0.00	0.00	-13.74
5.72	-25.67	1.22	0.00	0.00	0.00	13.88
11.43	-12.76	12.44	0.00	0.00	0.00	-27.63

F5 COMB2

0.00	-37.94	-10.59	0.00	0.00	0.00	-13.13
5.72	-24.42	1.16	0.00	0.00	0.00	13.20
11.43	-11.91	12.03	0.00	0.00	0.00	-26.28

F5 COMB3

0.00	-32.64	-14.07	0.00	0.00	0.00	-16.72
5.72	-20.04	8.428E-01	0.00	0.00	0.00	20.38
11.43	-8.52	14.81	0.00	0.00	0.00	-26.24

F5 COMB4

0.00	-38.08	-5.67	0.00	0.00	0.00	-7.68
5.72	-25.48	1.32	0.00	0.00	0.00	4.22
11.43	-13.96	7.37	0.00	0.00	0.00	-22.75

F6 D

0.00	-7.53	-10.26	0.00	0.00	0.00	-19.74
5.72	-18.34	-8.628E-01	0.00	0.00	0.00	9.91
11.43	-28.50	7.96	0.00	0.00	0.00	-9.81

F6 W

0.00	-5.08	2.72	0.00	0.00	0.00	-2.19
5.72	-5.08	-6.911E-01	0.00	0.00	0.00	-7.91
11.43	-5.08	-4.10	0.00	0.00	0.00	5.69

F6 L

0.00	-7.624E-01	-7.234E-01	0.00	0.00	0.00	-1.62
5.72	-1.52	-6.729E-02	0.00	0.00	0.00	8.128E-01
11.43	-2.35	6.544E-01	0.00	0.00	0.00	-8.439E-01

F6 COMB1

0.00	-10.55	-14.37	0.00	0.00	0.00	-27.63
5.72	-25.68	-1.21	0.00	0.00	0.00	13.88
11.43	-39.90	11.15	0.00	0.00	0.00	-13.74

F6 COMB2

0.00	-10.26	-13.47	0.00	0.00	0.00	-26.28
5.72	-24.44	-1.14	0.00	0.00	0.00	13.19
11.43	-37.95	10.61	0.00	0.00	0.00	-13.13

F6 COMB3

0.00	-13.48	-10.50	0.00	0.00	0.00	-26.24
5.72	-26.83	-1.62	0.00	0.00	0.00	5.97
11.43	-39.43	6.60	0.00	0.00	0.00	-7.65

F6 COMB4

0.00	-5.36	-14.85	0.00	0.00	0.00	-22.75
5.72	-18.71	-5.162E-01	0.00	0.00	0.00	18.63
11.43	-31.31	13.17	0.00	0.00	0.00	-16.75

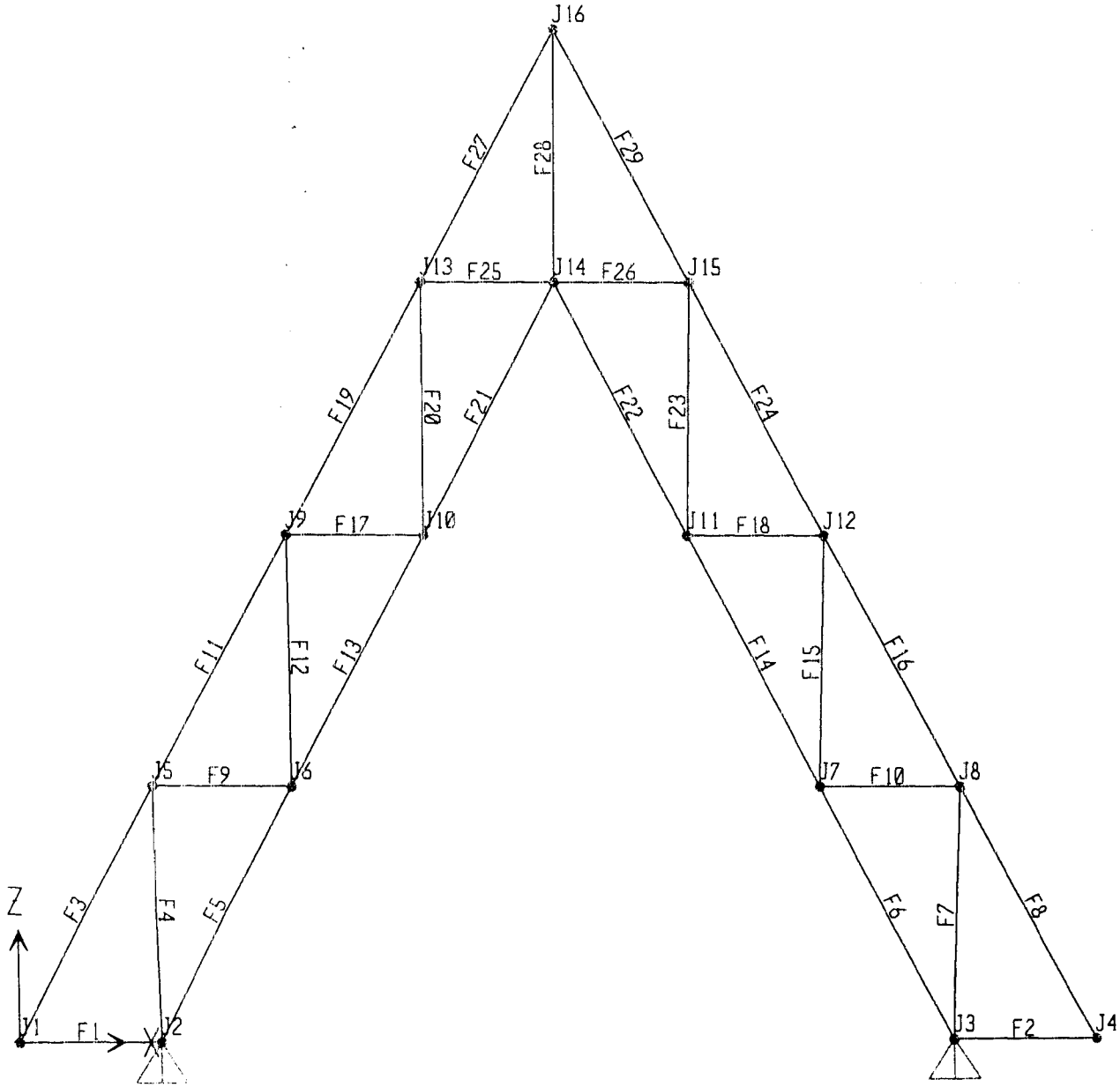
J16
F27
F28
F29
J13
F25
J14
F26
J15
F19
F20
F21
F22
F23
F24
J9
F17
J10
J11
F18
J12
F11
F12
F13
F14
F15
F16
J5
F9
J6
J7
F10
J8
Z
F3
F4
F5
F6
F7
F8
J1
F1
J2
J3
F2
J4

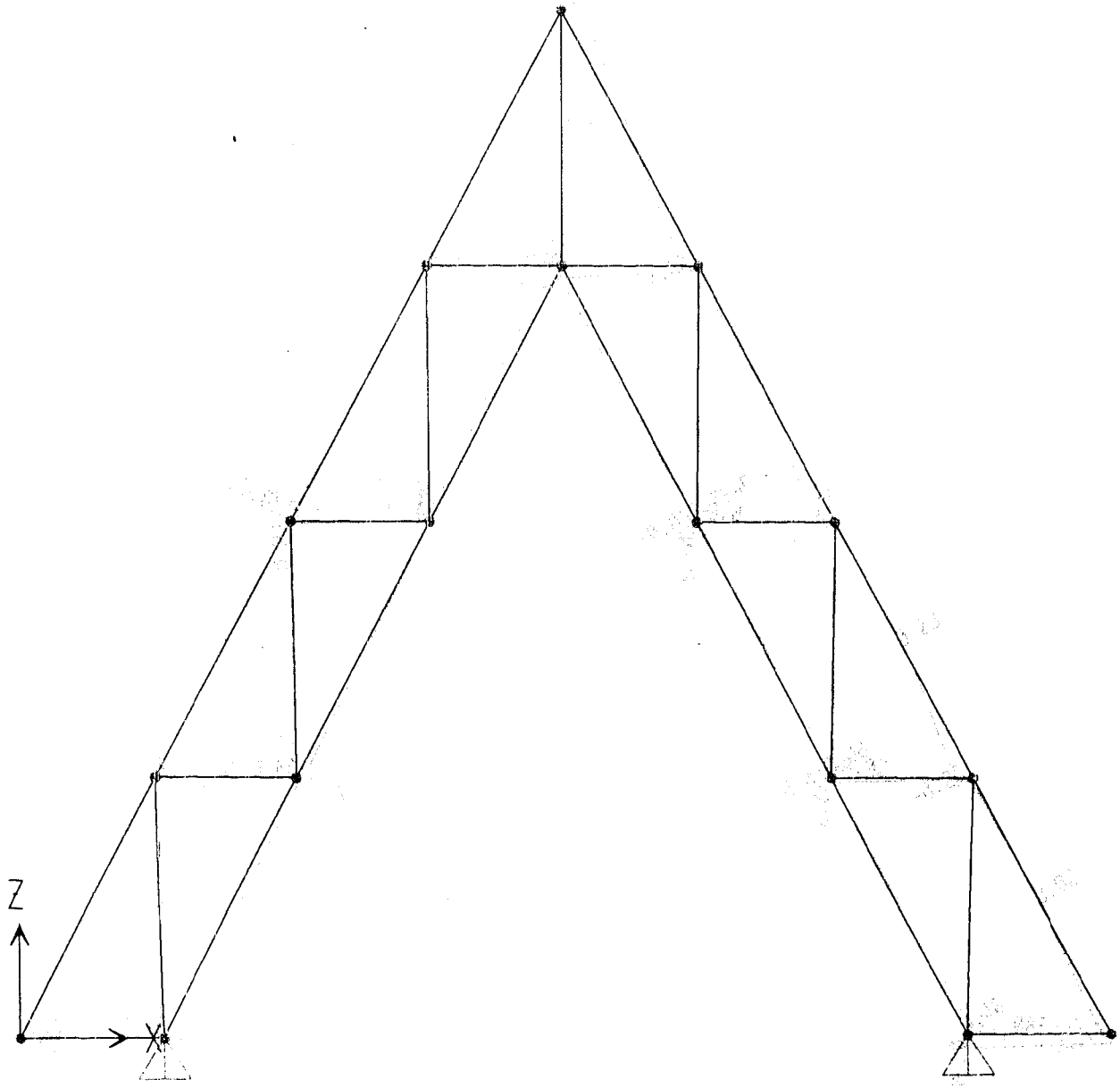
Z
X

FRAME ELEMENT FORCES

FRAME	LOAD	LOC	P	V2	V3	T	M2	M3
F1	COMB1							
		0.00	-8.650E-01	1.910E-01	0.00	0.00	0.00	6.223E-02
		1.7E-01	-8.650E-01	2.076E-01	0.00	0.00	0.00	2.935E-02
		3.3E-01	-8.650E-01	2.242E-01	0.00	0.00	0.00	-6.276E-03
		5.0E-01	-8.650E-01	2.409E-01	0.00	0.00	0.00	-4.465E-02
		6.6E-01	-8.650E-01	2.575E-01	0.00	0.00	0.00	-8.576E-02
F1	COMB2							
		0.00	-8.487E-01	1.892E-01	0.00	0.00	0.00	6.057E-02
		1.7E-01	-8.487E-01	2.034E-01	0.00	0.00	0.00	2.817E-02
		3.3E-01	-8.487E-01	2.177E-01	0.00	0.00	0.00	-6.570E-03
		5.0E-01	-8.487E-01	2.320E-01	0.00	0.00	0.00	-4.367E-02
		6.6E-01	-8.487E-01	2.462E-01	0.00	0.00	0.00	-8.311E-02
F1	COMB3							
		0.00	-1.27	2.726E-01	0.00	0.00	0.00	8.659E-02
		1.7E-01	-1.27	2.868E-01	0.00	0.00	0.00	4.044E-02
		3.3E-01	-1.27	3.011E-01	0.00	0.00	0.00	-8.063E-03
		5.0E-01	-1.27	3.153E-01	0.00	0.00	0.00	-5.892E-02
		6.6E-01	-1.27	3.296E-01	0.00	0.00	0.00	-1.121E-01
F1	COMB4							
		0.00	-1.27	2.726E-01	0.00	0.00	0.00	8.659E-02
		1.7E-01	-1.27	2.868E-01	0.00	0.00	0.00	4.044E-02
		3.3E-01	-1.27	3.011E-01	0.00	0.00	0.00	-8.063E-03
		5.0E-01	-1.27	3.153E-01	0.00	0.00	0.00	-5.892E-02
		6.6E-01	-1.27	3.296E-01	0.00	0.00	0.00	-1.121E-01
F2	COMB1							
		0.00	-8.650E-01	-2.575E-01	0.00	0.00	0.00	-8.576E-02
		1.7E-01	-8.650E-01	-2.409E-01	0.00	0.00	0.00	-4.465E-02
		3.3E-01	-8.650E-01	-2.242E-01	0.00	0.00	0.00	-6.276E-03
		5.0E-01	-8.650E-01	-2.076E-01	0.00	0.00	0.00	2.935E-02
		6.6E-01	-8.650E-01	-1.910E-01	0.00	0.00	0.00	6.223E-02
F2	COMB2							
		0.00	-8.487E-01	-2.462E-01	0.00	0.00	0.00	-8.311E-02
		1.7E-01	-8.487E-01	-2.320E-01	0.00	0.00	0.00	-4.367E-02
		3.3E-01	-8.487E-01	-2.177E-01	0.00	0.00	0.00	-6.570E-03
		5.0E-01	-8.487E-01	-2.034E-01	0.00	0.00	0.00	2.817E-02
		6.6E-01	-8.487E-01	-1.892E-01	0.00	0.00	0.00	6.057E-02
F2	COMB3							
		0.00	-5.252E-01	-1.979E-01	0.00	0.00	0.00	-6.633E-02
		1.7E-01	-5.252E-01	-1.836E-01	0.00	0.00	0.00	-3.485E-02
		3.3E-01	-5.252E-01	-1.694E-01	0.00	0.00	0.00	-5.734E-03
		5.0E-01	-5.252E-01	-1.551E-01	0.00	0.00	0.00	2.103E-02
		6.6E-01	-5.252E-01	-1.408E-01	0.00	0.00	0.00	4.545E-02
F2	COMB4							
		0.00	-5.252E-01	-1.979E-01	0.00	0.00	0.00	-6.633E-02
		1.7E-01	-5.252E-01	-1.836E-01	0.00	0.00	0.00	-3.485E-02
		3.3E-01	-5.252E-01	-1.694E-01	0.00	0.00	0.00	-5.734E-03
		5.0E-01	-5.252E-01	-1.551E-01	0.00	0.00	0.00	2.103E-02
		6.6E-01	-5.252E-01	-1.408E-01	0.00	0.00	0.00	4.545E-02
F3	COMB1							
		0.00	1.61	-1.091E-01	0.00	0.00	0.00	-6.223E-02
		6.5E-01	1.73	-4.611E-02	0.00	0.00	0.00	-1.144E-02
		1.31	1.84	1.689E-02	0.00	0.00	0.00	-1.879E-03
F3	COMB2							
		0.00	1.59	-1.007E-01	0.00	0.00	0.00	-6.057E-02

6.5E-01	1.69	-4.667E-02	0.00	0.00	0.00	-1.235E-02
1.31	1.79	7.325E-03	0.00	0.00	0.00	5.249E-04
F3 COMB3						
0.00	1.59	-5.769E-01	0.00	0.00	0.00	-8.659E-02
6.5E-01	1.69	-9.887E-02	0.00	0.00	0.00	-4.215E-03
1.31	1.79	1.24	0.00	0.00	0.00	4.282E-02
F3 COMB4						
0.00	1.59	-5.769E-01	0.00	0.00	0.00	-8.659E-02
6.5E-01	1.69	-9.887E-02	0.00	0.00	0.00	-4.215E-03
1.31	1.79	1.24	0.00	0.00	0.00	4.282E-02
F4 COMB1						
0.00	-6.68	1.241E-02	0.00	0.00	0.00	1.358E-02
5.8E-01	-6.62	1.418E-02	0.00	0.00	0.00	5.935E-03
1.15	-6.56	1.594E-02	0.00	0.00	0.00	-2.728E-03
F4 COMB2						
0.00	-6.57	1.277E-02	0.00	0.00	0.00	1.363E-02
5.8E-01	-6.52	1.428E-02	0.00	0.00	0.00	5.852E-03
1.15	-6.47	1.579E-02	0.00	0.00	0.00	-2.799E-03
F4 COMB3						
0.00	-8.47	4.391E-02	0.00	0.00	0.00	2.606E-02
5.8E-01	-8.42	4.542E-02	0.00	0.00	0.00	3.677E-04
1.15	-8.38	4.693E-02	0.00	0.00	0.00	-2.620E-02
F4 COMB4						
0.00	-8.47	4.391E-02	0.00	0.00	0.00	2.606E-02
5.8E-01	-8.42	4.542E-02	0.00	0.00	0.00	3.677E-04
1.15	-8.38	4.693E-02	0.00	0.00	0.00	-2.620E-02
F5 COMB1						
0.00	-7.52	-1.340E-01	0.00	0.00	0.00	-7.218E-02
6.5E-01	-7.40	-7.222E-02	0.00	0.00	0.00	-4.970E-03
1.30	-7.29	-1.039E-02	0.00	0.00	0.00	2.195E-02
F5 COMB2						
0.00	-7.34	-1.242E-01	0.00	0.00	0.00	-6.948E-02
6.5E-01	-7.24	-7.118E-02	0.00	0.00	0.00	-5.828E-03
1.30	-7.14	-1.819E-02	0.00	0.00	0.00	2.329E-02
F5 COMB3						
0.00	-9.416E-01	-1.745E-01	0.00	0.00	0.00	-8.606E-02
6.5E-01	-8.422E-01	-1.215E-01	0.00	0.00	0.00	1.038E-02
1.30	-7.428E-01	-6.850E-02	0.00	0.00	0.00	7.229E-02
F5 COMB4						
0.00	-9.416E-01	-1.745E-01	0.00	0.00	0.00	-8.606E-02
6.5E-01	-8.422E-01	-1.215E-01	0.00	0.00	0.00	1.038E-02
1.30	-7.428E-01	-6.850E-02	0.00	0.00	0.00	7.229E-02
F6 COMB1						
0.00	-7.29	1.039E-02	0.00	0.00	0.00	2.195E-02
6.5E-01	-7.40	7.222E-02	0.00	0.00	0.00	-4.970E-03
1.30	-7.52	1.340E-01	0.00	0.00	0.00	-7.218E-02
F6 COMB2						
0.00	-7.14	1.819E-02	0.00	0.00	0.00	2.329E-02
6.5E-01	-7.24	7.118E-02	0.00	0.00	0.00	-5.828E-03
1.30	-7.34	1.242E-01	0.00	0.00	0.00	-6.948E-02
F6 COMB3						
0.00	-11.97	-1.066E-02	0.00	0.00	0.00	-5.514E-03
6.5E-01	-12.07	4.233E-02	0.00	0.00	0.00	-1.583E-02
1.30	-12.17	9.532E-02	0.00	0.00	0.00	-6.068E-02
F6 COMB4						
0.00	-11.97	-1.066E-02	0.00	0.00	0.00	-5.514E-03
6.5E-01	-12.07	4.233E-02	0.00	0.00	0.00	-1.583E-02

1.30	-12.17	9.532E-02	0.00	0.00	0.00	-6.068E-02
F7 COMB1						
0.00	-6.68	1.241E-02	0.00	0.00	0.00	1.358E-02
5.8E-01	-6.62	1.418E-02	0.00	0.00	0.00	5.935E-03
1.15	-6.56	1.594E-02	0.00	0.00	0.00	-2.728E-03
F7 COMB2						
0.00	-6.57	1.277E-02	0.00	0.00	0.00	1.363E-02
5.8E-01	-6.52	1.428E-02	0.00	0.00	0.00	5.852E-03
1.15	-6.47	1.579E-02	0.00	0.00	0.00	-2.799E-03
F7 COMB3						
0.00	-5.62	-7.108E-03	0.00	0.00	0.00	5.645E-03
5.8E-01	-5.57	-5.596E-03	0.00	0.00	0.00	9.299E-03
1.15	-5.52	-4.084E-03	0.00	0.00	0.00	1.208E-02
F7 COMB4						
0.00	-5.62	-7.108E-03	0.00	0.00	0.00	5.645E-03
5.8E-01	-5.57	-5.596E-03	0.00	0.00	0.00	9.299E-03
1.15	-5.52	-4.084E-03	0.00	0.00	0.00	1.208E-02
F8 COMB1						
0.00	1.84	-1.689E-02	0.00	0.00	0.00	-1.879E-03
6.5E-01	1.73	4.611E-02	0.00	0.00	0.00	-1.144E-02
1.31	1.61	1.091E-01	0.00	0.00	0.00	-6.223E-02
F8 COMB2						
0.00	1.79	-7.325E-03	0.00	0.00	0.00	5.249E-04
6.5E-01	1.69	4.667E-02	0.00	0.00	0.00	-1.235E-02
1.31	1.59	1.007E-01	0.00	0.00	0.00	-6.057E-02
F8 COMB3						
0.00	1.55	-3.839E-02	0.00	0.00	0.00	-2.502E-02
6.5E-01	1.45	1.561E-02	0.00	0.00	0.00	-1.757E-02
1.31	1.35	-1.384E-01	0.00	0.00	0.00	-4.545E-02
F8 COMB4						
0.00	1.55	-3.839E-02	0.00	0.00	0.00	-2.502E-02
6.5E-01	1.45	1.561E-02	0.00	0.00	0.00	-1.757E-02
1.31	1.35	-1.384E-01	0.00	0.00	0.00	-4.545E-02
F9 COMB1						
0.00	2.22	8.476E-02	0.00	0.00	0.00	3.303E-02
1.6E-01	2.22	1.011E-01	0.00	0.00	0.00	1.796E-02
3.2E-01	2.22	1.174E-01	0.00	0.00	0.00	2.534E-04
4.9E-01	2.22	1.338E-01	0.00	0.00	0.00	-2.010E-02
6.5E-01	2.22	1.501E-01	0.00	0.00	0.00	-4.311E-02
F9 COMB2						
0.00	2.17	8.906E-02	0.00	0.00	0.00	3.341E-02
1.6E-01	2.17	1.031E-01	0.00	0.00	0.00	1.784E-02
3.2E-01	2.17	1.171E-01	0.00	0.00	0.00	-1.506E-06
4.9E-01	2.17	1.311E-01	0.00	0.00	0.00	-2.011E-02
6.5E-01	2.17	1.451E-01	0.00	0.00	0.00	-4.249E-02
F9 COMB3						
0.00	2.11	1.919E-01	0.00	0.00	0.00	7.331E-02
1.6E-01	2.11	2.059E-01	0.00	0.00	0.00	4.107E-02
3.2E-01	2.11	2.199E-01	0.00	0.00	0.00	6.559E-03
4.9E-01	2.11	2.339E-01	0.00	0.00	0.00	-3.022E-02
6.5E-01	2.11	2.479E-01	0.00	0.00	0.00	-6.927E-02
F9 COMB4						
0.00	2.11	1.919E-01	0.00	0.00	0.00	7.331E-02
1.6E-01	2.11	2.059E-01	0.00	0.00	0.00	4.107E-02
3.2E-01	2.11	2.199E-01	0.00	0.00	0.00	6.559E-03
4.9E-01	2.11	2.339E-01	0.00	0.00	0.00	-3.022E-02
6.5E-01	2.11	2.479E-01	0.00	0.00	0.00	-6.927E-02

F10 COMB1

0.00	2.22	-1.501E-01	0.00	0.00	0.00 -4.311E-02
1.6E-01	2.22	-1.338E-01	0.00	0.00	0.00 -2.010E-02
3.2E-01	2.22	-1.174E-01	0.00	0.00	0.00 2.534E-04
4.9E-01	2.22	-1.011E-01	0.00	0.00	0.00 1.796E-02
6.5E-01	2.22	-8.476E-02	0.00	0.00	0.00 3.303E-02

F10 COMB2

0.00	2.17	-1.451E-01	0.00	0.00	0.00 -4.249E-02
1.6E-01	2.17	-1.311E-01	0.00	0.00	0.00 -2.011E-02
3.2E-01	2.17	-1.171E-01	0.00	0.00	0.00 -1.506E-06
4.9E-01	2.17	-1.031E-01	0.00	0.00	0.00 1.784E-02
6.5E-01	2.17	-8.906E-02	0.00	0.00	0.00 3.341E-02

F10 COMB3

0.00	2.08	-6.719E-02	0.00	0.00	0.00 -2.118E-02
1.6E-01	2.08	-5.318E-02	0.00	0.00	0.00 -1.143E-02
3.2E-01	2.08	-3.918E-02	0.00	0.00	0.00 -3.941E-03
4.9E-01	2.08	-2.518E-02	0.00	0.00	0.00 1.275E-03
6.5E-01	2.08	-1.117E-02	0.00	0.00	0.00 4.221E-03

F10 COMB4

0.00	2.08	-6.719E-02	0.00	0.00	0.00 -2.118E-02
1.6E-01	2.08	-5.318E-02	0.00	0.00	0.00 -1.143E-02
3.2E-01	2.08	-3.918E-02	0.00	0.00	0.00 -3.941E-03
4.9E-01	2.08	-2.518E-02	0.00	0.00	0.00 1.275E-03
6.5E-01	2.08	-1.117E-02	0.00	0.00	0.00 4.221E-03

F11 COMB1

0.00	-2.57	-9.733E-02	0.00	0.00	0.00 -3.218E-02
6.5E-01	-2.45	-3.433E-02	0.00	0.00	0.00 1.090E-02
1.31	-2.34	2.867E-02	0.00	0.00	0.00 1.275E-02

F11 COMB2

0.00	-2.49	-8.805E-02	0.00	0.00	0.00 -3.009E-02
6.5E-01	-2.39	-3.405E-02	0.00	0.00	0.00 9.865E-03
1.31	-2.30	1.995E-02	0.00	0.00	0.00 1.448E-02

F11 COMB3

0.00	-4.44	-8.819E-02	0.00	0.00	0.00 -4.295E-03
6.5E-01	-4.34	-3.419E-02	0.00	0.00	0.00 3.575E-02
1.31	-4.24	1.30	0.00	0.00	0.00 4.045E-02

F11 COMB4

0.00	-4.44	-8.819E-02	0.00	0.00	0.00 -4.295E-03
6.5E-01	-4.34	-3.419E-02	0.00	0.00	0.00 3.575E-02
1.31	-4.24	1.30	0.00	0.00	0.00 4.045E-02

F12 COMB1

0.00	-3.70	-4.441E-03	0.00	0.00	0.00 -5.249E-03
5.8E-01	-3.64	-3.265E-03	0.00	0.00	0.00 -3.033E-03
1.15	-3.58	-2.089E-03	0.00	0.00	0.00 -1.494E-03

F12 COMB2

0.00	-3.65	-4.015E-03	0.00	0.00	0.00 -5.038E-03
5.8E-01	-3.60	-3.007E-03	0.00	0.00	0.00 -3.019E-03
1.15	-3.55	-1.999E-03	0.00	0.00	0.00 -1.580E-03

F12 COMB3

0.00	-3.50	9.612E-03	0.00	0.00	0.00 -8.229E-03
5.8E-01	-3.45	1.062E-02	0.00	0.00	0.00 -1.405E-02
1.15	-3.40	1.163E-02	0.00	0.00	0.00 -2.045E-02

F12 COMB4

0.00	-3.50	9.612E-03	0.00	0.00	0.00 -8.229E-03
5.8E-01	-3.45	1.062E-02	0.00	0.00	0.00 -1.405E-02
1.15	-3.40	1.163E-02	0.00	0.00	0.00 -2.045E-02

0.00	-1.86	-2.564E-02	0.00	0.00	0.00	-4.208E-03
6.5E-01	-1.96	2.836E-02	0.00	0.00	0.00	-5.099E-03
1.31	-2.06	-2.536E-01	0.00	0.00	0.00	-4.133E-02

F16 COMB4

0.00	-1.86	-2.564E-02	0.00	0.00	0.00	-4.208E-03
6.5E-01	-1.96	2.836E-02	0.00	0.00	0.00	-5.099E-03
1.31	-2.06	-2.536E-01	0.00	0.00	0.00	-4.133E-02

F17 COMB1

0.00	4.487E-01	-1.976E-02	0.00	0.00	0.00	6.061E-03
1.6E-01	4.487E-01	-3.713E-03	0.00	0.00	0.00	7.929E-03
3.2E-01	4.487E-01	1.233E-02	0.00	0.00	0.00	7.243E-03
4.8E-01	4.487E-01	2.837E-02	0.00	0.00	0.00	4.004E-03
6.4E-01	4.487E-01	4.442E-02	0.00	0.00	0.00	-1.789E-03

F17 COMB2

0.00	4.402E-01	-1.356E-02	0.00	0.00	0.00	6.883E-03
1.6E-01	4.402E-01	1.950E-04	0.00	0.00	0.00	7.947E-03
3.2E-01	4.402E-01	1.395E-02	0.00	0.00	0.00	6.821E-03
4.8E-01	4.402E-01	2.770E-02	0.00	0.00	0.00	3.507E-03
6.4E-01	4.402E-01	4.145E-02	0.00	0.00	0.00	-1.996E-03

F17 COMB3

0.00	-8.924E-01	-3.275E-02	0.00	0.00	0.00	7.505E-03
1.6E-01	-8.924E-01	-1.900E-02	0.00	0.00	0.00	1.162E-02
3.2E-01	-8.924E-01	-5.244E-03	0.00	0.00	0.00	1.355E-02
4.8E-01	-8.924E-01	8.508E-03	0.00	0.00	0.00	1.329E-02
6.4E-01	-8.924E-01	2.226E-02	0.00	0.00	0.00	1.084E-02

F17 COMB4

0.00	-8.924E-01	-3.275E-02	0.00	0.00	0.00	7.505E-03
1.6E-01	-8.924E-01	-1.900E-02	0.00	0.00	0.00	1.162E-02
3.2E-01	-8.924E-01	-5.244E-03	0.00	0.00	0.00	1.355E-02
4.8E-01	-8.924E-01	8.508E-03	0.00	0.00	0.00	1.329E-02
6.4E-01	-8.924E-01	2.226E-02	0.00	0.00	0.00	1.084E-02

F18 COMB1

0.00	4.487E-01	-4.442E-02	0.00	0.00	0.00	-1.789E-03
1.6E-01	4.487E-01	-2.837E-02	0.00	0.00	0.00	4.004E-03
3.2E-01	4.487E-01	-1.233E-02	0.00	0.00	0.00	7.243E-03
4.8E-01	4.487E-01	3.713E-03	0.00	0.00	0.00	7.929E-03
6.4E-01	4.487E-01	1.976E-02	0.00	0.00	0.00	6.061E-03

F18 COMB2

0.00	4.402E-01	-4.145E-02	0.00	0.00	0.00	-1.996E-03
1.6E-01	4.402E-01	-2.770E-02	0.00	0.00	0.00	3.507E-03
3.2E-01	4.402E-01	-1.395E-02	0.00	0.00	0.00	6.821E-03
4.8E-01	4.402E-01	-1.950E-04	0.00	0.00	0.00	7.947E-03
6.4E-01	4.402E-01	1.356E-02	0.00	0.00	0.00	6.883E-03

F18 COMB3

0.00	8.625E-01	-3.755E-03	0.00	0.00	0.00	6.803E-03
1.6E-01	8.625E-01	9.997E-03	0.00	0.00	0.00	6.306E-03
3.2E-01	8.625E-01	2.375E-02	0.00	0.00	0.00	3.621E-03
4.8E-01	8.625E-01	3.750E-02	0.00	0.00	0.00	-1.254E-03
6.4E-01	8.625E-01	5.125E-02	0.00	0.00	0.00	-8.317E-03

F18 COMB4

0.00	8.625E-01	-3.755E-03	0.00	0.00	0.00	6.803E-03
1.6E-01	8.625E-01	9.997E-03	0.00	0.00	0.00	6.306E-03
3.2E-01	8.625E-01	2.375E-02	0.00	0.00	0.00	3.621E-03
4.8E-01	8.625E-01	3.750E-02	0.00	0.00	0.00	-1.254E-03
6.4E-01	8.625E-01	5.125E-02	0.00	0.00	0.00	-8.317E-03

F19 COMB1

0.00	-3.26	-4.171E-02	0.00	0.00	0.00	8.186E-03

1.30	-5.86	2.754E-03	0.00	0.00	0.00	4.374E-03
F22 COMB4						
0.00	-5.66	-1.032E-01	0.00	0.00	0.00	-6.110E-02
6.5E-01	-5.76	-5.024E-02	0.00	0.00	0.00	-1.110E-02
1.30	-5.86	2.754E-03	0.00	0.00	0.00	4.374E-03
F23 COMB1						
0.00	-7.177E-01	-1.047E-02	0.00	0.00	0.00	-7.276E-03
5.8E-01	-6.597E-01	-9.878E-03	0.00	0.00	0.00	-1.427E-03
1.15	-6.018E-01	-9.290E-03	0.00	0.00	0.00	4.084E-03
F23 COMB2						
0.00	-7.367E-01	-9.781E-03	0.00	0.00	0.00	-6.952E-03
5.8E-01	-6.870E-01	-9.277E-03	0.00	0.00	0.00	-1.472E-03
1.15	-6.373E-01	-8.773E-03	0.00	0.00	0.00	3.717E-03
F23 COMB3						
0.00	-1.55	-1.484E-02	0.00	0.00	0.00	-5.361E-03
5.8E-01	-1.50	-1.434E-02	0.00	0.00	0.00	3.028E-03
1.15	-1.45	-1.383E-02	0.00	0.00	0.00	1.113E-02
F23 COMB4						
0.00	-1.55	-1.484E-02	0.00	0.00	0.00	-5.361E-03
5.8E-01	-1.50	-1.434E-02	0.00	0.00	0.00	3.028E-03
1.15	-1.45	-1.383E-02	0.00	0.00	0.00	1.113E-02
F24 COMB1						
0.00	-3.03	-8.429E-02	0.00	0.00	0.00	-1.968E-02
6.5E-01	-3.14	-2.129E-02	0.00	0.00	0.00	1.487E-02
1.31	-3.26	4.171E-02	0.00	0.00	0.00	8.186E-03
F24 COMB2						
0.00	-2.97	-7.396E-02	0.00	0.00	0.00	-1.696E-02
6.5E-01	-3.07	-1.996E-02	0.00	0.00	0.00	1.378E-02
1.31	-3.17	3.404E-02	0.00	0.00	0.00	9.173E-03
F24 COMB3						
0.00	-2.87	-6.439E-02	0.00	0.00	0.00	-2.171E-02
6.5E-01	-2.97	-1.039E-02	0.00	0.00	0.00	2.756E-03
1.31	-3.07	-2.924E-01	0.00	0.00	0.00	-8.116E-03
F24 COMB4						
0.00	-2.87	-6.439E-02	0.00	0.00	0.00	-2.171E-02
6.5E-01	-2.97	-1.039E-02	0.00	0.00	0.00	2.756E-03
1.31	-3.07	-2.924E-01	0.00	0.00	0.00	-8.116E-03
F25 COMB1						
0.00	-1.32	5.820E-02	0.00	0.00	0.00	1.608E-02
1.6E-01	-1.32	8.970E-02	0.00	0.00	0.00	4.528E-03
3.1E-01	-1.32	1.212E-01	0.00	0.00	0.00	-1.195E-02
4.7E-01	-1.32	1.527E-01	0.00	0.00	0.00	-3.335E-02
6.3E-01	-1.32	1.842E-01	0.00	0.00	0.00	-5.967E-02
F25 COMB2						
0.00	-1.29	6.742E-02	0.00	0.00	0.00	1.715E-02
1.6E-01	-1.29	9.442E-02	0.00	0.00	0.00	4.511E-03
3.1E-01	-1.29	1.214E-01	0.00	0.00	0.00	-1.235E-02
4.7E-01	-1.29	1.484E-01	0.00	0.00	0.00	-3.343E-02
6.3E-01	-1.29	1.754E-01	0.00	0.00	0.00	-5.873E-02
F25 COMB3						
0.00	-3.93	7.972E-02	0.00	0.00	0.00	1.587E-02
1.6E-01	-3.93	1.067E-01	0.00	0.00	0.00	1.302E-03
3.1E-01	-3.93	1.337E-01	0.00	0.00	0.00	-1.748E-02
4.7E-01	-3.93	1.607E-01	0.00	0.00	0.00	-4.049E-02
6.3E-01	-3.93	1.877E-01	0.00	0.00	0.00	-6.771E-02
F25 COMB4						
0.00	-3.93	7.972E-02	0.00	0.00	0.00	1.587E-02

1.6E-01	-3.93	1.067E-01	0.00	0.00	0.00	1.302E-03
3.1E-01	-3.93	1.337E-01	0.00	0.00	0.00	-1.748E-02
4.7E-01	-3.93	1.607E-01	0.00	0.00	0.00	-4.049E-02
6.3E-01	-3.93	1.877E-01	0.00	0.00	0.00	-6.771E-02

F26 COMB1

0.00	-1.32	-1.842E-01	0.00	0.00	0.00	-5.967E-02
1.6E-01	-1.32	-1.527E-01	0.00	0.00	0.00	-3.335E-02
3.1E-01	-1.32	-1.212E-01	0.00	0.00	0.00	-1.195E-02
4.7E-01	-1.32	-8.970E-02	0.00	0.00	0.00	4.528E-03
6.3E-01	-1.32	-5.820E-02	0.00	0.00	0.00	1.608E-02

F26 COMB2

0.00	-1.29	-1.754E-01	0.00	0.00	0.00	-5.873E-02
1.6E-01	-1.29	-1.484E-01	0.00	0.00	0.00	-3.343E-02
3.1E-01	-1.29	-1.214E-01	0.00	0.00	0.00	-1.235E-02
4.7E-01	-1.29	-9.442E-02	0.00	0.00	0.00	4.511E-03
6.3E-01	-1.29	-6.742E-02	0.00	0.00	0.00	1.715E-02

F26 COMB3

0.00	-2.999E-01	-1.841E-01	0.00	0.00	0.00	-7.045E-02
1.6E-01	-2.999E-01	-1.571E-01	0.00	0.00	0.00	-4.380E-02
3.1E-01	-2.999E-01	-1.301E-01	0.00	0.00	0.00	-2.137E-02
4.7E-01	-2.999E-01	-1.031E-01	0.00	0.00	0.00	-3.153E-03
6.3E-01	-2.999E-01	-7.606E-02	0.00	0.00	0.00	1.084E-02

F26 COMB4

0.00	-2.999E-01	-1.841E-01	0.00	0.00	0.00	-7.045E-02
1.6E-01	-2.999E-01	-1.571E-01	0.00	0.00	0.00	-4.380E-02
3.1E-01	-2.999E-01	-1.301E-01	0.00	0.00	0.00	-2.137E-02
4.7E-01	-2.999E-01	-1.031E-01	0.00	0.00	0.00	-3.153E-03
6.3E-01	-2.999E-01	-7.606E-02	0.00	0.00	0.00	1.084E-02

F27 COMB1

0.00	-5.897E-01	-9.177E-02	0.00	0.00	0.00	-3.984E-02
6.5E-01	-4.738E-01	-2.877E-02	0.00	0.00	0.00	-4.008E-04
1.31	-3.579E-01	3.423E-02	0.00	0.00	0.00	-2.187E-03

F27 COMB2

0.00	-5.649E-01	-8.274E-02	0.00	0.00	0.00	-3.783E-02
6.5E-01	-4.656E-01	-2.874E-02	0.00	0.00	0.00	-1.351E-03
1.31	-3.662E-01	2.526E-02	0.00	0.00	0.00	-2.148E-04

F27 COMB3

0.00	1.03	-9.523E-02	0.00	0.00	0.00	-5.295E-02
6.5E-01	1.13	-4.123E-02	0.00	0.00	0.00	-8.295E-03
1.31	1.23	1.29	0.00	0.00	0.00	1.019E-03

F27 COMB4

0.00	1.03	-9.523E-02	0.00	0.00	0.00	-5.295E-02
6.5E-01	1.13	-4.123E-02	0.00	0.00	0.00	-8.295E-03
1.31	1.23	1.29	0.00	0.00	0.00	1.019E-03

F28 COMB1

0.00	-2.24	0.00	0.00	0.00	0.00	0.00
5.8E-01	-2.18	0.00	0.00	0.00	0.00	0.00
1.15	-2.12	0.00	0.00	0.00	0.00	0.00

F28 COMB2

0.00	-2.22	0.00	0.00	0.00	0.00	0.00
5.8E-01	-2.17	0.00	0.00	0.00	0.00	0.00
1.15	-2.12	0.00	0.00	0.00	0.00	0.00

F28 COMB3

0.00	-2.60	1.314E-02	0.00	0.00	0.00	1.011E-02
5.8E-01	-2.56	1.314E-02	0.00	0.00	0.00	2.557E-03
1.15	-2.51	1.314E-02	0.00	0.00	0.00	-4.997E-03

F28 COMB4

LAMPIRAN 19

PERHITUNGAN ***SAP – 2000*** TANGGA ENTRANCE

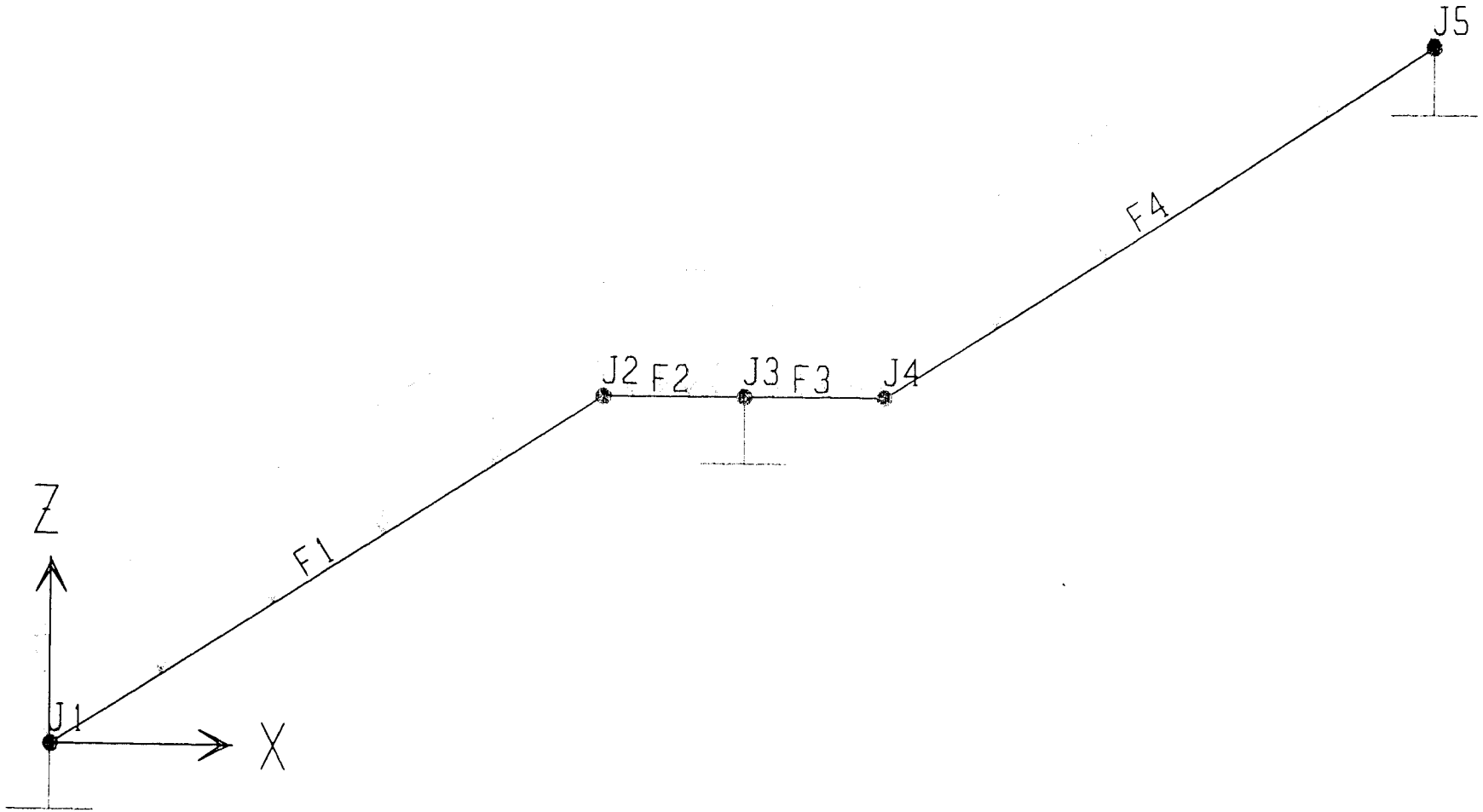
J5
F4
J2
F2
J3
F3
J4
Z
F1
J1
X

LAMPIRAN 20

PERHITUNGAN *SAP – 2000* TANGGA UTAMA

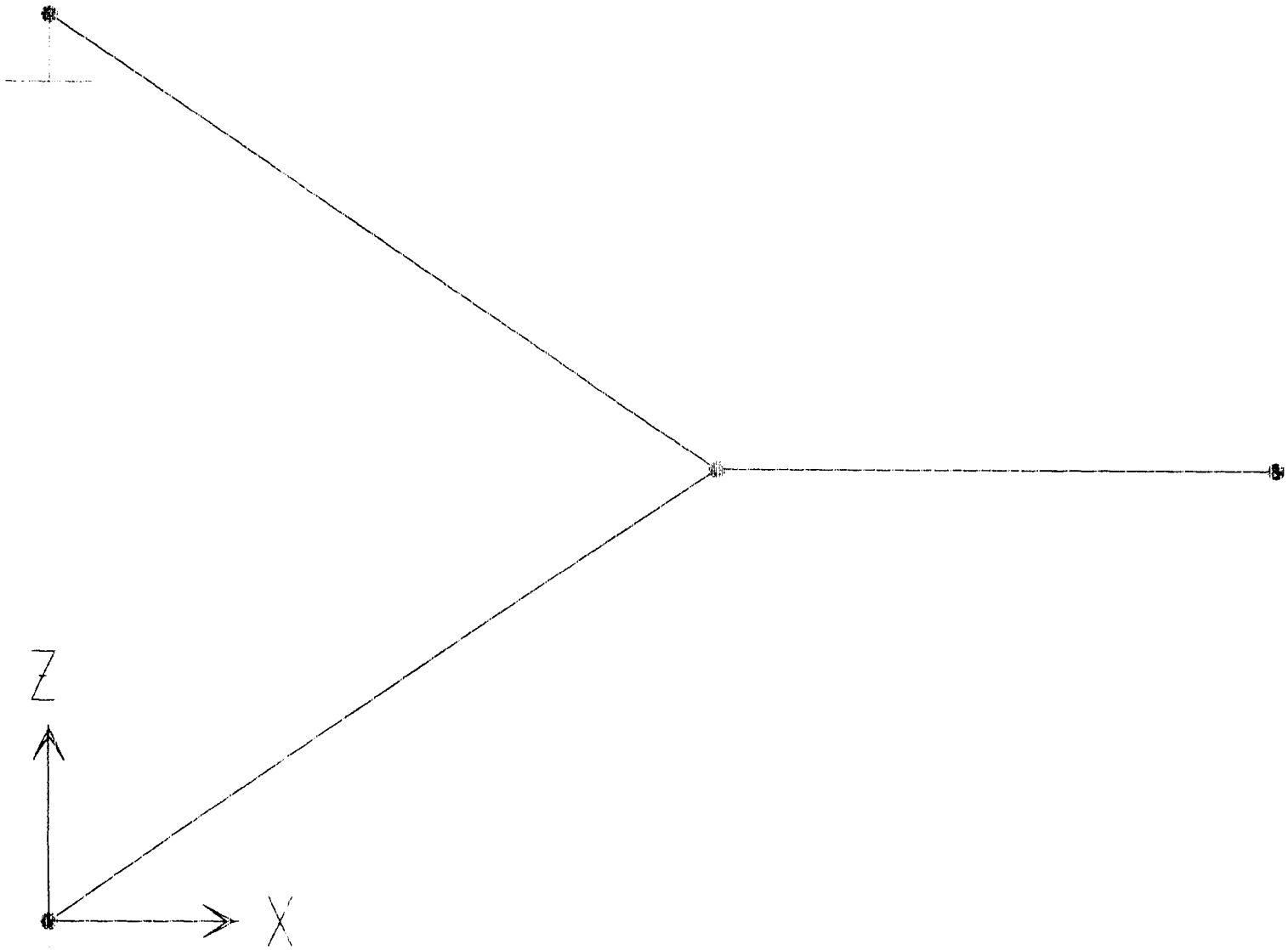
Z
X

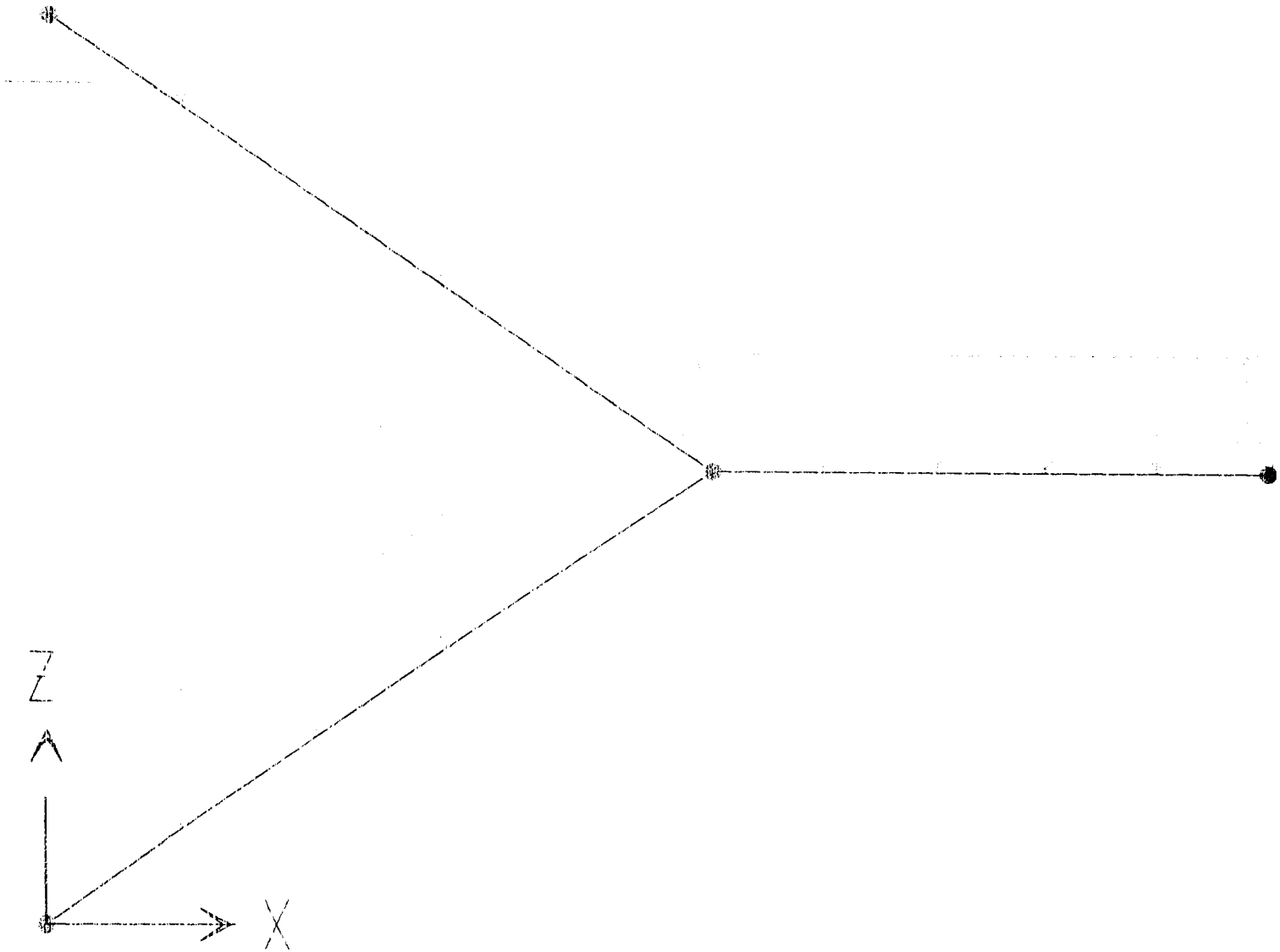
Z
X

SAP2000 V7.42 File: TANGGA PUTAR KN-m Units PAGE 1
9/5/05 12:23:33

WORK GROUP

J O I N T D I S P L A C E M E N T S

JOINT	LOAD	U1	U2	U3	R1	R2	R3
1	LOAD1	0.0000	0.0000	0.0000	0.0000	0.0000	0.0000
2	LOAD1	0.0000	0.0000	-2.081E-05	0.0000	7.083E-05	0.0000
3	LOAD1	0.0000	0.0000	-2.198E-04	0.0000	9.655E-05	0.0000
4	LOAD1	0.0000	0.0000	0.0000	0.0000	0.0000	0.0000

SAP2000 V7.42 File: TANGGA PUTAR KN-m Units PAGE 2
9/5/05 12:23:33

WORK GROUP

J O I N T R E A C T I O N S

JOINT	LOAD	F1	F2	F3	M1	M2	M3
1	LOAD1	62.9660	0.0000	64.4566	0.0000	-11.1778	0.0000
4	LOAD1	-62.9660	0.0000	64.4566	0.0000	-11.1778	0.0000

SAP2000 V7.42 File: TANGGA PUTAR KN-m Units PAGE 3
9/5/05 12:23:33

WORK GROUP

F R A M E E L E M E N T F O R C E S

FRAME	LOAD	LOC	P	V2	V3	T	M2	M3
1	LOAD1	0.00	-88.14	-18.70	0.00	0.00	0.00	-11.18
		1.80	-74.34	2.00	0.00	0.00	0.00	3.88
		3.61	-60.55	22.70	0.00	0.00	0.00	-18.38
2	LOAD1	0.00	0.00	-29.40	0.00	0.00	0.00	-36.75
		6.3E-01	0.00	-22.05	0.00	0.00	0.00	-20.67

LAMPIRAN 21

PERHITUNGAN *SAP 2000* TANGGA SEKUNDER

SAP2000

9/5/05 12:25:15

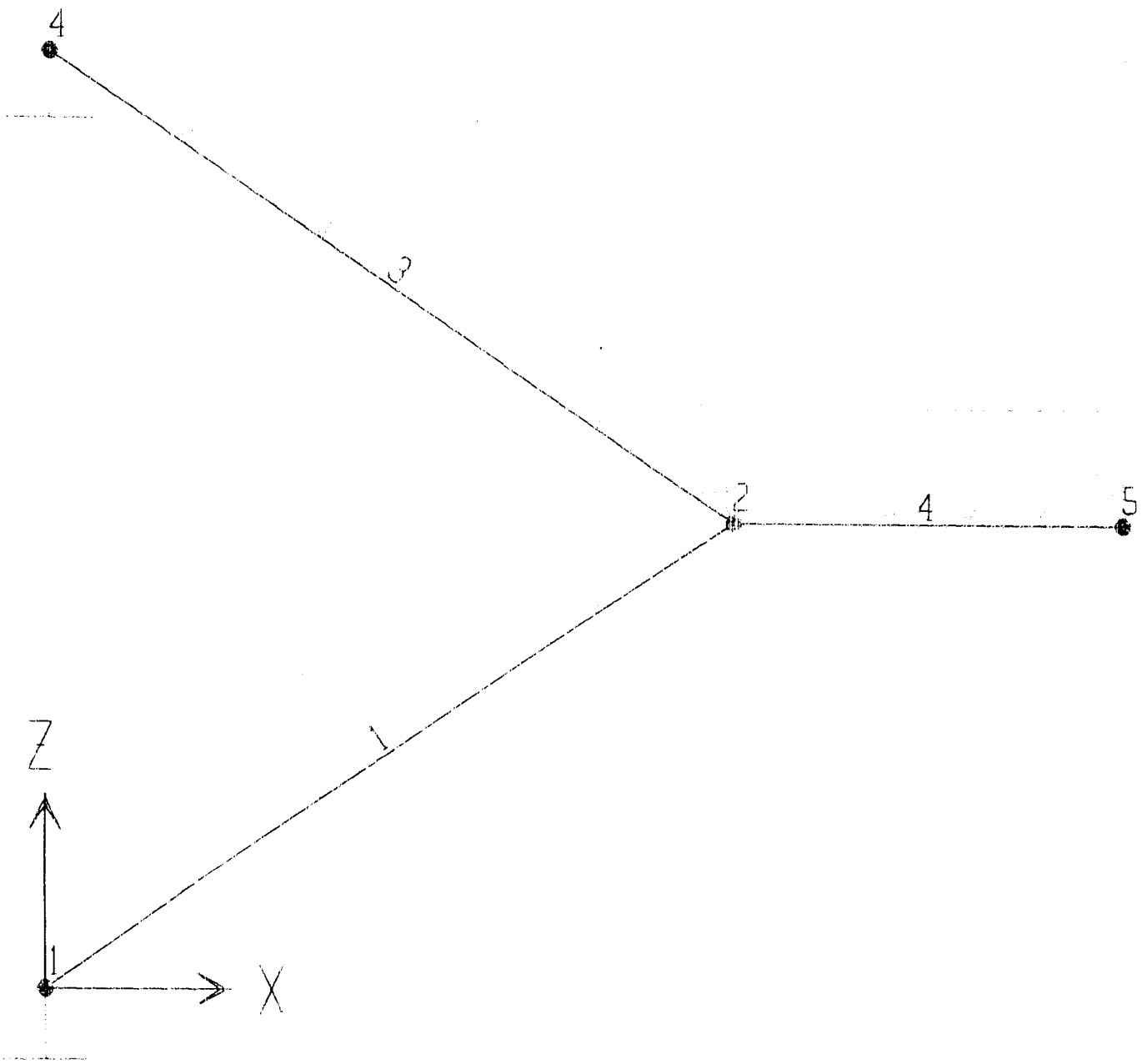

SAP2000 v7.42 File: TANGGA SEK KN-m Units PAGE 1
9/5/05 12:27:22

WORK GROUP

J O I N T D I S P L A C E M E N T S

JOINT	LOAD	U1	U2	U3	R1	R2	R3
1	LOAD1	0.0000	0.0000	0.0000	0.0000	0.0000	0.0000
2	LOAD1	0.0000	0.0000	-1.677E-05	0.0000	-3.380E-06	0.0000
4	LOAD1	0.0000	0.0000	0.0000	0.0000	0.0000	0.0000
5	LOAD1	0.0000	0.0000	-4.366E-05	0.0000	2.043E-05	0.0000

SAP2000 v7.42 File: TANGGA SEK KN-m Units PAGE 2
9/5/05 12:27:22

WORK GROUP

J O I N T R E A C T I O N S

JOINT	LOAD	F1	F2	F3	M1	M2	M3
1	LOAD1	48.7481	0.0000	59.7526	0.0000	-15.6234	0.0000
4	LOAD1	-48.7481	0.0000	59.7526	0.0000	-15.6234	0.0000

SAP2000 v7.42 File: TANGGA SEK KN-m Units PAGE 3
9/5/05 12:27:22

WORK GROUP

F R A M E E L E M E N T F O R C E S

FRAME	LOAD	LOC	P	V2	V3	T	M2	M3
1	LOAD1	0.00	-73.71	-22.68	0.00	0.00	0.00	-15.62
		1.80	-59.91	-1.98	0.00	0.00	0.00	6.60
		3.61	-46.11	18.72	0.00	0.00	0.00	-8.50
3	LOAD1	0.00	46.11	-18.72	0.00	0.00	0.00	-8.50
		1.80	59.91	1.98	0.00	0.00	0.00	6.60

		3.61	73.71	22.68	0.00	0.00	0.00
	4 LOAD1						
		0.00	0.00	-19.99	0.00	0.00	0.00
		4.3E-01	0.00	-14.99	0.00	0.00	0.00
		8.5E-01	0.00	-10.00	0.00	0.00	0.00
		1.28	0.00	-5.00	0.00	0.00	0.00
		1.70	0.00	0.00	0.00	0.00	0.00

LAMPIRAN 22

PERHITUNGAN ***SAP – 2000*** STRUKTUR BANGUNAN

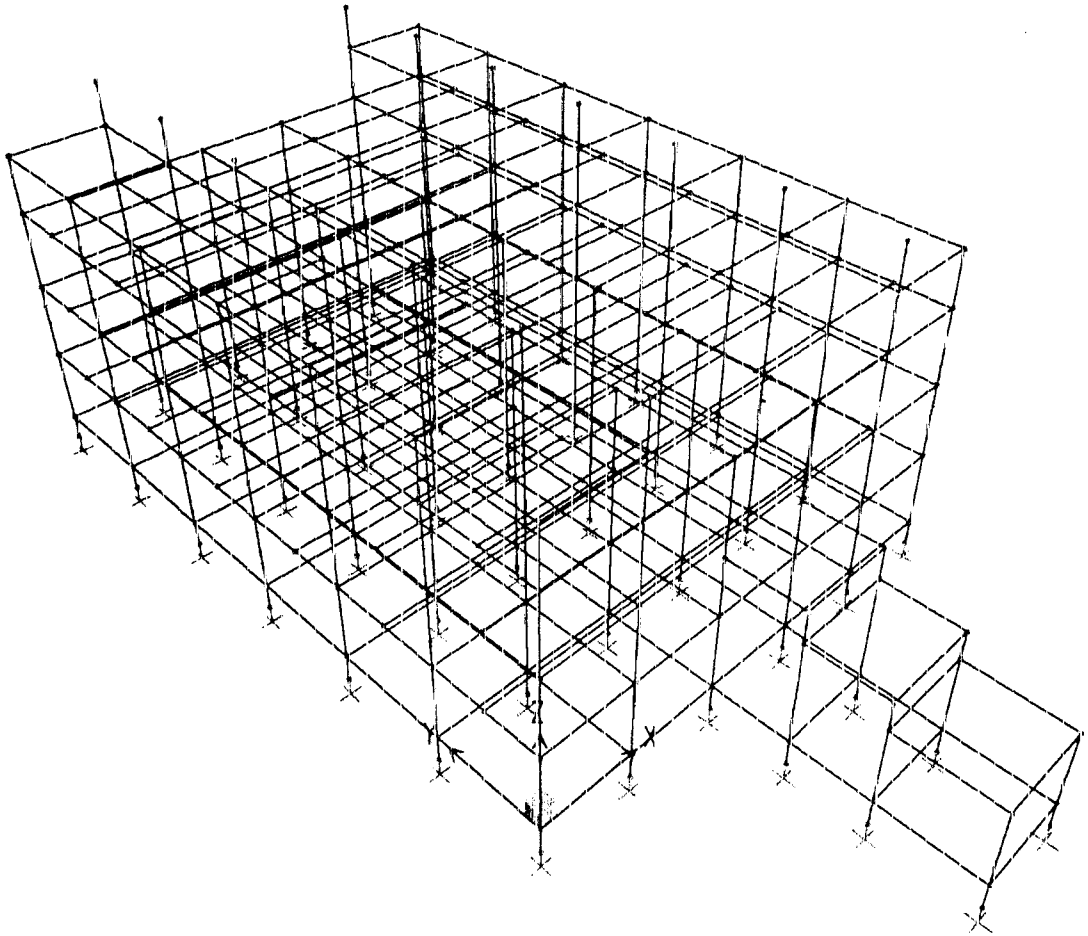

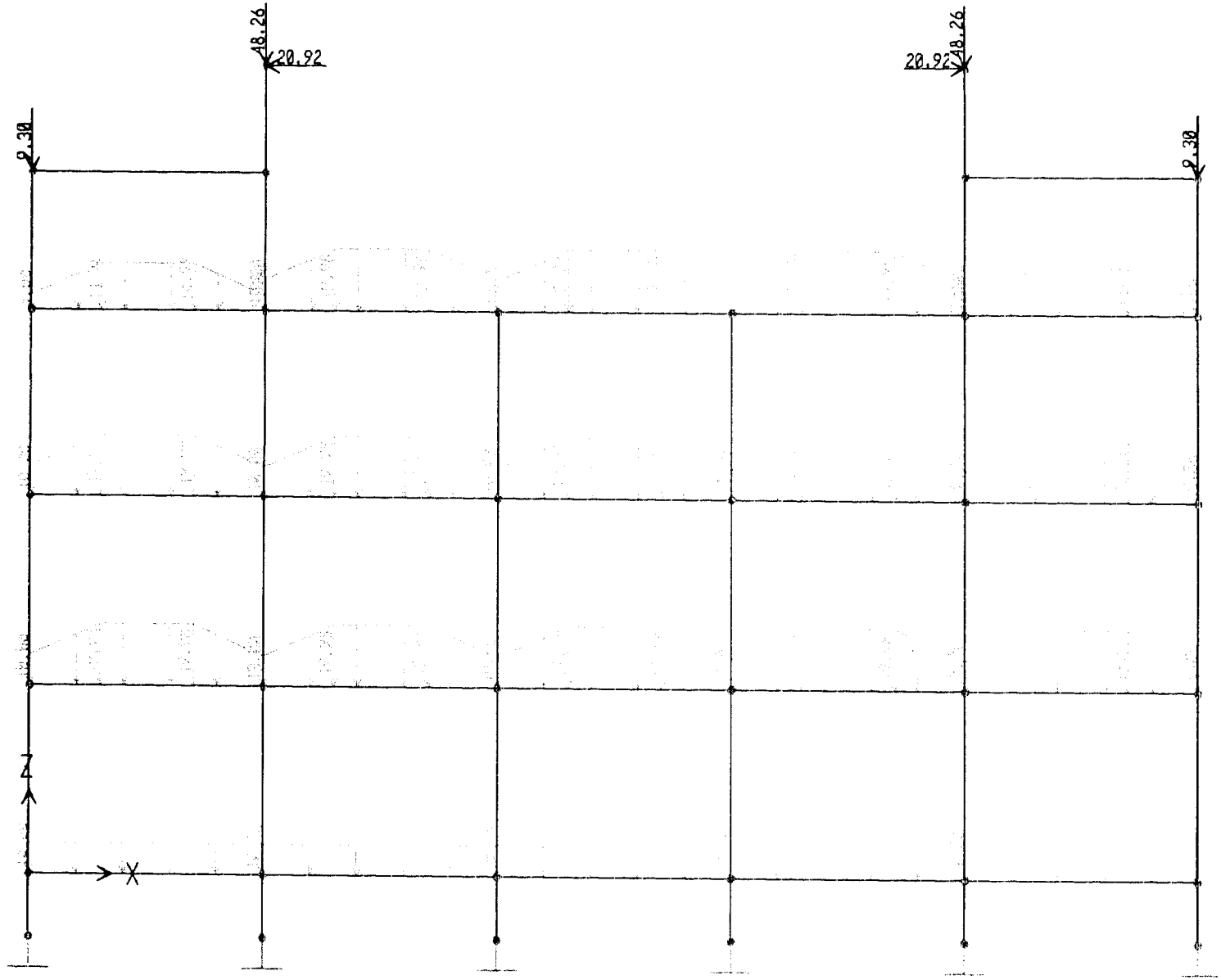
18.26
20.92
20.92
18.26
9.30
9.30
Z
X

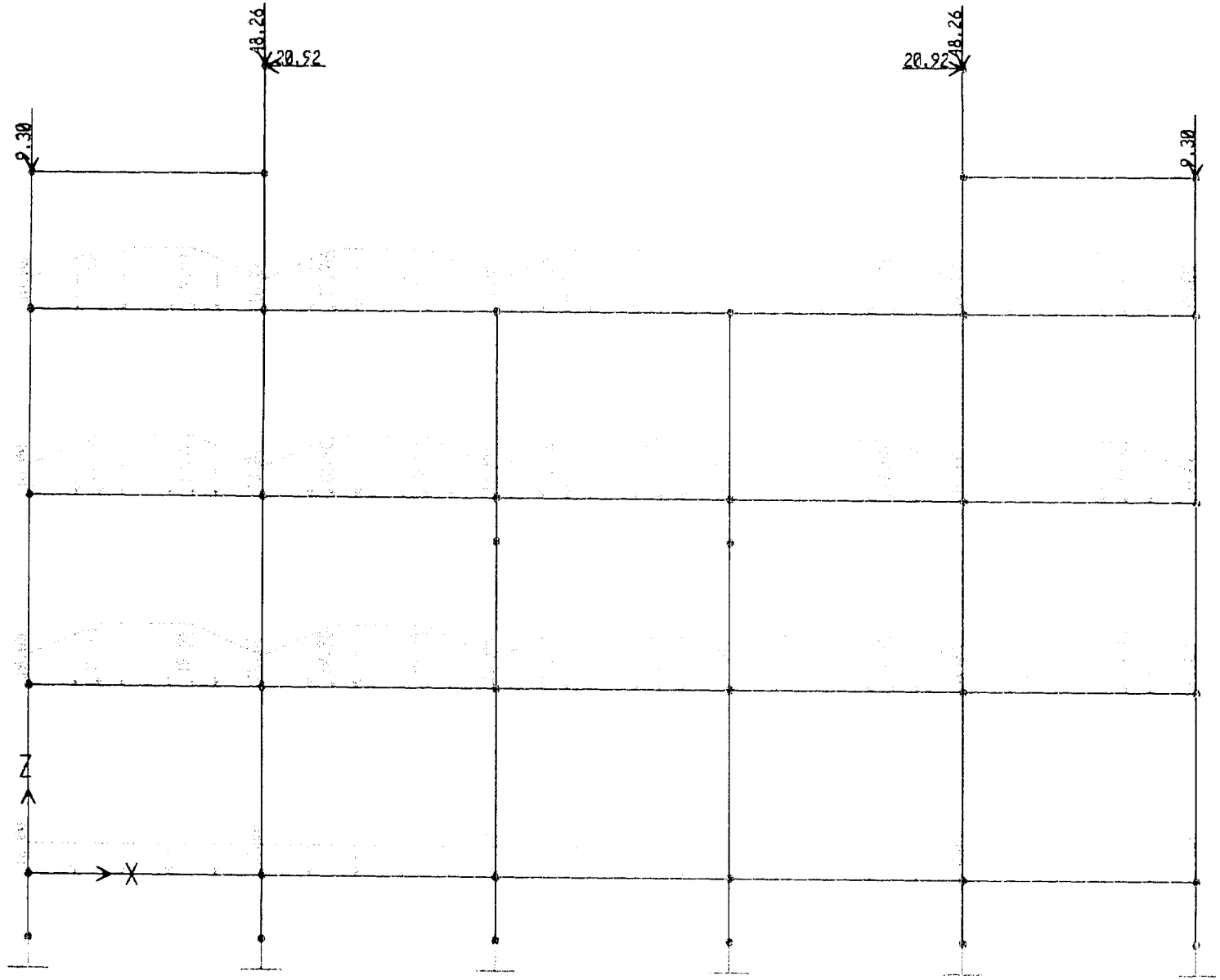
18.26
20.92
20.92
18.26
2.30
2.30
Z
X

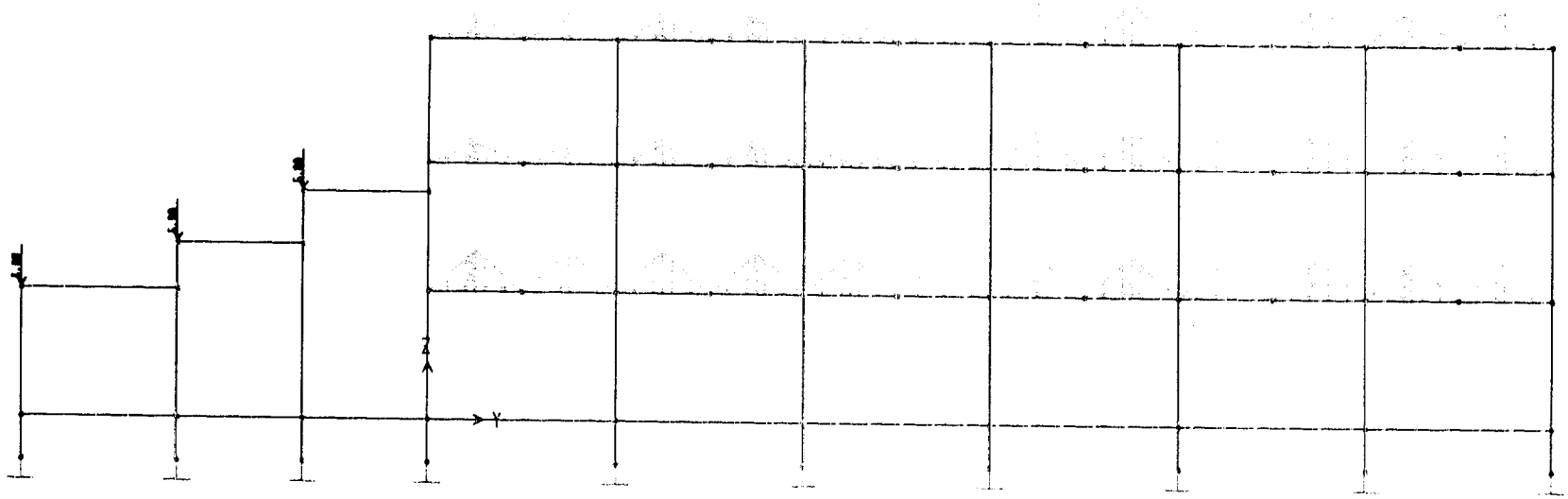
Z
Y

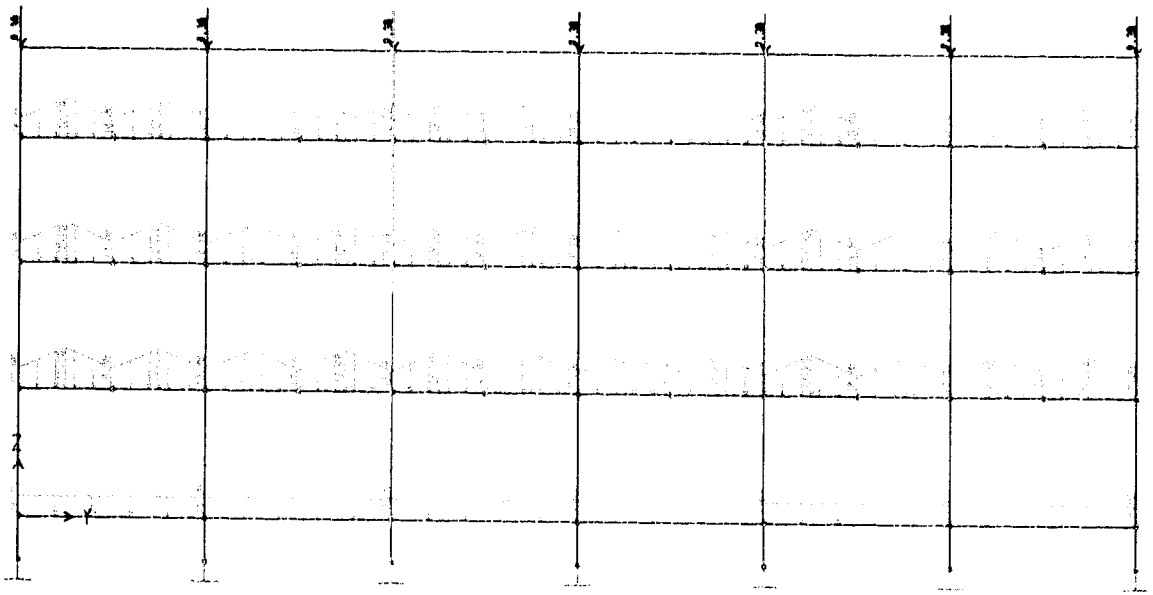

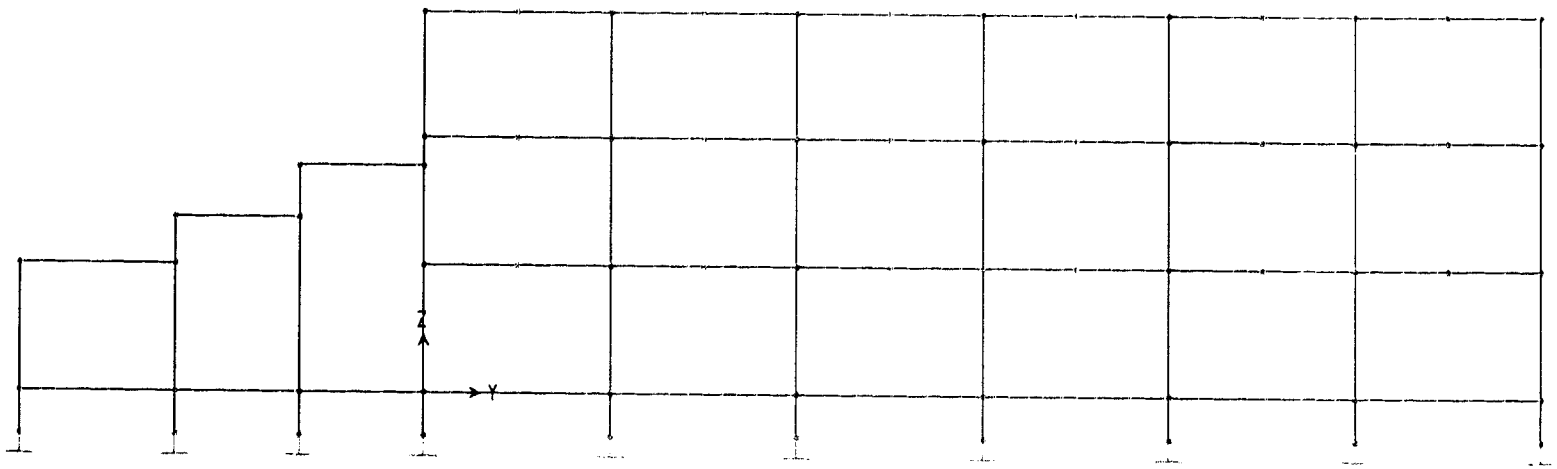
Z
Y

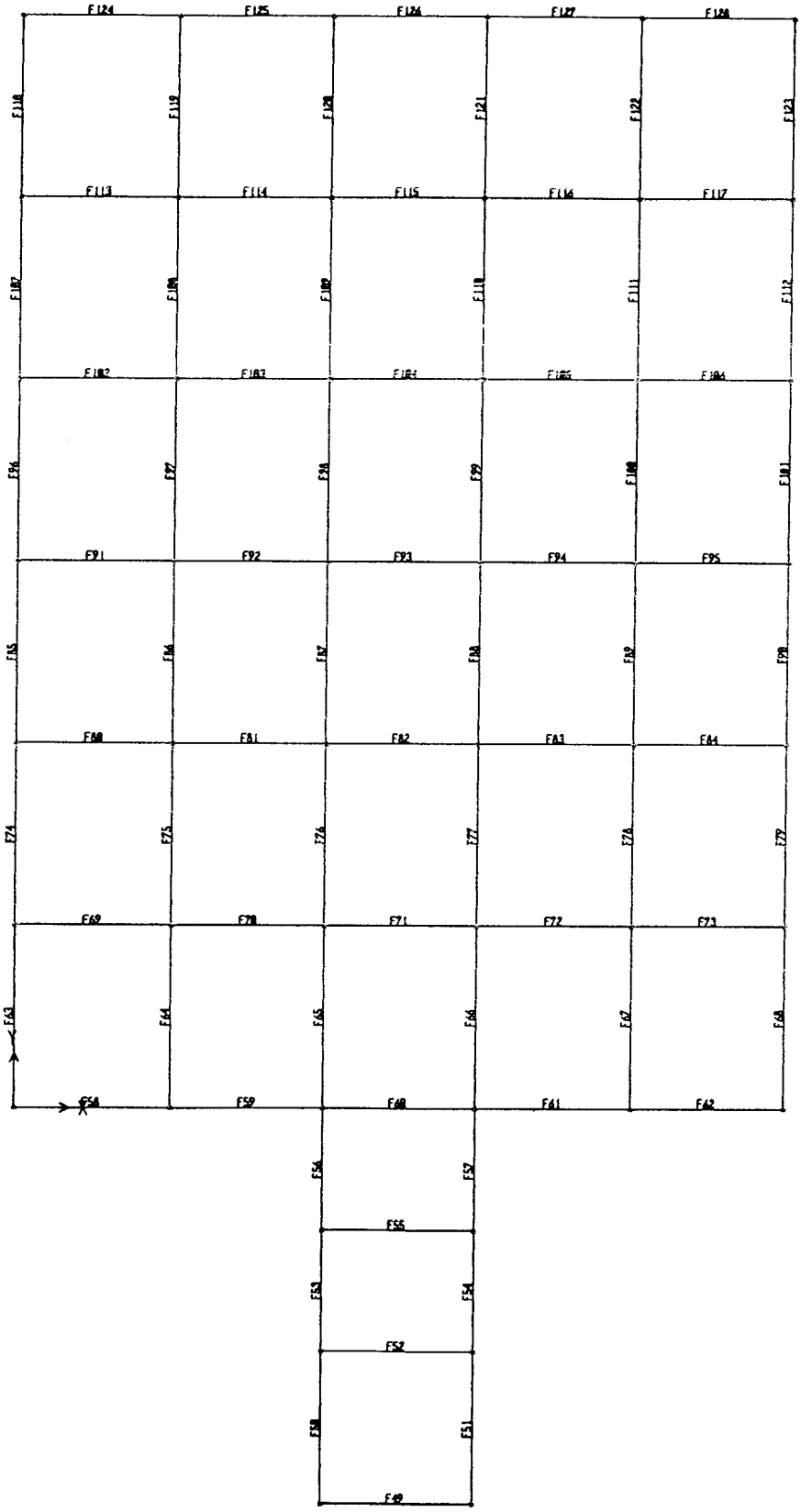

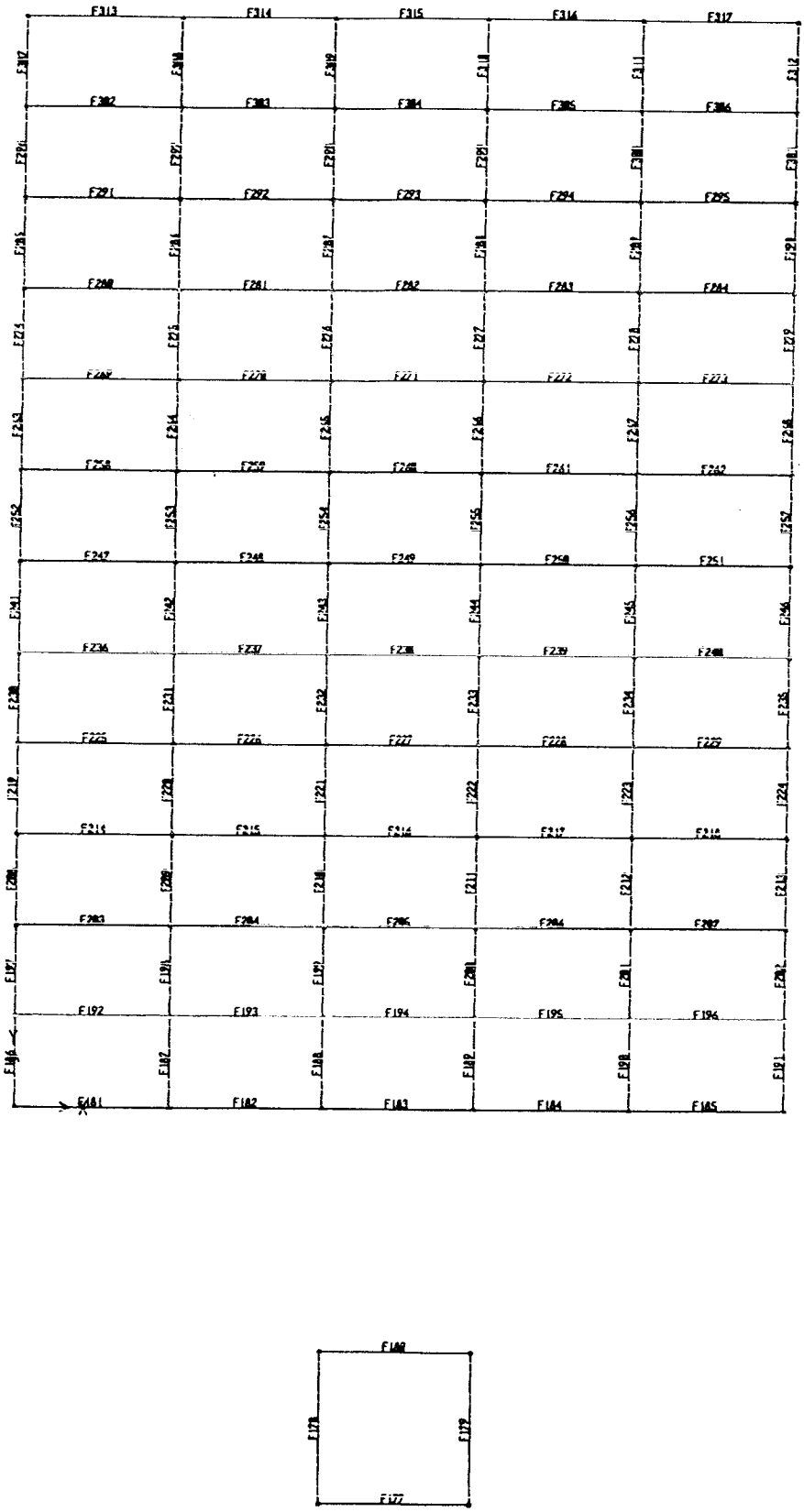

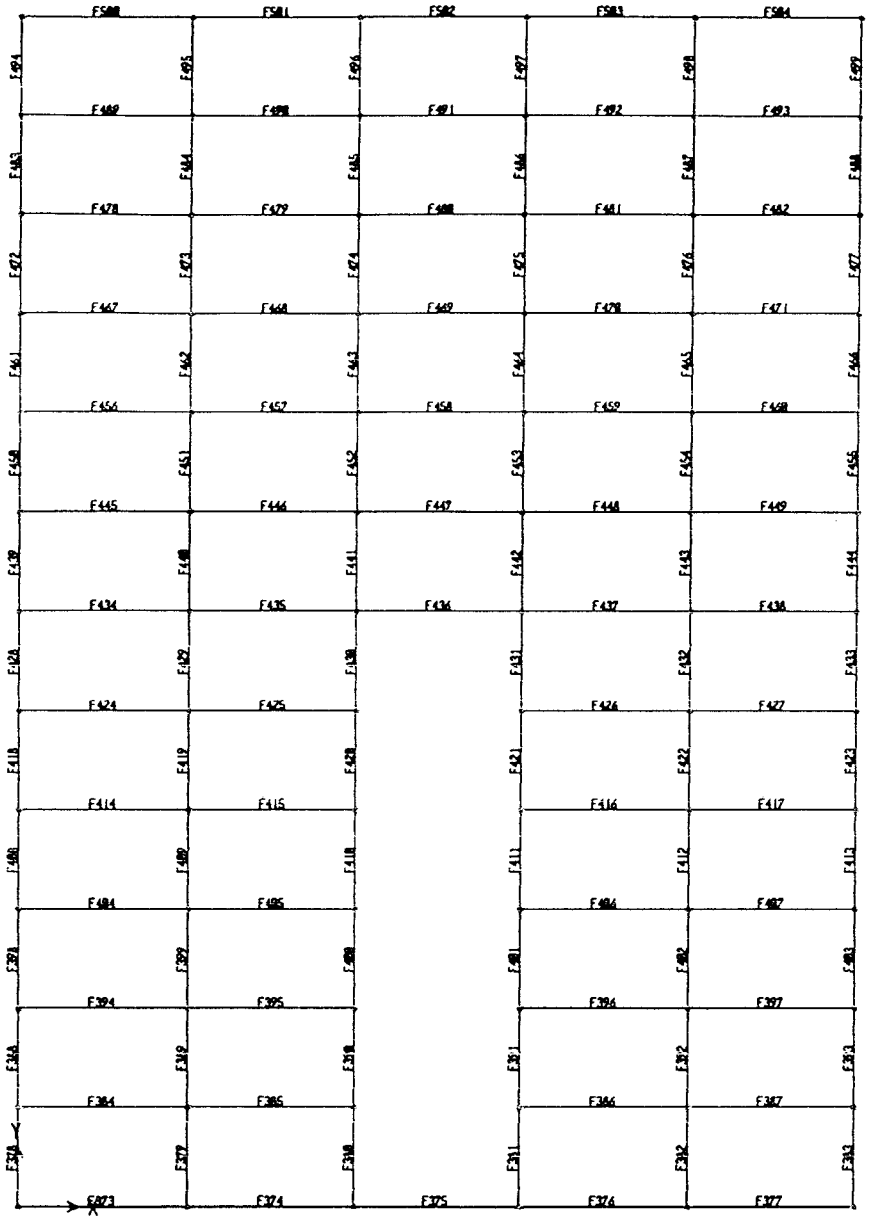

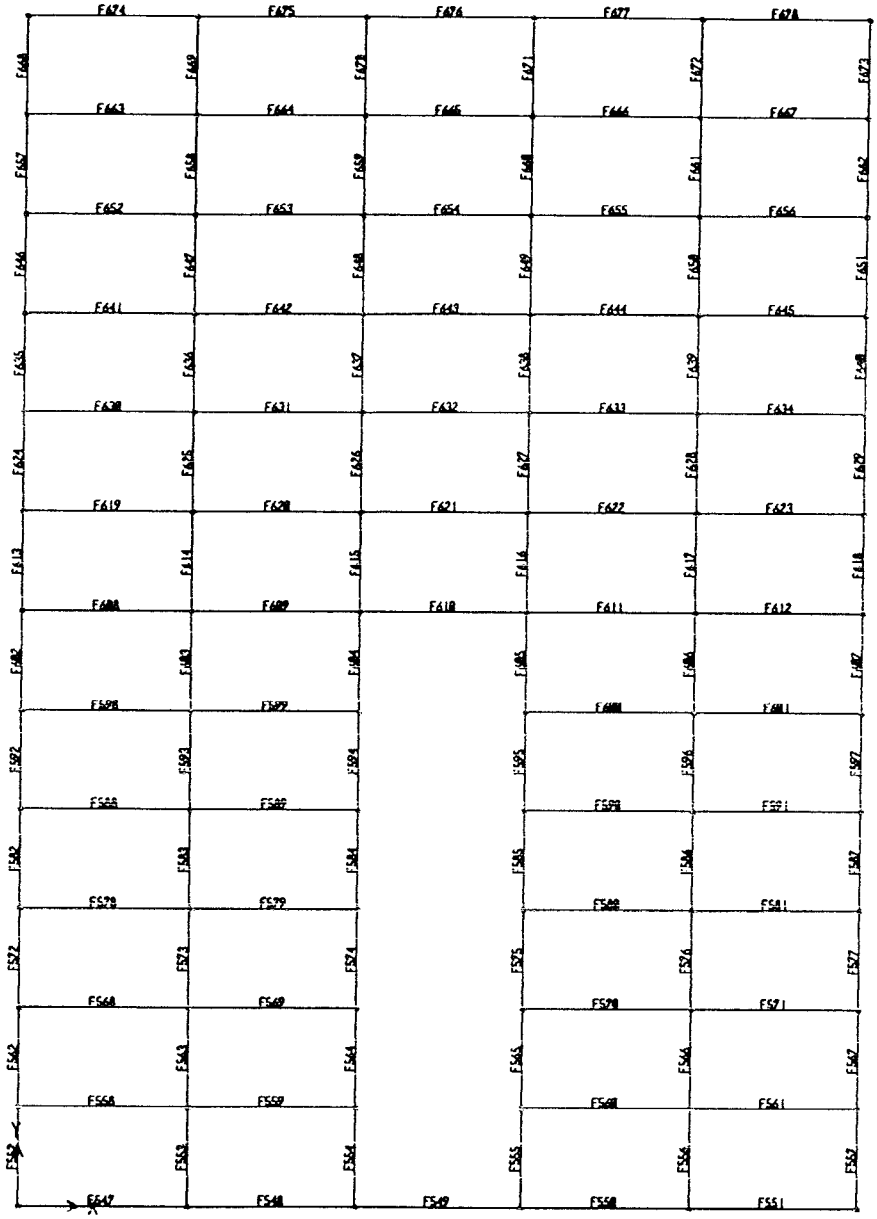

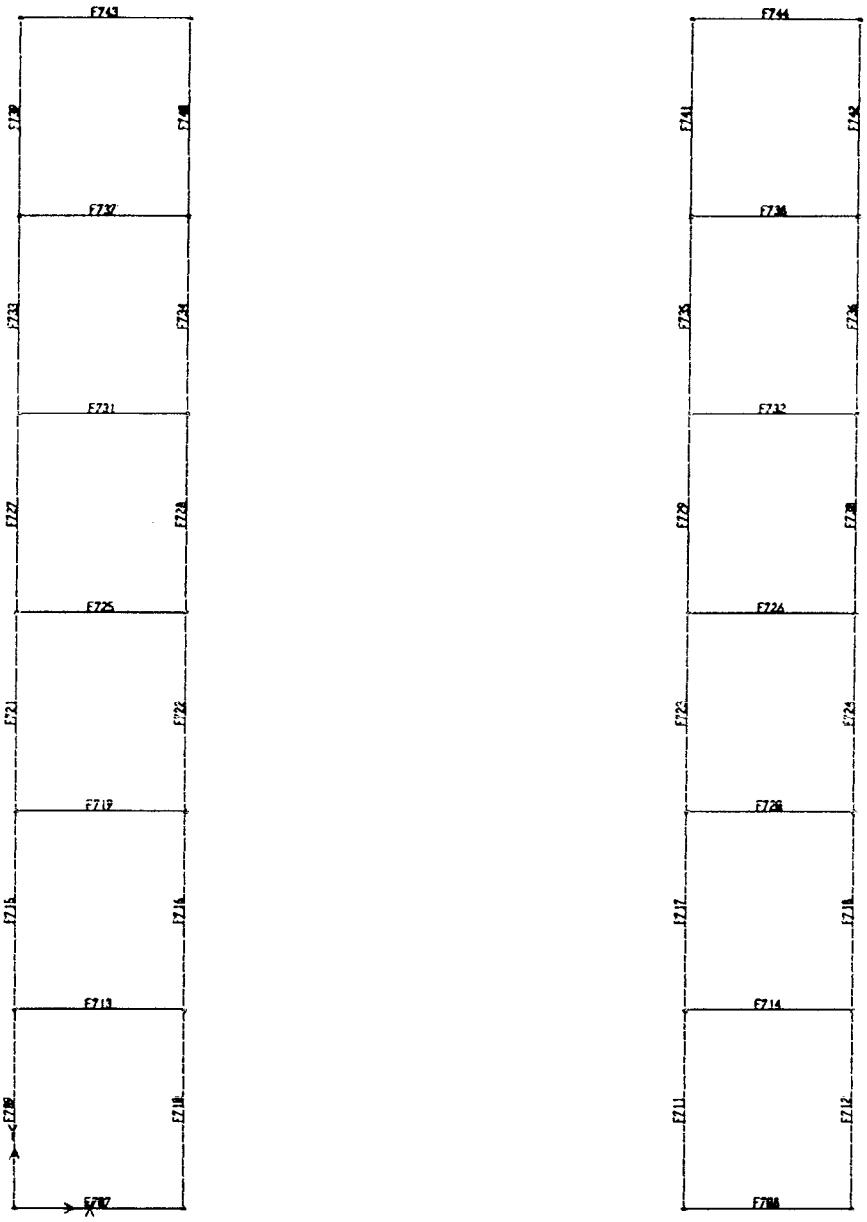
F743
F744
F732
F734
F731
F732
F725
F726
F719
F720
F713
F714
Y
X

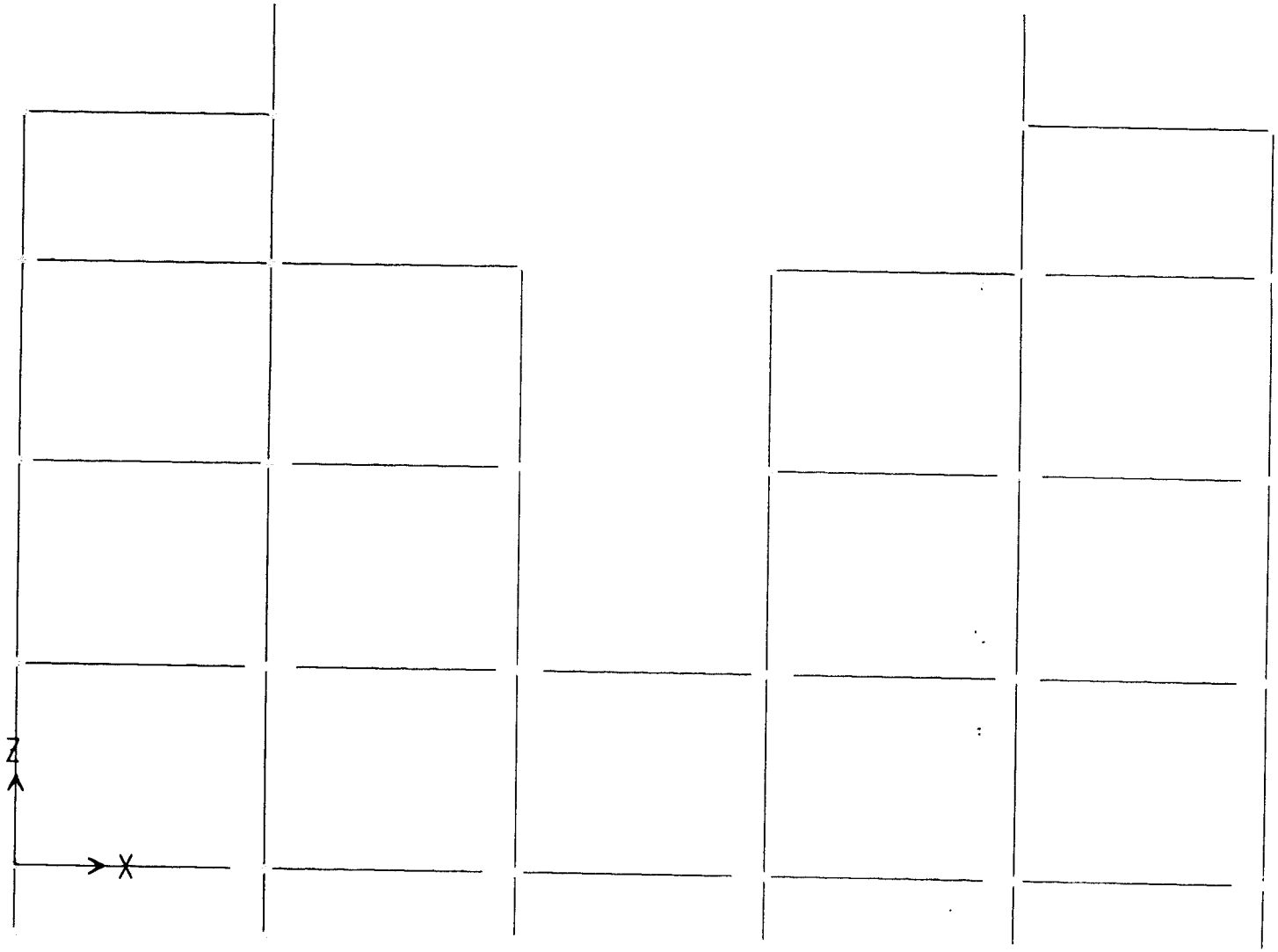
Z
X

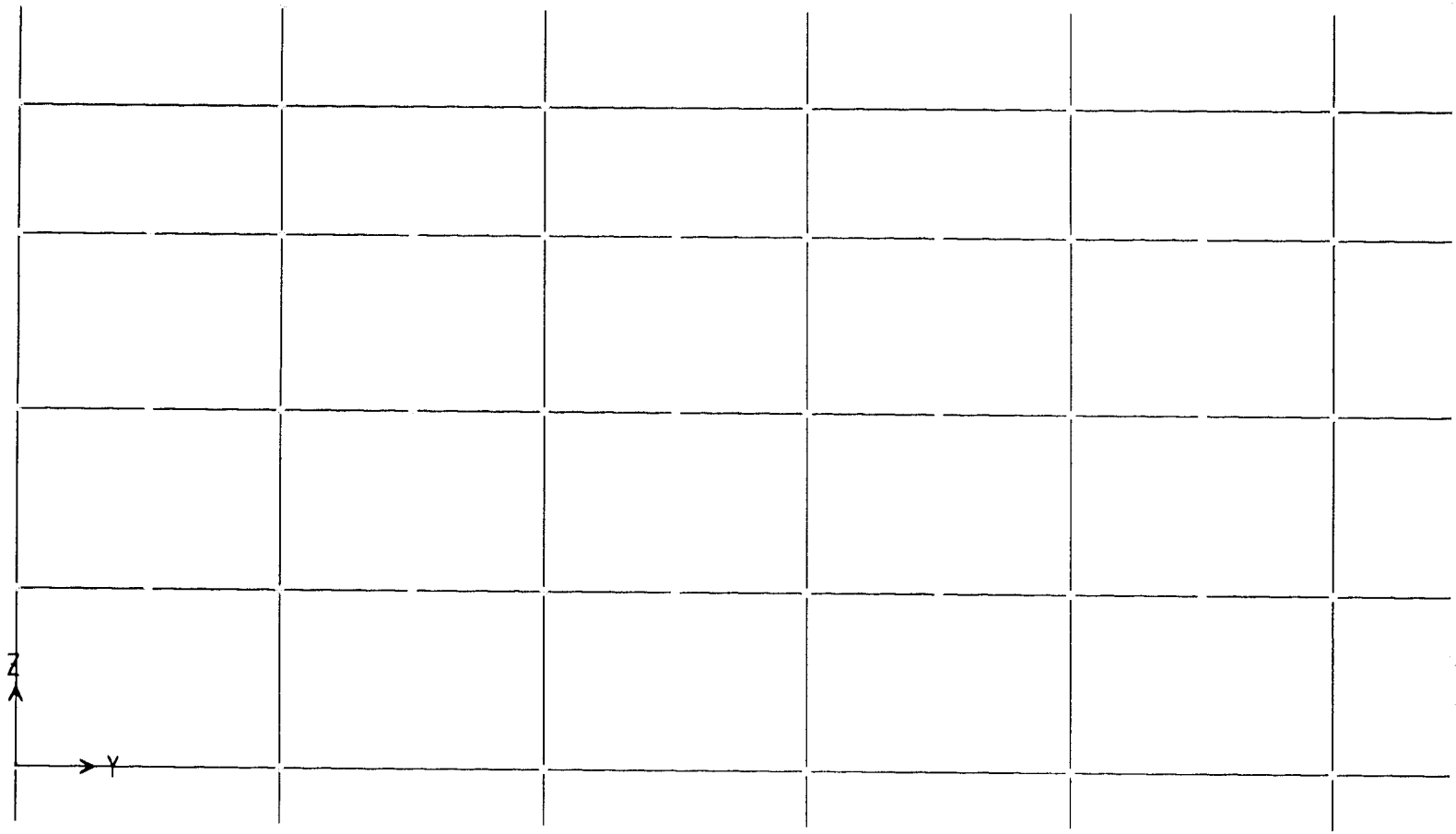
Z
Y

UII

S T A T I C L O A D C A S E S

STATIC CASE	CASE TYPE	SELF WT FACTOR
D	DEAD	1.0000
L	LIVE	0.0000
EX	QUAKE	0.0000
EY	QUAKE	0.0000

UII

M A T E R I A L P R O P E R T Y D A T A

MAT LABEL	MODULUS OF ELASTICITY	POISSON'S RATIO	THERMAL COEFF	WEIGHT PER UNIT VOL	MASS PER UNIT VOL
STEEL	199948979	0.300	6.500E-06	76.92	7.827
CONC	24821138.4	0.200	5.500E-06	23.562	2.401
OTHER	24821138.4	0.200	5.500E-06	23.561	2.401
BETON	22824058.0	0.200	5.500E-06	24.017	2.450

UII

M A T E R I A L D E S I G N D A T A

MAT LABEL	DESIGN CODE	STEEL FY	CONCRETE FC	REBAR FY	CONCRETE FCS	REBAR FYS
STEEL	S	248211.284				
CONC	C		27579.000	413685.500	27579.000	275790.300
OTHER	N					
BETON	C		22500.000	360000.000	22500.000	240000.000

UII

F R A M E S E C T I O N P R O P E R T Y D A T A

SECTION LABEL	MAT LABEL	SECTION TYPE	DEPTH	FLANGE WIDTH TOP	FLANGE THICK TOP	WEB THICK	FLANGE WIDTH BOTTOM	FLANGE THICK BOTTOM
FSEC1	STEEL		0.457	0.254	0.000	0.000	0.000	0.000
B30X55	BETON		0.550	0.300	0.000	0.000	0.000	0.000
B30X60	BETON		0.600	0.300	0.000	0.000	0.000	0.000
B30X45	BETON		0.450	0.300	0.000	0.000	0.000	0.000
B25X30	BETON		0.300	0.250	0.000	0.000	0.000	0.000
SLOOF	BETON		0.600	0.400	0.000	0.000	0.000	0.000
RB20X45	BETON		0.450	0.200	0.000	0.000	0.000	0.000
RB20X35	BETON		0.350	0.200	0.000	0.000	0.000	0.000
K40X40	BETON		0.400	0.400	0.000	0.000	0.000	0.000
K30X30	BETON		0.300	0.300	0.000	0.000	0.000	0.000

UII

UII

S H E L L S E C T I O N P R O P E R T Y D A T A

SECTION LABEL	TOTAL WEIGHT	TOTAL MASS
SSEC.	1.000	0.000

UII

G R O U P M A S S D A T A

GROUP	M-X	M-Y	M-Z
ALL	6.050	6.050	6.050

UII

J O I N T F O R C E S Load Case D

JOINT	GLOBAL-X	GLOBAL-Y	GLOBAL-Z	GLOBAL-XX	GLOBAL-YY	GLOBAL-ZZ
J347	0.000	0.000	-9.300	0.000	0.000	0.000
J351	0.000	0.000	-9.300	0.000	0.000	0.000
J355	0.000	0.000	-9.300	0.000	0.000	0.000
J359	0.000	0.000	-9.300	0.000	0.000	0.000
J363	0.000	0.000	-9.300	0.000	0.000	0.000
J367	0.000	0.000	-9.300	0.000	0.000	0.000
J371	-20.920	0.000	-48.260	0.000	0.000	0.000
J373	-20.920	0.000	-48.260	0.000	0.000	0.000
J375	-20.920	0.000	-48.260	0.000	0.000	0.000
J377	-20.920	0.000	-48.260	0.000	0.000	0.000
J379	-20.920	0.000	-48.260	0.000	0.000	0.000
J381	-20.920	0.000	-48.260	0.000	0.000	0.000
J383	-20.920	0.000	-48.260	0.000	0.000	0.000
J372	20.920	0.000	-48.260	0.000	0.000	0.000
J374	20.920	0.000	-48.260	0.000	0.000	0.000
J376	20.920	0.000	-48.260	0.000	0.000	0.000
J378	20.920	0.000	-48.260	0.000	0.000	0.000
J380	20.920	0.000	-48.260	0.000	0.000	0.000
J382	20.920	0.000	-48.260	0.000	0.000	0.000
J384	20.920	0.000	-48.260	0.000	0.000	0.000
J346	0.000	0.000	-9.300	0.000	0.000	0.000
J350	0.000	0.000	-9.300	0.000	0.000	0.000
J354	0.000	0.000	-9.300	0.000	0.000	0.000
J358	0.000	0.000	-9.300	0.000	0.000	0.000
J362	0.000	0.000	-9.300	0.000	0.000	0.000
J366	0.000	0.000	-9.300	0.000	0.000	0.000
J370	0.000	0.000	-9.300	0.000	0.000	0.000
J97	0.000	0.000	-5.000	0.000	0.000	0.000
J98	0.000	0.000	-5.000	0.000	0.000	0.000
J179	0.000	0.000	-5.000	0.000	0.000	0.000
J180	0.000	0.000	-5.000	0.000	0.000	0.000
J183	0.000	0.000	-5.000	0.000	0.000	0.000
J184	0.000	0.000	-5.000	0.000	0.000	0.000
J343	0.000	0.000	-9.300	0.000	0.000	0.000

J189	0.000	54.918	0.000	0.000	0.000	0.000
J267	0.000	77.838	0.000	0.000	0.000	0.000
J190	0.000	54.918	0.000	0.000	0.000	0.000
J268	0.000	77.838	0.000	0.000	0.000	0.000
J59	0.000	2.710	0.000	0.000	0.000	0.000
J105	0.000	29.970	0.000	0.000	0.000	0.000
J191	0.000	51.350	0.000	0.000	0.000	0.000
J269	0.000	74.270	0.000	0.000	0.000	0.000
J345	0.000	14.270	0.000	0.000	0.000	0.000
J60	0.000	2.710	0.000	0.000	0.000	0.000
J106	0.000	29.970	0.000	0.000	0.000	0.000
J192	0.000	51.350	0.000	0.000	0.000	0.000
J270	0.000	74.270	0.000	0.000	0.000	0.000
J346	0.000	14.270	0.000	0.000	0.000	0.000
J103	0.000	33.538	0.000	0.000	0.000	0.000
J57	0.000	6.228	0.000	0.000	0.000	0.000
J104	0.000	33.538	0.000	0.000	0.000	0.000
J58	0.000	6.278	0.000	0.000	0.000	0.000

JOINT	LOAD	F1	F2	F3	M1	M2	M3
J1	D	5.296845	4.532388	73.81141	-1.800014	1.980572	0.001883
J1	L	0.000659	0.258812	0.13886	-0.217913	0.000247	0.001126
J1	EX	-0.193913	-0.459649	-2.616663	0.81328	-0.339078	0.228784
J1	EY	1.7E-05	-8.886175	-35.63753	16.02179	-4.7E-06	-0.000984
J1	COMB1	6.357269	5.852964	88.79587	-2.508678	2.377081	0.004062
J1	COMB2	5.3612	1.565651	63.61166	3.929951	1.728731	0.238814
J1	COMB3	5.50083	-4.63474	39.30207	15.1204	1.972864	0.073366
J2	D	-5.299383	4.534799	73.82844	-1.804372	-1.984213	-0.000406
J2	L	0.000802	0.266172	0.16215	-0.228641	0.000305	0.000935
J2	EX	-0.193912	0.460675	2.628005	-0.817024	-0.339067	0.228532
J2	EY	-0.000235	-8.890788	-35.63796	16.0253	-0.00018	0.000841
J2	COMB1	-6.357976	5.867633	88.85357	-2.531072	-2.380567	0.001008
J2	COMB2	-5.764873	2.521583	69.06496	2.235739	-2.434319	0.236663
J2	COMB3	-5.625429	-4.344831	40.9789	14.60259	-2.190322	0.072739
J3	D	5.739389	-1.49361	109.0171	0.447118	2.112772	0.001031
J3	L	-0.014124	0.284404	-0.396875	-0.238156	-0.015362	0.000936
J3	EX	-3.818634	-1.288824	-9.055391	1.08248	-4.44579	0.286699
J3	EY	-0.00048	-24.98515	-3.923192	21.57761	-0.000565	0.00325
J3	COMB1	6.864668	-1.337285	130.1855	0.155493	2.510748	0.002735
J3	COMB2	2.069472	-10.68296	103.7348	8.311769	-2.387999	0.299135
J3	COMB3	4.818536	-28.11909	107.3711	23.39193	0.812554	0.0951
J4	D	-5.768083	-1.486469	109.0842	0.441233	-2.1459	0.000952
J4	L	-0.011859	0.299413	-0.342189	-0.251415	-0.014571	0.001483
J4	EX	-3.819288	1.294238	9.055375	-1.087607	-4.446124	0.287565
J4	EY	0.000408	-24.99118	-3.923289	21.58192	0.000509	-0.003345
J4	COMB1	-6.940673	-1.304702	130.3535	0.127215	-2.598394	0.003515
J4	COMB2	-10.01306	-7.999163	122.5671	6.05673	-6.859363	0.298042
J4	COMB3	-7.262869	-27.29953	113.1636	22.70252	-3.65778	0.088537
J5	D	5.678545	3.284308	120.1115	-1.464403	2.063475	0.003992
J5	L	-0.043063	0.989385	2.468981	-0.530238	-0.038115	0.002647
J5	EX	-8.005987	-0.935368	-23.45096	0.890524	-9.654117	0.650755
J5	EY	0.014088	-28.45405	-1.852791	22.51412	0.007138	-0.016111
J5	COMB1	6.745354	5.524187	148.0842	-2.605664	2.415185	0.009026
J5	COMB2	-2.332851	-6.170952	102.0394	6.308991	-7.83512	0.673482
J5	COMB3	3.441815	-26.41122	117.5623	22.21569	-0.878909	0.193097
J6	D	-5.732993	3.287522	120.2829	-1.468411	-2.12985	-0.000364
J6	L	-0.005279	1.018155	2.680095	-0.548474	-0.024069	0.00084
J6	EX	-8.011467	0.942995	23.45864	-0.896197	-9.655833	0.646711
J6	EY	-0.014062	-28.46146	-1.853184	22.51942	-0.007111	0.015988
J6	COMB1	-6.888038	5.574074	148.6277	-2.639652	-2.59433	0.000907
J6	COMB2	-14.3176	-4.216743	150.8372	4.451452	-12.23995	0.674265
J6	COMB3	-8.559683	-25.81487	132.5849	21.64849	-5.292978	0.220383
J7	D	10.59883	15.48458	529.9697	-5.496253	3.879455	0.038457
J7	L	-0.223243	-0.353325	51.16485	-0.080317	0.029902	0.010175
J7	EX	-14.51796	-0.263485	-63.86986	0.411714	-19.79976	0.064935
J7	EY	-0.013478	-14.8126	-49.77298	20.70174	0.00052	0.026882
J7	COMB1	12.36141	18.01618	717.8274	-6.724011	4.703189	0.062429
J7	COMB2	-3.971885	11.20884	490.8013	1.150807	-16.40974	0.119261
J7	COMB3	6.471139	0.511288	500.2045	16.07015	-2.153531	0.092266
J8	D	-1.338459	4.514851	745.8044	-2.518843	-0.658914	0.019463
J8	L	0.460538	-0.560005	111.7878	-0.219189	0.217158	-0.002643
J8	EX	-27.6789	-0.328419	11.12239	0.39073	-24.61574	-0.027826
J8	EY	0.156629	-14.5873	-47.06438	19.90019	0.064362	0.13525
J8	COMB1	-0.869289	4.521812	1073.826	-3.373313	-0.443244	0.019128

J8	COMB2	-29.85863	-0.37072	814.9943	3.959136	-26.08047	0.033407
J8	COMB3	-9.814704	-10.85592	772.3938	18.30445	-8.309834	0.152851
J9	D	-0.428547	2.213852	614.2078	-1.209546	-0.230812	-0.024119
J9	L	-0.225084	-0.299941	79.91119	-0.080424	-0.096175	-0.008742
J9	EX	-25.92521	-1.0877	0.277287	0.860357	-23.7641	0.311868
J9	EY	0.148909	-22.52693	-2.997899	20.49804	0.057916	0.076457
J9	COMB1	-0.87439	2.176716	864.9073	-1.580134	-0.430854	-0.04293
J9	COMB2	-27.30656	-5.99169	669.4329	6.051994	-24.85025	0.318788
J9	COMB3	-8.530962	-21.76584	667.0298	20.49859	-7.697526	0.150439
J10	D	0.27572	2.21478	613.8823	-1.212025	0.097058	0.025104
J10	L	0.160232	-0.304546	81.79322	-0.085881	-0.002124	0.013353
J10	EX	-25.81263	1.095977	0.134926	-0.866113	-23.66129	0.310095
J10	EY	-0.148808	-22.53648	-2.99723	20.50493	-0.057842	-0.076536
J10	COMB1	0.587235	2.170463	867.5279	-1.59184	0.113071	0.05149
J10	COMB2	-26.42296	-3.735067	669.5367	4.262948	-24.40641	0.327405
J10	COMB3	-7.947247	-21.08848	667.2366	19.95767	-7.412798	0.047882
J11	D	1.312386	4.471791	747.0909	-2.518365	0.573097	-0.012202
J11	L	-0.47764	-0.767764	140.0593	-0.296697	-0.297186	0.010914
J11	EX	-27.30273	0.321905	-10.54515	-0.384929	-24.2915	-0.02548
J11	EY	-0.156541	-14.58751	-47.06445	19.90039	-0.064296	-0.135116
J11	COMB1	0.81064	4.137727	1120.604	-3.496753	0.212218	0.002821
J11	COMB2	-27.08009	0.191641	802.8246	3.132479	-24.65382	-0.078307
J11	COMB3	-7.53718	-10.76195	775.8247	18.03641	-7.211195	-0.159272
J12	D	-10.52445	15.20628	572.0261	-5.616422	-3.927445	-0.027501
J12	L	0.193325	-0.677649	96.29827	-0.20346	-0.115206	-0.006621
J12	EX	-14.26296	0.265269	62.85643	-0.411389	-19.40136	0.098906
J12	EY	0.013546	-14.81257	-49.77303	20.70173	-0.000465	-0.026902
J12	COMB1	-12.32002	17.1633	840.5085	-7.065242	-4.897263	-0.043594
J12	COMB2	-25.74767	11.36173	680.3392	0.133926	-24.24066	0.062932
J12	COMB3	-15.46838	0.283491	598.4995	15.6459	-10.27202	-0.028053
J13	D	3.117077	-2.031012	801.9386	1.082053	1.603932	-0.0025
J13	L	-0.277305	0.720256	109.3361	-0.383186	0.152725	-0.000316
J13	EX	-16.1045	-0.613074	-67.92973	0.531401	-21.6955	0.134019
J13	EY	-0.006068	-27.58176	8.868402	25.29123	0.000168	0.019101
J13	COMB1	3.296804	-1.284805	1137.264	0.685367	2.169078	-0.003506
J13	COMB2	-13.48449	-11.22847	808.9627	9.532189	-20.72255	0.142002
J13	COMB3	-1.893709	-31.05964	864.3904	27.73863	-5.101668	0.059548
J14	D	0.488292	1.858263	969.2817	-1.081805	0.350465	0.001784
J14	L	0.90587	1.397967	237.4059	-0.755709	0.46474	-0.002128
J14	EX	-30.4522	-0.484276	9.804008	0.44393	-26.96802	0.082842
J14	EY	0.001137	-26.10121	8.738157	24.04113	0.001719	0.068102
J14	COMB1	2.035342	4.466662	1542.987	-2.507301	1.164142	-0.001264
J14	COMB2	-30.71961	-6.331571	1105.428	6.658482	-27.39698	0.108396
J14	COMB3	-8.793192	-25.16728	1104.792	24.00908	-7.978741	0.098805
J15	D	-1.49315	0.748436	635.8317	-0.351676	-0.530759	-0.014444
J15	L	-0.569205	0.695424	148.5305	-0.32419	-0.19723	-0.004862
J15	EX	-28.41492	-0.708701	25.04735	0.633715	-26.04753	0.082411
J15	EY	-0.008276	-19.83907	8.19784	19.74608	-0.002417	0.056547
J15	COMB1	-2.702507	2.010802	1000.647	-0.940716	-0.952479	-0.025111
J15	COMB2	-31.15916	-5.977896	742.9167	6.404529	-27.57938	0.08641
J15	COMB3	-10.7065	-20.04935	730.9081	20.46162	-8.826934	0.068636
J16	D	1.305931	0.751556	634.7826	-0.354601	0.376319	0.014741
J16	L	0.575115	0.722372	152.1441	-0.338719	0.121153	0.006853
J16	EX	-28.2857	0.713541	-24.59807	-0.638245	-25.94081	0.081492
J16	EY	0.008279	-19.84518	8.197948	19.75051	0.00242	-0.056603

J16	COMB1	2.487302	2.057662	1005.17	-0.967471	0.645428	0.028655
J16	COMB2	-27.72071	-4.496036	691.5704	5.081799	-26.41468	0.084152
J16	COMB3	-7.348915	-19.59599	715.3066	20.05796	-7.735516	-0.016125
J17	D	-0.402904	1.914689	972.4443	-1.113019	-0.401758	0.001201
J17	L	-0.797847	1.873423	298.8481	-1.023463	-0.50118	0.005129
J17	EX	-30.07124	0.479799	-9.398713	-0.440096	-26.64609	0.080367
J17	EY	-0.001138	-26.10148	8.738176	24.04135	-0.001719	-0.068047
J17	COMB1	-1.760039	5.295104	1645.09	-2.973163	-1.283999	0.009647
J17	COMB2	-31.79846	-5.124822	1108.229	5.626464	-28.15896	0.064622
J17	COMB3	-10.148	-24.65487	1121.418	23.61372	-8.975039	-0.043257
J18	D	-2.897581	-1.352506	892.2286	0.69804	-1.605258	0.005783
J18	L	0.28388	1.468539	206.4834	-0.804825	-0.227969	0.001702
J18	EX	-15.87901	0.608801	67.0758	-0.527498	-21.31251	0.12723
J18	EY	0.006067	-27.58175	8.868397	25.29122	-0.000167	-0.019102
J18	COMB1	-3.022888	0.726655	1401.048	-0.450072	-2.29106	0.009664
J18	COMB2	-19.3859	-9.015683	1074.099	7.900198	-23.81583	0.132275
J18	COMB3	-7.948556	-29.7266	1032.323	26.86905	-8.470947	0.026629
J19	D	2.812224	-0.397773	782.0891	0.298632	1.515507	0.012538
J19	L	-0.308675	0.055315	106.8493	-0.05969	0.141913	0.002701
J19	EX	-18.16063	-0.499085	-70.39054	0.47046	-24.70491	0.023724
J19	EY	-0.001027	-25.60118	-0.597417	24.30578	0.001359	0.019916
J19	COMB1	2.880788	-0.388824	1109.466	0.262855	2.045669	0.019367
J19	COMB2	-15.94097	-8.98116	781.8087	8.438008	-23.93316	0.044844
J19	COMB3	-2.866074	-27.43868	832.0508	25.96403	-6.144633	0.0424
J20	D	0.618405	0.19975	947.5472	-0.209893	0.41452	0.000273
J20	L	0.916205	0.131318	233.2496	-0.135697	0.467438	-0.001277
J20	EX	-34.83146	-0.45458	10.37887	0.429341	-30.78721	0.00998
J20	EY	0.003418	-24.40912	-0.509728	23.18777	0.00245	0.06532
J20	COMB1	2.208014	0.449808	1510.256	-0.468988	1.245325	-0.001716
J20	COMB2	-35.11155	-7.908262	1078.98	7.485384	-31.2815	0.030789
J20	COMB3	-10.03039	-25.52167	1071.132	24.21927	-9.112907	0.071614
J21	D	-1.524692	-0.094138	613.6182	0.131616	-0.540471	-0.003835
J21	L	-0.582032	-0.068658	143.6957	0.053805	-0.205009	-0.002924
J21	EX	-32.43149	-0.705049	24.44705	0.577955	-29.64641	0.032933
J21	EY	-0.002884	-21.17649	-0.325103	20.39302	-0.000631	0.048404
J21	COMB1	-2.760881	-0.222819	966.2549	0.244027	-0.97658	-0.009281
J21	COMB2	-35.35177	-7.520794	714.7635	7.177131	-31.31631	0.044386
J21	COMB3	-12.00321	-22.57788	696.9227	21.74988	-9.971354	0.056251
J22	D	1.321852	-0.090313	612.5399	0.12863	0.371982	0.004323
J22	L	0.571084	-0.068408	147.0951	0.051631	0.114992	0.004299
J22	EX	-32.24036	0.709973	-23.86286	-0.582521	-29.4619	0.032481
J22	EY	0.002885	-21.18046	-0.325006	20.39591	0.000632	-0.048442
J22	COMB1	2.499957	-0.217829	970.4	0.236966	0.630365	0.012066
J22	COMB2	-31.80002	-6.053401	664.7014	5.973127	-30.06606	0.024251
J22	COMB3	-8.584846	-22.13222	681.6437	21.38354	-8.85303	-0.03474
J23	D	-0.552427	0.205006	950.4774	-0.217299	-0.481415	0.001489
J23	L	-0.825974	0.199378	293.017	-0.202069	-0.518201	0.003226
J23	EX	-34.27916	0.452222	-9.800921	-0.427142	-30.24247	0.009674
J23	EY	-0.003419	-24.40935	-0.509725	23.18796	-0.002451	-0.065281
J23	COMB1	-1.984471	0.565013	1609.4	-0.58407	-1.40682	0.006949
J23	COMB2	-36.32024	-6.942834	1079.997	6.570297	-31.97045	-0.007971
J23	COMB3	-11.64176	-25.20931	1086.679	23.92099	-10.19767	-0.062918
J24	D	-2.603245	-0.294402	870.1183	0.200045	-1.529119	-0.010155
J24	L	0.305763	0.164022	201.4532	-0.164984	-0.228311	-0.001321
J24	EX	-18.33966	0.493661	69.22746	-0.465292	-24.24651	0.02406

J24	EY	0.001026	-25.60117	-0.597417	24.30578	-0.00136	-0.019918
J24	COMB1	-2.634674	-0.090848	1366.467	-0.02392	-2.20024	-0.014299
J24	COMB2	-21.61832	-7.810885	1048.544	7.332821	-26.77306	0.007549
J24	COMB3	-8.413008	-26.98318	998.2613	25.53258	-9.316572	-0.024413
J25	D	2.697909	-0.060779	776.8823	0.049943	1.533653	-0.000836
J25	L	-0.359419	-0.039683	107.0299	0.038118	0.095881	0.000384
J25	EX	-16.76188	-0.463009	-68.59524	0.44125	-22.60509	-0.085749
J25	EY	-0.000913	-25.49497	0.152054	24.13926	-0.000445	0.020078
J25	COMB1	2.662421	-0.136429	1103.507	0.12092	1.993794	-0.000388
J25	COMB2	-14.62924	-8.586449	778.4927	8.125007	-21.75587	-0.083182
J25	COMB3	-2.561362	-26.99189	827.993	25.54966	-5.480532	-0.006685
J26	D	1.074843	-0.155221	941.5154	0.142287	0.631787	-0.006925
J26	L	0.983054	-0.066394	231.1606	0.059565	0.470703	-0.002074
J26	EX	-31.74992	-0.454165	13.21244	0.428126	-28.11241	-0.050705
J26	EY	-0.000425	-24.30375	0.161042	23.03535	-0.000354	0.059697
J26	COMB1	2.862699	-0.292495	1499.676	0.266048	1.511268	-0.011628
J26	COMB2	-31.42306	-8.309638	1075.132	7.867412	-28.28481	-0.0416
J26	COMB3	-8.563424	-25.8459	1065.738	24.49014	-8.044135	0.038785
J27	D	-0.715035	0.057756	784.7755	0.2575	-0.228178	-0.00365
J27	L	-0.277141	-0.062072	197.5432	0.143658	-0.106199	-0.002001
J27	EX	-29.58587	-0.60195	1.346181	0.504018	-27.11945	-0.037021
J27	EY	-0.000456	-21.44668	0.190763	20.59196	-0.000298	0.042869
J27	COMB1	-1.301467	-0.030007	1257.8	0.538852	-0.443732	-0.007582
J27	COMB2	-31.4596	-7.33763	887.6937	7.323753	-28.34176	-0.029276
J27	COMB3	-10.15811	-22.66753	886.8647	22.09595	-8.815978	0.028888
J28	D	0.497824	0.06176	784.1097	0.254524	0.04676	0.003851
J28	L	0.2449	-0.067163	200.7913	0.145822	-0.001576	0.002194
J28	EX	-29.47686	0.606409	-0.941907	-0.508443	-27.01946	-0.03517
J28	EY	0.000455	-21.4493	0.190821	20.59388	0.000297	-0.042894
J28	COMB1	0.989229	-0.033349	1262.198	0.538745	0.053591	0.008131
J28	COMB2	-29.90854	-6.085207	885.6497	6.274016	-27.91645	-0.045179
J28	COMB3	-8.684873	-22.28706	886.4681	21.77659	-8.462217	-0.051383
J29	D	-1.024407	-0.153006	944.4053	0.140155	-0.712386	0.007049
J29	L	-0.910321	-0.066895	290.8003	0.059464	-0.538227	0.002281
J29	EX	-31.3724	0.453079	-12.63457	-0.427178	-27.79209	-0.048192
J29	EY	0.000422	-24.30395	0.161045	23.03551	0.000352	-0.059671
J29	COMB1	-2.685802	-0.290639	1598.567	0.263328	-1.716027	0.012107
J29	COMB2	-33.83268	-7.368536	1070.202	6.979949	-29.68225	-0.060556
J29	COMB3	-11.24424	-25.55816	1079.417	24.21862	-9.671687	-0.069716
J30	D	-2.496728	-0.057803	865.0176	0.04712	-1.558165	0.001052
J30	L	0.346293	-0.038704	201.753	0.037177	-0.196478	-6.8E-05
J30	EX	-16.51994	0.45664	67.61327	-0.434914	-22.21795	-0.081599
J30	EY	0.000912	-25.49497	0.152058	24.13926	0.000444	-0.020079
J30	COMB1	-2.442005	-0.131291	1360.826	0.116028	-2.184162	0.001153
J30	COMB2	-19.61034	-7.63118	1041.848	7.214918	-24.6934	-0.089696
J30	COMB3	-7.715307	-26.69876	993.2785	25.27041	-8.696152	-0.045703
J31	D	2.652281	0.293892	774.5894	-0.205726	1.514184	-0.013575
J31	L	-0.377426	-0.139531	106.8878	0.137934	0.086659	-0.002362
J31	EX	-16.26039	-0.449759	-67.5164	0.428432	-21.93729	-0.00902
J31	EY	-0.000788	-25.30923	0.8288	24.03004	-0.000532	0.020335
J31	COMB1	2.578855	0.129421	1100.528	-0.026177	1.955676	-0.020069
J31	COMB2	-14.16375	-8.173272	777.3701	7.840328	-21.08807	-0.017928
J31	COMB3	-2.456846	-26.45173	826.5911	25.19394	-5.293613	0.003513
J32	D	1.266325	-0.521979	937.3905	0.499589	0.702603	-0.013804
J32	L	1.050588	-0.275742	229.9632	0.260131	0.494661	-0.003311

J40	L	0.116781	-1.654811	233.1609	0.979808	-0.043826	-0.00097
J40	EX	-28.41045	0.484899	0.622536	-0.431461	-26.05685	0.011478
J40	EY	-0.002389	-23.41415	-7.750374	21.56276	-0.001407	-0.036259
J40	COMB1	0.32616	-5.858426	1431.085	3.62026	-0.171198	-0.000742
J40	COMB2	-29.24688	-10.20424	997.4227	8.450343	-27.07153	0.000862
J40	COMB3	-8.793117	-27.76277	991.278	24.60962	-8.31163	-0.034053
J41	D	-1.061876	-2.253247	961.4326	1.409446	-0.702673	0.013164
J41	L	-0.956314	-1.942787	296.4436	1.121132	-0.548329	0.001079
J41	EX	-30.21086	0.500291	-12.83872	-0.448184	-26.79003	-0.004677
J41	EY	-0.00493	-25.72782	-8.184209	23.61163	-0.002936	-0.053196
J41	COMB1	-2.804354	-5.812356	1628.029	3.485146	-1.720534	0.017523
J41	COMB2	-32.686	-10.56435	1087.018	8.806869	-28.63913	-0.007435
J41	COMB3	-10.93781	-29.8345	1090.246	26.48411	-9.352471	-0.043167
J42	D	-2.745135	1.251488	884.2438	-0.609905	-1.615742	-0.001533
J42	L	0.35575	-1.509744	206.9516	0.86583	-0.183941	0.000729
J42	EX	-15.92539	0.414041	66.72767	-0.402655	-21.42512	-0.00375
J42	EY	-0.004523	-26.94369	-8.470894	24.71737	-0.002884	-0.019058
J42	COMB1	-2.724962	-0.913804	1392.215	0.653442	-2.233196	-0.000672
J42	COMB2	-19.25453	-7.220237	1060.041	7.001562	-23.93038	-0.011264
J42	COMB3	-7.791578	-27.32196	1005.771	25.45874	-8.506413	-0.022571
J43	D	10.55328	-15.54108	517.3041	5.570744	3.856023	-0.048962
J43	L	-0.377852	0.362633	69.81073	0.123339	0.046715	-0.01278
J43	EX	-15.99676	-0.305366	-64.9702	0.358752	-21.60951	0.022669
J43	EY	-0.013776	-14.33559	48.64024	20.02241	-0.013387	0.033613
J43	COMB1	12.05937	-18.06909	732.462	6.882235	4.701971	-0.079202
J43	COMB2	-5.599065	-21.03567	513.2372	12.5665	-18.30652	-0.021384
J43	COMB3	5.908478	-31.35246	595.7663	27.02467	-2.757513	-0.013001
J44	D	-1.141907	-4.720696	730.3441	2.770636	-0.587012	-0.046499
J44	L	0.800111	0.631191	150.4497	0.267083	0.383543	-0.009659
J44	EX	-30.26207	-0.253196	13.32351	0.357115	-26.85202	-0.006315
J44	EY	-0.032886	-13.64856	47.02375	19.11505	-0.01962	0.082253
J44	COMB1	-0.090111	-4.654931	1117.133	3.752096	-0.090745	-0.071253
J44	COMB2	-32.27857	-9.319261	842.8553	9.384155	-28.29356	-0.032493
J44	COMB3	-10.51405	-19.16865	867.8249	23.1766	-8.974532	0.03251
J45	D	-0.343128	-4.417896	674.0027	2.804784	-0.204656	0.00291
J45	L	-0.099607	0.564582	146.0948	0.334822	-0.040596	-9.22E-05
J45	EX	-28.21266	-0.292212	0.264068	0.350527	-25.90781	0.022288
J45	EY	-0.020695	-12.21975	42.62228	17.43034	-0.010964	0.05973
J45	COMB1	-0.571126	-4.398144	1042.555	3.901456	-0.310542	0.003344
J45	COMB2	-29.59829	-8.61261	767.422	8.903844	-27.04571	0.044909
J45	COMB3	-9.300381	-17.38374	798.5593	21.46276	-8.400148	0.072763
J46	D	0.170785	-4.411581	673.6762	2.800586	0.053098	-0.00236
J46	L	0.020771	0.592946	147.1935	0.334193	-0.070319	-0.004695
J46	EX	-28.10408	0.295867	0.125356	-0.355439	-25.80586	0.018794
J46	EY	0.020701	-12.22077	42.62239	17.43114	0.010968	-0.059747
J46	COMB1	0.238176	-4.345183	1043.921	3.895412	-0.048793	-0.010344
J46	COMB2	-28.89533	-7.988702	767.2817	8.168815	-26.67201	-0.003326
J46	COMB3	-8.645181	-17.18399	798.519	21.23662	-8.083727	-0.060772
J47	D	1.09529	-4.674641	731.6176	2.766346	0.483025	0.039019
J47	L	-0.828841	0.841375	178.6364	0.343255	-0.475375	0.001447
J47	EX	-29.88266	0.25837	-12.73432	-0.361401	-26.52531	-0.008574
J47	EY	0.032889	-13.64867	47.02379	19.11516	0.019623	-0.082236
J47	COMB1	-0.011796	-4.26337	1163.759	3.868824	-0.18097	0.049139
J47	COMB2	-30.02922	-8.675258	826.1014	8.660013	-27.09008	0.006648
J47	COMB3	-8.489533	-18.89306	869.8326	22.96986	-7.977434	-0.047622

FrameForces

FRAME	LOAD	STATION	P	V2	V3	T	M2	M3
F1	D	0	-68.6274109	5.296844959	-4.53238773	-0.00188348	-4.3187089	5.1701684
F1	D	0.675000012	-71.2194138	5.296844959	-4.53238773	-0.00188348	-1.25934744	1.594798088
F1	D	1.350000024	-73.811409	5.296844959	-4.53238773	-0.00188348	1.800014019	-1.98057199
F1	L	0	-0.13885996	0.000659242	-0.25881171	-0.00112596	-0.13148233	0.000643224
F1	L	0.675000012	-0.13885996	0.000659242	-0.25881171	-0.00112596	0.043215547	0.000198236
F1	L	1.350000024	-0.13885996	0.000659242	-0.25881171	-0.00112596	0.217913419	-0.00024675
F1	EX	0	2.616662502	-0.19391277	0.459649026	-0.22878402	-0.1927541	0.077295989
F1	EX	0.675000012	2.616662502	-0.19391277	0.459649026	-0.22878402	-0.50301719	0.208187103
F1	EX	1.350000024	2.616662502	-0.19391277	0.459649026	-0.22878402	-0.81328022	0.339078218
F1	EY	0	35.63752747	1.69981E-05	8.886175156	0.000983838	-4.02545452	2.76517E-05
F1	EY	0.675000012	35.63752747	1.69981E-05	8.886175156	0.000983838	-10.0236216	1.6178E-05
F1	EY	1.350000024	35.63752747	1.69981E-05	8.886175156	0.000983838	-16.0217876	4.70427E-06
F1	COMB1	0	-82.5750656	6.35726881	-5.8529644	-0.00406171	-5.39282274	6.20523119
F1	COMB1	0.675000012	-85.6854706	6.35726881	-5.8529644	-0.00406171	-1.44207203	1.914074898
F1	COMB1	1.350000024	-88.7958679	6.35726881	-5.8529644	-0.00406171	2.508678198	-2.37708116
F1	COMB2	0	-58.1684532	5.361200333	-1.56565118	-0.23881388	-6.04358006	5.508889675
F1	COMB2	0.675000012	-60.8900566	5.361200333	-1.56565118	-0.23881388	-4.98676538	1.89007926
F1	COMB2	1.350000024	-63.6116562	5.361200333	-1.56565118	-0.23881388	-3.92995095	-1.7287308
F1	COMB3	0	-33.8588676	5.500830173	4.634739876	-0.07336627	-8.86350632	5.453256607
F1	COMB3	0.675000012	-36.580471	5.500830173	4.634739876	-0.07336627	-11.9919558	1.740196347
F1	COMB3	1.350000024	-39.3020706	5.500830173	4.634739876	-0.07336627	-15.1204033	-1.97286367
F2	D	0	-68.6444397	-5.29938316	-4.53479862	0.000406326	-4.3176055	-5.1699543
F2	D	0.675000012	-71.2364426	-5.29938316	-4.53479862	0.000406326	-1.25661683	-1.59287059
F2	D	1.350000024	-73.8284378	-5.29938316	-4.53479862	0.000406326	1.804371953	1.984212875
F2	L	0	-0.16215003	0.000802281	-0.26617202	-0.00093506	-0.13069086	0.00077774
F2	L	0.675000012	-0.16215003	0.000802281	-0.26617202	-0.00093506	0.048975229	0.0002362
F2	L	1.350000024	-0.16215003	0.000802281	-0.26617202	-0.00093506	0.228641301	-0.00030534
F2	EX	0	-2.62800503	-0.19391178	-0.46067518	-0.22853185	0.195112124	0.077286318
F2	EX	0.675000012	-2.62800503	-0.19391178	-0.46067518	-0.22853185	0.506067812	0.208176747
F2	EX	1.350000024	-2.62800503	-0.19391178	-0.46067518	-0.22853185	0.817023516	0.339067191
F2	EY	0	35.63796234	-0.00023546	8.890788078	-0.00084109	-4.02274132	-0.00013822
F2	EY	0.675000012	35.63796234	-0.00023546	8.890788078	-0.00084109	-10.0240231	2.07178E-05
F2	EY	1.350000024	35.63796234	-0.00023546	8.890788078	-0.00084109	-16.0253029	0.000179654
F2	COMB1	0	-82.6327667	-6.35797644	-5.86763334	-0.0010085	-5.39023209	-6.20270061
F2	COMB1	0.675000012	-85.7431717	-6.35797644	-5.86763334	-0.0010085	-1.42957985	-1.91106677
F2	COMB1	1.350000024	-88.853569	-6.35797644	-5.86763334	-0.0010085	2.531072378	2.380566835
F2	COMB2	0	-63.6217651	-5.76487255	-2.52158332	-0.23666331	-5.63987637	-5.34825897
F2	COMB2	0.675000012	-66.3433685	-5.76487255	-2.52158332	-0.23666331	-3.93780732	-1.45697021
F2	COMB2	1.350000024	-69.0649643	-5.76487255	-2.52158332	-0.23666331	-2.23573875	2.434318542
F2	COMB3	0	-35.5357018	-5.62542915	4.344831467	-0.07273858	-8.73707199	-5.40400696
F2	COMB3	0.675000012	-38.2573013	-5.62542915	4.344831467	-0.07273858	-11.6698332	-1.60684228
F2	COMB3	1.350000024	-40.9788971	-5.62542915	4.344831467	-0.07273858	-14.6025934	2.190322161
F3	D	0	-103.833069	5.73938942	1.493609786	-0.00103116	1.569254875	5.635402203
F3	D	0.675000012	-106.425072	5.73938942	1.493609786	-0.00103116	0.561068416	1.761315227
F3	D	1.350000024	-109.017075	5.73938942	1.493609786	-0.00103116	-0.44711804	-2.11277199
F3	L	0	0.396874875	-0.01412438	-0.2844044	-0.00093624	-0.14579034	-0.00370636
F3	L	0.675000012	0.396874875	-0.01412438	-0.2844044	-0.00093624	0.046182599	0.005827594
F3	L	1.350000024	0.396874875	-0.01412438	-0.2844044	-0.00093624	0.238155559	0.015361547
F3	EX	0	9.055391312	-3.81863403	1.288824081	-0.28669927	0.657431901	-0.70936489
F3	EX	0.675000012	9.055391312	-3.81863403	1.288824081	-0.28669927	-0.21252427	1.8682127
F3	EX	1.350000024	9.055391312	-3.81863403	1.288824081	-0.28669927	-1.08248043	4.445790291
F3	EY	0	3.923191786	-0.00047994	24.98514938	-0.00324978	12.15233994	-8.2624E-05
F3	EY	0.675000012	3.923191786	-0.00047994	24.98514938	-0.00324978	-4.71263504	0.000241338
F3	EY	1.350000024	3.923191786	-0.00047994	24.98514938	-0.00324978	-21.57761	0.0005653
F3	COMB1	0	-123.964676	6.864667892	1.337284684	-0.00273537	1.649841309	6.756552696
F3	COMB1	0.675000012	-127.075089	6.864667892	1.337284684	-0.00273537	0.747174263	2.122902393
F3	COMB1	1.350000024	-130.185486	6.864667892	1.337284684	-0.00273537	-0.15549277	-2.51074791
F3	COMB2	0	-98.2915649	2.069472313	10.6829586	-0.29913506	6.110222816	5.181786537
F3	COMB2	0.675000012	-101.013176	2.069472313	10.6829586	-0.29913506	-1.10077322	3.784892797
F3	COMB2	1.350000024	-103.734779	2.069472313	10.6829586	-0.29913506	-8.31176949	2.387999296
F3	COMB3	0	-101.927902	4.818535805	28.11909103	-0.09510018	14.56884098	5.692468166
F3	COMB3	0.675000012	-104.649513	4.818535805	28.11909103	-0.09510018	-4.41154242	2.439957142
F3	COMB3	1.350000024	-107.371109	4.818535805	28.11909103	-0.09510018	-23.3919258	-0.81255418
F4	D	0	-103.900169	-5.76808262	1.486468911	-0.00095183	1.565499902	-5.64101076
F4	D	0.675000012	-106.492165	-5.76808262	1.486468911	-0.00095183	0.562133551	-1.74755526
F4	D	1.350000024	-109.084167	-5.76808262	1.486468911	-0.00095183	-0.44123286	2.145900249
F4	L	0	0.342189074	-0.01185857	-0.299413	-0.00148282	-0.15279208	-0.00143791
F4	L	0.675000012	0.342189074	-0.01185857	-0.299413	-0.00148282	0.04931166	0.006566625
F4	L	1.350000024	0.342189074	-0.01185857	-0.299413	-0.00148282	0.251415402	0.014571157
F4	EX	0	-9.0553751	-3.81928754	-1.29423809	-0.28756452	-0.65961379	-0.70991355
F4	EX	0.675000012	-9.0553751	-3.81928754	-1.29423809	-0.28756452	0.213996813	1.868105173
F4	EX	1.350000024	-9.0553751	-3.81928754	-1.29423809	-0.28756452	1.087607384	4.446124077
F4	EY	0	3.923288822	0.000408232	24.99118042	0.003345163	12.15616798	4.25547E-05
F4	EY	0.675000012	3.923288822	0.000408232	24.99118042	0.003345163	-4.7128768	-0.000233
F4	EY	1.350000024	3.923288822	0.000408232	24.99118042	0.003345163	-21.5819206	-0.00050856
F4	COMB1	0	-124.132698	-6.94067287	1.304701924	-0.00351471	1.634132624	-6.77151346
F4	COMB1	0.675000012	-127.243095	-6.94067287	1.304701924	-0.00351471	0.753458917	-2.08655977
F4	COMB1	1.350000024	-130.3535	-6.94067287	1.304701924	-0.00351471	-0.1272148	2.598393917
F4	COMB2	0	-117.123863	-10.0130558	7.999162674	-0.29804206	4.742137909	-6.6582613
F4	COMB2	0.675000012	-119.845467	-10.0130558	7.999162674	-0.29804206	-0.65729612	0.10055092
F4	COMB2	1.350000024	-122.567062	-10.0130558	7.999162674	-0.29804206	-6.05673027	6.859363079
F4	COMB3	0	-107.720375	-7.26286936	27.29953194	-0.08853692	14.15184307	-6.14709234
F4	COMB3	0.675000012	-110.441978	-7.26286936	27.29953194	-0.08853692	-4.27533817	-1.24465609

F4	COMB3	1.350000024	-113.163574	-7.26286936	27.29953194	-0.08853692	-22.7025204	3.65778017
F5	D	0	-114.927505	5.678545475	-3.28430843	-0.00399191	-2.96941304	5.602561474
F5	D	0.675000012	-117.519508	5.678545475	-3.28430843	-0.00399191	-0.75250512	1.769543409
F5	D	1.350000024	-120.111504	5.678545475	-3.28430843	-0.00399191	1.464402795	-2.06347466
F5	L	0	-2.46898127	-0.04306318	-0.98938525	-0.00264707	-0.80543196	-0.02002004
F5	L	0.675000012	-2.46898127	-0.04306318	-0.98938525	-0.00264707	-0.13759705	0.009047606
F5	L	1.350000024	-2.46898127	-0.04306318	-0.98938525	-0.00264707	0.530237913	0.038115252
F5	EX	0	23.45096207	-8.00598717	0.935367942	-0.65075523	0.372222692	-1.15396571
F5	EX	0.675000012	23.45096207	-8.00598717	0.935367942	-0.65075523	-0.25915056	4.25007534
F5	EX	1.350000024	23.45096207	-8.00598717	0.935367942	-0.65075523	-0.89052385	9.654116631
F5	EY	0	1.85279119	0.014088432	28.45405388	0.016110925	15.89884949	0.011880946
F5	EY	0.675000012	1.85279119	0.014088432	28.45405388	0.016110925	-3.30763435	0.002371256
F5	EY	1.350000024	1.85279119	0.014088432	28.45405388	0.016110925	-22.5141163	-0.00713843
F5	COMB1	0	-141.863373	6.745353699	-5.52418661	-0.00902561	-4.85198689	6.69104147
F5	COMB1	0.675000012	-144.97377	6.745353699	-5.52418661	-0.00902561	-1.12316144	2.137928247
F5	COMB1	1.350000024	-148.084183	6.745353699	-5.52418661	-0.00902561	2.605664015	-2.41518521
F5	COMB2	0	-96.5962372	-2.33285117	6.17095232	-0.67348206	2.021793365	4.685770988
F5	COMB2	0.675000012	-99.3178329	-2.33285117	6.17095232	-0.67348206	-2.14359903	6.260445595
F5	COMB2	1.350000024	-102.039436	-2.33285117	6.17095232	-0.67348206	-6.30899096	7.835119724
F5	COMB3	0	-112.119125	3.441814661	26.41121674	-0.19309677	13.4394474	5.525358677
F5	COMB3	0.675000012	-114.840729	3.441814661	26.41121674	-0.19309677	-4.38812208	3.202134132
F5	COMB3	1.350000024	-117.562325	3.441814661	26.41121674	-0.19309677	-22.2156906	0.878909111
F6	D	0	-115.098938	-5.73299313	-3.2875216	0.000364113	-2.96974301	-5.60969019
F6	D	0.675000012	-117.690941	-5.73299313	-3.2875216	0.000364113	-0.75066602	-1.7399199
F6	D	1.350000024	-120.282936	-5.73299313	-3.2875216	0.000364113	1.46841085	2.129849911
F6	L	0	-2.68009543	-0.00527864	-1.0181551	-0.00083988	-0.82603467	0.016942702
F6	L	0.675000012	-2.68009543	-0.00527864	-1.0181551	-0.00083988	-0.1387801	0.020505784
F6	L	1.350000024	-2.68009543	-0.00527864	-1.0181551	-0.00083988	0.548474491	0.024068866
F6	EX	0	-23.4586391	-8.01146698	-0.94299537	-0.64671135	-0.37684616	-1.15964627
F6	EX	0.675000012	-23.4586391	-8.01146698	-0.94299537	-0.64671135	0.259675622	4.248093605
F6	EX	1.350000024	-23.4586391	-8.01146698	-0.94299537	-0.64671135	0.896197379	9.655833244
F6	EY	0	1.853183627	-0.01406179	28.46146011	-0.01598767	15.90354729	-0.01187283
F6	EY	0.675000012	1.853183627	-0.01406179	28.46146011	-0.01598767	-3.30793524	-0.00238112
F6	EY	1.350000024	1.853183627	-0.01406179	28.46146011	-0.01598767	-22.5194187	0.007110582
F6	COMB1	0	-142.406876	-6.88803768	-5.57407427	-0.00090688	-4.88534689	-6.70451975
F6	COMB1	0.675000012	-145.517273	-6.88803768	-5.57407427	-0.00090688	-1.12284744	-2.05509472
F6	COMB1	1.350000024	-148.627686	-6.88803768	-5.57407427	-0.00090688	2.639652014	2.594330311
F6	COMB2	0	-145.394058	-14.3176041	4.216742992	-0.67426461	1.241150618	-7.0888114
F6	COMB2	0.675000012	-148.115662	-14.3176041	4.216742992	-0.67426461	-1.60515034	2.575570107
F6	COMB2	1.350000024	-150.83725	-14.3176041	4.216742992	-0.67426461	-4.45145178	12.23995113
F6	COMB3	0	-127.141747	-8.55968285	25.81487274	-0.22038338	13.20158672	-6.26259279
F6	COMB3	0.675000012	-129.863342	-8.55968285	25.81487274	-0.22038338	-4.22344923	-0.48480731
F6	COMB3	1.350000024	-132.584946	-8.55968285	25.81487274	-0.22038338	-21.6484871	5.29297781
F7	D	0	-524.785706	10.59882832	-15.4845839	-0.03845693	-15.4079332	10.42896175
F7	D	0.675000012	-527.377686	10.59882832	-15.4845839	-0.03845693	-4.95583963	3.274753571
F7	D	1.350000024	-529.969666	10.59882832	-15.4845839	-0.03845693	5.496253014	-3.87945461
F7	L	0	-51.1648521	-0.22324261	0.353325158	-0.0101753	0.55730629	-0.33127984
F7	L	0.675000012	-51.1648521	-0.22324261	0.353325158	-0.0101753	0.318811834	-0.18059111
F7	L	1.350000024	-51.1648521	-0.22324261	0.353325158	-0.0101753	0.0803174	-0.02990234
F7	EX	0	63.8698616	-14.5179596	0.263485044	-0.06493504	-0.05600926	0.200514108
F7	EX	0.675000012	63.8698616	-14.5179596	0.263485044	-0.06493504	-0.23386167	10.00013542
F7	EX	1.350000024	63.8698616	-14.5179596	0.263485044	-0.06493504	-0.41171408	19.799757
F7	EY	0	49.77297974	-0.01347839	14.81260014	-0.02688228	-0.70473588	-0.01871597
F7	EY	0.675000012	49.77297974	-0.01347839	14.81260014	-0.02688228	-10.7032394	-0.00961806
F7	EY	1.350000024	49.77297974	-0.01347839	14.81260014	-0.02688228	-20.7017422	-0.00052014
F7	COMB1	0	-711.606628	12.36140537	-18.01618	-0.0624288	-17.5978298	11.98470688
F7	COMB1	0.675000012	-714.71698	12.36140537	-18.01618	-0.0624288	-5.43690872	3.640758514
F7	COMB1	1.350000024	-717.827393	12.36140537	-18.01618	-0.0624288	6.724011421	-4.70318937
F7	COMB2	0	-485.358124	-3.9718852	-11.2088394	-0.11926068	-16.2827396	11.04769325
F7	COMB2	0.675000012	-488.079712	-3.9718852	-11.2088394	-0.11926068	-8.71677303	13.7287159
F7	COMB2	1.350000024	-490.8013	-3.9718852	-11.2088394	-0.11926068	-1.15080726	16.40973854
F7	COMB3	0	-494.761292	6.471138954	-0.51128787	-0.09226593	-16.7603931	10.88956738
F7	COMB3	0.675000012	-497.48288	6.471138954	-0.51128787	-0.09226593	-16.4152737	6.521548748
F7	COMB3	1.350000024	-500.204468	6.471138954	-0.51128787	-0.09226593	-16.0701542	2.153530598
F8	D	0	-740.620483	-1.33845854	-4.51485109	-0.01946338	-3.57620525	-1.14800525
F8	D	0.675000012	-743.212463	-1.33845854	-4.51485109	-0.01946338	-0.52868116	-0.24454585
F8	D	1.350000024	-745.804443	-1.33845854	-4.51485109	-0.01946338	2.518842936	0.658913553
F8	L	0	-111.787834	0.460538179	0.560005307	0.002642592	0.975195587	0.404568791
F8	L	0.675000012	-111.787834	0.460538179	0.560005307	0.002642592	0.597192109	0.09370558
F8	L	1.350000024	-111.787834	0.460538179	0.560005307	0.002642592	0.219188526	-0.21715765
F8	EX	0	-11.1223907	-27.6788979	0.328418672	0.027826389	0.052634701	-12.7507639
F8	EX	0.675000012	-11.1223907	-27.6788979	0.328418672	0.027826389	-0.16904789	5.932489395
F8	EX	1.350000024	-11.1223907	-27.6788979	0.328418672	0.027826389	-0.39073047	24.61574173
F8	EY	0	47.06438446	0.156629086	14.58729744	-0.13524967	-0.20733821	0.147086993
F8	EY	0.675000012	47.06438446	0.156629086	14.58729744	-0.13524967	-10.0537624	0.041362375
F8	EY	1.350000024	47.06438446	0.156629086	14.58729744	-0.13524967	-19.9001865	-0.06436224
F8	COMB1	0	-1067.6051	-0.86928916	-4.52181244	-0.01912791	-2.73113322	-0.73029625
F8	COMB1	0.675000012	-1070.71545	-0.86928916	-4.52181244	-0.01912791	0.321089953	-0.14352609
F8	COMB1	1.350000024	-1073.82593	-0.86928916	-4.52181244	-0.01912791	3.373313189	0.44324401
F8	COMB2	0	-809.551086	-29.858633	0.370720178	-0.03340747	-3.45866346	-14.2286749
F8	COMB2	0.675000012	-812.272644	-29.858633	0.370720178	-0.03340747	-3.7088995	5.925899506
F8	COMB2	1.350000024	-814.994263	-29.858633	0.370720178	-0.03340747	-3.95913553	26.08047485
F8	COMB3	0	-766.950623	-9.81470394	10.85592175	-0.15285099	-3.64895415	-4.94001579
F8	COMB3	0.675000012	-769.67218	-9.81470394	10.85592175	-0.15285099	-10.9767008	1.684908748

F8	COMB3	1.350000024	-772.393799	-9.81470394	10.85592175	-0.15285099	-18.3044472	8.309833527
F9	D	0	-609.023804	-0.42854661	-2.21385169	0.024119416	-1.77915299	-0.34772563
F9	D	0.675000012	-611.615784	-0.42854661	-2.21385169	0.024119416	-0.28480333	-0.05845672
F9	D	1.350000024	-614.207764	-0.42854661	-2.21385169	0.024119416	1.209546328	0.230812237
F9	L	0	-79.9111938	-0.22508387	0.299941033	0.008741918	0.485344172	-0.20768854
F9	L	0.675000012	-79.9111938	-0.22508387	0.299941033	0.008741918	0.282884032	-0.05575694
F9	L	1.350000024	-79.9111938	-0.22508387	0.299941033	0.008741918	0.080423854	0.096174657
F9	EX	0	-0.27728686	-25.925209	1.087700367	-0.31186789	0.608038068	-11.234931
F9	EX	0.675000012	-0.27728686	-25.925209	1.087700367	-0.31186789	-0.12615964	6.264584064
F9	EX	1.350000024	-0.27728686	-25.925209	1.087700367	-0.31186789	-0.86035734	23.76409721
F9	EY	0	2.997898579	0.148908526	22.52692986	-0.07645671	9.913315773	0.143110126
F9	EY	0.675000012	2.997898579	0.148908526	22.52692986	-0.07645671	-5.29235983	0.042596877
F9	EY	1.350000024	2.997898579	0.148908526	22.52692986	-0.07645671	-20.4980354	-0.05791637
F9	COMB1	0	-858.686462	-0.87439013	-2.17671633	0.042930368	-1.35843289	-0.74957246
F9	COMB1	0.675000012	-861.796875	-0.87439013	-2.17671633	0.042930368	0.110850438	-0.15935917
F9	COMB1	1.350000024	-864.907288	-0.87439013	-2.17671633	0.042930368	1.580133796	0.430854142
F9	COMB2	0	-663.989685	-27.3065605	5.991690159	-0.31878805	2.036786556	-12.013607
F9	COMB2	0.675000012	-666.711243	-27.3065605	5.991690159	-0.31878805	-2.00760365	6.418319702
F9	COMB2	1.350000024	-669.432861	-27.3065605	5.991690159	-0.31878805	-6.05199385	24.85024643
F9	COMB3	0	-661.586548	-8.53096199	21.76583862	-0.15043885	8.885286331	-3.81927133
F9	COMB3	0.675000012	-664.308167	-8.53096199	21.76583862	-0.15043885	-5.80665302	1.939127684
F9	COMB3	1.350000024	-667.029785	-8.53096199	21.76583862	-0.15043885	-20.4985924	7.697526455
F10	D	0	-608.698303	0.275719941	-2.21478033	-0.02510413	-1.77792799	0.275164336
F10	D	0.675000012	-611.290283	0.275719941	-2.21478033	-0.02510413	-0.28295147	0.089053385
F10	D	1.350000024	-613.882263	0.275719941	-2.21478033	-0.02510413	1.212025046	-0.09705754
F10	L	0	-81.7932205	0.160232142	0.304545701	-0.01335337	0.49701786	0.218437284
F10	L	0.675000012	-81.7932205	0.160232142	0.304545701	-0.01335337	0.291449517	0.110280588
F10	L	1.350000024	-81.7932205	0.160232142	0.304545701	-0.01335337	0.085881181	0.002123908
F10	EX	0	-0.13492581	-25.8126278	-1.09597671	-0.31009468	-0.61345589	-11.1857567
F10	EX	0.675000012	-0.13492581	-25.8126278	-1.09597671	-0.31009468	0.126328334	6.237764359
F10	EX	1.350000024	-0.13492581	-25.8126278	-1.09597671	-0.31009468	0.86611259	23.66128731
F10	EY	0	2.997229815	-0.14880778	22.53647614	0.076536454	9.919306755	-0.14304844
F10	EY	0.675000012	2.997229815	-0.14880778	22.53647614	0.076536454	-5.29281187	-0.0426032
F10	EY	1.350000024	2.997229815	-0.14880778	22.53647614	0.076536454	-20.5049305	0.057842039
F10	COMB1	0	-861.307068	0.587235332	-2.17046332	-0.05149034	-1.33828509	0.679696858
F10	COMB1	0.675000012	-864.41748	0.587235332	-2.17046332	-0.05149034	0.12677744	0.283313006
F10	COMB1	1.350000024	-867.527893	0.587235332	-2.17046332	-0.05149034	1.59183991	-0.1130708
F10	COMB2	0	-664.093567	-26.4229641	3.735066652	-0.32740468	0.77939111	-11.2645884
F10	COMB2	0.675000012	-666.815186	-26.4229641	3.735066652	-0.32740468	-1.74177837	6.570910454
F10	COMB2	1.350000024	-669.536743	-26.4229641	3.735066652	-0.32740468	-4.26294804	24.40641022
F10	COMB3	0	-661.793457	-7.94724655	21.08848	-0.0478822	8.511770248	-3.31598401
F10	COMB3	0.675000012	-664.515076	-7.94724655	21.08848	-0.0478822	-5.72295141	2.048406839
F10	COMB3	1.350000024	-667.236633	-7.94724655	21.08848	-0.0478822	-19.957674	7.412797928
F11	D	0	-741.906921	1.312386394	-4.47179079	0.012201948	-3.51855206	1.198624492
F11	D	0.675000012	-744.498901	1.312386394	-4.47179079	0.012201948	-0.5000934	0.312763751
F11	D	1.350000024	-747.090881	1.312386394	-4.47179079	0.012201948	2.518365145	-0.57309699
F11	L	0	-140.059341	-0.47764009	0.767763615	-0.01091439	1.333177447	-0.34762767
F11	L	0.675000012	-140.059341	-0.47764009	0.767763615	-0.01091439	0.814937055	-0.02522066
F11	L	1.350000024	-140.059341	-0.47764009	0.767763615	-0.01091439	0.296696693	0.297186345
F11	EX	0	10.54515457	-27.3027325	-0.32190543	0.025480026	-0.04964377	-12.5671844
F11	EX	0.675000012	10.54515457	-27.3027325	-0.32190543	0.025480026	0.167642385	5.862157822
F11	EX	1.350000024	10.54515457	-27.3027325	-0.32190543	0.025480026	0.384928524	24.29149818
F11	EY	0	47.0644455	-0.15654111	14.58751106	0.135115698	-0.2072521	-0.14703469
F11	EY	0.675000012	47.0644455	-0.15654111	14.58751106	0.135115698	-10.0538206	-0.04136946
F11	EY	1.350000024	47.0644455	-0.15654111	14.58751106	0.135115698	-19.9003887	0.064295776
F11	COMB1	0	-1114.38318	0.810639501	-4.13772726	-0.00282068	-2.08917856	0.882145107
F11	COMB1	0.675000012	-1117.49365	0.810639501	-4.13772726	-0.00282068	0.703787148	0.334963471
F11	COMB1	1.350000024	-1120.604	0.810639501	-4.13772726	-0.00282068	3.496752977	-0.21221823
F11	COMB2	0	-797.381409	-27.0800896	-0.19164093	0.078307286	-3.39119458	-11.9042988
F11	COMB2	0.675000012	-800.102966	-27.0800896	-0.19164093	0.078307286	-3.26183653	6.374759197
F11	COMB2	1.350000024	-802.824585	-27.0800896	-0.19164093	0.078307286	-3.13247871	24.65381622
F11	COMB3	0	-770.381531	-7.53717995	10.76195145	0.159271702	-3.50778127	-2.96399641
F11	COMB3	0.675000012	-773.103149	-7.53717995	10.76195145	0.159271702	-10.7720976	2.123599291
F11	COMB3	1.350000024	-775.824707	-7.53717995	10.76195145	0.159271702	-18.0364132	7.211194515
F12	D	0	-566.842102	-10.5244484	-15.2062807	0.02750089	-14.912056	-10.2805595
F12	D	0.675000012	-569.434143	-10.5244484	-15.2062807	0.02750089	-4.64781713	-3.1765573
F12	D	1.350000024	-572.026123	-10.5244484	-15.2062807	0.02750089	5.6164217	3.927444696
F12	L	0	-96.2982712	0.19332464	0.677648723	0.006620787	1.118286014	0.376193941
F12	L	0.675000012	-96.2982712	0.19332464	0.677648723	0.006620787	0.660873175	0.245699838
F12	L	1.350000024	-96.2982712	0.19332464	0.677648723	0.006620787	0.203460351	0.115205713
F12	EX	0	-62.8564262	-14.2629557	-0.26526865	-0.09890573	0.053276163	0.146371096
F12	EX	0.675000012	-62.8564262	-14.2629557	-0.26526865	-0.09890573	0.232332498	9.7738657
F12	EX	1.350000024	-62.8564262	-14.2629557	-0.26526865	-0.09890573	0.411388814	19.40135765
F12	EY	0	49.77302551	0.013545592	14.81257439	0.026902072	-0.70475942	0.018751901
F12	EY	0.675000012	49.77302551	0.013545592	14.81257439	0.026902072	-10.7032452	0.009608625
F12	EY	1.350000024	49.77302551	0.013545592	14.81257439	0.026902072	-20.7017326	0.000465352
F12	COMB1	0	-834.287781	-12.3200188	-17.1632996	0.043594327	-16.1052094	-11.7347603
F12	COMB1	0.675000012	-837.398193	-12.3200188	-17.1632996	0.043594327	-4.51998329	-3.41874909
F12	COMB1	1.350000024	-840.508545	-12.3200188	-17.1632996	0.043594327	7.06524229	4.897262573
F12	COMB2	0	-674.896057	-25.7476654	-11.3617277	-0.06293181	-15.4722567	-10.5186853
F12	COMB2	0.675000012	-677.617676	-25.7476654	-11.3617277	-0.06293181	-7.80309105	6.860987663
F12	COMB2	1.350000024	-680.339233	-25.7476654	-11.3617277	-0.06293181	-0.13392565	24.24065971
F12	COMB3	0	-593.056274	-15.4683819	-0.28349149	0.028053349	-16.028614	-10.6102896
F12	COMB3	0.675000012	-595.777893	-15.4683819	-0.28349149	0.028053349	-15.8372555	-0.16913311

F12	COMB3	1.350000024	-598.499451	-15.4683819	-0.28349149	0.028053349	-15.6458988	10.2720232
F13	D	0	-796.754639	3.117077112	2.031012297	0.002500221	1.659813046	2.604121923
F13	D	0.675000012	-799.346619	3.117077112	2.031012297	0.002500221	0.288879991	0.500095129
F13	D	1.350000024	-801.938599	3.117077112	2.031012297	0.002500221	-1.08205307	-1.60393178
F13	L	0	-109.336121	-0.27730516	-0.72025609	0.000315993	-0.58916003	-0.52708703
F13	L	0.675000012	-109.336121	-0.27730516	-0.72025609	0.000315993	-0.10298726	-0.33990607
F13	L	1.350000024	-109.336121	-0.27730516	-0.72025609	0.000315993	0.383185536	-0.15272512
F13	EX	0	67.92973328	-16.1044998	0.613074005	-0.13401873	0.296248674	-0.04557658
F13	EX	0.675000012	67.92973328	-16.1044998	0.613074005	-0.13401873	-0.11757622	10.82495975
F13	EX	1.350000024	67.92973328	-16.1044998	0.613074005	-0.13401873	-0.5314011	21.69549561
F13	EY	0	-8.86840153	-0.00606779	27.58175659	-0.01910144	11.94414043	-0.00835956
F13	EY	0.675000012	-8.86840153	-0.00606779	27.58175659	-0.01910144	-6.67354441	-0.0042638
F13	EY	1.350000024	-8.86840153	-0.00606779	27.58175659	-0.01910144	-25.2912273	-0.00016804
F13	COMB1	0	-1131.04333	3.296804428	1.28480494	0.003505854	1.049119592	2.281607151
F13	COMB1	0.675000012	-1134.15381	3.296804428	1.28480494	0.003505854	0.181876376	0.056264419
F13	COMB1	1.350000024	-1137.26416	3.296804428	1.28480494	0.003505854	-0.68536687	-2.16907835
F13	COMB2	0	-803.519531	-13.4844885	11.22846699	-0.14200158	5.626239777	2.518490791
F13	COMB2	0.675000012	-806.241089	-13.4844885	11.22846699	-0.14200158	-1.9529748	11.62051964
F13	COMB2	1.350000024	-808.962708	-13.4844885	11.22846699	-0.14200158	-9.53218937	20.72254753
F13	COMB3	0	-858.947205	-1.89370859	31.0596447	-0.05954764	14.19188404	2.545161486
F13	COMB3	0.675000012	-861.668823	-1.89370859	31.0596447	-0.05954764	-6.77337503	3.823414803
F13	COMB3	1.350000024	-864.390381	-1.89370859	31.0596447	-0.05954764	-27.7386322	5.101667881
F14	D	0	-964.097595	0.488292456	-1.85826278	-0.00178355	-1.42684972	0.308729708
F14	D	0.675000012	-966.689697	0.488292456	-1.85826278	-0.00178355	-0.17252249	-0.02086767
F14	D	1.350000024	-969.281677	0.488292456	-1.85826278	-0.00178355	1.081804752	-0.35046503
F14	L	0	-237.40593	0.905869722	-1.39796662	0.002127694	-1.13154531	0.758184075
F14	L	0.675000012	-237.40593	0.905869722	-1.39796662	0.002127694	-0.18791795	0.146722063
F14	L	1.350000024	-237.40593	0.905869722	-1.39796662	0.002127694	0.75570935	-0.46473992
F14	EX	0	-9.80400753	-30.4521961	0.484276444	-0.08284176	0.209842652	-14.1424379
F14	EX	0.675000012	-9.80400753	-30.4521961	0.484276444	-0.08284176	-0.11704392	6.412792206
F14	EX	1.350000024	-9.80400753	-30.4521961	0.484276444	-0.08284176	-0.44393048	26.96802139
F14	EY	0	-8.73815727	0.001136872	26.10120583	-0.06810198	11.19548893	-0.00018429
F14	EY	0.675000012	-8.73815727	0.001136872	26.10120583	-0.06810198	-6.42282248	-0.00095168
F14	EY	1.350000024	-8.73815727	0.001136872	26.10120583	-0.06810198	-24.041132	-0.00171906
F14	COMB1	0	-1536.7666	2.035342455	-4.46666193	0.001264047	-3.5226922	1.583570242
F14	COMB1	0.675000012	-1539.87708	2.035342455	-4.46666193	0.001264047	-0.50769567	0.2097141
F14	COMB1	1.350000024	-1542.98743	2.035342455	-4.46666193	0.001264047	2.507300615	-1.16414189
F14	COMB2	0	-1099.98499	-30.7196083	6.331570625	-0.10839585	1.889137149	-14.0744867
F14	COMB2	0.675000012	-1102.70667	-30.7196083	6.331570625	-0.10839585	-2.38467216	6.6612463
F14	COMB2	1.350000024	-1105.42822	-30.7196083	6.331570625	-0.10839585	-6.6584816	27.39698029
F14	COMB3	0	-1099.34863	-8.79319191	25.16727829	-0.09880474	9.966734886	-3.89206719
F14	COMB3	0.675000012	-1102.07031	-8.79319191	25.16727829	-0.09880474	-7.02117491	2.04333663
F14	COMB3	1.350000024	-1104.79199	-8.79319191	25.16727829	-0.09880474	-24.0090847	7.978740692
F15	D	0	-630.647705	-1.49315012	-0.74843621	0.01444396	-0.65871227	-1.48499358
F15	D	0.675000012	-633.239746	-1.49315012	-0.74843621	0.01444396	-0.1535179	-0.4771173
F15	D	1.350000024	-635.831726	-1.49315012	-0.74843621	0.01444396	0.351676464	0.530758977
F15	L	0	-148.530502	-0.56920457	-0.69542384	0.004861612	-0.61463219	-0.57119572
F15	L	0.675000012	-148.530502	-0.56920457	-0.69542384	0.004861612	-0.14522113	-0.18698271
F15	L	1.350000024	-148.530502	-0.56920457	-0.69542384	0.004861612	0.324189931	0.197230324
F15	EX	0	-25.0473461	-28.4149189	0.708701372	-0.08241058	0.323031992	-12.3126068
F15	EX	0.675000012	-25.0473461	-28.4149189	0.708701372	-0.08241058	-0.15534137	6.867460728
F15	EX	1.350000024	-25.0473461	-28.4149189	0.708701372	-0.08241058	-0.63371474	26.04752922
F15	EY	0	-8.19783974	-0.00827567	19.83906746	-0.05654704	7.036664009	-0.00875534
F15	EY	0.675000012	-8.19783974	-0.00827567	19.83906746	-0.05654704	-6.35470581	-0.00316926
F15	EY	1.350000024	-8.19783974	-0.00827567	19.83906746	-0.05654704	-19.7460766	0.002416815
F15	COMB1	0	-994.426086	-2.7025075	-2.01080155	0.025111331	-1.7738608	-2.69590545
F15	COMB1	0.675000012	-997.536499	-2.7025075	-2.01080155	0.025111331	-0.41657528	-0.8717131
F15	COMB1	1.350000024	-1000.64685	-2.7025075	-2.01080155	0.025111331	0.940715611	0.952479243
F15	COMB2	0	-737.473572	-31.1591568	5.977895737	-0.0864097	1.665630341	-14.4854765
F15	COMB2	0.675000012	-740.195129	-31.1591568	5.977895737	-0.0864097	-2.36944914	6.546950817
F15	COMB2	1.350000024	-742.916748	-31.1591568	5.977895737	-0.0864097	-6.40452862	27.57937813
F15	COMB3	0	-725.464905	-10.7064962	20.04934692	-0.06863616	6.604995251	-5.62683439
F15	COMB3	0.675000012	-728.186462	-10.7064962	20.04934692	-0.06863616	-6.9283123	1.600049615
F15	COMB3	1.350000024	-730.908081	-10.7064962	20.04934692	-0.06863616	-20.4616203	8.826933861
F16	D	0	-629.598511	1.305931211	-0.75155592	-0.01474148	-0.65999967	1.386688232
F16	D	0.675000012	-632.190613	1.305931211	-0.75155592	-0.01474148	-0.1526995	0.50518477
F16	D	1.350000024	-634.782593	1.305931211	-0.75155592	-0.01474148	0.354600638	-0.37631872
F16	L	0	-152.144104	0.575115085	-0.72237158	-0.00685337	-0.63648236	0.655251801
F16	L	0.675000012	-152.144104	0.575115085	-0.72237158	-0.00685337	-0.14888161	0.267049164
F16	L	1.350000024	-152.144104	0.575115085	-0.72237158	-0.00685337	0.338719189	-0.12115344
F16	EX	0	24.59807396	-28.2857037	-0.71354127	-0.08149214	-0.32503542	-12.2448874
F16	EX	0.675000012	24.59807396	-28.2857037	-0.71354127	-0.08149214	0.156604916	6.847960949
F16	EX	1.350000024	24.59807396	-28.2857037	-0.71354127	-0.08149214	0.638245225	25.94080925
F16	EY	0	-8.19794846	0.008279135	19.84518051	0.056602735	7.040483952	0.008756667
F16	EY	0.675000012	-8.19794846	0.008279135	19.84518051	0.056602735	-6.35501194	0.003168252
F16	EY	1.350000024	-8.19794846	0.008279135	19.84518051	0.056602735	-19.7505093	-0.00242016
F16	COMB1	0	-998.948792	2.487301588	-2.05766153	-0.02865517	-1.8103714	2.712428808
F16	COMB1	0.675000012	-1002.05927	2.487301588	-2.05766153	-0.02865517	-0.42144996	1.033500314
F16	COMB1	1.350000024	-1005.16968	2.487301588	-2.05766153	-0.02865517	0.96747148	-0.64542794
F16	COMB2	0	-686.127197	-27.7207069	4.496036053	-0.08415187	0.987849236	-11.0082731
F16	COMB2	0.675000012	-688.848877	-27.7207069	4.496036053	-0.08415187	-2.0469749	7.703201771
F16	COMB2	1.350000024	-691.570435	-27.7207069	4.496036053	-0.08415187	-5.08179903	26.41467667
F16	COMB3	0	-709.863281	-7.34891462	19.59599304	0.016125482	6.396630764	-2.18551803
F16	COMB3	0.675000012	-712.584961	-7.34891462	19.59599304	0.016125482	-6.83066416	2.774998665

F16	COMB3	1.350000024	-715.30658	-7.34891462	19.59599304	0.016125482	-20.0579605	7.735515594
F17	D	0	-967.260254	-0.40290362	-1.91468883	-0.00120135	-1.47181082	-0.14216132
F17	D	0.675000012	-969.852295	-0.40290362	-1.91468883	-0.00120135	-0.17939594	0.129798576
F17	D	1.350000024	-972.444275	-0.40290362	-1.91468883	-0.00120135	1.11301887	0.401758492
F17	L	0	-298.848145	-0.79784691	-1.87342322	-0.00512854	-1.50565851	-0.57591271
F17	L	0.675000012	-298.848145	-0.79784691	-1.87342322	-0.00512854	-0.24109794	-0.0373661
F17	L	1.350000024	-298.848145	-0.79784691	-1.87342322	-0.00512854	1.023462653	0.50118047
F17	EX	0	9.398713112	-30.0712357	-0.47979927	-0.0803669	-0.20763311	-13.950078
F17	EX	0.675000012	9.398713112	-30.0712357	-0.47979927	-0.0803669	0.116231382	6.348003864
F17	EX	1.350000024	9.398713112	-30.0712357	-0.47979927	-0.0803669	0.440095842	26.64608574
F17	EY	0	-8.73817635	-0.00113792	26.10148048	0.068047039	11.19564533	0.000182486
F17	EY	0.675000012	-8.73817635	-0.00113792	26.10148048	0.068047039	-6.42285109	0.000950584
F17	EY	1.350000024	-8.73817635	-0.00113792	26.10148048	0.068047039	-24.0413475	0.001718681
F17	COMB1	0	-1638.86926	-1.76003933	-5.29510355	-0.00964729	-4.17522669	-1.09205389
F17	COMB1	0.675000012	-1641.97974	-1.76003933	-5.29510355	-0.00964729	-0.60103184	0.095972531
F17	COMB1	1.350000024	-1645.09021	-1.76003933	-5.29510355	-0.00964729	2.973162889	1.283998966
F17	COMB2	0	-1102.78528	-31.7984581	5.12482214	-0.06462184	1.292044401	-14.7689552
F17	COMB2	0.675000012	-1105.50696	-31.7984581	5.12482214	-0.06462184	-2.1672101	6.695001602
F17	COMB2	1.350000024	-1108.22852	-31.7984581	5.12482214	-0.06462184	-5.62646437	28.15895844
F17	COMB3	0	-1115.97485	-10.1480045	24.65486526	0.043256901	9.670339584	-4.72476482
F17	COMB3	0.675000012	-1118.69653	-10.1480045	24.65486526	0.043256901	-6.97169209	2.125137568
F17	COMB3	1.350000024	-1121.41809	-10.1480045	24.65486526	0.043256901	-23.6137238	8.975039482
F18	D	0	-887.044617	-2.89758086	1.352505922	-0.00578341	1.127842665	-2.3064754
F18	D	0.675000012	-889.636597	-2.89758086	1.352505922	-0.00578341	0.214901298	-0.3506085
F18	D	1.350000024	-892.228638	-2.89758086	1.352505922	-0.00578341	-0.69804007	1.605258465
F18	L	0	-206.483368	0.283880442	-1.46853876	-0.00170219	-1.17770195	0.611207545
F18	L	0.675000012	-206.483368	0.283880442	-1.46853876	-0.00170219	-0.18643844	0.419588268
F18	L	1.350000024	-206.483368	0.283880442	-1.46853876	-0.00170219	0.804825127	0.227969021
F18	EX	0	-67.075798	-15.8790121	-0.60880107	-0.12722979	-0.2943835	-0.12415516
F18	EX	0.675000012	-67.075798	-15.8790121	-0.60880107	-0.12722979	0.116557181	10.59417725
F18	EX	1.350000024	-67.075798	-15.8790121	-0.60880107	-0.12722979	0.527497888	21.31250954
F18	EY	0	-8.86839676	0.006067012	27.58174706	0.019101629	11.9441309	0.008357279
F18	EY	0.675000012	-8.86839676	0.006067012	27.58174706	0.019101629	-6.67354727	0.004262045
F18	EY	1.350000024	-8.86839676	0.006067012	27.58174706	0.019101629	-25.2912235	0.000166813
F18	COMB1	0	-1394.8269	-3.02288842	-0.72665495	-0.0096636	-0.53091204	-1.78983843
F18	COMB1	0.675000012	-1397.93726	-3.02288842	-0.72665495	-0.0096636	-0.04041995	0.250611067
F18	COMB1	1.350000024	-1401.04773	-3.02288842	-0.72665495	-0.0096636	0.45007214	2.291060448
F18	COMB2	0	-1068.65613	-19.3859043	9.015683174	-0.1322746	4.270972729	-2.35513687
F18	COMB2	0.675000012	-1071.37769	-19.3859043	9.015683174	-0.1322746	-1.81461239	10.73034668
F18	COMB2	1.350000024	-1074.09937	-19.3859043	9.015683174	-0.1322746	-7.90019751	23.81583214
F18	COMB3	0	-1026.87976	-7.94855595	29.72660446	-0.02662945	13.26186466	-2.25960255
F18	COMB3	0.675000012	-1029.60132	-7.94855595	29.72660446	-0.02662945	-6.80359077	3.105672121
F18	COMB3	1.350000024	-1032.323	-7.94855595	29.72660446	-0.02662945	-26.8690453	8.470947266
F19	D	0	-776.905151	2.812223673	0.397773355	-0.0125377	0.238362253	2.280994415
F19	D	0.675000012	-779.497131	2.812223673	0.397773355	-0.0125377	-0.03013473	0.382743418
F19	D	1.350000024	-782.089111	2.812223673	0.397773355	-0.0125377	-0.2986317	-1.51550746
F19	L	0	-106.849251	-0.30867544	-0.05531529	-0.0027009	-0.01498611	-0.55862463
F19	L	0.675000012	-106.849251	-0.30867544	-0.05531529	-0.0027009	0.022351708	-0.35026869
F19	L	1.350000024	-106.849251	-0.30867544	-0.05531529	-0.0027009	0.059689526	-0.1419128
F19	EX	0	70.39054108	-18.1606274	0.499084592	-0.02372443	0.203303695	0.188060209
F19	EX	0.675000012	70.39054108	-18.1606274	0.499084592	-0.02372443	-0.13357839	12.44648361
F19	EX	1.350000024	70.39054108	-18.1606274	0.499084592	-0.02372443	-0.47046047	24.70490646
F19	EY	0	0.59741652	-0.00102662	25.60117531	-0.0199156	10.2558012	-0.00274537
F19	EY	0.675000012	0.59741652	-0.00102662	25.60117531	-0.0199156	-7.02499008	-0.0020524
F19	EY	1.350000024	0.59741652	-0.00102662	25.60117531	-0.0199156	-24.3057804	-0.00135943
F19	COMB1	0	-1103.245	2.880787849	0.388823569	-0.01936668	0.262056947	1.843393922
F19	COMB1	0.675000012	-1106.35535	2.880787849	0.388823569	-0.01936668	-0.00039894	-0.10113781
F19	COMB1	1.350000024	-1109.46582	2.880787849	0.388823569	-0.01936668	-0.26285481	-2.04566932
F19	COMB2	0	-776.36554	-15.9409704	8.981160164	-0.04484357	3.686556578	2.41285491
F19	COMB2	0.675000012	-779.087097	-15.9409704	8.981160164	-0.04484357	-2.37572622	13.17300987
F19	COMB2	1.350000024	-781.808716	-15.9409704	8.981160164	-0.04484357	-8.43800831	23.9331646
F19	COMB3	0	-826.607605	-2.86607361	27.43868256	-0.04239994	11.07819176	2.27543354
F19	COMB3	0.675000012	-829.329224	-2.86607361	27.43868256	-0.04239994	-7.44291735	4.210033417
F19	COMB3	1.350000024	-832.050781	-2.86607361	27.43868256	-0.04239994	-25.9640255	6.144632816
F20	D	0	-942.363281	0.618404508	-0.19974969	-0.00027295	-0.05976878	0.420325667
F20	D	0.675000012	-944.955261	0.618404508	-0.19974969	-0.00027295	0.075062253	0.00290264
F20	D	1.350000024	-947.547241	0.618404508	-0.19974969	-0.00027295	0.209893301	-0.41452038
F20	L	0	-233.249573	0.916205227	-0.13131784	0.001276935	-0.0415816	0.769439101
F20	L	0.675000012	-233.249573	0.916205227	-0.13131784	0.001276935	0.047057923	0.151000619
F20	L	1.350000024	-233.249573	0.916205227	-0.13131784	0.001276935	0.135697454	-0.46743783
F20	EX	0	-10.3788729	-34.8314552	0.454580247	-0.00997985	0.184342325	-16.2352524
F20	EX	0.675000012	-10.3788729	-34.8314552	0.454580247	-0.00997985	-0.12249931	7.275976181
F20	EX	1.350000024	-10.3788729	-34.8314552	0.454580247	-0.00997985	-0.42934096	30.78720665
F20	EY	0	0.509728312	0.003418115	24.40912247	-0.06532034	9.76453495	0.002163995
F20	EY	0.675000012	0.509728312	0.003418115	24.40912247	-0.06532034	-6.71162033	-0.00014323
F20	EY	1.350000024	0.509728312	0.003418115	24.40912247	-0.06532034	-23.1877747	-0.00245046
F20	COMB1	0	-1504.03516	2.208013773	-0.44980815	0.001715554	-0.13825311	1.735493302
F20	COMB1	0.675000012	-1507.14563	2.208013773	-0.44980815	0.001715554	0.16536738	0.245084167
F20	COMB1	1.350000024	-1510.25598	2.208013773	-0.44980815	0.001715554	0.468987882	-1.24532497
F20	COMB2	0	-1073.53662	-35.1115494	7.908261776	-0.03078942	3.190767288	-16.1190891
F20	COMB2	0.675000012	-1076.25818	-35.1115494	7.908261776	-0.03078942	-2.14730859	7.581203461
F20	COMB2	1.350000024	-1078.97974	-35.1115494	7.908261776	-0.03078942	-7.48538399	31.28149796
F20	COMB3	0	-1065.68921	-10.0303898	25.52166939	-0.07161437	10.23497391	-4.4281168
F20	COMB3	0.675000012	-1068.41077	-10.0303898	25.52166939	-0.07161437	-6.99214983	2.342395067

F20	COMB3	1.350000024	-1071.13232	-10.0303898	25.52166939	-0.07161437	-24.2192726	9.11290741
F21	D	0	-608.434204	-1.52469242	0.094138153	0.003834875	-0.0045291	-1.51786327
F21	D	0.675000012	-611.026184	-1.52469242	0.094138153	0.003834875	-0.06807234	-0.48869598
F21	D	1.350000024	-613.618164	-1.52469242	0.094138153	0.003834875	-0.13161559	0.540471256
F21	L	0	-143.695694	-0.58203161	0.068658389	0.002924287	0.0388836	-0.58073378
F21	L	0.675000012	-143.695694	-0.58203161	0.068658389	0.002924287	-0.0074608	-0.18786246
F21	L	1.350000024	-143.695694	-0.58203161	0.068658389	0.002924287	-0.05380521	0.20500885
F21	EX	0	-24.447052	-32.4314919	0.705049276	-0.0329333	0.373861194	-14.1360989
F21	EX	0.675000012	-24.447052	-32.4314919	0.705049276	-0.0329333	-0.10204703	7.75515604
F21	EX	1.350000024	-24.447052	-32.4314919	0.705049276	-0.0329333	-0.57795525	29.64640999
F21	EY	0	0.325103372	-0.00288362	21.1764946	-0.04840443	8.195240974	-0.0032617
F21	EY	0.675000012	0.325103372	-0.00288362	21.1764946	-0.04840443	-6.09889126	-0.00131526
F21	EY	1.350000024	0.325103372	-0.00288362	21.1764946	-0.04840443	-20.3930244	0.000631183
F21	COMB1	0	-960.034119	-2.76088142	0.222819209	0.00928071	0.056778844	-2.75060987
F21	COMB1	0.675000012	-963.144531	-2.76088142	0.222819209	0.00928071	-0.0936241	-0.8870151
F21	COMB1	1.350000024	-966.254883	-2.76088142	0.222819209	0.00928071	-0.24402705	0.976579666
F21	COMB2	0	-709.320313	-35.3517685	7.520794392	-0.04438559	2.975939989	-16.408577
F21	COMB2	0.675000012	-712.041931	-35.3517685	7.520794392	-0.04438559	-2.10059547	7.453864574
F21	COMB2	1.350000024	-714.763489	-35.3517685	7.520794392	-0.04438559	-7.17713118	31.31630707
F21	COMB3	0	-691.479492	-12.0032148	22.57788277	-0.05625087	8.730261803	-6.23298359
F21	COMB3	0.675000012	-694.201111	-12.0032148	22.57788277	-0.05625087	-6.50980711	1.869185686
F21	COMB3	1.350000024	-696.922668	-12.0032148	22.57788277	-0.05625087	-21.749876	9.971354485
F22	D	0	-607.355835	1.321852207	0.090313114	-0.00432253	-0.00670735	1.412518144
F22	D	0.675000012	-609.947876	1.321852207	0.090313114	-0.00432253	-0.06766869	0.520267904
F22	D	1.350000024	-612.539856	1.321852207	0.090313114	-0.00432253	-0.12863003	-0.37198219
F22	L	0	-147.095108	0.571084023	0.068408415	-0.00429939	0.040720273	0.655971587
F22	L	0.675000012	-147.095108	0.571084023	0.068408415	-0.00429939	-0.0054554	0.270489872
F22	L	1.350000024	-147.095108	0.571084023	0.068408415	-0.00429939	-0.05163107	-0.11499181
F22	EX	0	23.86286163	-32.2403564	-0.70997316	-0.03248085	-0.37594259	-14.0625763
F22	EX	0.675000012	23.86286163	-32.2403564	-0.70997316	-0.03248085	0.103289239	7.699659348
F22	EX	1.350000024	23.86286163	-32.2403564	-0.70997316	-0.03248085	0.582521081	29.4618969
F22	EY	0	0.32500574	0.002885186	21.18046379	0.048441947	8.197712898	0.003262867
F22	EY	0.675000012	0.32500574	0.002885186	21.18046379	0.048441947	-6.09909773	0.001315367
F22	EY	1.350000024	0.32500574	0.002885186	21.18046379	0.048441947	-20.3959103	-0.00063213
F22	COMB1	0	-964.179199	2.499957085	0.217829198	-0.01206605	0.057103623	2.744576216
F22	COMB1	0.675000012	-967.289612	2.499957085	0.217829198	-0.01206605	-0.08993107	1.057105303
F22	COMB1	1.350000024	-970.399963	2.499957085	0.217829198	-0.01206605	-0.23696576	-0.63036549
F22	COMB2	0	-659.258179	-31.8000221	6.053400993	-0.02425143	2.198963165	-12.8639641
F22	COMB2	0.675000012	-661.979736	-31.8000221	6.053400993	-0.02425143	-1.88708198	8.601047516
F22	COMB2	1.350000024	-664.701355	-31.8000221	6.053400993	-0.02425143	-5.97312737	30.06606102
F22	COMB3	0	-676.200562	-8.5848465	22.13222122	0.034739614	8.494960785	-2.73651052
F22	COMB3	0.675000012	-678.922119	-8.5848465	22.13222122	0.034739614	-6.4442873	3.058259487
F22	COMB3	1.350000024	-681.643738	-8.5848465	22.13222122	0.034739614	-21.3835373	8.853030205
F23	D	0	-945.293457	-0.55242711	-0.20500642	-0.00148937	-0.05945924	-0.26436186
F23	D	0.675000012	-947.885437	-0.55242711	-0.20500642	-0.00148937	0.078920066	0.108526424
F23	D	1.350000024	-950.477417	-0.55242711	-0.20500642	-0.00148937	0.217299387	0.481414676
F23	L	0	-293.017029	-0.82597405	-0.19937824	-0.00322608	-0.06709111	-0.59686351
F23	L	0.675000012	-293.017029	-0.82597405	-0.19937824	-0.00322608	0.067489177	-0.03933112
F23	L	1.350000024	-293.017029	-0.82597405	-0.19937824	-0.00322608	0.202069476	0.518201292
F23	EX	0	9.80092144	-34.2791595	-0.45222214	-0.00967401	-0.1833574	-16.0343838
F23	EX	0.675000012	9.80092144	-34.2791595	-0.45222214	-0.00967401	0.121892512	7.104044914
F23	EX	1.350000024	9.80092144	-34.2791595	-0.45222214	-0.00967401	0.427142411	30.2424736
F23	EY	0	0.509724617	-0.0034194	24.40934944	0.065281264	9.764662743	-0.00216492
F23	EY	0.675000012	0.509724617	-0.0034194	24.40934944	0.065281264	-6.71164703	0.000143181
F23	EY	1.350000024	0.509724617	-0.0034194	24.40934944	0.065281264	-23.1879559	0.002451277
F23	COMB1	0	-1603.17944	-1.98447096	-0.56501287	-0.00694897	-0.17869687	-1.27221584
F23	COMB1	0.675000012	-1606.28979	-1.98447096	-0.56501287	-0.00694897	0.202686772	0.067301922
F23	COMB1	1.350000024	-1609.40015	-1.98447096	-0.56501287	-0.00694897	0.584070385	1.406819582
F23	COMB2	0	-1074.55396	-36.3202362	6.942834377	0.007970939	2.802527905	-17.061861
F23	COMB2	0.675000012	-1077.27551	-36.3202362	6.942834377	0.007970939	-1.88388491	7.454295158
F23	COMB2	1.350000024	-1079.99719	-36.3202362	6.942834377	0.007970939	-6.57029724	31.97045135
F23	COMB3	0	-1081.23596	-11.6417551	25.20930672	0.062917955	10.11157227	-5.51869631
F23	COMB3	0.675000012	-1083.95764	-11.6417551	25.20930672	0.062917955	-6.90470791	2.339488029
F23	COMB3	1.350000024	-1086.6792	-11.6417551	25.20930672	0.062917955	-23.9209881	10.19767189
F24	D	0	-864.934204	-2.6032455	0.294402421	0.010155306	0.197398096	-1.98526168
F24	D	0.675000012	-867.526306	-2.6032455	0.294402421	0.010155306	-0.0013235	-0.22807127
F24	D	1.350000024	-870.118286	-2.6032455	0.294402421	0.010155306	-0.20004511	1.529119134
F24	L	0	-201.453201	0.305762678	-0.16402152	0.001320563	-0.05644503	0.641090393
F24	L	0.675000012	-201.453201	0.305762678	-0.16402152	0.001320563	0.054269481	0.434700608
F24	L	1.350000024	-201.453201	0.305762678	-0.16402152	0.001320563	0.164984003	0.228310838
F24	EX	0	-69.2274551	-18.3396587	-0.4936614	-0.02406032	-0.20115045	-0.51202452
F24	EX	0.675000012	-69.2274551	-18.3396587	-0.4936614	-0.02406032	0.132070974	11.86724377
F24	EX	1.350000024	-69.2274551	-18.3396587	-0.4936614	-0.02406032	0.465292364	24.24651337
F24	EY	0	0.597416639	0.001026007	25.60116959	0.019917535	10.25579357	0.002745077
F24	EY	0.675000012	0.597416639	0.001026007	25.60116959	0.019917535	-7.0249939	0.002052522
F24	EY	1.350000024	0.597416639	0.001026007	25.60116959	0.019917535	-24.3057823	0.001359967
F24	COMB1	0	-1360.24622	-2.63467431	0.090848468	0.014299268	0.146565676	-1.35656941
F24	COMB1	0.675000012	-1363.35669	-2.63467431	0.090848468	0.014299268	0.085242964	0.421835452
F24	COMB1	1.350000024	-1366.46704	-2.63467431	0.090848468	0.014299268	0.023920272	2.200240374
F24	COMB2	0	-1043.10095	-21.6183167	7.810884953	-0.00754936	3.211872101	-2.41166186
F24	COMB2	0.675000012	-1045.82263	-21.6183167	7.810884953	-0.00754936	-2.0604744	12.1807003
F24	COMB2	1.350000024	-1048.54419	-21.6183167	7.810884953	-0.00754936	-7.33282137	26.77306175
F24	COMB3	0	-992.818054	-8.41300774	26.983181	0.024413459	10.89470863	-2.04098678
F24	COMB3	0.675000012	-995.539734	-8.41300774	26.983181	0.024413459	-7.31893587	3.637792826

F24	COMB3	1.350000024	-998.261292	-8.41300774	26.983181	0.024413459	-25.5325813	9.316572189
F25	D	0	-771.698303	2.697909355	0.060779229	0.000835822	0.032108717	2.108524323
F25	D	0.675000012	-774.290283	2.697909355	0.060779229	0.000835822	-0.00891726	0.2874358
F25	D	1.350000024	-776.882263	2.697909355	0.060779229	0.000835822	-0.04994323	-1.53365278
F25	L	0	-107.02993	-0.35941875	0.039683465	-0.00038435	0.015455094	-0.58109665
F25	L	0.675000012	-107.02993	-0.35941875	0.039683465	-0.00038435	-0.01133124	-0.33848903
F25	L	1.350000024	-107.02993	-0.35941875	0.039683465	-0.00038435	-0.03811757	-0.09588142
F25	EX	0	68.59523773	-16.7618771	0.463008881	0.085748501	0.183811709	-0.02344551
F25	EX	0.675000012	68.59523773	-16.7618771	0.463008881	0.085748501	-0.12871924	11.29082108
F25	EX	1.350000024	68.59523773	-16.7618771	0.463008881	0.085748501	-0.44125018	22.60508537
F25	EY	0	-0.15205371	-0.000913	25.49497223	-0.02007804	10.27895355	-0.00078707
F25	EY	0.675000012	-0.15205371	-0.000913	25.49497223	-0.02007804	-6.93015146	-0.00017079
F25	EY	1.350000024	-0.15205371	-0.000913	25.49497223	-0.02007804	-24.1392555	0.000445481
F25	COMB1	0	-1097.28589	2.662421227	0.136428609	0.000388024	0.063258611	1.600474596
F25	COMB1	0.675000012	-1100.39624	2.662421227	0.136428609	0.000388024	-0.0288307	-0.19665951
F25	COMB1	1.350000024	-1103.50659	2.662421227	0.136428609	0.000388024	-0.12092	-1.99379361
F25	COMB2	0	-773.0495	-14.6292419	8.586448669	0.083181657	3.466697931	2.006391287
F25	COMB2	0.675000012	-775.771057	-14.6292419	8.586448669	0.083181657	-2.32915449	11.88112926
F25	COMB2	1.350000024	-778.492676	-14.6292419	8.586448669	0.083181657	-8.12500668	21.755867
F25	COMB3	0	-822.549805	-2.56136203	26.99188805	0.006685377	10.88938427	2.022693396
F25	COMB3	0.675000012	-825.271362	-2.56136203	26.99188805	0.006685377	-7.33013773	3.751612663
F25	COMB3	1.350000024	-827.992981	-2.56136203	26.99188805	0.006685377	-25.5496597	5.480531693
F26	D	0	-936.331482	1.074843407	0.155220643	0.006925219	0.06726034	0.819251418
F26	D	0.675000012	-938.923462	1.074843407	0.155220643	0.006925219	-0.03751357	0.093732193
F26	D	1.350000024	-941.515442	1.074843407	0.155220643	0.006925219	-0.14228749	-0.631787
F26	L	0	-231.160629	0.98305434	0.066394061	0.002073512	0.030067304	0.856420696
F26	L	0.675000012	-231.160629	0.98305434	0.066394061	0.002073512	-0.01474868	0.192859083
F26	L	1.350000024	-231.160629	0.98305434	0.066394061	0.002073512	-0.05956466	-0.47070253
F26	EX	0	-13.2124367	-31.7499218	0.454164922	0.050705194	0.184996456	-14.7499743
F26	EX	0.675000012	-13.2124367	-31.7499218	0.454164922	0.050705194	-0.12156483	6.681219578
F26	EX	1.350000024	-13.2124367	-31.7499218	0.454164922	0.050705194	-0.42812613	28.11241341
F26	EY	0	-0.1610416	-0.00042495	24.30375099	-0.05969675	9.774706841	-0.00021928
F26	EY	0.675000012	-0.1610416	-0.00042495	24.30375099	-0.05969675	-6.63032341	6.7562E-05
F26	EY	1.350000024	-0.1610416	-0.00042495	24.30375099	-0.05969675	-23.0353527	0.000354401
F26	COMB1	0	-1493.45471	2.862699032	0.292495251	0.011627882	0.128820091	2.353374958
F26	COMB1	0.675000012	-1496.56519	2.862699032	0.292495251	0.011627882	-0.06861418	0.421053171
F26	COMB1	1.350000024	-1499.67554	2.862699032	0.292495251	0.011627882	-0.26604846	-1.5112685
F26	COMB2	0	-1069.68921	-31.4230556	8.309638023	0.041600037	3.350598335	-14.1363058
F26	COMB2	0.675000012	-1072.41077	-31.4230556	8.309638023	0.041600037	-2.2584064	7.074253082
F26	COMB2	1.350000024	-1075.13245	-31.4230556	8.309638023	0.041600037	-7.86741161	28.28481293
F26	COMB3	0	-1060.29468	-8.56342411	25.84589767	-0.03878481	10.40181065	-3.51648569
F26	COMB3	0.675000012	-1063.01624	-8.56342411	25.84589767	-0.03878481	-7.04416752	2.263824463
F26	COMB3	1.350000024	-1065.73779	-8.56342411	25.84589767	-0.03878481	-24.4901447	8.044135094
F27	D	0	-779.591492	-0.71503478	-0.05775648	0.003650027	-0.33547121	-0.73711926
F27	D	0.675000012	-782.183472	-0.71503478	-0.05775648	0.003650027	-0.29648557	-0.25447083
F27	D	1.350000024	-784.775452	-0.71503478	-0.05775648	0.003650027	-0.25749996	0.228177592
F27	L	0	-197.543182	-0.27714068	0.062071864	0.002001045	-0.05986067	-0.26794076
F27	L	0.675000012	-197.543182	-0.27714068	0.062071864	0.002001045	-0.10175917	-0.08087081
F27	L	1.350000024	-197.543182	-0.27714068	0.062071864	0.002001045	-0.14365767	0.106199116
F27	EX	0	-1.3461808	-29.585865	0.601949871	0.037020732	0.308614194	-12.8214664
F27	EX	0.675000012	-1.3461808	-29.585865	0.601949871	0.037020732	-0.09770192	7.148989201
F27	EX	1.350000024	-1.3461808	-29.585865	0.601949871	0.037020732	-0.50401801	27.1194458
F27	EY	0	-0.19076253	-0.00045605	21.44667816	-0.04286864	8.361051559	-0.00031727
F27	EY	0.675000012	-0.19076253	-0.00045605	21.44667816	-0.04286864	-6.11545372	-9.4374E-06
F27	EY	1.350000024	-0.19076253	-0.00045605	21.44667816	-0.04286864	-20.591959	0.000298393
F27	COMB1	0	-1251.57886	-1.30146682	0.03000721	0.007581704	-0.49834251	-1.31324828
F27	COMB1	0.675000012	-1254.68921	-1.30146682	0.03000721	0.007581704	-0.51859736	-0.43475828
F27	COMB1	1.350000024	-1257.79968	-1.30146682	0.03000721	0.007581704	-0.53885221	0.443731695
F27	COMB2	0	-882.250549	-31.4596004	7.337629795	0.029275697	2.582046032	-14.1286945
F27	COMB2	0.675000012	-884.972168	-31.4596004	7.337629795	0.029275697	-2.37085342	7.106532097
F27	COMB2	1.350000024	-887.693726	-31.4596004	7.337629795	0.029275697	-7.32375288	28.34175873
F27	COMB3	0	-881.421509	-10.1581125	22.66753387	-0.02888768	8.505216599	-4.89747143
F27	COMB3	0.675000012	-884.143127	-10.1581125	22.66753387	-0.02888768	-6.79536629	1.959252954
F27	COMB3	1.350000024	-886.864685	-10.1581125	22.66753387	-0.02888768	-22.0959492	8.81597805
F28	D	0	-778.925659	0.497824132	-0.06175977	-0.0038506	-0.33789968	0.625302434
F28	D	0.675000012	-781.5177	0.497824132	-0.06175977	-0.0038506	-0.29621187	0.289271176
F28	D	1.350000024	-784.10968	0.497824132	-0.06175977	-0.0038506	-0.25452402	-0.04676007
F28	L	0	-200.79129	0.244899958	0.067162685	-0.00219385	-0.05515283	0.332190871
F28	L	0.675000012	-200.79129	0.244899958	0.067162685	-0.00219385	-0.10048764	0.166883409
F28	L	1.350000024	-200.79129	0.244899958	0.067162685	-0.00219385	-0.14582244	0.001575972
F28	EX	0	0.941907346	-29.4768562	-0.60640895	0.035170395	-0.31020853	-12.7742872
F28	EX	0.675000012	0.941907346	-29.4768562	-0.60640895	0.035170395	0.099117465	7.122588634
F28	EX	1.350000024	0.941907346	-29.4768562	-0.60640895	0.035170395	0.508443475	27.01946259
F28	EY	0	-0.1908206	0.000455098	21.44930458	0.042894278	8.362682343	0.000317171
F28	EY	0.675000012	-0.1908206	0.000455098	21.44930458	0.042894278	-6.11559725	9.97972E-06
F28	EY	1.350000024	-0.1908206	0.000455098	21.44930458	0.042894278	-20.5938759	-0.00029721
F28	COMB1	0	-1255.97681	0.989228904	0.033348572	-0.00813088	-0.49372417	1.281868339
F28	COMB1	0.675000012	-1259.08728	0.989228904	0.033348572	-0.00813088	-0.51623446	0.614138842
F28	COMB1	1.350000024	-1262.19775	0.989228904	0.033348572	-0.00813088	-0.53874475	-0.05359054
F28	COMB2	0	-880.206421	-29.9085445	6.085206509	0.045178857	1.94101131	-12.4600792
F28	COMB2	0.675000012	-882.928101	-29.9085445	6.085206509	0.045178857	-2.16650248	7.728185177
F28	COMB2	1.350000024	-885.649658	-29.9085445	6.085206509	0.045178857	-6.27401638	27.91644859
F28	COMB3	0	-881.024841	-8.68487263	22.28705978	0.051383469	8.310933113	-3.26235986
F28	COMB3	0.675000012	-883.746521	-8.68487263	22.28705978	0.051383469	-6.732831	2.599928856

F28	COMB3	1.350000024	-886.468079	-8.68487263	22.28705978	0.051383469	-21.7765942	8.462217331
F29	D	0	-939.221252	-1.02440727	0.153005674	-0.0070486	0.066402234	-0.67056334
F29	D	0.675000012	-941.813293	-1.02440727	0.153005674	-0.0070486	-0.03687659	0.020911487
F29	D	1.350000024	-944.405334	-1.02440727	0.153005674	-0.0070486	-0.1401554	0.71238631
F29	L	0	-290.800262	-0.91032052	0.066895366	-0.00228072	0.030845182	-0.69070524
F29	L	0.675000012	-290.800262	-0.91032052	0.066895366	-0.00228072	-0.01430919	-0.076239
F29	L	1.350000024	-290.800262	-0.91032052	0.066895366	-0.00228072	-0.05946356	0.53822726
F29	EX	0	12.63456917	-31.3724022	-0.45307875	0.04819221	-0.18447776	-14.5606451
F29	EX	0.675000012	12.63456917	-31.3724022	-0.45307875	0.04819221	0.121350333	6.615724087
F29	EX	1.350000024	12.63456917	-31.3724022	-0.45307875	0.04819221	0.427178442	27.79209328
F29	EY	0	-0.16104461	0.000422082	24.30394936	0.059671007	9.774817467	0.000217763
F29	EY	0.675000012	-0.16104461	0.000422082	24.30394936	0.059671007	-6.63034582	-6.7142E-05
F29	EY	1.350000024	-0.16104461	0.000422082	24.30394936	0.059671007	-23.0355072	-0.00035205
F29	COMB1	0	-1592.34595	-2.68580151	0.2906394	-0.01210746	0.129034966	-1.90980434
F29	COMB1	0.675000012	-1595.45642	-2.68580151	0.2906394	-0.01210746	-0.0671466	-0.09688861
F29	COMB1	1.350000024	-1598.56677	-2.68580151	0.2906394	-0.01210746	-0.26332816	1.71602726
F29	COMB2	0	-1064.75842	-33.8326797	7.368535519	0.060555853	2.967571735	-15.9918633
F29	COMB2	0.675000012	-1067.47998	-33.8326797	7.368535519	0.060555853	-2.00618911	6.845195293
F29	COMB2	1.350000024	-1070.20166	-33.8326797	7.368535519	0.060555853	-6.97994947	29.68225288
F29	COMB3	0	-1073.97363	-11.2442417	25.55815506	0.069715649	10.28488636	-5.50803804
F29	COMB3	0.675000012	-1076.69519	-11.2442417	25.55815506	0.069715649	-6.96686554	2.081824303
F29	COMB3	1.350000024	-1079.41687	-11.2442417	25.55815506	0.069715649	-24.2186165	9.671687126
F30	D	0	-865.017578	2.49672842	0.057803273	-0.00105177	0.047120489	1.558164954
F30	D	0.675000012	-862.425598	2.49672842	0.057803273	-0.00105177	0.008103282	-0.12712653
F30	D	1.350000024	-859.833496	2.49672842	0.057803273	-0.00105177	-0.03091392	-1.8124181
F30	L	0	-201.752975	-0.34629285	0.038704425	6.80097E-05	0.037176825	0.196477681
F30	L	0.675000012	-201.752975	-0.34629285	0.038704425	6.80097E-05	0.011051343	0.430225313
F30	L	1.350000024	-201.752975	-0.34629285	0.038704425	6.80097E-05	-0.01507414	0.663972974
F30	EX	0	-67.613266	16.51994324	-0.45663962	0.08159852	-0.43491378	22.21794891
F30	EX	0.675000012	-67.613266	16.51994324	-0.45663962	0.08159852	-0.1266821	11.06698895
F30	EX	1.350000024	-67.613266	16.51994324	-0.45663962	0.08159852	0.181549624	-0.08397125
F30	EY	0	-0.15205821	-0.00091161	25.49497223	0.020078516	24.13925934	-0.00044375
F30	EY	0.675000012	-0.15205821	-0.00091161	25.49497223	0.020078516	6.930155277	0.000171587
F30	EY	1.350000024	-0.15205821	-0.00091161	25.49497223	0.020078516	-10.2789488	0.000786924
F30	COMB1	0	-1360.82581	2.442005396	0.131291002	-0.00115331	0.116027512	2.184162378
F30	COMB1	0.675000012	-1357.71545	2.442005396	0.131291002	-0.00115331	0.027406087	0.535808682
F30	COMB1	1.350000024	-1354.60498	2.442005396	0.131291002	-0.00115331	-0.06121533	-1.11254489
F30	COMB2	0	-1041.84827	19.6103363	7.63117981	0.089696266	7.21491766	24.69340134
F30	COMB2	0.675000012	-1039.12671	19.6103363	7.63117981	0.089696266	2.063872576	11.45642567
F30	COMB2	1.350000024	-1036.40503	19.6103363	7.63117981	0.089696266	-3.08717299	-1.78054988
F30	COMB3	0	-993.278503	7.715307236	26.6987648	0.045703035	25.27041054	8.696151733
F30	COMB3	0.675000012	-990.556885	7.715307236	26.6987648	0.045703035	7.248747826	3.488319635
F30	COMB3	1.350000024	-987.835205	7.715307236	26.6987648	0.045703035	-10.7729158	-1.7195121
F31	D	0	-769.405457	2.652280569	-0.29389238	0.013575062	-0.19102836	2.066394091
F31	D	0.675000012	-771.997437	2.652280569	-0.29389238	0.013575062	0.007348971	0.276104867
F31	D	1.350000024	-774.589417	2.652280569	-0.29389238	0.013575062	0.205726311	-1.51418424
F31	L	0	-106.887756	-0.37742582	0.139531255	0.002361965	0.050432768	-0.5961839
F31	L	0.675000012	-106.887756	-0.37742582	0.139531255	0.002361965	-0.04375082	-0.34142146
F31	L	1.350000024	-106.887756	-0.37742582	0.139531255	0.002361965	-0.13793442	-0.08665907
F31	EX	0	67.51639557	-16.2603931	0.449759394	0.009020057	0.178742945	-0.0142391
F31	EX	0.675000012	67.51639557	-16.2603931	0.449759394	0.009020057	-0.1248446	10.96152401
F31	EX	1.350000024	67.51639557	-16.2603931	0.449759394	0.009020057	-0.42843214	21.93728828
F31	EY	0	-0.82880032	-0.00078773	25.30922508	-0.02033537	10.1374054	-0.00053181
F31	EY	0.675000012	-0.82880032	-0.00078773	25.30922508	-0.02033537	-6.94631958	-9.1008E-08
F31	EY	1.350000024	-0.82880032	-0.00078773	25.30922508	-0.02033537	-24.0300446	0.000531627
F31	COMB1	0	-1094.30688	2.578855276	-0.12942086	0.020069217	-0.14854161	1.52577877
F31	COMB1	0.675000012	-1097.41736	2.578855276	-0.12942086	0.020069217	-0.06118255	-0.21494852
F31	COMB1	1.350000024	-1100.52771	2.578855276	-0.12942086	0.020069217	0.026176501	-1.9556756
F31	COMB2	0	-771.926941	-14.1637487	8.173272133	0.01792795	3.193588018	1.967010856
F31	COMB2	0.675000012	-774.64856	-14.1637487	8.173272133	0.01792795	-2.32336998	11.52753925
F31	COMB2	1.350000024	-777.370117	-14.1637487	8.173272133	0.01792795	-7.84032774	21.08806992
F31	COMB3	0	-821.147949	-2.45684552	26.45172691	-0.00351299	10.51588631	1.976872206
F31	COMB3	0.675000012	-823.869507	-2.45684552	26.45172691	-0.00351299	-7.33902645	3.635242224
F31	COMB3	1.350000024	-826.591125	-2.45684552	26.45172691	-0.00351299	-25.1939392	5.293612957
F32	D	0	-932.206543	1.26632452	0.521978974	0.013803657	0.20508261	1.006934524
F32	D	0.675000012	-934.798523	1.26632452	0.521978974	0.013803657	-0.14725313	0.152165622
F32	D	1.350000024	-937.390503	1.26632452	0.521978974	0.013803657	-0.49958888	-0.70260334
F32	L	0	-229.963181	1.050588012	0.275741547	0.00331085	0.112119652	0.923633099
F32	L	0.675000012	-229.963181	1.050588012	0.275741547	0.00331085	-0.07400587	0.214486182
F32	L	1.350000024	-229.963181	1.050588012	0.275741547	0.00331085	-0.26013139	-0.49466071
F32	EX	0	-13.5283918	-30.7672195	0.457686454	0.010728636	0.189071879	-14.2682447
F32	EX	0.675000012	-13.5283918	-30.7672195	0.457686454	0.010728636	-0.11986642	6.499625206
F32	EX	1.350000024	-13.5283918	-30.7672195	0.457686454	0.010728636	-0.42880473	27.26749611
F32	EY	0	-0.80931664	-0.00056989	24.14888573	-0.05693821	9.656002045	-0.00030082
F32	EY	0.675000012	-0.80931664	-0.00056989	24.14888573	-0.05693821	-6.6444931	8.38496E-05
F32	EY	1.350000024	-0.80931664	-0.00056989	24.14888573	-0.05693821	-22.9449883	0.000468524
F32	COMB1	0	-1486.58887	3.200530291	1.067561269	0.021861751	0.425490588	2.686134338
F32	COMB1	0.675000012	-1489.69934	3.200530291	1.067561269	0.021861751	-0.29511315	0.525776625
F32	COMB1	1.350000024	-1492.80969	3.200530291	1.067561269	0.021861751	-1.01571691	-1.63458109
F32	COMB2	0	-1065.51208	-30.1836758	8.715540886	0.00870536	3.487984657	-13.4195032
F32	COMB2	0.675000012	-1068.23364	-30.1836758	8.715540886	0.00870536	-2.39500475	6.95447588
F32	COMB2	1.350000024	-1070.9552	-30.1836758	8.715540886	0.00870536	-8.27799416	27.32845497
F32	COMB3	0	-1056.36646	-8.03169632	26.13543701	-0.04086884	10.44901466	-3.14658737
F32	COMB3	0.675000012	-1059.08801	-8.03169632	26.13543701	-0.04086884	-7.19240332	2.274807215

F32	COMB3	1.350000024	-1061.80969	-8.03169632	26.13543701	-0.04086884	-24.8338223	7.696201801
F33	D	0	-857.677002	-0.33999184	0.832421601	0.003651699	0.344601572	-0.3697564
F33	D	0.675000012	-860.268982	-0.33999184	0.832421601	0.003651699	-0.21728292	-0.14026193
F33	D	1.350000024	-862.861023	-0.33999184	0.832421601	0.003651699	-0.77916741	0.089232534
F33	L	0	-225.839172	-0.14508295	0.409344345	0.001557045	0.179780126	-0.13853376
F33	L	0.675000012	-225.839172	-0.14508295	0.409344345	0.001557045	-0.09652726	-0.04060277
F33	L	1.350000024	-225.839172	-0.14508295	0.409344345	0.001557045	-0.37283465	0.057328209
F33	EX	0	0.374264926	-28.6803036	0.486673474	-0.007139	0.217394501	-12.4116697
F33	EX	0.675000012	0.374264926	-28.6803036	0.486673474	-0.007139	-0.11111005	6.947533131
F33	EX	1.350000024	0.374264926	-28.6803036	0.486673474	-0.007139	-0.43961462	26.30673599
F33	EY	0	-0.85377842	-0.00014843	21.70951653	-0.04004508	8.524315834	-7.2017E-06
F33	EY	0.675000012	-0.85377842	-0.00014843	21.70951653	-0.04004508	-6.12960625	9.29879E-05
F33	EY	1.350000024	-0.85377842	-0.00014843	21.70951653	-0.04004508	-20.7835293	0.000193177
F33	COMB1	0	-1390.55505	-0.64012289	1.653856874	0.00687331	0.701170087	-0.6653617
F33	COMB1	0.675000012	-1393.66553	-0.64012289	1.653856874	0.00687331	-0.41518313	-0.23327875
F33	COMB1	1.350000024	-1396.77588	-0.64012289	1.653856874	0.00687331	-1.53153634	0.19880417
F33	COMB2	0	-971.581787	-30.086853	8.345191002	-0.01567831	3.328625202	-13.2779627
F33	COMB2	0.675000012	-974.303345	-30.086853	8.345191002	-0.01567831	-2.30437803	7.030661106
F33	COMB2	1.350000024	-977.024963	-30.086853	8.345191002	-0.01567831	-7.93738174	27.3392849
F33	COMB3	0	-972.47876	-9.43714333	23.95128059	-0.03997136	9.437473297	-4.34156609
F33	COMB3	0.675000012	-975.200378	-9.43714333	23.95128059	-0.03997136	-6.72963953	2.028505564
F33	COMB3	1.350000024	-977.921936	-9.43714333	23.95128059	-0.03997136	-22.8967533	8.39857769
F34	D	0	-857.027954	0.126387849	0.828979254	-0.0035102	0.342746258	0.259346873
F34	D	0.675000012	-859.619934	0.126387849	0.828979254	-0.0035102	-0.21681471	0.174035072
F34	D	1.350000024	-862.211975	0.126387849	0.828979254	-0.0035102	-0.77637571	0.088723294
F34	L	0	-228.167786	0.111841351	0.413684517	-0.00039318	0.181033745	0.200164497
F34	L	0.675000012	-228.167786	0.111841351	0.413684517	-0.00039318	-0.09820328	0.124671593
F34	L	1.350000024	-228.167786	0.111841351	0.413684517	-0.00039318	-0.37744027	0.049178682
F34	EX	0	-0.75571829	-28.5723076	-0.49191394	-0.00687738	-0.21947116	-12.3656149
F34	EX	0.675000012	-0.75571829	-28.5723076	-0.49191394	-0.00687738	0.112570718	6.920690536
F34	EX	1.350000024	-0.75571829	-28.5723076	-0.49191394	-0.00687738	0.444612592	26.20699692
F34	EY	0	-0.85381597	0.000148437	21.7113266	0.040063545	8.525431633	7.39068E-06
F34	EY	0.675000012	-0.85381597	0.000148437	21.7113266	0.040063545	-6.1297121	-9.2804E-05
F34	EY	1.350000024	-0.85381597	0.000148437	21.7113266	0.040063545	-20.7848549	-0.000193
F34	COMB1	0	-1393.50195	0.330611587	1.656670332	-0.00484132	0.70094949	0.631479442
F34	COMB1	0.675000012	-1396.61243	0.330611587	1.656670332	-0.00484132	-0.41730291	0.408316642
F34	COMB1	1.350000024	-1399.72278	0.330611587	1.656670332	-0.00484132	-1.53555524	0.185153842
F34	COMB2	0	-972.803284	-29.4043541	7.330675602	0.001692374	2.875267506	-12.4630432
F34	COMB2	0.675000012	-975.524902	-29.4043541	7.330675602	0.001692374	-2.07293797	7.384893894
F34	COMB2	1.350000024	-978.246521	-29.4043541	7.330675602	0.001692374	-7.02114344	27.23283195
F34	COMB3	0	-972.886719	-8.83218384	23.64267921	0.036090791	9.299478531	-3.55979514
F34	COMB3	0.675000012	-975.608337	-8.83218384	23.64267921	0.036090791	-6.65932751	2.401928425
F34	COMB3	1.350000024	-978.330017	-8.83218384	23.64267921	0.036090791	-22.6181335	8.363652229
F35	D	0	-935.079163	-1.21222532	0.522666395	-0.01220046	0.202930853	-0.85676265
F35	D	0.675000012	-937.671143	-1.21222532	0.522666395	-0.01220046	-0.14986891	-0.03851063
F35	D	1.350000024	-940.263123	-1.21222532	0.522666395	-0.01220046	-0.50266868	0.779741406
F35	L	0	-289.432129	-0.97145683	0.343366355	-0.00162128	0.137752265	-0.75330943
F35	L	0.675000012	-289.432129	-0.97145683	0.343366355	-0.00162128	-0.09402001	-0.09757616
F35	L	1.350000024	-289.432129	-0.97145683	0.343366355	-0.00162128	-0.32579228	0.558157146
F35	EX	0	12.95002651	-30.391634	-0.45861024	0.011029031	-0.18965788	-14.0809727
F35	EX	0.675000012	12.95002651	-30.391634	-0.45861024	0.011029031	0.119903997	6.433379173
F35	EX	1.350000024	12.95002651	-30.391634	-0.45861024	0.011029031	0.42946589	26.94773102
F35	EY	0	-0.80931973	0.000568723	24.14905548	0.056920141	9.656097412	0.00030015
F35	EY	0.675000012	-0.80931973	0.000568723	24.14905548	0.056920141	-6.64451408	-8.3738E-05
F35	EY	1.350000024	-0.80931973	0.000568723	24.14905548	0.056920141	-22.9451256	-0.00046763
F35	COMB1	0	-1585.1864	-3.00900126	1.176585793	-0.0172346	0.463920653	-2.23341036
F35	COMB1	0.675000012	-1588.29675	-3.00900126	1.176585793	-0.0172346	-0.3302747	-0.20233461
F35	COMB1	1.350000024	-1591.40723	-3.00900126	1.176585793	-0.0172346	-1.12447	1.828741074
F35	COMB2	0	-1059.85596	-33.034008	7.789250851	0.016023709	3.101844072	-15.7106056
F35	COMB2	0.675000012	-1062.57751	-33.034008	7.789250851	0.016023709	-2.1559	6.587348461
F35	COMB2	1.350000024	-1065.29907	-33.034008	7.789250851	0.016023709	-7.41364384	28.88530159
F35	COMB3	0	-1069.77478	-11.1516132	25.8690052	0.04991911	10.33562946	-5.57208443
F35	COMB3	0.675000012	-1072.49634	-11.1516132	25.8690052	0.04991911	-7.12594843	1.955253959
F35	COMB3	1.350000024	-1075.21802	-11.1516132	25.8690052	0.04991911	-24.5875263	9.482591629
F36	D	0	-857.417175	-2.44902539	-0.19651489	-0.01150241	-0.15249269	-1.77033687
F36	D	0.675000012	-860.009155	-2.44902539	-0.19651489	-0.01150241	-0.01984516	-0.11724513
F36	D	1.350000024	-862.601196	-2.44902539	-0.19651489	-0.01150241	0.112802379	1.53584671
F36	L	0	-201.474319	0.365588635	0.246217713	-0.00133723	0.091056727	0.678744197
F36	L	0.675000012	-201.474319	0.365588635	0.246217713	-0.00133723	-0.07514022	0.431971908
F36	L	1.350000024	-201.474319	0.365588635	0.246217713	-0.00133723	-0.24133714	0.185199618
F36	EX	0	-66.5570602	-15.9956093	-0.44061771	0.010323471	-0.17492299	-0.05272299
F36	EX	0.675000012	-66.5570602	-15.9956093	-0.44061771	0.010323471	0.122493923	10.74431133
F36	EX	1.350000024	-66.5570602	-15.9956093	-0.44061771	0.010323471	0.419910818	21.5413475
F36	EY	0	-0.82880217	0.0007872	25.30922699	0.020335466	10.13740349	0.000531717
F36	EY	0.675000012	-0.82880217	0.0007872	25.30922699	0.020335466	-6.94632339	3.56761E-07
F36	EY	1.350000024	-0.82880217	0.0007872	25.30922699	0.020335466	-24.0300503	-0.000531
F36	COMB1	0	-1351.25952	-2.35388851	0.158130482	-0.01594247	-0.03730046	-1.03841352
F36	COMB1	0.675000012	-1354.36987	-2.35388851	0.158130482	-0.01594247	-0.14403853	0.550460875
F36	COMB1	1.350000024	-1357.48035	-2.35388851	0.158130482	-0.01594247	-0.25077659	2.139335394
F36	COMB2	0	-1032.90015	-19.0115242	7.387585163	0.004591702	2.880802393	-1.69945014
F36	COMB2	0.675000012	-1035.6217	-19.0115242	7.387585163	0.004591702	-2.10581732	11.13332653
F36	COMB2	1.350000024	-1038.34326	-19.0115242	7.387585163	0.004591702	-7.09243679	23.9661026
F36	COMB3	0	-985.588196	-7.49410629	26.30711174	0.01210537	10.45773792	-1.66109872
F36	COMB3	0.675000012	-988.309753	-7.49410629	26.30711174	0.01210537	-7.29956055	3.397422314

F40	COMB3	1.350000024	-991.277954	-8.79311657	27.7627697	0.034052536	-24.6096249	8.311630249
F41	D	0	-956.248535	-1.06187642	2.253246546	-0.01316404	1.632436514	-0.73085946
F41	D	0.675000012	-958.840576	-1.06187642	2.253246546	-0.01316404	0.111495152	-0.01409298
F41	D	1.350000024	-961.432617	-1.06187642	2.253246546	-0.01316404	-1.40944624	0.702673495
F41	L	0	-296.443573	-0.95631397	1.942787409	-0.00107891	1.501631141	-0.74269521
F41	L	0.675000012	-296.443573	-0.95631397	1.942787409	-0.00107891	0.190249801	-0.09718335
F41	L	1.350000024	-296.443573	-0.95631397	1.942787409	-0.00107891	-1.12113154	0.548328519
F41	EX	0	12.83872128	-30.2108574	-0.50029135	0.004676941	-0.22720927	-13.994628
F41	EX	0.675000012	12.83872128	-30.2108574	-0.50029135	0.004676941	0.110487357	6.397698402
F41	EX	1.350000024	12.83872128	-30.2108574	-0.50029135	0.004676941	0.448184013	26.79002571
F41	EY	0	8.18420887	-0.00492993	25.72781563	0.053196125	11.12091255	-0.00371952
F41	EY	0.675000012	8.18420887	-0.00492993	25.72781563	0.053196125	-6.2453599	-0.00039182
F41	EY	1.350000024	8.18420887	-0.00492993	25.72781563	0.053196125	-23.6116333	0.002935877
F41	COMB1	0	-1621.80798	-2.80435395	5.812355995	-0.0175231	4.361533642	-2.06534362
F41	COMB1	0.675000012	-1624.91846	-2.80435395	5.812355995	-0.0175231	0.438193858	-0.17240493
F41	COMB1	1.350000024	-1628.02881	-2.80435395	5.812355995	-0.0175231	-3.48514605	1.720533848
F41	COMB2	0	-1081.57458	-32.6860008	10.56434727	0.007435321	5.454998016	-15.4869633
F41	COMB2	0.675000012	-1084.29626	-32.6860008	10.56434727	0.007435321	-1.67593539	6.576084137
F41	COMB2	1.350000024	-1087.01782	-32.6860008	10.56434727	0.007435321	-8.80686855	28.63913155
F41	COMB3	0	-1084.8031	-10.9378052	29.83450127	0.043167077	13.79245949	-5.41356468
F41	COMB3	0.675000012	-1087.52478	-10.9378052	29.83450127	0.043167077	-6.34582567	1.969453216
F41	COMB3	1.350000024	-1090.24634	-10.9378052	29.83450127	0.043167077	-26.4841118	9.352471352
F42	D	0	-879.059753	-2.74513531	-1.25148785	0.001532555	-1.07960403	-2.09019065
F42	D	0.675000012	-881.651794	-2.74513531	-1.25148785	0.001532555	-0.23484974	-0.2372244
F42	D	1.350000024	-884.243774	-2.74513531	-1.25148785	0.001532555	0.609904528	1.615741849
F42	L	0	-206.95163	0.355750293	1.509743571	-0.00072928	1.172324061	0.664204121
F42	L	0.675000012	-206.95163	0.355750293	1.509743571	-0.00072928	0.153247252	0.424072683
F42	L	1.350000024	-206.95163	0.355750293	1.509743571	-0.00072928	-0.86582959	0.183941245
F42	EX	0	-66.7276688	-15.9253883	-0.41404134	0.00374973	-0.1563011	-0.07414653
F42	EX	0.675000012	-66.7276688	-15.9253883	-0.41404134	0.00374973	0.123176768	10.67548847
F42	EX	1.350000024	-66.7276688	-15.9253883	-0.41404134	0.00374973	0.402654618	21.42512321
F42	EY	0	8.47089386	-0.00452325	26.94369125	0.019057525	11.65660381	-0.00322244
F42	EY	0.675000012	8.47089386	-0.00452325	26.94369125	0.019057525	-6.53038502	-0.00016924
F42	EY	1.350000024	8.47089386	-0.00452325	26.94369125	0.019057525	-24.7173748	0.002883955
F42	COMB1	0	-1385.99438	-2.724962	0.913804352	0.00067222	0.580193698	-1.44550216
F42	COMB1	0.675000012	-1389.10474	-2.724962	0.913804352	0.00067222	-0.03662409	0.393846989
F42	COMB1	1.350000024	-1392.21509	-2.724962	0.913804352	0.00067222	-0.65344197	2.233196259
F42	COMB2	0	-1054.59729	-19.2545319	7.220237255	0.01126355	2.745756626	-2.06323266
F42	COMB2	0.675000012	-1057.31897	-19.2545319	7.220237255	0.01126355	-2.12790251	10.93357468
F42	COMB2	1.350000024	-1060.04053	-19.2545319	7.220237255	0.01126355	-7.00156212	23.93038177
F42	COMB3	0	-1000.32733	-7.79157782	27.32196045	0.022571025	11.4258976	-2.01221561
F42	COMB3	0.675000012	-1003.04889	-7.79157782	27.32196045	0.022571025	-7.01642275	3.247098684
F42	COMB3	1.350000024	-1005.77051	-7.79157782	27.32196045	0.022571025	-25.458744	8.506412506
F43	D	0	-517.304077	-10.5532808	15.54108334	0.048961639	5.570744038	-3.8560226
F43	D	0.675000012	-514.712097	-10.5532808	15.54108334	0.048961639	-4.91948605	3.267441273
F43	D	1.350000024	-512.120117	-10.5532808	15.54108334	0.048961639	-15.4097157	10.39090538
F43	L	0	-69.81073	0.377852231	-0.3626335	0.012779769	0.123338833	-0.04671459
F43	L	0.675000012	-69.81073	0.377852231	-0.3626335	0.012779769	0.368116409	-0.30176482
F43	L	1.350000024	-69.81073	0.377852231	-0.3626335	0.012779769	0.612893999	-0.55681503
F43	EX	0	64.97019958	15.99676037	0.305366457	-0.02266934	0.358752221	21.60950851
F43	EX	0.675000012	64.97019958	15.99676037	0.305366457	-0.02266934	0.152629882	10.81169605
F43	EX	1.350000024	64.97019958	15.99676037	0.305366457	-0.02266934	-0.05349246	0.013884609
F43	EY	0	-48.6402397	0.013775741	14.33558655	-0.03361321	20.02240562	0.013386749
F43	EY	0.675000012	-48.6402397	0.013775741	14.33558655	-0.03361321	10.34588528	0.004088124
F43	EY	1.350000024	-48.6402397	0.013775741	14.33558655	-0.03361321	0.669365048	-0.0052105
F43	COMB1	0	-732.462036	-12.0593739	18.06908607	0.079201594	6.882234573	-4.70197058
F43	COMB1	0.675000012	-729.351685	-12.0593739	18.06908607	0.079201594	-5.31439734	3.438105822
F43	COMB1	1.350000024	-726.241272	-12.0593739	18.06908607	0.079201594	-17.5110283	11.57818222
F43	COMB2	0	-513.237183	5.599064827	21.03567123	0.021384424	12.56649876	18.30652046
F43	COMB2	0.675000012	-510.515594	5.599064827	21.03567123	0.021384424	-1.63257802	14.52715111
F43	COMB2	1.350000024	-507.794006	5.599064827	21.03567123	0.021384424	-15.8316545	10.74778366
F43	COMB3	0	-595.766296	-5.90847778	31.35246468	0.013000634	27.02466583	2.757512569
F43	COMB3	0.675000012	-593.044678	-5.90847778	31.35246468	0.013000634	5.861754417	6.745734215
F43	COMB3	1.350000024	-590.32312	-5.90847778	31.35246468	0.013000634	-15.301157	10.73395634
F44	D	0	-725.160156	-1.14190745	4.720696449	0.046498917	3.602303982	-0.95456302
F44	D	0.675000012	-727.752136	-1.14190745	4.720696449	0.046498917	0.41583398	-0.1837756
F44	D	1.350000024	-730.344116	-1.14190745	4.720696449	0.046498917	-2.77063584	0.587011814
F44	L	0	-150.449738	0.800111353	-0.63119054	0.009658921	-1.11919022	0.696606755
F44	L	0.675000012	-150.449738	0.800111353	-0.63119054	0.009658921	-0.69313675	0.156531647
F44	L	1.350000024	-150.449738	0.800111353	-0.63119054	0.009658921	-0.2670832	-0.38354343
F44	EX	0	-13.3235092	-30.2620716	0.253196031	0.006315194	-0.01530087	-14.0017748
F44	EX	0.675000012	-13.3235092	-30.2620716	0.253196031	0.006315194	-0.18620817	6.425120354
F44	EX	1.350000024	-13.3235092	-30.2620716	0.253196031	0.006315194	-0.35711548	26.85201645
F44	EY	0	-47.0237465	-0.03288601	13.64856052	-0.08225344	-0.68949938	-0.02477646
F44	EY	0.675000012	-47.0237465	-0.03288601	13.64856052	-0.08225344	-9.90227699	-0.00257841
F44	EY	1.350000024	-47.0237465	-0.03288601	13.64856052	-0.08225344	-19.1150532	0.019619644
F44	COMB1	0	-1110.91174	-0.09011074	4.654931068	0.071252979	2.532060385	-0.03090485
F44	COMB1	0.675000012	-1114.02222	-0.09011074	4.654931068	0.071252979	-0.61001801	0.029919896
F44	COMB1	1.350000024	-1117.13257	-0.09011074	4.654931068	0.071252979	-3.75209618	0.090744652
F44	COMB2	0	-837.41217	-32.2785683	9.319260597	0.032492816	3.196845531	-15.2825022
F44	COMB2	0.675000012	-840.133728	-32.2785683	9.319260597	0.032492816	-3.09365487	6.505530834
F44	COMB2	1.350000024	-842.855347	-32.2785683	9.319260597	0.032492816	-9.38415527	28.29356384
F44	COMB3	0	-862.381653	-10.5140505	19.16865158	-0.0325104	2.701080084	-5.21943426
F44	COMB3	0.675000012	-865.103271	-10.5140505	19.16865158	-0.0325104	-10.2377586	1.877548695

F44	COMB3	1.350000024	-867.82489	-10.5140505	19.16865158	-0.0325104	-23.1765957	8.974532127
F45	D	0	-668.818726	-0.34312844	4.417896271	-0.00290957	3.159374952	-0.25856707
F45	D	0.675000012	-671.410706	-0.34312844	4.417896271	-0.00290957	0.177295312	-0.0269554
F45	D	1.350000024	-674.002686	-0.34312844	4.417896271	-0.00290957	-2.8047843	0.204656273
F45	L	0	-146.094818	-0.09960724	-0.56458223	9.2179E-05	-1.09700763	-0.09387339
F45	L	0.675000012	-146.094818	-0.09960724	-0.56458223	9.2179E-05	-0.71591455	-0.02663851
F45	L	1.350000024	-146.094818	-0.09960724	-0.56458223	9.2179E-05	-0.33482161	0.040596358
F45	EX	0	-0.26406839	-28.2126637	0.292212129	-0.0222881	0.043959375	-12.1792841
F45	EX	0.675000012	-0.26406839	-28.2126637	0.292212129	-0.0222881	-0.15328379	6.864263058
F45	EX	1.350000024	-0.26406839	-28.2126637	0.292212129	-0.0222881	-0.35052696	25.90781021
F45	EY	0	-42.6222801	-0.02069529	12.21975422	-0.05972959	-0.93367112	-0.01697514
F45	EY	0.675000012	-42.6222801	-0.02069529	12.21975422	-0.05972959	-9.18200397	-0.00300582
F45	EY	1.350000024	-42.6222801	-0.02069529	12.21975422	-0.05972959	-17.4303379	0.010963501
F45	COMB1	0	-1036.33411	-0.57112569	4.398144245	-0.00334399	2.036037683	-0.46047792
F45	COMB1	0.675000012	-1039.44458	-0.57112569	4.398144245	-0.00334399	-0.93270892	-0.0749681
F45	COMB1	1.350000024	-1042.55493	-0.57112569	4.398144245	-0.00334399	-3.90145564	0.310541689
F45	COMB2	0	-761.978821	-29.5982876	8.612609863	-0.04490901	2.72317791	-12.911972
F45	COMB2	0.675000012	-764.700439	-29.5982876	8.612609863	-0.04490901	-3.09033298	7.066871166
F45	COMB2	1.350000024	-767.421997	-29.5982876	8.612609863	-0.04490901	-8.90384388	27.04571342
F45	COMB3	0	-793.116089	-9.30038071	17.38373756	-0.07276283	2.005278826	-4.15536404
F45	COMB3	0.675000012	-795.837708	-9.30038071	17.38373756	-0.07276283	-9.72874165	2.122392416
F45	COMB3	1.350000024	-798.559265	-9.30038071	17.38373756	-0.07276283	-21.4627628	8.400148392
F46	D	0	-668.492188	0.170785218	4.411580563	0.002360277	3.155047417	0.17746225
F46	D	0.675000012	-671.084229	0.170785218	4.411580563	0.002360277	0.177230775	0.062182236
F46	D	1.350000024	-673.676208	0.170785218	4.411580563	0.002360277	-2.80058599	-0.05309777
F46	L	0	-147.193466	0.020771353	-0.59294617	0.004695062	-1.13467038	0.098360032
F46	L	0.675000012	-147.193466	0.020771353	-0.59294617	0.004695062	-0.7344318	0.084339373
F46	L	1.350000024	-147.193466	0.020771353	-0.59294617	0.004695062	-0.33419314	0.070318714
F46	EX	0	-0.12535574	-28.1040783	-0.29586732	-0.01879413	-0.04398183	-12.1346416
F46	EX	0.675000012	-0.12535574	-28.1040783	-0.29586732	-0.01879413	0.155728593	6.835608959
F46	EX	1.350000024	-0.12535574	-28.1040783	-0.29586732	-0.01879413	0.355439007	25.80585861
F46	EY	0	-42.6223907	0.020700907	12.22077179	0.059747387	-0.9330976	0.016978083
F46	EY	0.675000012	-42.6223907	0.020700907	12.22077179	0.059747387	-9.18211746	0.003004972
F46	EY	1.350000024	-42.6223907	0.020700907	12.22077179	0.059747387	-17.4311371	-0.01096814
F46	COMB1	0	-1037.7002	0.23817642	4.345182896	0.010344431	1.970584393	0.370330751
F46	COMB1	0.675000012	-1040.81067	0.23817642	4.345182896	0.010344431	-0.96241391	0.209561676
F46	COMB1	1.350000024	-1043.92102	0.23817642	4.345182896	0.010344431	-3.89541197	0.048792612
F46	COMB2	0	-761.838501	-28.8953323	7.98870182	0.003325738	2.615931749	-12.3366871
F46	COMB2	0.675000012	-764.560181	-28.8953323	7.98870182	0.003325738	-2.77644157	7.167660236
F46	COMB2	1.350000024	-767.281738	-28.8953323	7.98870182	0.003325738	-8.16881466	26.67200661
F46	COMB3	0	-793.075745	-8.6451807	17.18399429	0.060771842	1.961771965	-3.58726645
F46	COMB3	0.675000012	-795.797363	-8.6451807	17.18399429	0.060771842	-9.63742256	2.248230219
F46	COMB3	1.350000024	-798.518982	-8.6451807	17.18399429	0.060771842	-21.2366161	8.083726883
F47	D	0	-726.433533	1.095290422	4.674640656	-0.03901934	3.544418335	0.995616496
F47	D	0.675000012	-729.025574	1.095290422	4.674640656	-0.03901934	0.389036059	0.256295562
F47	D	1.350000024	-731.617554	1.095290422	4.674640656	-0.03901934	-2.76634622	-0.4830254
F47	L	0	-178.636444	-0.82884055	-0.84137452	-0.00144742	-1.47911084	-0.64355952
F47	L	0.675000012	-178.636444	-0.82884055	-0.84137452	-0.00144742	-0.91118312	-0.08409218
F47	L	1.350000024	-178.636444	-0.82884055	-0.84137452	-0.00144742	-0.3432554	0.475375146
F47	EX	0	12.73432159	-29.8826561	-0.25837028	0.00857362	0.012601531	-13.8162756
F47	EX	0.675000012	12.73432159	-29.8826561	-0.25837028	0.00857362	0.187001467	6.354515076
F47	EX	1.350000024	12.73432159	-29.8826561	-0.25837028	0.00857362	0.361401379	26.5253067
F47	EY	0	-47.0237923	0.032888994	13.6486702	0.082236007	-0.68945497	0.024777565
F47	EY	0.675000012	-47.0237923	0.032888994	13.6486702	0.082236007	-9.9023056	0.002577498
F47	EY	1.350000024	-47.0237923	0.032888994	13.6486702	0.082236007	-19.1151562	-0.01962257
F47	COMB1	0	-1157.53857	-0.01179635	4.26336956	-0.04913909	1.886724591	0.165044606
F47	COMB1	0.675000012	-1160.64893	-0.01179635	4.26336956	-0.04913909	-0.99104977	0.173007175
F47	COMB1	1.350000024	-1163.7594	-0.01179635	4.26336956	-0.04913909	-3.86882401	0.18096976
F47	COMB2	0	-820.658203	-30.0292187	8.675257683	-0.00664821	3.051583529	-13.4493647
F47	COMB2	0.675000012	-823.379761	-30.0292187	8.675257683	-0.00664821	-2.80421472	6.820356369
F47	COMB2	1.350000024	-826.101379	-30.0292187	8.675257683	-0.00664821	-8.6600132	27.09007645
F47	COMB3	0	-864.389404	-8.48953342	18.89305687	0.047622245	2.535761118	-3.4834342
F47	COMB3	0.675000012	-867.110962	-8.48953342	18.89305687	0.047622245	-10.2170506	2.246999979
F47	COMB3	1.350000024	-869.832581	-8.48953342	18.89305687	0.047622245	-22.969862	7.977434158
F48	D	0	-554.190918	-10.4901285	15.25919056	-0.03843672	14.91377258	-10.243022
F48	D	0.675000012	-556.782898	-10.4901285	15.25919056	-0.03843672	4.61382103	-3.16218734
F48	D	1.350000024	-559.374939	-10.4901285	15.25919056	-0.03843672	-5.686131	3.918648243
F48	L	0	-114.953865	0.339948922	-0.68834865	-0.00925128	-1.17412853	0.601415277
F48	L	0.675000012	-114.953865	0.339948922	-0.68834865	-0.00925128	-0.70949322	0.371949792
F48	L	1.350000024	-114.953865	0.339948922	-0.68834865	-0.00925128	-0.24485792	0.142484322
F48	EX	0	-63.9963799	-15.7397041	-0.29485393	0.015590963	-0.05089977	-0.03988843
F48	EX	0.675000012	-63.9963799	-15.7397041	-0.29485393	0.015590963	0.148126617	10.58441067
F48	EX	1.350000024	-63.9963799	-15.7397041	-0.29485393	0.015590963	0.347153038	21.20871162
F48	EY	0	-48.6402588	0.013777415	14.33558559	0.033613719	-0.66937286	0.005210302
F48	EY	0.675000012	-48.6402588	0.013777415	14.33558559	0.033613719	-10.345892	-0.00408945
F48	EY	1.350000024	-48.6402588	0.013777415	14.33558559	0.033613719	-20.0224113	-0.01338921
F48	COMB1	0	-848.955322	-12.0442362	17.20967102	-0.06092612	16.01792145	-11.3293619
F48	COMB1	0.675000012	-852.065674	-12.0442362	17.20967102	-0.06092612	4.401396275	-3.19950509
F48	COMB1	1.350000024	-855.176086	-12.0442362	17.20967102	-0.06092612	-7.21512985	4.930352688
F48	COMB2	0	-699.668884	-27.1938038	20.01585579	-0.01654775	15.02607727	-10.6053705
F48	COMB2	0.675000012	-702.390442	-27.1938038	20.01585579	-0.01654775	1.515376806	7.750444889
F48	COMB2	1.350000024	-705.112061	-27.1938038	20.01585579	-0.01654775	-11.9953241	26.1062603
F48	COMB3	0	-689.342102	-15.8510914	30.76480675	-0.00306716	14.57073593	-10.5728216
F48	COMB3	0.675000012	-692.06366	-15.8510914	30.76480675	-0.00306716	-6.19550514	0.126663178

F51	EX	3.75	1.089681625	-0.78940707	-0.03108857	0.607019961	0.075642377	0.720609605
F51	EX	5	1.089681625	-0.78940707	-0.03108857	0.607019961	0.114503101	1.707368374
F51	EY	0	-14.2762184	15.24488735	0.001779233	-9.2783E-05	0.001839742	42.95199203
F51	EY	1.25	-14.2762184	15.24488735	0.001779233	-9.2783E-05	-0.0003843	23.89588165
F51	EY	2.5	-14.2762184	15.24488735	0.001779233	-9.2783E-05	-0.00260834	4.839772224
F51	EY	3.75	-14.2762184	15.24488735	0.001779233	-9.2783E-05	-0.00483238	-14.2163372
F51	EY	5	-14.2762184	15.24488735	0.001779233	-9.2783E-05	-0.00705643	-33.2724457
F51	COMB1	0	-2.60870838	-16.804039	-0.00440604	-0.06417611	-0.00945354	-11.2208643
F51	COMB1	1.25	-2.60870838	-8.16405582	-0.00440604	-0.06417611	-0.00394599	4.384195805
F51	COMB1	2.5	-2.60870838	0.475927144	-0.00440604	-0.06417611	0.001561554	9.189276695
F51	COMB1	3.75	-2.60870838	9.11591053	-0.00440604	-0.06417611	0.007069099	3.194377899
F51	COMB1	5	-2.60870838	17.75589371	-0.00440604	-0.06417611	0.012576645	-13.6005001
F51	COMB2	0	-5.43236923	-10.6098871	-0.0349386	0.569570601	-0.04910306	1.664593697
F51	COMB2	1.25	-5.43236923	-3.04990149	-0.0349386	0.569570601	-0.00542981	10.20196152
F51	COMB2	2.5	-5.43236923	4.510083675	-0.0349386	0.569570601	0.038243443	9.289348602
F51	COMB2	3.75	-5.43236923	12.07006931	-0.0349386	0.569570601	0.081916697	-1.07324719
F51	COMB2	5	-5.43236923	19.63005447	-0.0349386	0.569570601	0.125589952	-20.8858242
F51	COMB3	0	-16.7099609	1.163478374	-0.01124709	0.132448032	-0.01827422	34.84687042
F51	COMB3	1.25	-16.7099609	8.723464012	-0.01124709	0.132448032	-0.00421535	28.66752815
F51	COMB3	2.5	-16.7099609	16.28344917	-0.01124709	0.132448032	0.009843516	13.03820801
F51	COMB3	3.75	-16.7099609	23.84343529	-0.01124709	0.132448032	0.023902383	-12.0410938
F51	COMB3	5	-16.7099609	31.40341949	-0.01124709	0.132448032	0.037961252	-46.5703773
F52	D	0	-4.31565905	-14.3859472	-0.00105329	0.000389502	-0.00268265	-8.76746178
F52	D	1.25	-4.31565905	-7.18596077	-0.00105329	0.000389502	-0.00136604	4.714981079
F52	D	2.5	-4.31565905	0.014025089	-0.00105329	0.000389502	-4.9431E-05	9.197441101
F52	D	3.75	-4.31565905	7.214011192	-0.00105329	0.000389502	0.001267181	4.679917812
F52	D	5	-4.31565905	14.41399765	-0.00105329	0.000389502	0.002583793	-8.83758736
F52	L	0	0.001836736	0.012665107	-0.00081729	0.001144268	-0.00170267	0.030989328
F52	L	1.25	0.001836736	0.012665107	-0.00081729	0.001144268	-0.00068105	0.015157945
F52	L	2.5	0.001836736	0.012665107	-0.00081729	0.001144268	0.000340564	-0.00067344
F52	L	3.75	0.001836736	0.012665107	-0.00081729	0.001144268	0.001362181	-0.01650483
F52	L	5	0.001836736	0.012665107	-0.00081729	0.001144268	0.002383799	-0.03233621
F52	EX	0	0.00163586	3.808907509	-0.27084172	0.155974671	-0.67656523	9.522367477
F52	EX	1.25	0.00163586	3.808907509	-0.27084172	0.155974671	-0.33801305	4.761232853
F52	EX	2.5	0.00163586	3.808907509	-0.27084172	0.155974671	0.000539119	9.79809E-05
F52	EX	3.75	0.00163586	3.808907509	-0.27084172	0.155974671	0.339091271	-4.76103687
F52	EX	5	0.00163586	3.808907509	-0.27084172	0.155974671	0.677643418	-9.52217197
F52	EY	0	-0.01494505	9.26364E-06	-0.00018353	-8.8405E-05	-0.00456796	0.0004554
F52	EY	1.25	-0.01494505	9.26364E-06	-0.00018353	-8.8405E-05	-0.00433855	0.000443821
F52	EY	2.5	-0.01494505	9.26364E-06	-0.00018353	-8.8405E-05	-0.00410913	0.000432241
F52	EY	3.75	-0.01494505	9.26364E-06	-0.00018353	-8.8405E-05	-0.00387972	0.000420662
F52	EY	5	-0.01494505	9.26364E-06	-0.00018353	-8.8405E-05	-0.00365031	0.000409082
F52	COMB1	0	-5.1758523	-17.2428722	-0.00257162	0.002298231	-0.00594346	-10.4713717
F52	COMB1	1.25	-5.1758523	-8.60288906	-0.00257162	0.002298231	-0.00272894	5.682229996
F52	COMB1	2.5	-5.1758523	0.03709428	-0.00257162	0.002298231	0.000485585	11.03585148
F52	COMB1	3.75	-5.1758523	8.677077293	-0.00257162	0.002298231	0.003700108	5.589493752
F52	COMB1	5	-5.1758523	17.31706047	-0.00257162	0.002298231	0.00691463	-10.6568422
F52	COMB2	0	-4.53387833	-11.1590328	-0.28174239	0.162175357	-0.70503706	0.659719944
F52	COMB2	1.25	-4.53387833	-3.59904742	-0.28174239	0.162175357	-0.35285902	9.883520126
F52	COMB2	2.5	-4.53387833	3.960937977	-0.28174239	0.162175357	-0.00068101	9.657338142
F52	COMB2	3.75	-4.53387833	11.52092361	-0.28174239	0.162175357	0.351496994	-0.01882553
F52	COMB2	5	-4.53387833	19.08090973	-0.28174239	0.162175357	0.703674972	-19.1449718
F52	COMB3	0	-4.54604053	-13.9014397	-0.08687125	0.049808618	-0.22126752	-6.19604969
F52	COMB3	1.25	-4.54604053	-6.34145403	-0.08687125	0.049808618	-0.11267846	6.455759048
F52	COMB3	2.5	-4.54604053	1.218531489	-0.08687125	0.049808618	-0.00408939	9.657586098
F52	COMB3	3.75	-4.54604053	8.778516769	-0.08687125	0.049808618	0.104499675	3.409430027
F52	COMB3	5	-4.54604053	16.33850288	-0.08687125	0.049808618	0.213088736	-12.2887068
F53	D	0	-1.43314636	-11.7075253	0.000688542	0.003761175	-0.00092887	-9.55132008
F53	D	1	-1.43314636	-5.94753695	0.000688542	0.003761175	-0.00161741	-0.72379053
F53	D	2	-1.43314636	-0.1875487	0.000688542	0.003761175	-0.00230595	2.343751907
F53	D	3	-1.43314636	5.572439194	0.000688542	0.003761175	-0.00299449	-0.34869319
F53	D	4	-1.43314636	11.33242702	0.000688542	0.003761175	-0.00368304	-8.80112648
F53	L	0	-0.46871909	-0.11544202	-0.00119779	0.00147191	-0.00372805	-0.44022015
F53	L	1	-0.46871909	-0.11544202	-0.00119779	0.00147191	-0.00253026	-0.32477814
F53	L	2	-0.46871909	-0.11544202	-0.00119779	0.00147191	-0.00133247	-0.20933615
F53	L	3	-0.46871909	-0.11544202	-0.00119779	0.00147191	-0.00013468	-0.09389414
F53	L	4	-0.46871909	-0.11544202	-0.00119779	0.00147191	0.001063108	0.021547869
F53	EX	0	-1.4015063	-0.90625459	-0.1717899	1.088780642	-0.62712157	-1.86561918
F53	EX	1	-1.4015063	-0.90625459	-0.1717899	1.088780642	-0.45533171	-0.95936465
F53	EX	2	-1.4015063	-0.90625459	-0.1717899	1.088780642	-0.28354186	-0.05311018
F53	EX	3	-1.4015063	-0.90625459	-0.1717899	1.088780642	-0.11175199	0.853144288
F53	EX	4	-1.4015063	-0.90625459	-0.1717899	1.088780642	0.060037885	1.759398818
F53	EY	0	-10.5260468	-12.7824478	0.014062135	0.000973614	0.04320319	-23.9645119
F53	EY	1	-10.5260468	-12.7824478	0.014062135	0.000973614	0.029141055	-11.182066
F53	EY	2	-10.5260468	-12.7824478	0.014062135	0.000973614	0.015078923	1.600381017
F53	EY	3	-10.5260468	-12.7824478	0.014062135	0.000973614	0.001016789	14.38282776
F53	EY	4	-10.5260468	-12.7824478	0.014062135	0.000973614	-0.01304534	27.16527557
F53	COMB1	0	-2.46972609	-14.233737	-0.00109021	0.006868465	-0.00707952	-12.1659365
F53	COMB1	1	-2.46972609	-7.32175159	-0.00109021	0.006868465	-0.00598931	-1.38819361
F53	COMB1	2	-2.46972609	-0.40976566	-0.00109021	0.006868465	-0.0048991	2.477564335
F53	COMB1	3	-2.46972609	6.502219677	-0.00109021	0.006868465	-0.00380888	-0.56866246
F53	COMB1	4	-2.46972609	13.41420555	-0.00109021	0.006868465	-0.00271867	-10.5268745
F53	COMB2	0	-6.41871405	-17.2937107	-0.17302731	1.131607533	-0.63761151	-19.6472931
F53	COMB2	1	-6.41871405	-11.2457228	-0.17302731	1.131607533	-0.4645842	-5.37757826

F53	COMB2	2	-6.41871405	-5.19773483	-0.17302731	1.131607533	-0.29155695	2.84414959
F53	COMB2	3	-6.41871405	0.85025239	-0.17302731	1.131607533	-0.11852966	5.017890453
F53	COMB2	4	-6.41871405	6.898240089	-0.17302731	1.131607533	0.054497618	1.143644571
F53	COMB3	0	-13.1462736	-26.0363064	-0.03900291	0.34840107	-0.1543296	-35.9179649
F53	COMB3	1	-13.1462736	-19.9883194	-0.03900291	0.34840107	-0.1153267	-12.905654
F53	COMB3	2	-13.1462736	-13.9403305	-0.03900291	0.34840107	-0.0763238	4.05866909
F53	COMB3	3	-13.1462736	-7.89234352	-0.03900291	0.34840107	-0.03732089	14.97500515
F53	COMB3	4	-13.1462736	-1.84435606	-0.03900291	0.34840107	0.001682013	19.84335518
F54	D	0	-1.42412961	-11.3381748	-0.00126787	0.003490234	-0.00356064	-8.81173801
F54	D	1	-1.42412961	-5.57818651	-0.00126787	0.003490234	-0.00229278	-0.35355866
F54	D	2	-1.42412961	0.181801647	-0.00126787	0.003490234	-0.00102491	2.344633341
F54	D	3	-1.42412961	5.941790104	-0.00126787	0.003490234	0.000242953	-0.71716195
F54	D	4	-1.42412961	11.70177841	-0.00126787	0.003490234	0.001510818	-9.53894424
F54	L	0	-0.45929471	0.110670246	0.000364181	0.006371772	0.000227615	0.007092569
F54	L	1	-0.45929471	0.110670246	0.000364181	0.006371772	-0.00013657	-0.10357766
F54	L	2	-0.45929471	0.110670246	0.000364181	0.006371772	-0.00050075	-0.2142479
F54	L	3	-0.45929471	0.110670246	0.000364181	0.006371772	-0.00086493	-0.32491812
F54	L	4	-0.45929471	0.110670246	0.000364181	0.006371772	-0.00122911	-0.43558836
F54	EX	0	1.409529448	-0.90952551	-0.16831072	1.087923884	-0.05690297	-1.76701999
F54	EX	1	1.409529448	-0.90952551	-0.16831072	1.087923884	0.111407727	-0.85749453
F54	EX	2	1.409529448	-0.90952551	-0.16831072	1.087923884	0.279718399	0.052030914
F54	EX	3	1.409529448	-0.90952551	-0.16831072	1.087923884	0.448029101	0.961556375
F54	EX	4	1.409529448	-0.90952551	-0.16831072	1.087923884	0.616339803	1.871081829
F54	EY	0	-10.5144176	12.78331757	-0.01382597	-0.00098193	-0.01259472	27.16694641
F54	EY	1	-10.5144176	12.78331757	-0.01382597	-0.00098193	0.001231244	14.3836298
F54	EY	2	-10.5144176	12.78331757	-0.01382597	-0.00098193	0.015057208	1.600313783
F54	EY	3	-10.5144176	12.78331757	-0.01382597	-0.00098193	0.028883172	-11.1830025
F54	EY	4	-10.5144176	12.78331757	-0.01382597	-0.00098193	0.042709138	-23.96632
F54	COMB1	0	-2.44382715	-13.4287367	-0.00093875	0.014383117	-0.00390859	-10.5627375
F54	COMB1	1	-2.44382715	-6.51675129	-0.00093875	0.014383117	-0.00296984	-0.58999461
F54	COMB1	2	-2.44382715	0.395234376	-0.00093875	0.014383117	-0.00203109	2.470763445
F54	COMB1	3	-2.44382715	7.307220459	-0.00093875	0.014383117	-0.00109234	-1.38046336
F54	COMB1	4	-2.44382715	14.21920586	-0.00093875	0.014383117	-0.00015359	-12.1436749
F54	COMB2	0	-3.49319267	-8.78483582	-0.17977332	1.13136375	-0.06652889	-2.52136827
F54	COMB2	1	-3.49319267	-2.73684835	-0.17977332	1.13136375	0.113244407	3.239472866
F54	COMB2	2	-3.49319267	3.311138868	-0.17977332	1.13136375	0.293017685	2.952327967
F54	COMB2	3	-3.49319267	9.359127045	-0.17977332	1.13136375	0.472790986	-3.38280416
F54	COMB2	4	-3.49319267	15.40711403	-0.17977332	1.13136375	0.652564287	-15.7659225
F54	COMB3	0	-12.2361507	1.265760899	-0.06875168	0.347336829	-0.03481587	18.71859169
F54	COMB3	1	-12.2361507	7.31374836	-0.06875168	0.347336829	0.033935808	14.42883682
F54	COMB3	2	-12.2361507	13.36173534	-0.06875168	0.347336829	0.102687478	4.091096401
F54	COMB3	3	-12.2361507	19.40972328	-0.06875168	0.347336829	0.171439141	-12.294632
F54	COMB3	4	-12.2361507	25.45771027	-0.06875168	0.347336829	0.240190834	-34.7283478
F55	D	0	-4.89158964	-14.3699284	-0.00230427	0.000672531	-0.00847481	-8.72687531
F55	D	1.25	-4.89158964	-7.16994238	-0.00230427	0.000672531	-0.00559446	4.735544205
F55	D	2.5	-4.89158964	0.03004363	-0.00230427	0.000672531	-0.00271412	9.197980881
F55	D	3.75	-4.89158964	7.230029583	-0.00230427	0.000672531	0.000166221	4.660434723
F55	D	5	-4.89158964	14.43001652	-0.00230427	0.000672531	0.003046563	-8.87709332
F55	L	0	0.012876109	0.029748799	-0.00164743	-0.00043263	-0.00524457	0.063930757
F55	L	1.25	0.012876109	0.029748799	-0.00164743	-0.00043263	-0.00318529	0.026744757
F55	L	2.5	0.012876109	0.029748799	-0.00164743	-0.00043263	-0.00112601	-0.01044124
F55	L	3.75	0.012876109	0.029748799	-0.00164743	-0.00043263	0.000933273	-0.04762724
F55	L	5	0.012876109	0.029748799	-0.00164743	-0.00043263	0.002992556	-0.08481324
F55	EX	0	-0.00842325	8.631363869	-0.81509632	0.18972978	-2.04026055	21.58021545
F55	EX	1.25	-0.00842325	8.631363869	-0.81509632	0.18972978	-1.02139008	10.79101086
F55	EX	2.5	-0.00842325	8.631363869	-0.81509632	0.18972978	-0.00251963	0.001805683
F55	EX	3.75	-0.00842325	8.631363869	-0.81509632	0.18972978	1.016350746	-10.7873993
F55	EX	5	-0.00842325	8.631363869	-0.81509632	0.18972978	2.0352211	-21.5766048
F55	EY	0	0.067994513	-8.1345E-06	-0.00022146	-0.00011	0.019446108	0.00431026
F55	EY	1.25	0.067994513	-8.1345E-06	-0.00022146	-0.00011	0.019722939	0.004320428
F55	EY	2.5	0.067994513	-8.1345E-06	-0.00022146	-0.00011	0.019999769	0.004330596
F55	EY	3.75	0.067994513	-8.1345E-06	-0.00022146	-0.00011	0.020276599	0.004340765
F55	EY	5	0.067994513	-8.1345E-06	-0.00022146	-0.00011	0.020553429	0.004350933
F55	COMB1	0	-5.84930611	-17.1963158	-0.00540101	0.000114828	-0.01856109	-10.3699617
F55	COMB1	1.25	-5.84930611	-8.55633259	-0.00540101	0.000114828	-0.01180982	5.725444794
F55	COMB1	2.5	-5.84930611	0.083650433	-0.00540101	0.000114828	-0.00505856	11.02087116
F55	COMB1	3.75	-5.84930611	8.723633766	-0.00540101	0.000114828	0.001692702	5.516318321
F55	COMB1	5	-5.84930611	17.36361694	-0.00540101	0.000114828	0.008443965	-10.7882137
F55	COMB2	0	-5.1194129	-6.14559507	-0.84663284	0.196905553	-2.11609459	13.19380093
F55	COMB2	1.25	-5.1194129	1.414389729	-0.84663284	0.196905553	-1.05780351	16.15080261
F55	COMB2	2.5	-5.1194129	8.974374771	-0.84663284	0.196905553	0.000487586	9.657823563
F55	COMB2	3.75	-5.1194129	16.53436089	-0.84663284	0.196905553	1.058778644	-6.28513622
F55	COMB2	5	-5.1194129	24.094347	-0.84663284	0.196905553	2.117069721	-31.6780796
F55	COMB3	0	-5.06337261	-12.3601828	-0.25992629	0.060219258	-0.63281423	-2.34078717
F55	COMB3	1.25	-5.06337261	-4.80019808	-0.25992629	0.060219258	-0.30790633	8.384450912
F55	COMB3	2.5	-5.06337261	2.75978756	-0.25992629	0.060219258	0.017001551	9.659706116
F55	COMB3	3.75	-5.06337261	10.31977272	-0.25992629	0.060219258	0.341909438	1.484981298
F55	COMB3	5	-5.06337261	17.87975883	-0.25992629	0.060219258	0.666817307	-16.1397266
F56	D	0	-4.12309694	-7.91717243	0.00353482	-0.83560282	0.028963907	0.058365032
F56	D	1	-4.12309694	-2.15718389	0.00353482	-0.83560282	0.025429087	5.095542431
F56	D	2	-4.12309694	3.602804184	0.00353482	-0.83560282	0.021894267	4.372732162
F56	D	3	-4.12309694	9.362792969	0.00353482	-0.83560282	0.018359447	-2.11006522
F56	D	4	-4.12309694	15.12277985	0.00353482	-0.83560282	0.014824628	-14.3528509
F56	L	0	-1.30507219	1.056204319	0.003765465	-0.02962301	0.016401146	2.591362

F56	L	1	-1.30507219	1.056204319	0.003765465	-0.02962301	0.012635682	1.535157681
F56	L	2	-1.30507219	1.056204319	0.003765465	-0.02962301	0.008870217	0.478953391
F56	L	3	-1.30507219	1.056204319	0.003765465	-0.02962301	0.005104752	-0.5772509
F56	L	4	-1.30507219	1.056204319	0.003765465	-0.02962301	0.001339288	-1.63345516
F56	EX	0	-2.28937197	-0.3626036	0.686613858	0.920858383	1.637167096	-0.57372242
F56	EX	1	-2.28937197	-0.3626036	0.686613858	0.920858383	0.950553298	-0.21111883
F56	EX	2	-2.28937197	-0.3626036	0.686613858	0.920858383	0.2639395	0.151484713
F56	EX	3	-2.28937197	-0.3626036	0.686613858	0.920858383	-0.4226743	0.514088273
F56	EX	4	-2.28937197	-0.3626036	0.686613858	0.920858383	-1.1092881	0.876691878
F56	EY	0	7.325650215	-13.7422123	-0.06797345	0.018387659	-0.2080424	-29.745142
F56	EY	1	7.325650215	-13.7422123	-0.06797345	0.018387659	-0.14006896	-16.0029335
F56	EY	2	7.325650215	-13.7422123	-0.06797345	0.018387659	-0.07209551	-2.2607224
F56	EY	3	7.325650215	-13.7422123	-0.06797345	0.018387659	-0.00412207	11.48148727
F56	EY	4	7.325650215	-13.7422123	-0.06797345	0.018387659	0.063851371	25.22369766
F56	COMB1	0	-7.03583193	-7.81067991	0.010266528	-1.05012023	0.060998522	4.216217041
F56	COMB1	1	-7.03583193	-0.89869368	0.010266528	-1.05012023	0.050731994	8.570902824
F56	COMB1	2	-7.03583193	6.013291836	0.010266528	-1.05012023	0.040465467	6.013604164
F56	COMB1	3	-7.03583193	12.92527771	0.010266528	-1.05012023	0.030198939	-3.45567966
F56	COMB1	4	-7.03583193	19.83726311	0.010266528	-1.05012023	0.019932413	-19.8369503
F56	COMB2	0	-4.80226946	-12.6844177	0.694131434	0.072166331	1.664513111	-9.08596039
F56	COMB2	1	-4.80226946	-6.63643026	0.694131434	0.072166331	0.970381737	0.574462295
F56	COMB2	2	-4.80226946	-0.58844274	0.694131434	0.072166331	0.276250392	4.186898232
F56	COMB2	3	-4.80226946	5.459545135	0.694131434	0.072166331	-0.41788095	1.751347423
F56	COMB2	4	-4.80226946	11.50753212	0.694131434	0.072166331	-1.11201215	-6.73219109
F56	COMB3	0	2.23043108	-22.5238686	0.149808928	-0.57733679	0.332841575	-30.5355587
F56	COMB3	1	2.23043108	-16.4758816	0.149808928	-0.57733679	0.183032677	-11.0356874
F56	COMB3	2	2.23043108	-10.4278936	0.149808928	-0.57733679	0.033223752	2.416198492
F56	COMB3	3	2.23043108	-4.37990618	0.149808928	-0.57733679	-0.11658517	9.82009697
F56	COMB3	4	2.23043108	1.668080688	0.149808928	-0.57733679	-0.26639405	11.17600918
F57	D	0	-4.10664272	-15.1233835	-0.00151029	0.836047709	0.016815143	-14.3540411
F57	D	1	-4.10664272	-9.36339474	-0.00151029	0.836047709	0.018325433	-2.11065364
F57	D	2	-4.10664272	-3.60340714	-0.00151029	0.836047709	0.019835722	4.372746944
F57	D	3	-4.10664272	2.156580925	-0.00151029	0.836047709	0.02134601	5.096159935
F57	D	4	-4.10664272	7.916569233	-0.00151029	0.836047709	0.022856301	0.059585337
F57	L	0	-1.30974698	-1.08577466	-0.00555821	0.041037243	-0.00137041	-1.68149149
F57	L	1	-1.30974698	-1.08577466	-0.00555821	0.041037243	0.004187805	-0.59571701
F57	L	2	-1.30974698	-1.08577466	-0.00555821	0.041037243	0.009746018	0.490057528
F57	L	3	-1.30974698	-1.08577466	-0.00555821	0.041037243	0.015304231	1.575832129
F57	L	4	-1.30974698	-1.08577466	-0.00555821	0.041037243	0.020862443	2.66160655
F57	EX	0	2.293737411	-0.36801681	0.678620577	0.909504592	1.095070124	-0.88792419
F57	EX	1	2.293737411	-0.36801681	0.678620577	0.909504592	0.416449547	-0.51990741
F57	EX	2	2.293737411	-0.36801681	0.678620577	0.909504592	-0.262171	-0.15189061
F57	EX	3	2.293737411	-0.36801681	0.678620577	0.909504592	-0.94079155	0.216126174
F57	EX	4	2.293737411	-0.36801681	0.678620577	0.909504592	-1.61941206	0.584142923
F57	EY	0	7.345257759	13.74340343	0.068199024	-0.01838604	0.064336427	25.22590828
F57	EY	1	7.345257759	13.74340343	0.068199024	-0.01838604	-0.00386259	11.48250675
F57	EY	2	7.345257759	13.74340343	0.068199024	-0.01838604	-0.07206161	-2.26089501
F57	EY	3	7.345257759	13.74340343	0.068199024	-0.01838604	-0.14026064	-16.0042973
F57	EY	4	7.345257759	13.74340343	0.068199024	-0.01838604	-0.20845966	-29.7476959
F57	COMB1	0	-7.02356625	-19.8852997	-0.01070549	1.068916798	0.017985517	-19.9152355
F57	COMB1	1	-7.02356625	-12.9733133	-0.01070549	1.068916798	0.028691007	-3.4859314
F57	COMB1	2	-7.02356625	-6.06132793	-0.01070549	1.068916798	0.039396495	6.031388283
F57	COMB1	3	-7.02356625	0.850657642	-0.01070549	1.068916798	0.050101984	8.636723518
F57	COMB1	4	-7.02356625	7.762643814	-0.01070549	1.068916798	0.06080747	4.33007288
F57	COMB2	0	-0.03677059	-12.2732973	0.720518351	1.826322436	1.170887709	-8.57475404
F57	COMB2	1	-0.03677059	-6.22530937	0.720518351	1.826322436	0.450369418	0.675048351
F57	COMB2	2	-0.03677059	-0.17732194	0.720518351	1.826322436	-0.27014887	3.876363754
F57	COMB2	3	-0.03677059	5.87066555	0.720518351	1.826322436	-0.99066716	1.029692292
F57	COMB2	4	-0.03677059	11.91865349	0.720518351	1.826322436	-1.71118546	-7.86496592
F57	COMB3	0	3.710502625	-1.90692377	0.282037824	1.157965422	0.429724544	10.60609436
F57	COMB3	1	3.710502625	4.141064167	0.282037824	1.157965422	0.14768675	9.489024162
F57	COMB3	2	3.710502625	10.18905163	0.282037824	1.157965422	-0.13435104	2.323967218
F57	COMB3	3	3.710502625	16.23703957	0.282037824	1.157965422	-0.41638884	-10.8890762
F57	COMB3	4	3.710502625	22.28502655	0.282037824	1.157965422	-0.69842666	-30.1501064
F58	D	0	-2.00355458	-37.4335442	0.122588031	1.61896956	0.294635713	-24.7102776
F58	D	1.25	-2.00355458	-17.7335548	0.122588031	1.61896956	0.14140068	9.769159317
F58	D	2.5	-2.00355458	1.966431975	0.122588031	1.61896956	-0.01183437	19.62361336
F58	D	3.75	-2.00355458	21.66641808	0.122588031	1.61896956	-0.16506942	4.853079319
F58	D	5	-2.00355458	41.3664093	0.122588031	1.61896956	-0.31830448	-34.5424385
F58	L	0	1.605490565	-0.42927521	0.022670513	0.101800986	0.048689805	-1.3231405
F58	L	1.25	1.605490565	-0.42927521	0.022670513	0.101800986	0.02035166	-0.78654641
F58	L	2.5	1.605490565	-0.42927521	0.022670513	0.101800986	-0.00798649	-0.24995238
F58	L	3.75	1.605490565	-0.42927521	0.022670513	0.101800986	-0.03632463	0.286641657
F58	L	5	1.605490565	-0.42927521	0.022670513	0.101800986	-0.06466278	0.823235691
F58	EX	0	-6.05521631	16.25464821	-0.02125862	0.02370178	-0.11094369	44.34326172
F58	EX	1.25	-6.05521631	16.25464821	-0.02125862	0.02370178	-0.08437042	24.02494812
F58	EX	2.5	-6.05521631	16.25464821	-0.02125862	0.02370178	-0.05779715	3.706635714
F58	EX	3.75	-6.05521631	16.25464821	-0.02125862	0.02370178	-0.03122387	-16.6116772
F58	EX	5	-6.05521631	16.25464821	-0.02125862	0.02370178	-0.0046506	-36.9299889
F58	EY	0	0.045569982	0.01810256	-0.02698739	0.237507567	5.23359E-05	-0.00119943
F58	EY	1.25	0.045569982	0.01810256	-0.02698739	0.237507567	0.033786573	-0.02382763
F58	EY	2.5	0.045569982	0.01810256	-0.02698739	0.237507567	0.067520812	-0.04645583
F58	EY	3.75	0.045569982	0.01810256	-0.02698739	0.237507567	0.101255037	-0.06908403
F58	EY	5	0.045569982	0.01810256	-0.02698739	0.237507567	0.134989277	-0.09171223

F60	COMB3	5	-1.18981564	45.54169846	-0.10963348	0.03060881	0.210183427	-45.0038757
F61	D	0	-1.50551915	-39.72295	0.045833912	-0.07940674	0.09134037	-33.8446045
F61	D	1.25	-1.50551915	-20.0229607	0.045833912	-0.07940674	0.03404798	3.496590137
F61	D	2.5	-1.50551915	-0.32297459	0.045833912	-0.07940674	-0.02324441	16.21280098
F61	D	3.75	-1.50551915	19.37701225	0.045833912	-0.07940674	-0.08053681	4.304026604
F61	D	5	-1.50551915	39.07700348	0.045833912	-0.07940674	-0.1378292	-32.2297325
F61	L	0	0.970447779	-0.23618326	0.032476198	0.191434398	0.079670832	-0.46698293
F61	L	1.25	0.970447779	-0.23618326	0.032476198	0.191434398	0.039075583	-0.17175381
F61	L	2.5	0.970447779	-0.23618326	0.032476198	0.191434398	-0.00151966	0.123475291
F61	L	3.75	0.970447779	-0.23618326	0.032476198	0.191434398	-0.04211491	0.418704361
F61	L	5	0.970447779	-0.23618326	0.032476198	0.191434398	-0.08271015	0.713933527
F61	EX	0	1.055938721	12.72195339	-0.23186563	0.015108149	-0.7887516	32.14715576
F61	EX	1.25	1.055938721	12.72195339	-0.23186563	0.015108149	-0.49891961	16.24471283
F61	EX	2.5	1.055938721	12.72195339	-0.23186563	0.015108149	-0.20908757	0.342270941
F61	EX	3.75	1.055938721	12.72195339	-0.23186563	0.015108149	0.080744475	-15.5601721
F61	EX	5	1.055938721	12.72195339	-0.23186563	0.015108149	0.370576501	-31.4626122
F61	EY	0	0.070742689	0.158073634	-0.16423559	-1.74105537	-0.44708815	0.394059867
F61	EY	1.25	0.070742689	0.158073634	-0.16423559	-1.74105537	-0.24179365	0.196467802
F61	EY	2.5	0.070742689	0.158073634	-0.16423559	-1.74105537	-0.03649915	-0.00112425
F61	EY	3.75	0.070742689	0.158073634	-0.16423559	-1.74105537	0.168795362	-0.1987163
F61	EY	5	0.070742689	0.158073634	-0.16423559	-1.74105537	0.374089837	-0.39630836
F61	COMB1	0	-0.25390646	-48.045433	0.106962614	0.211006939	0.237081766	-41.3606987
F61	COMB1	1.25	-0.25390646	-24.405447	0.106962614	0.211006939	0.103378512	3.921102047
F61	COMB1	2.5	-0.25390646	-0.7654627	0.106962614	0.211006939	-0.03032476	19.65292168
F61	COMB1	3.75	-0.25390646	22.87452126	0.106962614	0.211006939	-0.16402802	5.834758759
F61	COMB1	5	-0.25390646	46.51450729	0.106962614	0.211006939	-0.29773128	-37.5333862
F61	COMB2	0	-0.15992351	-28.5664806	-0.23335953	-0.55587077	-0.83618701	-2.28749871
F61	COMB2	1.25	-0.15992351	-7.88149166	-0.23335953	-0.55587077	-0.5444876	20.49248314
F61	COMB2	2.5	-0.15992351	12.80349445	-0.23335953	-0.55587077	-0.25278819	17.41623116
F61	COMB2	3.75	-0.15992351	33.48847961	-0.23335953	-0.55587077	0.038911235	-11.5162544
F61	COMB2	5	-0.15992351	54.17346954	-0.23335953	-0.55587077	0.330610633	-66.3049698
F61	COMB3	0	-0.86820346	-37.6101036	-0.18712944	-1.84642434	-0.59689564	-25.143816
F61	COMB3	1.25	-0.86820346	-16.9251137	-0.18712944	-1.84642434	-0.36298382	8.940692902
F61	COMB3	2.5	-0.86820346	3.759871721	-0.18712944	-1.84642434	-0.12907201	17.16897011
F61	COMB3	3.75	-0.86820346	24.44485855	-0.18712944	-1.84642434	0.104839794	-0.45898658
F61	COMB3	5	-0.86820346	45.12984848	-0.18712944	-1.84642434	0.338751584	-43.9431763
F62	D	0	-1.97923636	-41.4198036	-0.10866752	-1.51678276	-0.28120118	-34.7032471
F62	D	1.25	-1.97923636	-21.7198162	-0.10866752	-1.51678276	-0.14536676	4.759015083
F62	D	2.5	-1.97923636	-2.01982927	-0.10866752	-1.51678276	-0.00953236	19.5962944
F62	D	3.75	-1.97923636	17.68015862	-0.10866752	-1.51678276	0.126302049	9.808588982
F62	D	5	-1.97923636	37.38014221	-0.10866752	-1.51678276	0.262136459	-24.6041012
F62	L	0	1.611585855	0.474968225	-0.0196448	-0.05633969	-0.0600377	0.940544784
F62	L	1.25	1.611585855	0.474968225	-0.0196448	-0.05633969	-0.0354817	0.346834421
F62	L	2.5	1.611585855	0.474968225	-0.0196448	-0.05633969	-0.01092569	-0.24687582
F62	L	3.75	1.611585855	0.474968225	-0.0196448	-0.05633969	0.013630311	-0.84058607
F62	L	5	1.611585855	0.474968225	-0.0196448	-0.05633969	0.038186315	-1.43429637
F62	EX	0	3.57002449	15.95313835	-0.04759081	0.023656555	-0.0414756	36.31830978
F62	EX	1.25	3.57002449	15.95313835	-0.04759081	0.023656555	0.018012907	16.37688637
F62	EX	2.5	3.57002449	15.95313835	-0.04759081	0.023656555	0.077501416	-3.56453657
F62	EX	3.75	3.57002449	15.95313835	-0.04759081	0.023656555	0.136989921	-23.5059605
F62	EX	5	3.57002449	15.95313835	-0.04759081	0.023656555	0.196478441	-43.4473839
F62	EY	0	0.045643955	-0.01811988	0.026919231	-0.23748852	0.134723082	-0.0917534
F62	EY	1.25	0.045643955	-0.01811988	0.026919231	-0.23748852	0.101074032	-0.06910355
F62	EY	2.5	0.045643955	-0.01811988	0.026919231	-0.23748852	0.06742499	-0.04645369
F62	EY	3.75	0.045643955	-0.01811988	0.026919231	-0.23748852	0.033775955	-0.02380384
F62	EY	5	0.045643955	-0.01811988	0.026919231	-0.23748852	0.000126915	-0.00115399
F62	COMB1	0	0.203453764	-48.9438171	-0.16183272	-1.91028285	-0.43350172	-40.1390266
F62	COMB1	1.25	0.203453764	-25.3038311	-0.16183272	-1.91028285	-0.23121083	6.265753269
F62	COMB1	2.5	0.203453764	-1.66384614	-0.16183272	-1.91028285	-0.02891994	23.12055206
F62	COMB1	3.75	0.203453764	21.97613907	-0.16183272	-1.91028285	0.173370957	10.42536831
F62	COMB1	5	0.203453764	45.6161232	-0.16183272	-1.91028285	0.37566185	-31.8197975
F62	COMB2	0	2.138804674	-26.8353882	-0.16106594	-1.66069329	-0.31466258	1.418408871
F62	COMB2	1.25	2.138804674	-6.15040207	-0.16106594	-1.66069329	-0.11333016	22.03452873
F62	COMB2	2.5	2.138804674	14.534585	-0.16106594	-1.66069329	0.088002272	16.79441452
F62	COMB2	3.75	2.138804674	35.21957016	-0.16106594	-1.66069329	0.289334685	-14.3019333
F62	COMB2	5	2.138804674	55.90455627	-0.16106594	-1.66069329	0.490667135	-71.2545166
F62	COMB3	0	-0.3980647	-38.3349648	-0.10701492	-1.85228014	-0.18577869	-24.7982121
F62	COMB3	1.25	-0.3980647	-17.6499805	-0.10701492	-1.85228014	-0.05201004	10.192379
F62	COMB3	2.5	-0.3980647	3.035007	-0.10701492	-1.85228014	0.081758618	19.32673836
F62	COMB3	3.75	-0.3980647	23.71999359	-0.10701492	-1.85228014	0.215527281	2.604861975
F62	COMB3	5	-0.3980647	44.40497971	-0.10701492	-1.85228014	0.349295944	-39.9732475
F63	D	0	-3.83119321	-44.7333565	-0.0656129	-0.84555501	-0.21810479	-35.6574211
F63	D	1.5	-3.83119321	-21.0933704	-0.0656129	-0.84555501	-0.11968544	13.7126255
F63	D	3	-3.83119321	2.546617746	-0.0656129	-0.84555501	-0.02126608	27.62269211
F63	D	4.5	-3.83119321	26.18660545	-0.0656129	-0.84555501	0.077153273	6.072771549
F63	D	6	-3.83119321	49.82658768	-0.0656129	-0.84555501	0.175572619	-50.9371338
F63	L	0	1.949141145	-0.34932026	-0.01582103	-0.04854997	-0.05291046	-1.36826396
F63	L	1.5	1.949141145	-0.34932026	-0.01582103	-0.04854997	-0.02917891	-0.84428352
F63	L	3	1.949141145	-0.34932026	-0.01582103	-0.04854997	-0.00544737	-0.32030308
F63	L	4.5	1.949141145	-0.34932026	-0.01582103	-0.04854997	0.018284176	0.203677371
F63	L	6	1.949141145	-0.34932026	-0.01582103	-0.04854997	0.04201572	0.727657795
F63	EX	0	-0.2747907	0.272085547	-0.00605137	0.251358539	0.017716035	0.904560745
F63	EX	1.5	-0.2747907	0.272085547	-0.00605137	0.251358539	0.026793096	0.496432424
F63	EX	3	-0.2747907	0.272085547	-0.00605137	0.251358539	0.035870157	0.08830408

F65	COMB2	3	6.114902973	2.98274827	-0.11517012	0.039199371	-0.12065722	8.797208786
F65	COMB2	4.5	6.114902973	12.05473137	-0.11517012	0.039199371	0.052097984	-2.48090291
F65	COMB2	6	6.114902973	21.12671471	-0.11517012	0.039199371	0.224853188	-27.366991
F65	COMB3	0	10.75833416	-8.97503185	-0.09088583	-0.10333132	-0.31513172	8.511081696
F65	COMB3	1.5	10.75833416	0.096951313	-0.09088583	-0.10333132	-0.17880295	15.16964054
F65	COMB3	3	10.75833416	9.168934822	-0.09088583	-0.10333132	-0.0424742	8.220226288
F65	COMB3	4.5	10.75833416	18.24091721	-0.09088583	-0.10333132	0.093854554	-12.3371658
F65	COMB3	6	10.75833416	27.31290054	-0.09088583	-0.10333132	0.230183318	-46.502533
F66	D	0	4.940412045	-17.0275593	-0.01135508	0.126812726	-0.03944581	-16.4238358
F66	D	1.5	4.940412045	-8.3875761	-0.01135508	0.126812726	-0.02241319	2.637518406
F66	D	3	4.940412045	0.252408236	-0.01135508	0.126812726	-0.00538057	8.738895416
F66	D	4.5	4.940412045	8.892392159	-0.01135508	0.126812726	0.011652046	1.880293727
F66	D	6	4.940412045	17.53237534	-0.01135508	0.126812726	0.028684665	-17.9382839
F66	L	0	2.494304895	-0.33523667	-0.00751342	0.047773972	-0.02591525	-1.34008586
F66	L	1.5	2.494304895	-0.33523667	-0.00751342	0.047773972	-0.01464512	-0.83723086
F66	L	3	2.494304895	-0.33523667	-0.00751342	0.047773972	-0.00337498	-0.33437577
F66	L	4.5	2.494304895	-0.33523667	-0.00751342	0.047773972	0.007895159	0.168479264
F66	L	6	2.494304895	-0.33523667	-0.00751342	0.047773972	0.019165296	0.671334326
F66	EX	0	1.355607867	-0.12740332	-0.10174678	0.185952485	-0.42393711	-0.35921881
F66	EX	1.5	1.355607867	-0.12740332	-0.10174678	0.185952485	-0.27131692	-0.16811378
F66	EX	3	1.355607867	-0.12740332	-0.10174678	0.185952485	-0.11869673	0.022991229
F66	EX	4.5	1.355607867	-0.12740332	-0.10174678	0.185952485	0.033923469	0.214096233
F66	EX	6	1.355607867	-0.12740332	-0.10174678	0.185952485	0.186543658	0.405201226
F66	EY	0	4.968499184	8.540791512	0.06823989	0.013948484	0.21506983	24.8157711
F66	EY	1.5	4.968499184	8.540791512	0.06823989	0.013948484	0.112709977	12.00458241
F66	EY	3	4.968499184	8.540791512	0.06823989	0.013948484	0.010350134	-0.80660653
F66	EY	4.5	4.968499184	8.540791512	0.06823989	0.013948484	-0.09200971	-13.617795
F66	EY	6	4.968499184	8.540791512	0.06823989	0.013948484	-0.19436957	-26.4289837
F66	COMB1	0	9.919383049	-20.96945	-0.02564757	0.228613615	-0.08879937	-21.8527393
F66	COMB1	1.5	9.919383049	-10.60147	-0.02564757	0.228613615	-0.05032801	1.825452805
F66	COMB1	3	9.919383049	-0.23348878	-0.02564757	0.228613615	-0.01185665	9.951673508
F66	COMB1	4.5	9.919383049	10.13449192	-0.02564757	0.228613615	0.026614709	2.525919199
F66	COMB1	6	9.919383049	20.50247192	-0.02564757	0.228613615	0.065086067	-20.451807
F66	COMB2	0	8.941269875	-15.4260502	-0.09810191	0.345056742	-0.42060933	-10.2219772
F66	COMB2	1.5	8.941269875	-6.35406733	-0.09810191	0.345056742	-0.27345642	6.11311245
F66	COMB2	3	8.941269875	2.717916012	-0.09810191	0.345056742	-0.12630354	8.840226173
F66	COMB2	4.5	8.941269875	11.78989887	-0.09810191	0.345056742	0.020849355	-2.04063654
F66	COMB2	6	8.941269875	20.86188316	-0.09810191	0.345056742	0.168002233	-26.5294743
F66	COMB3	0	11.61707973	-9.05683804	0.02531209	0.221423104	0.042701729	8.276251793
F66	COMB3	1.5	11.61707973	0.015145242	0.02531209	0.221423104	0.004733589	15.05752182
F66	COMB3	3	11.61707973	9.087128639	0.02531209	0.221423104	-0.03323455	8.230816841
F66	COMB3	4.5	11.61707973	18.15911102	0.02531209	0.221423104	-0.07120268	-12.2038651
F66	COMB3	6	11.61707973	27.23109436	0.02531209	0.221423104	-0.10917082	-46.2465248
F67	D	0	7.043553352	-17.5171471	0.028753912	-0.05575718	0.093221106	-17.7479801
F67	D	1.5	7.043553352	-8.87716389	0.028753912	-0.05575718	0.050090235	2.047755718
F67	D	3	7.043553352	-0.2371797	0.028753912	-0.05575718	0.006959362	8.883514404
F67	D	4.5	7.043553352	8.402804375	0.028753912	-0.05575718	-0.03617151	2.759294987
F67	D	6	7.043553352	17.04278755	0.028753912	-0.05575718	-0.07930239	-16.3249016
F67	L	0	5.108557224	-0.94227046	-0.00225144	-0.00370123	-0.00975849	-3.62873673
F67	L	1.5	5.108557224	-0.94227046	-0.00225144	-0.00370123	-0.00638133	-2.21533084
F67	L	3	5.108557224	-0.94227046	-0.00225144	-0.00370123	-0.00300417	-0.801925
F67	L	4.5	5.108557224	-0.94227046	-0.00225144	-0.00370123	0.000372994	0.611480892
F67	L	6	5.108557224	-0.94227046	-0.00225144	-0.00370123	0.003750157	2.024886847
F67	EX	0	0.105145834	-0.21279618	0.067714617	0.148057684	0.258102506	-0.67742872
F67	EX	1.5	0.105145834	-0.21279618	0.067714617	0.148057684	0.156530574	-0.35823447
F67	EX	3	0.105145834	-0.21279618	0.067714617	0.148057684	0.054958638	-0.03904016
F67	EX	4.5	0.105145834	-0.21279618	0.067714617	0.148057684	-0.04661329	0.280154169
F67	EX	6	0.105145834	-0.21279618	0.067714617	0.148057684	-0.14818522	0.599348426
F67	EY	0	-5.65075254	11.95075035	0.103878409	0.012896694	0.34645915	38.60951614
F67	EY	1.5	-5.65075254	11.95075035	0.103878409	0.012896694	0.190641522	20.68338966
F67	EY	3	-5.65075254	11.95075035	0.103878409	0.012896694	0.034823895	2.757262468
F67	EY	4.5	-5.65075254	11.95075035	0.103878409	0.012896694	-0.12099373	-15.1688643
F67	EY	6	-5.65075254	11.95075035	0.103878409	0.012896694	-0.27681136	-33.0949898
F67	COMB1	0	16.62595558	-22.5282097	0.030902388	-0.07283058	0.096251734	-27.1035538
F67	COMB1	1.5	16.62595558	-12.1602297	0.030902388	-0.07283058	0.049898151	-1.08722234
F67	COMB1	3	16.62595558	-1.79224837	0.030902388	-0.07283058	0.003544565	9.377137184
F67	COMB1	4.5	16.62595558	8.575732231	0.030902388	-0.07283058	-0.04280902	4.289523125
F67	COMB1	6	16.62595558	18.94371223	0.030902388	-0.07283058	-0.08916261	-16.3500633
F67	COMB2	0	7.333765507	-15.1455784	0.132288724	0.097591229	0.471078962	-8.31757164
F67	COMB2	1.5	7.333765507	-6.07359505	0.132288724	0.097591229	0.272645861	7.596809387
F67	COMB2	3	7.333765507	2.99838829	0.132288724	0.097591229	0.074212737	9.903214455
F67	COMB2	4.5	7.333765507	12.07037163	0.132288724	0.097591229	-0.12422038	-1.39835668
F67	COMB2	6	7.333765507	21.14235497	0.132288724	0.097591229	-0.3226535	-26.3079033
F67	COMB3	0	3.104757309	-6.2085638	0.159884825	0.000468773	0.539892614	20.548172
F67	COMB3	1.5	3.104757309	2.863419533	0.159884825	0.000468773	0.300065368	23.05702782
F67	COMB3	3	3.104757309	11.93540287	0.159884825	0.000468773	0.060238078	11.95791149
F67	COMB3	4.5	3.104757309	21.00738525	0.159884825	0.000468773	-0.1795892	-12.7491827
F67	COMB3	6	3.104757309	30.07936859	0.159884825	0.000468773	-0.41941646	-51.0642509
F68	D	0	-1.99015689	-45.0635681	0.059046779	0.861185253	0.194422483	-36.9381447
F68	D	1.5	-1.99015689	-21.4235802	0.059046779	0.861185253	0.105852306	12.92722511
F68	D	3	-1.99015689	2.216405153	0.059046779	0.861185253	0.017282125	27.33260918
F68	D	4.5	-1.99015689	25.85639191	0.059046779	0.861185253	-0.07128806	6.278008461
F68	D	6	-1.99015689	49.49637985	0.059046779	0.861185253	-0.15985824	-50.2365761
F68	L	0	3.966503382	-0.70999515	0.013598847	0.052991118	0.045118071	-2.77341175

F68	L	1.5	3.966503382	-0.70999515	0.013598847	0.052991118	0.024719793	-1.70841885
F68	L	3	3.966503382	-0.70999515	0.013598847	0.052991118	0.00432152	-0.643426
F68	L	4.5	3.966503382	-0.70999515	0.013598847	0.052991118	-0.01607675	0.421566933
F68	L	6	3.966503382	-0.70999515	0.013598847	0.052991118	-0.03647503	1.486559868
F68	EX	0	0.295735538	-0.27073106	-0.01967613	0.249983549	-0.04432177	-0.90011001
F68	EX	1.5	0.295735538	-0.27073106	-0.01967613	0.249983549	-0.01480757	-0.49401337
F68	EX	3	0.295735538	-0.27073106	-0.01967613	0.249983549	0.014706632	-0.08791671
F68	EX	4.5	0.295735538	-0.27073106	-0.01967613	0.249983549	0.044220835	0.318179965
F68	EX	6	0.295735538	-0.27073106	-0.01967613	0.249983549	0.073735036	0.724276602
F68	EY	0	-6.3162365	12.60430622	0.023319792	-0.00162933	0.074009582	40.87297058
F68	EY	1.5	-6.3162365	12.60430622	0.023319792	-0.00162933	0.039029893	21.96650887
F68	EY	3	-6.3162365	12.60430622	0.023319792	-0.00162933	0.004050205	3.060046434
F68	EY	4.5	-6.3162365	12.60430622	0.023319792	-0.00162933	-0.03092949	-15.8464146
F68	EY	6	-6.3162365	12.60430622	0.023319792	-0.00162933	-0.06590918	-34.7528763
F68	COMB1	0	3.958216906	-55.2122765	0.092614293	1.11820817	0.305495888	-48.7632294
F68	COMB1	1.5	3.958216906	-26.8442898	0.092614293	1.11820817	0.166574433	12.7791996
F68	COMB1	3	3.958216906	1.523694038	0.092614293	1.11820817	0.027652981	31.76964951
F68	COMB1	4.5	3.958216906	29.89167786	0.092614293	1.11820817	-0.11126848	8.208117485
F68	COMB1	6	3.958216906	58.25966263	0.092614293	1.11820817	-0.25018993	-57.9053955
F68	COMB2	0	-2.52374434	-43.8502464	0.053263694	1.179156423	0.195795789	-27.7153034
F68	COMB2	1.5	-2.52374434	-19.0282593	0.053263694	1.179156423	0.115900241	19.44358063
F68	COMB2	3	-2.52374434	5.793726921	0.053263694	1.179156423	0.036004689	29.36948204
F68	COMB2	4.5	-2.52374434	30.61571121	0.053263694	1.179156423	-0.04389086	2.062397957
F68	COMB2	6	-2.52374434	55.43769836	0.053263694	1.179156423	-0.12378641	-62.4776688
F68	COMB3	0	-7.37910795	-34.3911552	0.084570557	0.99797076	0.282104492	2.974407911
F68	COMB3	1.5	-7.37910795	-9.56916714	0.084570557	0.99797076	0.155248657	35.94465256
F68	COMB3	3	-7.37910795	15.25281811	0.084570557	0.99797076	0.028392814	31.68191528
F68	COMB3	4.5	-7.37910795	40.0748024	0.084570557	0.99797076	-0.09846304	-9.81380653
F68	COMB3	6	-7.37910795	64.89678955	0.084570557	0.99797076	-0.22531888	-88.542511
F69	D	0	4.767474174	-14.8324499	0.084582739	-0.16873048	0.214125961	-12.6064463
F69	D	1.25	4.767474174	-7.63246441	0.084582739	-0.16873048	0.108397529	1.434126019
F69	D	2.5	4.767474174	-0.43247801	0.084582739	-0.16873048	0.002669104	6.474715233
F69	D	3.75	4.767474174	6.76750803	0.084582739	-0.16873048	-0.10305932	2.515321016
F69	D	5	4.767474174	13.96749401	0.084582739	-0.16873048	-0.20878774	-10.4440556
F69	L	0	3.024105072	-0.91695124	0.015855553	-0.03105834	0.038510058	-2.73581719
F69	L	1.25	3.024105072	-0.91695124	0.015855553	-0.03105834	0.018690618	-1.5896281
F69	L	2.5	3.024105072	-0.91695124	0.015855553	-0.03105834	-0.00112882	-0.44343907
F69	L	3.75	3.024105072	-0.91695124	0.015855553	-0.03105834	-0.02094826	0.702749968
F69	L	5	3.024105072	-0.91695124	0.015855553	-0.03105834	-0.0407677	1.848939061
F69	EX	0	-6.14462423	17.60514069	-0.15415172	0.000194659	-0.41726634	48.03343201
F69	EX	1.25	-6.14462423	17.60514069	-0.15415172	0.000194659	-0.22457668	26.02700424
F69	EX	2.5	-6.14462423	17.60514069	-0.15415172	0.000194659	-0.031887	4.020579815
F69	EX	3.75	-6.14462423	17.60514069	-0.15415172	0.000194659	0.160802677	-17.9858456
F69	EX	5	-6.14462423	17.60514069	-0.15415172	0.000194659	0.353492349	-39.9922714
F69	EY	0	0.0255685	-0.00473097	0.022926264	0.091686495	0.087846577	-0.01484561
F69	EY	1.25	0.0255685	-0.00473097	0.022926264	0.091686495	0.059188746	-0.00893189
F69	EY	2.5	0.0255685	-0.00473097	0.022926264	0.091686495	0.03053092	-0.00301817
F69	EY	3.75	0.0255685	-0.00473097	0.022926264	0.091686495	0.00187309	0.00289555
F69	EY	5	0.0255685	-0.00473097	0.022926264	0.091686495	-0.02678474	0.008809269
F69	COMB1	0	10.55953789	-19.2660618	0.126868173	-0.25216991	0.318567246	-19.505043
F69	COMB1	1.25	10.55953789	-10.6260786	0.126868173	-0.25216991	0.159982026	-0.82245374
F69	COMB1	2.5	10.55953789	-1.98609555	0.126868173	-0.25216991	0.00139681	7.060155869
F69	COMB1	3.75	10.55953789	6.653887272	0.126868173	-0.25216991	-0.1571884	4.142785072
F69	COMB1	5	10.55953789	15.29387093	0.126868173	-0.25216991	-0.31577361	-9.57456493
F69	COMB2	0	-0.39319083	2.356916904	-0.05851889	-0.15786766	-0.16723607	35.6112739
F69	COMB2	1.25	-0.39319083	9.916902542	-0.05851889	-0.15786766	-0.09408746	27.94023514
F69	COMB2	2.5	-0.39319083	17.47688866	-0.05851889	-0.15786766	-0.02093883	10.81911755
F69	COMB2	3.75	-0.39319083	25.03687286	-0.05851889	-0.15786766	0.052209806	-15.7519836
F69	COMB2	5	-0.39319083	32.59685898	-0.05851889	-0.15786766	0.125358433	-51.7730675
F69	COMB3	0	4.049731255	-10.3222609	0.069321156	-0.09061824	0.197762936	1.01639235
F69	COMB3	1.25	4.049731255	-2.76227546	0.069321156	-0.09061824	0.111111477	9.194227219
F69	COMB3	2.5	4.049731255	4.797709942	0.069321156	-0.09061824	0.02446004	7.92208147
F69	COMB3	3.75	4.049731255	12.35769558	0.069321156	-0.09061824	-0.0621914	-2.8000474
F69	COMB3	5	4.049731255	19.91768074	0.069321156	-0.09061824	-0.14884284	-22.9721584
F70	D	0	2.28999877	-13.0600414	-0.02919918	0.00694979	-0.08310887	-8.23439503
F70	D	1.25	2.28999877	-5.86005592	-0.02919918	0.00694979	-0.0466099	3.590666771
F70	D	2.5	2.28999877	1.339930177	-0.02919918	0.00694979	-0.01011092	6.415745258
F70	D	3.75	2.28999877	8.539916039	-0.02919918	0.00694979	0.026388049	0.240841031
F70	D	5	2.28999877	15.7399025	-0.02919918	0.00694979	0.06288702	-14.9340458
F70	L	0	1.826725841	0.453902572	-0.01528978	0.015613819	-0.03992788	1.438844323
F70	L	1.25	1.826725841	0.453902572	-0.01528978	0.015613819	-0.02081566	0.8714661
F70	L	2.5	1.826725841	0.453902572	-0.01528978	0.015613819	-0.00170343	0.304087877
F70	L	3.75	1.826725841	0.453902572	-0.01528978	0.015613819	0.017408798	-0.26329035
F70	L	5	1.826725841	0.453902572	-0.01528978	0.015613819	0.036521025	-0.83066857
F70	EX	0	-2.6505425	13.81246376	-0.1343409	-0.01400501	-0.3361209	34.11684418
F70	EX	1.25	-2.6505425	13.81246376	-0.1343409	-0.01400501	-0.16819479	16.85126305
F70	EX	2.5	-2.6505425	13.81246376	-0.1343409	-0.01400501	-0.00026866	-0.41431594
F70	EX	3.75	-2.6505425	13.81246376	-0.1343409	-0.01400501	0.167657465	-17.6798973
F70	EX	5	-2.6505425	13.81246376	-0.1343409	-0.01400501	0.335583597	-34.9454765
F70	EY	0	0.009848183	-0.00129685	0.148305416	0.024909621	0.363563985	-0.00122135
F70	EY	1.25	0.009848183	-0.00129685	0.148305416	0.024909621	0.1781822	0.000399711
F70	EY	2.5	0.009848183	-0.00129685	0.148305416	0.024909621	-0.00719957	0.002020772
F70	EY	3.75	0.009848183	-0.00129685	0.148305416	0.024909621	-0.19258134	0.003641833
F70	EY	5	0.009848183	-0.00129685	0.148305416	0.024909621	-0.37796313	0.005262894

F70	COMB1	0	5.670759678	-14.9458065	-0.05950266	0.033321857	-0.16361526	-7.57912302
F70	COMB1	1.25	5.670759678	-6.30582285	-0.05950266	0.033321857	-0.08923693	5.703145981
F70	COMB1	2.5	5.670759678	2.334160328	-0.05950266	0.033321857	-0.0148586	8.185435295
F70	COMB1	3.75	5.670759678	10.97414398	-0.05950266	0.033321857	0.059519734	-0.13225529
F70	COMB1	5	5.670759678	19.61412621	-0.05950266	0.033321857	0.133898064	-19.2499237
F70	COMB2	0	0.239708081	0.725426435	-0.12780204	0.005566976	-0.33320409	27.11766815
F70	COMB2	1.25	0.239708081	8.285411835	-0.12780204	0.005566976	-0.17345153	21.48589516
F70	COMB2	2.5	0.239708081	15.845397	-0.12780204	0.005566976	-0.01369898	6.404139996
F70	COMB2	3.75	0.239708081	23.40538216	-0.12780204	0.005566976	0.146053582	-18.1275997
F70	COMB2	5	0.239708081	30.96536827	-0.12780204	0.005566976	0.30580613	-52.1093178
F70	COMB3	0	2.155337095	-9.22049999	0.07792788	0.033959154	0.176022485	2.552644014
F70	COMB3	1.25	2.155337095	-1.66051495	0.07792788	0.033959154	0.078612626	9.353280067
F70	COMB3	2.5	2.155337095	5.899470329	0.07792788	0.033959154	-0.01879723	6.703932762
F70	COMB3	3.75	2.155337095	13.45945549	0.07792788	0.033959154	-0.11620709	-5.39539671
F70	COMB3	5	2.155337095	21.0194416	0.07792788	0.033959154	-0.21361694	-26.9447079
F71	D	0	3.69060421	-14.3647442	2.22621E-06	0.000299282	0.018190229	-12.8070288
F71	D	1.25	3.69060421	-7.16475821	2.22621E-06	0.000299282	0.018187447	0.64891082
F71	D	2.5	3.69060421	0.035227824	2.22621E-06	0.000299282	0.018184664	5.104867458
F71	D	3.75	3.69060421	7.235213757	2.22621E-06	0.000299282	0.018181881	0.560841322
F71	D	5	3.69060421	14.43519974	2.22621E-06	0.000299282	0.018179098	-12.9831676
F71	L	0	2.584125996	0.063619711	-0.00093728	-0.0013386	0.004956092	-0.25468647
F71	L	1.25	2.584125996	0.063619711	-0.00093728	-0.0013386	0.00612769	-0.33421114
F71	L	2.5	2.584125996	0.063619711	-0.00093728	-0.0013386	0.007299288	-0.41373578
F71	L	3.75	2.584125996	0.063619711	-0.00093728	-0.0013386	0.008470885	-0.49326041
F71	L	5	2.584125996	0.063619711	-0.00093728	-0.0013386	0.009642483	-0.57278502
F71	EX	0	-1.15918088	14.63001919	-0.02757176	0.114075772	-0.06950166	36.5928154
F71	EX	1.25	-1.15918088	14.63001919	-0.02757176	0.114075772	-0.03503696	18.30529404
F71	EX	2.5	-1.15918088	14.63001919	-0.02757176	0.114075772	-0.00057225	0.017769327
F71	EX	3.75	-1.15918088	14.63001919	-0.02757176	0.114075772	0.033892445	-18.2697544
F71	EX	5	-1.15918088	14.63001919	-0.02757176	0.114075772	0.068357147	-36.5572777
F71	EY	0	0.032649446	-1.6617E-06	-0.00022399	-0.00011201	-0.07106056	-0.0057792
F71	EY	1.25	0.032649446	-1.6617E-06	-0.00022399	-0.00011201	-0.07078057	-0.00577713
F71	EY	2.5	0.032649446	-1.6617E-06	-0.00022399	-0.00011201	-0.07050058	-0.00577505
F71	EY	3.75	0.032649446	-1.6617E-06	-0.00022399	-0.00011201	-0.07022058	-0.00577297
F71	EY	5	0.032649446	-1.6617E-06	-0.00022399	-0.00011201	-0.0699406	-0.0057709
F71	COMB1	0	8.563326836	-17.1359024	-0.00149697	-0.00178262	0.029758021	-15.7759333
F71	COMB1	1.25	8.563326836	-8.49591827	-0.00149697	-0.00178262	0.031629238	0.243955165
F71	COMB1	2.5	8.563326836	0.144064918	-0.00149697	-0.00178262	0.033500455	5.46386385
F71	COMB1	3.75	8.563326836	8.78404808	-0.00149697	-0.00178262	0.035371676	-0.1162071
F71	COMB1	5	8.563326836	17.42403221	-0.00149697	-0.00178262	0.037242893	-16.4962578
F71	COMB2	0	3.499666214	0.079127818	-0.02890024	0.117925733	-0.07365739	24.34413719
F71	COMB2	1.25	3.499666214	7.639112949	-0.02890024	0.117925733	-0.03753209	19.52023888
F71	COMB2	2.5	3.499666214	15.19909859	-0.02890024	0.117925733	-0.00140679	5.246356487
F71	COMB2	3.75	3.499666214	22.7590847	-0.02890024	0.117925733	0.034718502	-18.4775085
F71	COMB2	5	3.499666214	30.31906891	-0.02890024	0.117925733	0.070843801	-51.6513519
F71	COMB3	0	4.358273983	-10.4544868	-0.0092132	0.035708852	-0.0758457	-2.00693727
F71	COMB3	1.25	4.358273983	-2.89450169	-0.0092132	0.035708852	-0.0643292	6.336181641
F71	COMB3	2.5	4.358273983	4.665483475	-0.0092132	0.035708852	-0.05281269	5.229317665
F71	COMB3	3.75	4.358273983	12.22546864	-0.0092132	0.035708852	-0.04129619	-5.327528
F71	COMB3	5	4.358273983	19.7854538	-0.0092132	0.035708852	-0.02977969	-25.3343544
F72	D	0	2.345890045	-15.6200438	0.027769106	-0.00976263	0.060986277	-14.7080841
F72	D	1.25	2.345890045	-8.4200573	0.027769106	-0.00976263	0.026274893	0.316978455
F72	D	2.5	2.345890045	-1.22007096	0.027769106	-0.00976263	-0.00843649	6.342058659
F72	D	3.75	2.345890045	5.979915142	0.027769106	-0.00976263	-0.04314787	3.36715579
F72	D	5	2.345890045	13.17990112	0.027769106	-0.00976263	-0.07785925	-8.60772991
F72	L	0	1.827157855	-0.57843065	0.021798009	-0.03372263	0.053420335	-1.16867888
F72	L	1.25	1.827157855	-0.57843065	0.021798009	-0.03372263	0.026172822	-0.44564047
F72	L	2.5	1.827157855	-0.57843065	0.021798009	-0.03372263	-0.00107469	0.277397901
F72	L	3.75	1.827157855	-0.57843065	0.021798009	-0.03372263	-0.0283222	1.000436306
F72	L	5	1.827157855	-0.57843065	0.021798009	-0.03372263	-0.05556972	1.723474622
F72	EX	0	0.242533654	13.72450256	-0.1324641	-0.01476422	-0.33186138	34.76684189
F72	EX	1.25	0.242533654	13.72450256	-0.1324641	-0.01476422	-0.16628124	17.61121368
F72	EX	2.5	0.242533654	13.72450256	-0.1324641	-0.01476422	-0.0007011	0.455585033
F72	EX	3.75	0.242533654	13.72450256	-0.1324641	-0.01476422	0.164879039	-16.7000446
F72	EX	5	0.242533654	13.72450256	-0.1324641	-0.01476422	0.330459148	-33.8556709
F72	EY	0	0.009873032	0.001295147	-0.14805378	-0.02480797	-0.3772651	0.005258713
F72	EY	1.25	0.009873032	0.001295147	-0.14805378	-0.02480797	-0.19219787	0.00363978
F72	EY	2.5	0.009873032	0.001295147	-0.14805378	-0.02480797	-0.00713063	0.002020846
F72	EY	3.75	0.009873032	0.001295147	-0.14805378	-0.02480797	0.177936614	0.000401913
F72	EY	5	0.009873032	0.001295147	-0.14805378	-0.02480797	0.36300382	-0.00121702
F72	COMB1	0	5.738520622	-19.6695404	0.068199739	-0.06567137	0.158656076	-19.5195885
F72	COMB1	1.25	5.738520622	-11.0295572	0.068199739	-0.06567137	0.073406391	-0.3326506
F72	COMB1	2.5	5.738520622	-2.38957429	0.068199739	-0.06567137	-0.01184329	8.054306984
F72	COMB1	3.75	5.738520622	6.250409126	0.068199739	-0.06567137	-0.09709298	5.641284943
F72	COMB1	5	5.738520622	14.89039135	0.068199739	-0.06567137	-0.18234266	-7.57171631
F72	COMB2	0	3.292871475	-2.37798357	-0.14771335	-0.04396887	-0.38145202	20.17371559
F72	COMB2	1.25	3.292871475	5.182002544	-0.14771335	-0.04396887	-0.19681033	18.42120361
F72	COMB2	2.5	3.292871475	12.74198723	-0.14771335	-0.04396887	-0.01216863	7.218708992
F72	COMB2	3.75	3.292871475	20.30197334	-0.14771335	-0.04396887	0.172473073	-13.4337673
F72	COMB2	5	3.292871475	27.86195755	-0.14771335	-0.04396887	0.357114762	-43.5362244
F72	COMB3	0	3.125504017	-12.2586727	-0.16115873	-0.0515725	-0.41980168	-4.85454512
F72	COMB3	1.25	3.125504017	-4.69868708	-0.16115873	-0.0515725	-0.21835329	5.743804455
F72	COMB3	2.5	3.125504017	2.861297846	-0.16115873	-0.0515725	-0.01690486	6.892172813
F72	COMB3	3.75	3.125504017	10.42128372	-0.16115873	-0.0515725	0.184543565	-1.40944076

F72	COMB3	5	3.125504017	17.98126793	-0.16115873	-0.0515725	0.385991991	-19.1610355
F73	D	0	4.810869217	-14.1833429	-0.07487148	0.144190729	-0.18432374	-11.0206356
F73	D	1.25	4.810869217	-6.98335743	-0.07487148	0.144190729	-0.09073439	2.208553314
F73	D	2.5	4.810869217	0.216628775	-0.07487148	0.144190729	0.002854957	6.437758923
F73	D	3.75	4.810869217	7.416615009	-0.07487148	0.144190729	0.096444309	1.666981339
F73	D	5	4.810869217	14.61660099	-0.07487148	0.144190729	0.190033659	-12.1037788
F73	L	0	3.011888027	0.915498018	-0.01290542	0.019988455	-0.03439841	1.872346282
F73	L	1.25	3.011888027	0.915498018	-0.01290542	0.019988455	-0.01826664	0.7279737
F73	L	2.5	3.011888027	0.915498018	-0.01290542	0.019988455	-0.00213487	-0.41639891
F73	L	3.75	3.011888027	0.915498018	-0.01290542	0.019988455	0.013996907	-1.56077147
F73	L	5	3.011888027	0.915498018	-0.01290542	0.019988455	0.030128678	-2.70514417
F73	EX	0	3.654923677	17.30285835	-0.14737993	0.000119141	-0.33925086	39.38782883
F73	EX	1.25	3.654923677	17.30285835	-0.14737993	0.000119141	-0.15502593	17.75925446
F73	EX	2.5	3.654923677	17.30285835	-0.14737993	0.000119141	0.029199006	-3.86931825
F73	EX	3.75	3.654923677	17.30285835	-0.14737993	0.000119141	0.213423938	-25.4978924
F73	EX	5	3.654923677	17.30285835	-0.14737993	0.000119141	0.397648871	-47.1264648
F73	EY	0	0.025553275	0.004728124	-0.02295274	-0.09167733	-0.02688529	0.008802749
F73	EY	1.25	0.025553275	0.004728124	-0.02295274	-0.09167733	0.001805635	0.002892592
F73	EY	2.5	0.025553275	0.004728124	-0.02295274	-0.09167733	0.030496564	-0.00301756
F73	EY	3.75	0.025553275	0.004728124	-0.02295274	-0.09167733	0.059187487	-0.00892772
F73	EY	5	0.025553275	0.004728124	-0.02295274	-0.09167733	0.087878421	-0.01483788
F73	COMB1	0	10.5920639	-15.5552149	-0.11049444	0.205010399	-0.27622595	-10.2290087
F73	COMB1	1.25	10.5920639	-6.9152317	-0.11049444	0.205010399	-0.1381079	3.815021992
F73	COMB1	2.5	10.5920639	1.724751353	-0.11049444	0.205010399	1.01623E-05	7.059072495
F73	COMB1	3.75	10.5920639	10.36473465	-0.11049444	0.205010399	0.138128221	-0.49685684
F73	COMB1	5	10.5920639	19.00471878	-0.11049444	0.205010399	0.276246279	-18.852766
F73	COMB2	0	9.791052818	3.305818319	-0.24244861	0.128941581	-0.56396896	29.7872982
F73	COMB2	1.25	9.791052818	10.86580372	-0.24244861	0.128941581	-0.26090816	20.93003273
F73	COMB2	2.5	9.791052818	18.42578888	-0.24244861	0.128941581	0.04215261	2.622786283
F73	COMB2	3.75	9.791052818	25.98577499	-0.24244861	0.128941581	0.345213383	-25.1344433
F73	COMB2	5	9.791052818	33.54576111	-0.24244861	0.128941581	0.648274183	-62.3416519
F73	COMB3	0	7.178288937	-9.14876366	-0.15320532	0.061472964	-0.33946902	1.434531093
F73	COMB3	1.25	7.178288937	-1.5887785	-0.15320532	0.061472964	-0.14796236	8.145495415
F73	COMB3	2.5	7.178288937	5.971206665	-0.15320532	0.061472964	0.0435443	5.406477451
F73	COMB3	3.75	7.178288937	13.53119183	-0.15320532	0.061472964	0.235050946	-6.78252268
F73	COMB3	5	7.178288937	21.09117699	-0.15320532	0.061472964	0.4265576	-28.421505
F74	D	0	-2.54784751	-47.405529	-0.00738529	-0.03576199	-0.01434775	-47.8989143
F74	D	1.5	-2.54784751	-23.7655525	-0.00738529	-0.03576199	-0.00326982	5.4793787
F74	D	3	-2.54784751	-0.12557462	-0.00738529	-0.03576199	0.007808104	23.39771843
F74	D	4.5	-2.54784751	23.51440048	-0.00738529	-0.03576199	0.018886032	5.856102467
F74	D	6	-2.54784751	47.1543808	-0.00738529	-0.03576199	0.029963959	-47.1454659
F74	L	0	1.114902139	0.067519113	-0.00132406	-0.00315793	-0.00240572	0.297736406
F74	L	1.5	1.114902139	0.067519113	-0.00132406	-0.00315793	-0.00041963	0.196457773
F74	L	3	1.114902139	0.067519113	-0.00132406	-0.00315793	0.001566456	0.095179133
F74	L	4.5	1.114902139	0.067519113	-0.00132406	-0.00315793	0.003552543	-0.0060995
F74	L	6	1.114902139	0.067519113	-0.00132406	-0.00315793	0.005538631	-0.10737814
F74	EX	0	-0.28483179	0.193003789	0.084806494	0.494146615	0.197151557	0.566859603
F74	EX	1.5	-0.28483179	0.193003789	0.084806494	0.494146615	0.069941849	0.277353972
F74	EX	3	-0.28483179	0.193003789	0.084806494	0.494146615	-0.05726786	-0.01215162
F74	EX	4.5	-0.28483179	0.193003789	0.084806494	0.494146615	-0.18447758	-0.30165723
F74	EX	6	-0.28483179	0.193003789	0.084806494	0.494146615	-0.31168729	-0.59116286
F74	EY	0	-3.69478011	10.11855888	-0.01992425	0.000673907	-0.05935	30.08878899
F74	EY	1.5	-3.69478011	10.11855888	-0.01992425	0.000673907	-0.02946363	14.91095543
F74	EY	3	-3.69478011	10.11855888	-0.01992425	0.000673907	0.000422734	-0.26687899
F74	EY	4.5	-3.69478011	10.11855888	-0.01992425	0.000673907	0.030309098	-15.4447136
F74	EY	6	-3.69478011	10.11855888	-0.01992425	0.000673907	0.060195461	-30.6225471
F74	COMB1	0	-1.27357376	-56.7786026	-0.01098084	-0.04796708	-0.02106645	-57.0023193
F74	COMB1	1.5	-1.27357376	-28.4106312	-0.01098084	-0.04796708	-0.0045952	6.889586926
F74	COMB1	3	-1.27357376	-0.04265896	-0.01098084	-0.04796708	0.011876054	28.2295475
F74	COMB1	4.5	-1.27357376	28.32531166	-0.01098084	-0.04796708	0.028347306	7.01756382
F74	COMB1	6	-1.27357376	56.6932869	-0.01098084	-0.04796708	0.044818562	-56.7463646
F74	COMB2	0	-3.78270245	-46.3674316	0.073326953	0.473109186	0.16953367	-40.1354027
F74	COMB2	1.5	-3.78270245	-21.5454559	0.073326953	0.473109186	0.059543271	10.79924488
F74	COMB2	3	-3.78270245	3.276520252	0.073326953	0.473109186	-0.05044713	24.50094223
F74	COMB2	4.5	-3.78270245	28.09849548	0.073326953	0.473109186	-0.16043754	0.969686508
F74	COMB2	6	-3.78270245	52.92047119	0.073326953	0.473109186	-0.27042794	-59.7945175
F74	COMB3	0	-6.2932868	-39.069252	-0.00237804	0.117818944	-0.0160377	-18.4282837
F74	COMB3	1.5	-6.2932868	-14.2472773	-0.00237804	0.117818944	-0.01247063	21.55910301
F74	COMB3	3	-6.2932868	10.57469845	-0.00237804	0.117818944	-0.00890356	24.31353378
F74	COMB3	4.5	-6.2932868	35.3966713	-0.00237804	0.117818944	-0.0053365	-10.1649847
F74	COMB3	6	-6.2932868	60.21865082	-0.00237804	0.117818944	-0.00176943	-81.8764496
F75	D	0	3.892070055	-17.1370564	-0.00206609	0.007243814	-0.00698262	-16.6632347
F75	D	1.5	3.892070055	-8.49707603	-0.00206609	0.007243814	-0.00388348	2.562359333
F75	D	3	3.892070055	0.142903745	-0.00206609	0.007243814	-0.00078435	8.827986717
F75	D	4.5	3.892070055	8.782884598	-0.00206609	0.007243814	0.002314793	2.133648157
F75	D	6	3.892070055	17.42286301	-0.00206609	0.007243814	0.005413932	-17.5206566
F75	L	0	2.188416719	0.117332377	0.001842175	0.001303856	0.00596826	0.530431569
F75	L	1.5	2.188416719	0.117332377	0.001842175	0.001303856	0.003204998	0.35443303
F75	L	3	2.188416719	0.117332377	0.001842175	0.001303856	0.000441737	0.178434536
F75	L	4.5	2.188416719	0.117332377	0.001842175	0.001303856	-0.00232152	0.002436022
F75	L	6	2.188416719	0.117332377	0.001842175	0.001303856	-0.00508478	-0.1735625
F75	EX	0	-0.05222157	0.174517781	0.111129291	0.26304853	0.29555586	0.519410551
F75	EX	1.5	-0.05222157	0.174517781	0.111129291	0.26304853	0.128861964	0.257633924
F75	EX	3	-0.05222157	0.174517781	0.111129291	0.26304853	-0.03783192	-0.00414268

F75	EX	4.5	-0.05222157	0.174517781	0.111129291	0.26304853	-0.20452581	-0.2659193
F75	EX	6	-0.05222157	0.174517781	0.111129291	0.26304853	-0.37121969	-0.52769589
F75	EY	0	-3.35231256	9.702450752	-0.06831752	0.000246367	-0.2063968	28.88803482
F75	EY	1.5	-3.35231256	9.702450752	-0.06831752	0.000246367	-0.10392055	14.33436489
F75	EY	3	-3.35231256	9.702450752	-0.06831752	0.000246367	-0.00144431	-0.21930543
F75	EY	4.5	-3.35231256	9.702450752	-0.06831752	0.000246367	0.101031937	-14.7729759
F75	EY	6	-3.35231256	9.702450752	-0.06831752	0.000246367	0.203508168	-29.3266449
F75	COMB1	0	8.171951294	-20.3767376	0.000468168	0.010778747	0.001170068	-19.1471901
F75	COMB1	1.5	8.171951294	-10.0087595	0.000468168	0.010778747	0.000467817	3.641924143
F75	COMB1	3	8.171951294	0.359216273	0.000468168	0.010778747	-0.00023443	10.87907982
F75	COMB1	4.5	8.171951294	10.72719288	0.000468168	0.010778747	-0.00093669	2.564275503
F75	COMB1	6	8.171951294	21.09516907	0.000468168	0.010778747	-0.00163894	-21.3024883
F75	COMB2	0	3.665997028	-14.7200527	0.091909684	0.280349553	0.235433564	-7.69198942
F75	COMB2	1.5	3.665997028	-5.64807272	0.091909684	0.280349553	0.097569078	7.58409977
F75	COMB2	3	3.665997028	3.423906326	0.091909684	0.280349553	-0.04029541	9.252223969
F75	COMB2	4.5	3.665997028	12.49588585	0.091909684	0.280349553	-0.17815991	-2.68761611
F75	COMB2	6	3.665997028	21.56786537	0.091909684	0.280349553	-0.31602439	-28.2354202
F75	COMB3	0	1.239646792	-7.71440458	-0.03831678	0.091135696	-0.1290683	13.16674137
F75	COMB3	1.5	1.239646792	1.357575417	-0.03831678	0.091135696	-0.07159314	17.93436241
F75	COMB3	3	1.239646792	10.42955494	-0.03831678	0.091135696	-0.014118	9.094017982
F75	COMB3	4.5	1.239646792	19.50153351	-0.03831678	0.091135696	0.043357152	-13.3542919
F75	COMB3	6	1.239646792	28.57351303	-0.03831678	0.091135696	0.100832298	-49.4105606
F76	D	0	2.666446686	-17.0440788	0.009170999	-0.00352852	0.033021521	-16.5074272
F76	D	1.5	2.666446686	-8.40409851	0.009170999	-0.00352852	0.019265026	2.578701258
F76	D	3	2.666446686	0.23588115	0.009170999	-0.00352852	0.005508531	8.704862595
F76	D	4.5	2.666446686	8.875861168	0.009170999	-0.00352852	-0.00824796	1.871057987
F76	D	6	2.666446686	17.51584053	0.009170999	-0.00352852	-0.02200446	-17.9227123
F76	L	0	1.388200045	0.128258556	0.004196846	-0.0002681	0.013596447	0.489387155
F76	L	1.5	1.388200045	0.128258556	0.004196846	-0.0002681	0.00730118	0.296999365
F76	L	3	1.388200045	0.128258556	0.004196846	-0.0002681	0.001005913	0.104611591
F76	L	4.5	1.388200045	0.128258556	0.004196846	-0.0002681	-0.00528935	-0.08777619
F76	L	6	1.388200045	0.128258556	0.004196846	-0.0002681	-0.01158462	-0.28016397
F76	EX	0	-0.92846721	0.191505119	0.093644731	0.270518184	0.255244136	0.614985466
F76	EX	1.5	-0.92846721	0.191505119	0.093644731	0.270518184	0.114777073	0.327727884
F76	EX	3	-0.92846721	0.191505119	0.093644731	0.270518184	-0.02568997	0.040470321
F76	EX	4.5	-0.92846721	0.191505119	0.093644731	0.270518184	-0.16615702	-0.24678725
F76	EX	6	-0.92846721	0.191505119	0.093644731	0.270518184	-0.30662405	-0.5340448
F76	EY	0	2.178995848	9.198703766	-0.05372532	0.000564993	-0.16540377	27.7903614
F76	EY	1.5	2.178995848	9.198703766	-0.05372532	0.000564993	-0.08481582	13.99231052
F76	EY	3	2.178995848	9.198703766	-0.05372532	0.000564993	-0.00422787	0.194258586
F76	EY	4.5	2.178995848	9.198703766	-0.05372532	0.000564993	0.076360084	-13.6037931
F76	EY	6	2.178995848	9.198703766	-0.05372532	0.000564993	0.156948045	-27.401844
F76	COMB1	0	5.420855999	-20.2476826	0.017720152	-0.00466318	0.06138014	-19.0258923
F76	COMB1	1.5	5.420855999	-9.87970543	0.017720152	-0.00466318	0.034799919	3.569640398
F76	COMB1	3	5.420855999	0.488271087	0.017720152	-0.00466318	0.008219698	10.61321354
F76	COMB1	4.5	5.420855999	10.8562479	0.017720152	-0.00466318	-0.01836052	2.104827642
F76	COMB1	6	5.420855999	21.22422409	0.017720152	-0.00466318	-0.04494074	-21.9555187
F76	COMB2	0	2.9624722	-14.7600832	0.09095037	0.276374876	0.251030952	-7.78816748
F76	COMB2	1.5	2.9624722	-5.68810272	0.09095037	0.276374876	0.114605434	7.547966957
F76	COMB2	3	2.9624722	3.383876085	0.09095037	0.276374876	-0.02182008	9.276136398
F76	COMB2	4.5	2.9624722	12.45585537	0.09095037	0.276374876	-0.15824561	-2.6036582
F76	COMB2	6	2.9624722	21.52783394	0.09095037	0.276374876	-0.29467112	-28.0914173
F76	COMB3	0	5.232530594	-8.13691902	-0.01596194	0.082017072	-0.05431658	12.19495869
F76	COMB3	1.5	5.232530594	0.93506074	-0.01596194	0.082017072	-0.03037369	17.59635162
F76	COMB3	3	5.232530594	10.00704002	-0.01596194	0.082017072	-0.00643078	9.389778137
F76	COMB3	4.5	5.232530594	19.07901955	-0.01596194	0.082017072	0.01751212	-12.4247589
F76	COMB3	6	5.232530594	28.15099716	-0.01596194	0.082017072	0.041455027	-47.8472595
F77	D	0	2.670078516	-17.0448837	-0.00897527	0.004596481	-0.03233561	-16.5101566
F77	D	1.5	2.670078516	-8.40490437	-0.00897527	0.004596481	-0.01887271	2.577179432
F77	D	3	2.670078516	0.235076606	-0.00897527	0.004596481	-0.00540981	8.704547882
F77	D	4.5	2.670078516	8.87505722	-0.00897527	0.004596481	0.008053089	1.871949673
F77	D	6	2.670078516	17.51503754	-0.00897527	0.004596481	0.02151599	-17.9206142
F77	L	0	1.422141314	0.130178332	-0.00536738	0.001048528	-0.01742822	0.499448985
F77	L	1.5	1.422141314	0.130178332	-0.00536738	0.001048528	-0.00937716	0.304181546
F77	L	3	1.422141314	0.130178332	-0.00536738	0.001048528	-0.0013261	0.108914107
F77	L	4.5	1.422141314	0.130178332	-0.00536738	0.001048528	0.006724967	-0.08635332
F77	L	6	1.422141314	0.130178332	-0.00536738	0.001048528	0.014776031	-0.28162074
F77	EX	0	0.928420842	-0.1937919	0.09032134	0.259548515	0.245515928	-0.62186205
F77	EX	1.5	0.928420842	-0.1937919	0.09032134	0.259548515	0.110033952	-0.33117428
F77	EX	3	0.928420842	-0.1937919	0.09032134	0.259548515	-0.02544802	-0.04048653
F77	EX	4.5	0.928420842	-0.1937919	0.09032134	0.259548515	-0.16092999	0.250201225
F77	EX	6	0.928420842	-0.1937919	0.09032134	0.259548515	-0.29641196	0.540888965
F77	EY	0	2.166789055	9.199081421	0.053773176	-0.00056465	0.165556788	27.79157066
F77	EY	1.5	2.166789055	9.199081421	0.053773176	-0.00056465	0.084897049	13.99295235
F77	EY	3	2.166789055	9.199081421	0.053773176	-0.00056465	0.004237308	0.194334432
F77	EY	4.5	2.166789055	9.199081421	0.053773176	-0.00056465	-0.07642243	-13.6042833
F77	EY	6	2.166789055	9.199081421	0.053773176	-0.00056465	-0.15708217	-27.4029007
F77	COMB1	0	5.479520321	-20.245575	-0.01935813	0.007193422	-0.06668789	-19.0130692
F77	COMB1	1.5	5.479520321	-9.87759972	-0.01935813	0.007193422	-0.03765071	3.579305649
F77	COMB1	3	5.479520321	0.490377247	-0.01935813	0.007193422	-0.00861353	10.61971951
F77	COMB1	4.5	5.479520321	10.85835361	-0.01935813	0.007193422	0.020423653	2.108174324
F77	COMB1	6	5.479520321	21.2263298	-0.01935813	0.007193422	0.049460836	-21.9553318
F77	COMB2	0	4.895010948	-15.1589851	0.099306382	0.273611456	0.266817093	-9.06762028
F77	COMB2	1.5	4.895010948	-6.08700705	0.099306382	0.273611456	0.117857561	6.866869926

F77	COMB2	3	4.895010948	2.984972715	0.099306382	0.273611456	-0.03110197	9.193394661
F77	COMB2	4.5	4.895010948	12.05695248	0.099306382	0.273611456	-0.1800615	-2.08804512
F77	COMB2	6	4.895010948	21.12893105	0.099306382	0.273611456	-0.32902104	-26.9774494
F77	COMB3	0	5.81913805	-8.25813103	0.073798299	0.086321495	0.211729869	11.80692482
F77	COMB3	1.5	5.81913805	0.813848138	0.073798299	0.086321495	0.101032443	17.39013481
F77	COMB3	3	5.81913805	9.885828018	0.073798299	0.086321495	-0.00966497	9.365381241
F77	COMB3	4.5	5.81913805	18.95780754	0.073798299	0.086321495	-0.12036239	-12.2673378
F77	COMB3	6	5.81913805	28.02978706	0.073798299	0.086321495	-0.2310598	-47.5080223
F78	D	0	3.959309578	-17.1340752	0.000238746	-0.00648252	0.000865785	-16.646143
F78	D	1.5	3.959309578	-8.49409485	0.000238746	-0.00648252	0.000507666	2.574980259
F78	D	3	3.959309578	0.145884976	0.000238746	-0.00648252	0.000149547	8.836136818
F78	D	4.5	3.959309578	8.785865784	0.000238746	-0.00648252	-0.00020857	2.137325525
F78	D	6	3.959309578	17.4258461	0.000238746	-0.00648252	-0.00056669	-17.521452
F78	L	0	2.925854206	0.146929845	-0.00382196	-0.00059882	-0.0124537	0.67512238
F78	L	1.5	2.925854206	0.146929845	-0.00382196	-0.00059882	-0.00672075	0.454727679
F78	L	3	2.925854206	0.146929845	-0.00382196	-0.00059882	-0.00098781	0.234332964
F78	L	4.5	2.925854206	0.146929845	-0.00382196	-0.00059882	0.004745129	0.013938281
F78	L	6	2.925854206	0.146929845	-0.00382196	-0.00059882	0.010478071	-0.20645642
F78	EX	0	0.038328744	-0.17403768	0.100850292	0.230397701	0.26584506	-0.51781398
F78	EX	1.5	0.038328744	-0.17403768	0.100850292	0.230397701	0.114569679	-0.2567575
F78	EX	3	0.038328744	-0.17403768	0.100850292	0.230397701	-0.03670571	0.004298916
F78	EX	4.5	0.038328744	-0.17403768	0.100850292	0.230397701	-0.1879811	0.265355349
F78	EX	6	0.038328744	-0.17403768	0.100850292	0.230397701	-0.3392565	0.526411772
F78	EY	0	-3.35256052	9.702490807	0.068269446	-0.00024605	0.206244349	28.88815689
F78	EY	1.5	-3.35256052	9.702490807	0.068269446	-0.00024605	0.103840202	14.33442688
F78	EY	3	-3.35256052	9.702490807	0.068269446	-0.00024605	0.001436065	-0.21930423
F78	EY	4.5	-3.35256052	9.702490807	0.068269446	-0.00024605	-0.10096808	-14.773035
F78	EY	6	-3.35256052	9.702490807	0.068269446	-0.00024605	-0.20337223	-29.3267651
F78	COMB1	0	9.432538033	-20.3258038	-0.00582864	-0.00873714	-0.01888697	-18.8951759
F78	COMB1	1.5	9.432538033	-9.95782661	-0.00582864	-0.00873714	-0.01014401	3.817540407
F78	COMB1	3	9.432538033	0.410149723	-0.00582864	-0.00873714	-0.00140104	10.97829628
F78	COMB1	4.5	9.432538033	10.77812576	-0.00582864	-0.00873714	0.00734192	2.587091923
F78	COMB1	6	9.432538033	21.14610291	-0.00582864	-0.00873714	0.016084883	-21.3560715
F78	COMB2	0	4.062532902	-15.0683413	0.124931693	0.231388822	0.337102771	-8.70195389
F78	COMB2	1.5	4.062532902	-5.99636173	0.124931693	0.231388822	0.149705291	7.096569061
F78	COMB2	3	4.062532902	3.075617552	0.124931693	0.231388822	-0.03769219	9.287126541
F78	COMB2	4.5	4.062532902	12.14759731	0.124931693	0.231388822	-0.22508967	-2.13028073
F78	COMB2	6	4.062532902	21.21957779	0.124931693	0.231388822	-0.41248715	-27.155653
F78	COMB3	0	1.570804119	-7.81170368	0.102497533	0.065321647	0.297283918	12.90366745
F78	COMB3	1.5	1.570804119	1.260276198	0.102497533	0.065321647	0.14353767	17.81723785
F78	COMB3	3	1.570804119	10.33225536	0.102497533	0.065321647	-0.01020857	9.122842789
F78	COMB3	4.5	1.570804119	19.40423393	0.102497533	0.065321647	-0.16395481	-13.1795177
F78	COMB3	6	1.570804119	28.47621536	0.102497533	0.065321647	-0.31770107	-49.0898399
F79	D	0	-1.48748147	-47.3648643	0.005097987	0.037342258	0.007018132	-47.6988754
F79	D	1.5	-1.48748147	-23.7248898	0.005097987	0.037342258	-0.00062885	5.618426323
F79	D	3	-1.48748147	-0.08491367	0.005097987	0.037342258	-0.00827582	23.47577477
F79	D	4.5	-1.48748147	23.55506325	0.005097987	0.037342258	-0.0159228	5.873167515
F79	D	6	-1.48748147	47.19504166	0.005097987	0.037342258	-0.02356978	-47.1893921
F79	L	0	2.275933981	0.113792151	0.000466677	0.004605362	-0.00016947	0.524163663
F79	L	1.5	2.275933981	0.113792151	0.000466677	0.004605362	-0.00086948	0.353475451
F79	L	3	2.275933981	0.113792151	0.000466677	0.004605362	-0.0015695	0.182787299
F79	L	4.5	2.275933981	0.113792151	0.000466677	0.004605362	-0.00226951	0.012099126
F79	L	6	2.275933981	0.113792151	0.000466677	0.004605362	-0.00296953	-0.15858905
F79	EX	0	0.298809409	-0.1901315	0.070696615	0.387957126	0.158521339	-0.55861354
F79	EX	1.5	0.298809409	-0.1901315	0.070696615	0.387957126	0.052476443	-0.2734164
F79	EX	3	0.298809409	-0.1901315	0.070696615	0.387957126	-0.05356845	0.011780767
F79	EX	4.5	0.298809409	-0.1901315	0.070696615	0.387957126	-0.15961336	0.296977937
F79	EX	6	0.298809409	-0.1901315	0.070696615	0.387957126	-0.26565823	0.582175076
F79	EY	0	-3.69474864	10.11856461	0.019925475	-0.00067333	0.059352763	30.08880615
F79	EY	1.5	-3.69474864	10.11856461	0.019925475	-0.00067333	0.029464561	14.91096306
F79	EY	3	-3.69474864	10.11856461	0.019925475	-0.00067333	-0.00042364	-0.26687947
F79	EY	4.5	-3.69474864	10.11856461	0.019925475	-0.00067333	-0.03031185	-15.4447222
F79	EY	6	-3.69474864	10.11856461	0.019925475	-0.00067333	-0.06020005	-30.6225643
F79	COMB1	0	1.8565166	-56.6557732	0.006864268	0.052179288	0.00815061	-56.3999901
F79	COMB1	1.5	1.8565166	-28.2878017	0.006864268	0.052179288	-0.00214579	7.307672501
F79	COMB1	3	1.8565166	0.080171034	0.006864268	0.052179288	-0.01244219	28.46338844
F79	COMB1	4.5	1.8565166	28.44814301	0.006864268	0.052179288	-0.02273859	7.067159653
F79	COMB1	6	1.8565166	56.81611633	0.006864268	0.052179288	-0.03303498	-56.8810158
F79	COMB2	0	-1.69951439	-46.7067032	0.084947415	0.441983581	0.190081358	-41.018898
F79	COMB2	1.5	-1.69951439	-21.8847294	0.084947415	0.441983581	0.062660284	10.42465973
F79	COMB2	3	-1.69951439	2.937246799	0.084947415	0.441983581	-0.0647608	24.63526726
F79	COMB2	4.5	-1.69951439	27.75922203	0.084947415	0.441983581	-0.19218189	1.612921715
F79	COMB2	6	-1.69951439	52.58119965	0.084947415	0.441983581	-0.31960297	-58.6423759
F79	COMB3	0	-4.63029766	-39.1326637	0.048691072	0.162159547	0.119570278	-18.5014248
F79	COMB3	1.5	-4.63029766	-14.3106899	0.048691072	0.162159547	0.046533693	21.58107758
F79	COMB3	3	-4.63029766	10.51128674	0.048691072	0.162159547	-0.02650289	24.43062782
F79	COMB3	4.5	-4.63029766	35.33325958	0.048691072	0.162159547	-0.09953948	-9.95277309
F79	COMB3	6	-4.63029766	60.15523911	0.048691072	0.162159547	-0.17257607	-81.5691223
F80	D	0	5.104708195	-14.9198608	0.026176427	0.038469531	0.057799235	-12.9535694
F80	D	1.25	5.104708195	-7.71987486	0.026176427	0.038469531	0.025078701	1.19626534
F80	D	2.5	5.104708195	-0.51988888	0.026176427	0.038469531	-0.00764183	6.346117496
F80	D	3.75	5.104708195	6.680097103	0.026176427	0.038469531	-0.04036237	2.495987415
F80	D	5	5.104708195	13.88008308	0.026176427	0.038469531	-0.0730829	-10.354125
F80	L	0	3.079198599	-0.91400027	0.004937215	0.009034826	0.009864555	-2.74178147

F80	L	1.25	3.079198599	-0.91400027	0.004937215	0.009034826	0.003693036	-1.59928119
F80	L	2.5	3.079198599	-0.91400027	0.004937215	0.009034826	-0.00247848	-0.45678082
F80	L	3.75	3.079198599	-0.91400027	0.004937215	0.009034826	-0.00865	0.68571955
F80	L	5	3.079198599	-0.91400027	0.004937215	0.009034826	-0.01482152	1.828219891
F80	EX	0	-8.04037666	20.18839645	-0.02164051	0.004051509	-0.06266515	55.18261337
F80	EX	1.25	-8.04037666	20.18839645	-0.02164051	0.004051509	-0.03561452	29.94711304
F80	EX	2.5	-8.04037666	20.18839645	-0.02164051	0.004051509	-0.00856388	4.711615562
F80	EX	3.75	-8.04037666	20.18839645	-0.02164051	0.004051509	0.018486755	-20.5238819
F80	EX	5	-8.04037666	20.18839645	-0.02164051	0.004051509	0.04553739	-45.7593803
F80	EY	0	0.013023023	-0.0027871	0.021789886	0.114596426	0.082765184	-0.00870747
F80	EY	1.25	0.013023023	-0.0027871	0.021789886	0.114596426	0.055527825	-0.0052236
F80	EY	2.5	0.013023023	-0.0027871	0.021789886	0.114596426	0.028290469	-0.00173973
F80	EY	3.75	0.013023023	-0.0027871	0.021789886	0.114596426	0.001053109	0.001744147
F80	EY	5	0.013023023	-0.0027871	0.021789886	0.114596426	-0.02618425	0.00522802
F80	COMB1	0	11.05236721	-19.3662338	0.039311256	0.060619161	0.085142367	-19.9311333
F80	COMB1	1.25	11.05236721	-10.7262506	0.039311256	0.060619161	0.036003299	-1.12333155
F80	COMB1	2.5	11.05236721	-2.08626699	0.039311256	0.060619161	-0.01313577	6.88449192
F80	COMB1	3.75	11.05236721	6.553716183	0.039311256	0.060619161	-0.06227484	4.092336178
F80	COMB1	5	11.05236721	15.19369984	0.039311256	0.060619161	-0.11141392	-9.49979877
F80	COMB2	0	-1.9877969	4.940348625	0.01350636	0.083530165	0.025009135	42.64635086
F80	COMB2	1.25	-1.9877969	12.50033379	0.01350636	0.083530165	0.008126184	31.74592209
F80	COMB2	2.5	-1.9877969	20.0603199	0.01350636	0.083530165	-0.00875676	11.39551163
F80	COMB2	3.75	-1.9877969	27.62030411	0.01350636	0.083530165	-0.02563971	-18.4048786
F80	COMB2	5	-1.9877969	35.18029022	0.01350636	0.083530165	-0.04252267	-57.6552544
F80	COMB3	0	3.810846567	-9.59734535	0.045103092	0.164841458	0.13096045	2.908470392
F80	COMB3	1.25	3.810846567	-2.03736019	0.045103092	0.164841458	0.074581586	10.18016052
F80	COMB3	2.5	3.810846567	5.522624969	0.045103092	0.164841458	0.018202724	8.001870155
F80	COMB3	3.75	3.810846567	13.08261013	0.045103092	0.164841458	-0.03817614	-3.62640285
F80	COMB3	5	3.810846567	20.64259529	0.045103092	0.164841458	-0.09455501	-24.7046585
F81	D	0	2.515243769	-13.0446091	-0.02664035	-0.05234296	-0.06916035	-8.16360092
F81	D	1.25	2.515243769	-5.84462309	-0.02664035	-0.05234296	-0.03585991	3.642169476
F81	D	2.5	2.515243769	1.355362892	-0.02664035	-0.05234296	-0.00255948	6.447956562
F81	D	3.75	2.515243769	8.555348396	-0.02664035	-0.05234296	0.030740963	0.253761947
F81	D	5	2.515243769	15.75533485	-0.02664035	-0.05234296	0.064041406	-14.9404154
F81	L	0	1.857085943	0.461246043	-0.01130826	-0.01993698	-0.02929708	1.461903572
F81	L	1.25	1.857085943	0.461246043	-0.01130826	-0.01993698	-0.01516175	0.885345936
F81	L	2.5	1.857085943	0.461246043	-0.01130826	-0.01993698	-0.00102642	0.308788419
F81	L	3.75	1.857085943	0.461246043	-0.01130826	-0.01993698	0.013108908	-0.26776919
F81	L	5	1.857085943	0.461246043	-0.01130826	-0.01993698	0.027244238	-0.84432673
F81	EX	0	-4.27940989	15.65128517	-0.03806234	0.007479203	-0.08085418	38.69156265
F81	EX	1.25	-4.27940989	15.65128517	-0.03806234	0.007479203	-0.03327625	19.12745667
F81	EX	2.5	-4.27940989	15.65128517	-0.03806234	0.007479203	0.014301676	-0.43665186
F81	EX	3.75	-4.27940989	15.65128517	-0.03806234	0.007479203	0.061879605	-20.0007591
F81	EX	5	-4.27940989	15.65128517	-0.03806234	0.007479203	0.109457538	-39.5648689
F81	EY	0	0.013003825	-0.00255672	0.114664815	0.224068984	0.276122212	-0.00532379
F81	EY	1.25	0.013003825	-0.00255672	0.114664815	0.224068984	0.132791176	-0.00212789
F81	EY	2.5	0.013003825	-0.00255672	0.114664815	0.224068984	-0.01053984	0.001068006
F81	EY	3.75	0.013003825	-0.00255672	0.114664815	0.224068984	-0.15387085	0.004263905
F81	EY	5	0.013003825	-0.00255672	0.114664815	0.224068984	-0.29720187	0.007459805
F81	COMB1	0	5.989630222	-14.9155369	-0.05006164	-0.09471071	-0.12986775	-7.45727587
F81	COMB1	1.25	5.989630222	-6.27555418	-0.05006164	-0.09471071	-0.06729069	5.787156582
F81	COMB1	2.5	5.989630222	2.364428997	-0.05006164	-0.09471071	-0.00471364	8.231609344
F81	COMB1	3.75	5.989630222	11.0044117	-0.05006164	-0.09471071	0.057863411	-0.12391634
F81	COMB1	5	5.989630222	19.64439583	-0.05006164	-0.09471071	0.120440468	-19.2794209
F81	COMB2	0	-1.19910502	2.646727562	-0.03480958	0.017082453	-0.07855253	31.93280983
F81	COMB2	1.25	-1.19910502	10.20671272	-0.03480958	0.017082453	-0.03504056	23.89940834
F81	COMB2	2.5	-1.19910502	17.76669884	-0.03480958	0.017082453	0.008471413	6.416024685
F81	COMB2	3.75	-1.19910502	25.32668304	-0.03480958	0.017082453	0.05198339	-20.5173397
F81	COMB2	5	-1.19910502	32.88666916	-0.03480958	0.017082453	0.095495366	-56.9006882
F81	COMB3	0	1.891627908	-8.62407684	0.076873943	0.17638813	0.1826123	4.070970535
F81	COMB3	1.25	1.891627908	-1.0640918	0.076873943	0.17638813	0.086519852	10.12607574
F81	COMB3	2.5	1.891627908	6.495893478	0.076873943	0.17638813	-0.00957258	6.731199265
F81	COMB3	3.75	1.891627908	14.05587864	0.076873943	0.17638813	-0.10566501	-6.11365938
F81	COMB3	5	1.891627908	21.6158638	0.076873943	0.17638813	-0.20175745	-28.4085007
F82	D	0	3.958323956	-14.3609142	-0.0001645	0.000147613	0.004671418	-12.8217487
F82	D	1.25	3.958323956	-7.16092777	-0.0001645	0.000147613	0.004877038	0.629402757
F82	D	2.5	3.958323956	0.039057828	-0.0001645	0.000147613	0.005082658	5.080572128
F82	D	3.75	3.958323956	7.239044189	-0.0001645	0.000147613	0.005288278	0.531758189
F82	D	5	3.958323956	14.43902969	-0.0001645	0.000147613	0.005493898	-13.0170383
F82	L	0	2.621016026	0.067495085	-0.0007408	0.000733357	0.00264887	-0.24893507
F82	L	1.25	2.621016026	0.067495085	-0.0007408	0.000733357	0.003574873	-0.33330393
F82	L	2.5	2.621016026	0.067495085	-0.0007408	0.000733357	0.004500876	-0.41767278
F82	L	3.75	2.621016026	0.067495085	-0.0007408	0.000733357	0.00542688	-0.50204164
F82	L	5	2.621016026	0.067495085	-0.0007408	0.000733357	0.006352882	-0.58641052
F82	EX	0	-2.26112723	16.44281006	0.030643648	0.075089514	0.076327212	41.15759659
F82	EX	1.25	-2.26112723	16.44281006	0.030643648	0.075089514	0.038022652	20.60408211
F82	EX	2.5	-2.26112723	16.44281006	0.030643648	0.075089514	-0.00028191	0.050571065
F82	EX	3.75	-2.26112723	16.44281006	0.030643648	0.075089514	-0.03858647	-20.5029411
F82	EX	5	-2.26112723	16.44281006	0.030643648	0.075089514	-0.07689103	-41.0564537
F82	EY	0	0.020033868	-4.3172E-07	-0.00014541	-7.5477E-05	-0.06070589	-0.00239823
F82	EY	1.25	0.020033868	-4.3172E-07	-0.00014541	-7.5477E-05	-0.06052413	-0.00239769
F82	EY	2.5	0.020033868	-4.3172E-07	-0.00014541	-7.5477E-05	-0.06034237	-0.00239715
F82	EY	3.75	0.020033868	-4.3172E-07	-0.00014541	-7.5477E-05	-0.06016061	-0.00239661
F82	EY	5	0.020033868	-4.3172E-07	-0.00014541	-7.5477E-05	-0.05997885	-0.00239607

F84	COMB3	5	7.644575596	21.86856651	-0.05468385	-0.15147932	0.160700753	-30.6545429
F85	D	0	-2.01288891	-47.2341728	-0.01067711	-0.02904424	-0.03897524	-47.1264687
F85	D	1.5	-2.01288891	-23.5941887	-0.01067711	-0.02904424	-0.02295957	5.994808197
F85	D	3	-2.01288891	0.045799244	-0.01067711	-0.02904424	-0.0069439	23.65610123
F85	D	4.5	-2.01288891	23.6857872	-0.01067711	-0.02904424	0.009071769	5.857410431
F85	D	6	-2.01288891	47.32577133	-0.01067711	-0.02904424	0.025087437	-47.4012642
F85	L	0	1.040742993	-0.0087068	0.000391602	0.003589758	-2.8012E-05	-0.05169833
F85	L	1.5	1.040742993	-0.0087068	0.000391602	0.003589758	-0.00061541	-0.03863813
F85	L	3	1.040742993	-0.0087068	0.000391602	0.003589758	-0.00120282	-0.02557794
F85	L	4.5	1.040742993	-0.0087068	0.000391602	0.003589758	-0.00179022	-0.01251774
F85	L	6	1.040742993	-0.0087068	0.000391602	0.003589758	-0.00237762	0.000542452
F85	EX	0	-0.25969741	0.187279597	-0.08482172	-0.35217902	-0.31130654	0.56552881
F85	EX	1.5	-0.25969741	0.187279597	-0.08482172	-0.35217902	-0.18407395	0.284609318
F85	EX	3	-0.25969741	0.187279597	-0.08482172	-0.35217902	-0.05684136	0.003689905
F85	EX	4.5	-0.25969741	0.187279597	-0.08482172	-0.35217902	0.070391238	-0.27722952
F85	EX	6	-0.25969741	0.187279597	-0.08482172	-0.35217902	0.197623819	-0.55814892
F85	EY	0	-2.14052129	10.27408314	-0.02034329	0.000573404	-0.06094554	30.89426804
F85	EY	1.5	-2.14052129	10.27408314	-0.02034329	0.000573404	-0.0304306	15.48314285
F85	EY	3	-2.14052129	10.27408314	-0.02034329	0.000573404	8.43454E-05	0.072018199
F85	EY	4.5	-2.14052129	10.27408314	-0.02034329	0.000573404	0.030599287	-15.3391075
F85	EY	6	-2.14052129	10.27408314	-0.02034329	0.000573404	0.061114226	-30.7502327
F85	COMB1	0	-0.75027788	-56.6949387	-0.01218597	-0.02910948	-0.0468151	-56.6344795
F85	COMB1	1.5	-0.75027788	-28.3269558	-0.01218597	-0.02910948	-0.02853614	7.131948471
F85	COMB1	3	-0.75027788	0.041028216	-0.01218597	-0.02910948	-0.01025719	28.34639549
F85	COMB1	4.5	-0.75027788	28.40901375	-0.01218597	-0.02910948	0.008021772	7.008863926
F85	COMB1	6	-0.75027788	56.7769928	-0.01218597	-0.02910948	0.026300728	-56.8806496
F85	COMB2	0	-2.72875023	-46.1684532	-0.10528623	-0.39369032	-0.38233292	-39.1820602
F85	COMB2	1.5	-2.72875023	-21.3464699	-0.10528623	-0.39369032	-0.22440359	11.4541378
F85	COMB2	3	-2.72875023	3.475517035	-0.10528623	-0.39369032	-0.06647421	24.85735321
F85	COMB2	4.5	-2.72875023	28.29750443	-0.10528623	-0.39369032	0.091455139	1.02758646
F85	COMB2	6	-2.72875023	53.11948776	-0.10528623	-0.39369032	0.249384493	-60.0351639
F85	COMB3	0	-4.11505127	-38.7518463	-0.05916691	-0.1397	-0.20298719	-16.8819561
F85	COMB3	1.5	-4.11505127	-13.9298601	-0.05916691	-0.1397	-0.11423682	22.62932968
F85	COMB3	3	-4.11505127	10.89212704	-0.05916691	-0.1397	-0.02548645	24.90763092
F85	COMB3	4.5	-4.11505127	35.71411133	-0.05916691	-0.1397	0.06326393	-10.0470524
F85	COMB3	6	-4.11505127	60.53609467	-0.05916691	-0.1397	0.1520143	-82.2347183
F86	D	0	3.661863804	-17.287878	0.000410911	0.027679583	-0.00250475	-17.389185
F86	D	1.5	3.661863804	-8.64789391	0.000410911	0.027679583	-0.00312112	2.06264472
F86	D	3	3.661863804	-0.0079095	0.000410911	0.027679583	-0.00373749	8.554497719
F86	D	4.5	3.661863804	8.632074356	0.000410911	0.027679583	-0.00435386	2.086373568
F86	D	6	3.661863804	17.27205849	0.000410911	0.027679583	-0.00497022	-17.3417282
F86	L	0	2.024280548	-0.01695563	0.00341586	0.012756034	0.009833976	-0.09780119
F86	L	1.5	2.024280548	-0.01695563	0.00341586	0.012756034	0.004710185	-0.07236775
F86	L	3	2.024280548	-0.01695563	0.00341586	0.012756034	-0.0004136	-0.0469343
F86	L	4.5	2.024280548	-0.01695563	0.00341586	0.012756034	-0.00553739	-0.02150084
F86	L	6	2.024280548	-0.01695563	0.00341586	0.012756034	-0.01066118	0.003932606
F86	EX	0	-0.01800053	0.170454383	-0.08984448	-0.18124731	-0.30104282	0.512072861
F86	EX	1.5	-0.01800053	0.170454383	-0.08984448	-0.18124731	-0.16627608	0.256391227
F86	EX	3	-0.01800053	0.170454383	-0.08984448	-0.18124731	-0.03150934	0.00070962
F86	EX	4.5	-0.01800053	0.170454383	-0.08984448	-0.18124731	0.103257395	-0.25497201
F86	EX	6	-0.01800053	0.170454383	-0.08984448	-0.18124731	0.23802413	-0.51065361
F86	EY	0	-1.90506804	9.822782516	-0.06392621	6.42381E-05	-0.19469856	29.53008461
F86	EY	1.5	-1.90506804	9.822782516	-0.06392621	6.42381E-05	-0.09880924	14.79591084
F86	EY	3	-1.90506804	9.822782516	-0.06392621	6.42381E-05	-0.00291992	0.061734822
F86	EY	4.5	-1.90506804	9.822782516	-0.06392621	6.42381E-05	0.092969395	-14.6724405
F86	EY	6	-1.90506804	9.822782516	-0.06392621	6.42381E-05	0.188858703	-29.4066143
F86	COMB1	0	7.633085251	-20.7725811	0.005958469	0.053625155	0.012728656	-21.0235043
F86	COMB1	1.5	7.633085251	-10.4046011	0.005958469	0.053625155	0.003790951	2.35938549
F86	COMB1	3	7.633085251	-0.03662041	0.005958469	0.053625155	-0.00514675	10.1903019
F86	COMB1	4.5	7.633085251	10.33136082	0.005958469	0.053625155	-0.01408446	2.469246864
F86	COMB1	6	7.633085251	20.69934082	0.005958469	0.053625155	-0.02302216	-20.8037815
F86	COMB2	0	3.86387825	-14.8870153	-0.11161833	-0.15448901	-0.37244165	-8.45747948
F86	COMB2	1.5	3.86387825	-5.81503248	-0.11161833	-0.15448901	-0.20501412	7.069057941
F86	COMB2	3	3.86387825	3.256950617	-0.11161833	-0.15448901	-0.03758659	8.9876194
F86	COMB2	4.5	3.86387825	12.32893372	-0.11161833	-0.15448901	0.12984094	-2.70179534
F86	COMB2	6	3.86387825	21.40091705	-0.11161833	-0.15448901	0.29726845	-27.9991856
F86	COMB3	0	2.47661376	-7.78999805	-0.09391607	-0.02394374	-0.29879427	12.87844086
F86	COMB3	1.5	2.47661376	1.281985283	-0.09391607	-0.02394374	-0.15792014	17.75945091
F86	COMB3	3	2.47661376	10.35396862	-0.09391607	-0.02394374	-0.01704601	9.032483101
F86	COMB3	4.5	2.47661376	19.425951	-0.09391607	-0.02394374	0.123828113	-13.3024597
F86	COMB3	6	2.47661376	28.49793434	-0.09391607	-0.02394374	0.264702231	-49.2453766
F87	D	0	3.1587677	-17.5716858	0.003994494	0.071378253	0.012079462	-18.3285732
F87	D	1.5	3.1587677	-8.93170166	0.003994494	0.071378253	0.00608772	1.548968911
F87	D	3	3.1587677	-0.29171753	0.003994494	0.071378253	9.59779E-05	8.466533661
F87	D	4.5	3.1587677	8.348266602	0.003994494	0.071378253	-0.00589576	2.424121618
F87	D	6	3.1587677	16.98825073	0.003994494	0.071378253	-0.01188751	-16.5782681
F87	L	0	1.578915834	-0.09580695	0.003990464	0.032604847	0.012450768	-0.35902855
F87	L	1.5	1.578915834	-0.09580695	0.003990464	0.032604847	0.00646507	-0.21531813
F87	L	3	1.578915834	-0.09580695	0.003990464	0.032604847	0.000479373	-0.07160768
F87	L	4.5	1.578915834	-0.09580695	0.003990464	0.032604847	-0.00550632	0.072102763
F87	L	6	1.578915834	-0.09580695	0.003990464	0.032604847	-0.01149202	0.215813205
F87	EX	0	-0.57915163	0.222701043	-0.10439789	-0.18472449	-0.3495158	0.671402752
F87	EX	1.5	-0.57915163	0.222701043	-0.10439789	-0.18472449	-0.19291891	0.337351173
F87	EX	3	-0.57915163	0.222701043	-0.10439789	-0.18472449	-0.03632206	0.003299568

F87	EX	4.5	-0.57915163	0.222701043	-0.10439789	-0.18472449	0.120274797	-0.33075204
F87	EX	6	-0.57915163	0.222701043	-0.10439789	-0.18472449	0.276871651	-0.66480362
F87	EY	0	1.606147647	8.992928505	-0.04669762	0.000397939	-0.14296722	26.96621132
F87	EY	1.5	1.606147647	8.992928505	-0.04669762	0.000397939	-0.07292078	13.47681808
F87	EY	3	1.606147647	8.992928505	-0.04669762	0.000397939	-0.00287434	-0.01257689
F87	EY	4.5	1.606147647	8.992928505	-0.04669762	0.000397939	0.067172103	-13.5019722
F87	EY	6	1.606147647	8.992928505	-0.04669762	0.000397939	0.13721855	-26.9913673
F87	COMB1	0	6.316786766	-21.2393131	0.011178137	0.137821659	0.034416582	-22.5687332
F87	COMB1	1.5	6.316786766	-10.8713331	0.011178137	0.137821659	0.017649377	1.514253736
F87	COMB1	3	6.316786766	-0.50335217	0.011178137	0.137821659	0.00088217	10.04526901
F87	COMB1	4.5	6.316786766	9.864628792	0.011178137	0.137821659	-0.01588504	3.02431035
F87	COMB1	6	6.316786766	20.2326107	0.011178137	0.137821659	-0.03265224	-19.5486202
F87	COMB2	0	3.720579147	-15.4171801	-0.11731036	-0.10584681	-0.39017808	-10.1688375
F87	COMB2	1.5	3.720579147	-6.34519768	-0.11731036	-0.10584681	-0.21421252	6.15294838
F87	COMB2	3	3.720579147	2.726785421	-0.11731036	-0.10584681	-0.03824697	8.866757393
F87	COMB2	4.5	3.720579147	11.798769	-0.11731036	-0.10584681	0.137718573	-2.02740955
F87	COMB2	6	3.720579147	20.87075233	-0.11731036	-0.10584681	0.313684136	-26.5295525
F87	COMB3	0	5.318087101	-8.96772289	-0.07646663	0.027447309	-0.24360763	9.167918205
F87	COMB3	1.5	5.318087101	0.104260013	-0.07646663	0.027447309	-0.12890767	15.81551647
F87	COMB3	3	5.318087101	9.176242828	-0.07646663	0.027447309	-0.01420772	8.855137825
F87	COMB3	4.5	5.318087101	18.24822617	-0.07646663	0.027447309	0.100492224	-11.7132177
F87	COMB3	6	5.318087101	27.3202095	-0.07646663	0.027447309	0.215192184	-45.8895493
F88	D	0	3.160115004	-17.573534	-0.00379665	-0.07039443	-0.01163498	-18.334219
F88	D	1.5	3.160115004	-8.93354988	-0.00379665	-0.07039443	-0.00594001	1.546096921
F88	D	3	3.160115004	-0.29356644	-0.00379665	-0.07039443	-0.00024504	8.466435432
F88	D	4.5	3.160115004	8.346417427	-0.00379665	-0.07039443	0.005449934	2.426796436
F88	D	6	3.160115004	16.9864006	-0.00379665	-0.07039443	0.011144903	-16.5728207
F88	L	0	1.617610335	-0.09772489	-0.00408276	-0.03157324	-0.01334153	-0.3653397
F88	L	1.5	1.617610335	-0.09772489	-0.00408276	-0.03157324	-0.00721739	-0.21875232
F88	L	3	1.617610335	-0.09772489	-0.00408276	-0.03157324	-0.00109325	-0.07216497
F88	L	4.5	1.617610335	-0.09772489	-0.00408276	-0.03157324	0.005030886	0.074422397
F88	L	6	1.617610335	-0.09772489	-0.00408276	-0.03157324	0.011155026	0.221009761
F88	EX	0	0.578466058	-0.22406937	-0.10117141	-0.17585787	-0.33864066	-0.67537606
F88	EX	1.5	0.578466058	-0.22406937	-0.10117141	-0.17585787	-0.18688352	-0.33927202
F88	EX	3	0.578466058	-0.22406937	-0.10117141	-0.17585787	-0.03512639	-0.00316793
F88	EX	4.5	0.578466058	-0.22406937	-0.10117141	-0.17585787	0.116630763	0.332936138
F88	EX	6	0.578466058	-0.22406937	-0.10117141	-0.17585787	0.268387884	0.669040203
F88	EY	0	1.598506927	8.993185997	0.046730053	-0.00039781	0.143070683	26.96703339
F88	EY	1.5	1.598506927	8.993185997	0.046730053	-0.00039781	0.072975591	13.47725201
F88	EY	3	1.598506927	8.993185997	0.046730053	-0.00039781	0.002880504	-0.01252907
F88	EY	4.5	1.598506927	8.993185997	0.046730053	-0.00039781	-0.06721458	-13.5023108
F88	EY	6	1.598506927	8.993185997	0.046730053	-0.00039781	-0.13730966	-26.9920902
F88	COMB1	0	6.38031435	-21.2446022	-0.01108839	-0.1349905	-0.03530842	-22.5856056
F88	COMB1	1.5	6.38031435	-10.8766203	-0.01108839	-0.1349905	-0.01867584	1.505312562
F88	COMB1	3	6.38031435	-0.50863957	-0.01108839	-0.1349905	-0.00204325	10.04425812
F88	COMB1	4.5	6.38031435	9.859340668	-0.01108839	-0.1349905	0.014589339	3.031231642
F88	COMB1	6	6.38031435	20.22732162	-0.01108839	-0.1349905	0.031221926	-19.5337696
F88	COMB2	0	4.929910183	-15.8820524	-0.09526499	-0.26599792	-0.32184514	-11.5704107
F88	COMB2	1.5	4.929910183	-6.81006908	-0.09526499	-0.26599792	-0.17894763	5.448682785
F88	COMB2	3	4.929910183	2.261913776	-0.09526499	-0.26599792	-0.03605011	8.859799385
F88	COMB2	4.5	4.929910183	11.33389664	-0.09526499	-0.26599792	0.106847405	-1.33705962
F88	COMB2	6	4.929910183	20.40587997	-0.09526499	-0.26599792	0.249744892	-25.1418953
F88	COMB3	0	5.688316822	-9.11073112	0.011925011	-0.13967264	0.027133092	8.73663044
F88	COMB3	1.5	5.688316822	-0.03874717	0.011925011	-0.13967264	0.009245571	15.59873867
F88	COMB3	3	5.688316822	9.03323555	0.011925011	-0.13967264	-0.00864195	8.852870941
F88	COMB3	4.5	5.688316822	18.10521889	0.011925011	-0.13967264	-0.02652946	-11.5009718
F88	COMB3	6	5.688316822	27.17720222	0.011925011	-0.13967264	-0.04441698	-45.4627914
F89	D	0	3.731791019	-17.2910557	-0.00080222	-0.02669995	0.00047985	-17.401165
F89	D	1.5	3.731791019	-8.65107155	-0.00080222	-0.02669995	0.001683177	2.05543232
F89	D	3	3.731791019	-0.01108722	-0.00080222	-0.02669995	0.002886503	8.552051544
F89	D	4.5	3.731791019	8.628896713	-0.00080222	-0.02669995	0.00408983	2.088694096
F89	D	6	3.731791019	17.26888084	-0.00080222	-0.02669995	0.005293156	-17.3346405
F89	L	0	2.701626539	-0.03190652	-0.00377375	-0.01124738	-0.01181212	-0.15783508
F89	L	1.5	2.701626539	-0.03190652	-0.00377375	-0.01124738	-0.00615149	-0.1099753
F89	L	3	2.701626539	-0.03190652	-0.00377375	-0.01124738	-0.00049086	-0.06211551
F89	L	4.5	2.701626539	-0.03190652	-0.00377375	-0.01124738	0.005169774	-0.01425573
F89	L	6	2.701626539	-0.03190652	-0.00377375	-0.01124738	0.010830406	0.033604059
F89	EX	0	0.005068453	-0.16984931	-0.07925084	-0.14881189	-0.26779827	-0.5099597
F89	EX	1.5	0.005068453	-0.16984931	-0.07925084	-0.14881189	-0.14892201	-0.25518569
F89	EX	3	0.005068453	-0.16984931	-0.07925084	-0.14881189	-0.03004573	-0.00041171
F89	EX	4.5	0.005068453	-0.16984931	-0.07925084	-0.14881189	0.088830538	0.254362285
F89	EX	6	0.005068453	-0.16984931	-0.07925084	-0.14881189	0.207706809	0.509136319
F89	EY	0	-1.90528989	9.82281971	0.06389308	-6.4094E-05	0.194592267	29.53019905
F89	EY	1.5	-1.90528989	9.82281971	0.06389308	-6.4094E-05	0.098752633	14.79596806
F89	EY	3	-1.90528989	9.82281971	0.06389308	-6.4094E-05	0.002913	0.061737865
F89	EY	4.5	-1.90528989	9.82281971	0.06389308	-6.4094E-05	-0.09292664	-14.672492
F89	EY	6	-1.90528989	9.82281971	0.06389308	-6.4094E-05	-0.18876627	-29.4067211
F89	COMB1	0	8.800751686	-20.8003159	-0.00700067	-0.05003575	-0.01832357	-21.133934
F89	COMB1	1.5	8.800751686	-10.4323359	-0.00700067	-0.05003575	-0.00782257	2.290558338
F89	COMB1	3	8.800751686	-0.06435509	-0.00700067	-0.05003575	0.002678431	10.16307735
F89	COMB1	4.5	8.800751686	10.30362511	-0.00700067	-0.05003575	0.013179435	2.483623981
F89	COMB1	6	8.800751686	20.67160606	-0.00700067	-0.05003575	0.023680437	-20.7478027
F89	COMB2	0	4.174472332	-15.2472639	-0.06392936	-0.18561837	-0.21909162	-9.54673672
F89	COMB2	1.5	4.174472332	-6.17528152	-0.06392936	-0.18561837	-0.12319759	6.520174503

F92	L	1.25	1.793595076	0.304820657	-0.00804769	-0.0318189	-0.01001446	0.630461693
F92	L	2.5	1.793595076	0.304820657	-0.00804769	-0.0318189	4.51523E-05	0.249435902
F92	L	3.75	1.793595076	0.304820657	-0.00804769	-0.0318189	0.010104764	-0.1315899
F92	L	5	1.793595076	0.304820657	-0.00804769	-0.0318189	0.020164378	-0.51261574
F92	EX	0	-3.12699389	14.53928757	0.061927907	0.00872644	0.163346186	35.92196655
F92	EX	1.25	-3.12699389	14.53928757	0.061927907	0.00872644	0.085936308	17.74785614
F92	EX	2.5	-3.12699389	14.53928757	0.061927907	0.00872644	0.008526418	-0.42625421
F92	EX	3.75	-3.12699389	14.53928757	0.061927907	0.00872644	-0.06888346	-18.6003628
F92	EX	5	-3.12699389	14.53928757	0.061927907	0.00872644	-0.14629336	-36.7744713
F92	EY	0	-0.00139596	-0.00010505	0.096407086	0.188282788	0.230532572	-0.00019247
F92	EY	1.25	-0.00139596	-0.00010505	0.096407086	0.188282788	0.110023722	-6.1151E-05
F92	EY	2.5	-0.00139596	-0.00010505	0.096407086	0.188282788	-0.01048514	7.01656E-05
F92	EY	3.75	-0.00139596	-0.00010505	0.096407086	0.188282788	-0.13099401	0.000201482
F92	EY	5	-0.00139596	-0.00010505	0.096407086	0.188282788	-0.25150287	0.000332799
F92	COMB1	0	6.925156116	-15.9443426	-0.03412964	-0.16455455	-0.08280303	-10.2810555
F92	COMB1	1.25	6.925156116	-7.30435944	-0.03412964	-0.16455455	-0.04014098	4.24938345
F92	COMB1	2.5	6.925156116	1.335624218	-0.03412964	-0.16455455	0.002521064	7.97984314
F92	COMB1	3.75	6.925156116	9.975606918	-0.03412964	-0.16455455	0.045183111	0.910323024
F92	COMB1	5	6.925156116	18.61559105	-0.03412964	-0.16455455	0.087845162	-16.959177
F92	COMB2	0	0.876582623	0.766099513	0.07333193	-0.04112078	0.191008776	27.08578682
F92	COMB2	1.25	0.876582623	8.326085091	0.07333193	-0.04112078	0.099343874	21.40316963
F92	COMB2	2.5	0.876582623	15.88607025	0.07333193	-0.04112078	0.007678965	6.270573616
F92	COMB2	3.75	0.876582623	23.44605637	0.07333193	-0.04112078	-0.08398594	-18.312006
F92	COMB2	5	0.876582623	31.00604057	0.07333193	-0.04112078	-0.17565085	-52.3445663
F92	COMB3	0	3.126992226	-9.70226479	0.099603042	0.090984032	0.242840961	1.221829653
F92	COMB3	1.25	3.126992226	-2.14227939	0.099603042	0.090984032	0.118337169	8.624670029
F92	COMB3	2.5	3.126992226	5.417706013	0.099603042	0.090984032	-0.00616664	6.577528
F92	COMB3	3.75	3.126992226	12.97769165	0.099603042	0.090984032	-0.13067044	-4.91959524
F92	COMB3	5	3.126992226	20.53767586	0.099603042	0.090984032	-0.25517425	-25.8667011
F93	D	0	4.02066803	-14.3598385	3.58026E-05	0.000100096	0.004762948	-12.3951263
F93	D	1.25	4.02066803	-7.15985203	3.58026E-05	0.000100096	0.004718194	1.054680705
F93	D	2.5	4.02066803	0.040133983	3.58026E-05	0.000100096	0.004673441	5.504504681
F93	D	3.75	4.02066803	7.240119934	3.58026E-05	0.000100096	0.004628688	0.954345703
F93	D	5	4.02066803	14.44010639	3.58026E-05	0.000100096	0.004583935	-12.5957956
F93	L	0	2.01180172	0.071882039	-0.00016548	0.000464985	0.002200035	-0.04606051
F93	L	1.25	2.01180172	0.071882039	-0.00016548	0.000464985	0.00240688	-0.13591306
F93	L	2.5	2.01180172	0.071882039	-0.00016548	0.000464985	0.002613724	-0.22576563
F93	L	3.75	2.01180172	0.071882039	-0.00016548	0.000464985	0.002820569	-0.31561819
F93	L	5	2.01180172	0.071882039	-0.00016548	0.000464985	0.003027414	-0.40547076
F93	EX	0	-1.18192148	14.94771385	0.1227988	0.07197497	0.308149904	37.39334488
F93	EX	1.25	-1.18192148	14.94771385	0.1227988	0.07197497	0.154651403	18.70870018
F93	EX	2.5	-1.18192148	14.94771385	0.1227988	0.07197497	0.001152897	0.024057789
F93	EX	3.75	-1.18192148	14.94771385	0.1227988	0.07197497	-0.1523456	-18.6605854
F93	EX	5	-1.18192148	14.94771385	0.1227988	0.07197497	-0.30584413	-37.3452263
F93	EY	0	-0.00495649	2.43461E-07	-9.658E-05	-5.2446E-05	-0.05367801	-1.7085E-05
F93	EY	1.25	-0.00495649	2.43461E-07	-9.658E-05	-5.2446E-05	-0.05355728	-1.7389E-05
F93	EY	2.5	-0.00495649	2.43461E-07	-9.658E-05	-5.2446E-05	-0.05343656	-1.7694E-05
F93	EY	3.75	-0.00495649	2.43461E-07	-9.658E-05	-5.2446E-05	-0.05331583	-1.7998E-05
F93	EY	5	-0.00495649	2.43461E-07	-9.658E-05	-5.2446E-05	-0.05319511	-1.8302E-05
F93	COMB1	0	8.043684006	-17.1167946	-0.0002218	0.000864092	0.009235593	-14.9478483
F93	COMB1	1.25	8.043684006	-8.47681141	-0.0002218	0.000864092	0.009512841	1.048155904
F93	COMB1	2.5	8.043684006	0.163172051	-0.0002218	0.000864092	0.009790089	6.244180679
F93	COMB1	3.75	8.043684006	8.803154945	-0.0002218	0.000864092	0.010067336	0.640225768
F93	COMB1	5	8.043684006	17.44313812	-0.0002218	0.000864092	0.010344584	-15.7637081
F93	COMB2	0	3.630568981	0.41569674	0.1270518	0.074729145	0.307720691	25.67271423
F93	COMB2	1.25	3.630568981	7.975682259	0.1270518	0.074729145	0.148905933	20.42810249
F93	COMB2	2.5	3.630568981	15.53566742	0.1270518	0.074729145	-0.00990883	5.73350811
F93	COMB2	3.75	3.630568981	23.09565353	0.1270518	0.074729145	-0.16872358	-18.411068
F93	COMB2	5	3.630568981	30.65563774	0.1270518	0.074729145	-0.32753834	-52.0056229
F93	COMB3	0	4.477909565	-10.3466568	0.03856568	0.022868618	0.046399418	-1.25050604
F93	COMB3	1.25	4.477909565	-2.78667164	0.03856568	0.022868618	-0.00180768	6.957824707
F93	COMB3	2.5	4.477909565	4.773313522	0.03856568	0.022868618	-0.05001479	5.716173172
F93	COMB3	3.75	4.477909565	12.33329868	0.03856568	0.022868618	-0.09822189	-4.97546005
F93	COMB3	5	4.477909565	19.89328384	0.03856568	0.022868618	-0.14642899	-25.117075
F94	D	0	3.443633318	-14.9700193	0.017454425	0.094836436	0.045628648	-13.1805525
F94	D	1.25	3.443633318	-7.77003288	0.017454425	0.094836436	0.023810618	1.031980515
F94	D	2.5	3.443633318	-0.57004708	0.017454425	0.094836436	0.001992584	6.244530678
F94	D	3.75	3.443633318	6.629939079	0.017454425	0.094836436	-0.01982545	2.457098246
F94	D	5	3.443633318	13.82992458	0.017454425	0.094836436	-0.04164348	-10.3303165
F94	L	0	1.804229259	-0.4075036	0.007816661	0.031514637	0.019595778	-0.79721415
F94	L	1.25	1.804229259	-0.4075036	0.007816661	0.031514637	0.009824952	-0.28783464
F94	L	2.5	1.804229259	-0.4075036	0.007816661	0.031514637	5.41255E-05	0.221544877
F94	L	3.75	1.804229259	-0.4075036	0.007816661	0.031514637	-0.0097167	0.730924368
F94	L	5	1.804229259	-0.4075036	0.007816661	0.031514637	-0.01948753	1.240303874
F94	EX	0	0.747454941	14.44215107	0.058315188	0.008130349	0.137674421	36.56725693
F94	EX	1.25	0.747454941	14.44215107	0.058315188	0.008130349	0.064780436	18.51456833
F94	EX	2.5	0.747454941	14.44215107	0.058315188	0.008130349	-0.00811354	0.461879045
F94	EX	3.75	0.747454941	14.44215107	0.058315188	0.008130349	-0.08100753	-17.5908089
F94	EX	5	0.747454941	14.44215107	0.058315188	0.008130349	-0.15390152	-35.6435013
F94	EY	0	-0.0013872	0.000106368	-0.09630199	-0.18823865	-0.2512081	0.000336196
F94	EY	1.25	-0.0013872	0.000106368	-0.09630199	-0.18823865	-0.13083062	0.000203236
F94	EY	2.5	-0.0013872	0.000106368	-0.09630199	-0.18823865	-0.01045313	7.0277E-05
F94	EY	3.75	-0.0013872	0.000106368	-0.09630199	-0.18823865	0.109924361	-6.2682E-05
F94	EY	5	-0.0013872	0.000106368	-0.09630199	-0.18823865	0.230301857	-0.00019564

F96	COMB3	6	-2.49347019	60.45089722	-0.00933505	-0.03546287	0.033300437	-82.0715179
F97	D	0	3.671132803	-17.1304054	0.010881631	0.017807119	0.029073423	-16.9146156
F97	D	1.5	3.671132803	-8.49042225	0.010881631	0.017807119	0.012750974	2.301006317
F97	D	3	3.671132803	0.14956221	0.010881631	0.017807119	-0.00357147	8.556652069
F97	D	4.5	3.671132803	8.789546013	0.010881631	0.017807119	-0.01989392	1.852319717
F97	D	6	3.671132803	17.4295311	0.010881631	0.017807119	-0.03621637	-17.8119907
F97	L	0	2.037704706	0.069277748	0.002927487	0.006590686	0.008140001	0.162834927
F97	L	1.5	2.037704706	0.069277748	0.002927487	0.006590686	0.00374877	0.058918294
F97	L	3	2.037704706	0.069277748	0.002927487	0.006590686	-0.00064246	-0.04499834
F97	L	4.5	2.037704706	0.069277748	0.002927487	0.006590686	-0.00503369	-0.14891498
F97	L	6	2.037704706	0.069277748	0.002927487	0.006590686	-0.00942492	-0.25283161
F97	EX	0	-0.01177274	0.176755369	-0.00323601	-0.05533935	0.011048898	0.531555891
F97	EX	1.5	-0.01177274	0.176755369	-0.00323601	-0.05533935	0.015902912	0.266422808
F97	EX	3	-0.01177274	0.176755369	-0.00323601	-0.05533935	0.020756928	0.001289725
F97	EX	4.5	-0.01177274	0.176755369	-0.00323601	-0.05533935	0.025610942	-0.26384336
F97	EX	6	-0.01177274	0.176755369	-0.00323601	-0.05533935	0.030464958	-0.52897644
F97	EY	0	-0.51631492	9.773423195	-0.05972746	4.96353E-06	-0.18061471	29.309515
F97	EY	1.5	-0.51631492	9.773423195	-0.05972746	4.96353E-06	-0.0910235	14.64937687
F97	EY	3	-0.51631492	9.773423195	-0.05972746	4.96353E-06	-0.00143231	-0.01076049
F97	EY	4.5	-0.51631492	9.773423195	-0.05972746	4.96353E-06	0.088158891	-14.6708975
F97	EY	6	-0.51631492	9.773423195	-0.05972746	4.96353E-06	0.177750111	-29.3310375
F97	COMB1	0	7.665687084	-20.4456425	0.017741935	0.031913642	0.047912106	-20.0370045
F97	COMB1	1.5	7.665687084	-10.0776625	0.017741935	0.031913642	0.021299202	2.855476856
F97	COMB1	3	7.665687084	0.290319055	0.017741935	0.031913642	-0.00531371	10.19598484
F97	COMB1	4.5	7.665687084	10.6583004	0.017741935	0.031913642	-0.03192661	1.984519601
F97	COMB1	6	7.665687084	21.02628136	0.017741935	0.031913642	-0.05853952	-21.7789192
F97	COMB2	0	4.321742535	-14.7035332	-0.00981555	-0.03650112	-0.01236683	-7.92639637
F97	COMB2	1.5	4.321742535	-5.63155031	-0.00981555	-0.03650112	0.002356495	7.324917316
F97	COMB2	3	4.321742535	3.440433025	-0.00981555	-0.03650112	-0.017079821	8.968255043
F97	COMB2	4.5	4.321742535	12.51241684	-0.00981555	-0.03650112	0.031803146	-2.99638319
F97	COMB2	6	4.321742535	21.58440018	-0.00981555	-0.03650112	0.046526473	-28.5689983
F97	COMB3	0	3.950727463	-7.64733028	-0.05138531	0.003346857	-0.15307385	13.2333765
F97	COMB3	1.5	3.950727463	1.4246521	-0.05138531	0.003346857	-0.07599588	17.9003849
F97	COMB3	3	3.950727463	10.49663544	-0.05138531	0.003346857	0.001082089	8.959417343
F97	COMB3	4.5	3.950727463	19.56861877	-0.05138531	0.003346857	0.078160055	-13.5895252
F97	COMB3	6	3.950727463	28.64060211	-0.05138531	0.003346857	0.155238032	-49.7464485
F98	D	0	3.00624156	-17.1571941	0.004242008	0.034804244	0.012725157	-16.8515053
F98	D	1.5	3.00624156	-8.51721096	0.004242008	0.034804244	0.006362144	2.404301167
F98	D	3	3.00624156	0.122773528	0.004242008	0.034804244	-8.6803E-07	8.700129509
F98	D	4.5	3.00624156	8.762758255	0.004242008	0.034804244	-0.00636388	2.035980463
F98	D	6	3.00624156	17.40274048	0.004242008	0.034804244	-0.01272689	-17.5881462
F98	L	0	1.611314058	0.053408317	0.002003174	0.012271364	0.00624006	0.164197937
F98	L	1.5	1.611314058	0.053408317	0.002003174	0.012271364	0.003235298	0.084085457
F98	L	3	1.611314058	0.053408317	0.002003174	0.012271364	0.000230537	0.003972968
F98	L	4.5	1.611314058	0.053408317	0.002003174	0.012271364	-0.00277422	-0.07613952
F98	L	6	1.611314058	0.053408317	0.002003174	0.012271364	-0.00577899	-0.15625201
F98	EX	0	-0.33545575	0.159399495	-0.01922622	-0.06139218	-0.03474972	0.468016744
F98	EX	1.5	-0.33545575	0.159399495	-0.01922622	-0.06139218	-0.00591038	0.228917465
F98	EX	3	-0.33545575	0.159399495	-0.01922622	-0.06139218	0.022928946	-0.01018179
F98	EX	4.5	-0.33545575	0.159399495	-0.01922622	-0.06139218	0.051768277	-0.24928106
F98	EX	6	-0.33545575	0.159399495	-0.01922622	-0.06139218	0.080607608	-0.48838034
F98	EY	0	1.529028416	9.015065193	-0.0424612	3.12133E-05	-0.12884969	27.03445244
F98	EY	1.5	1.529028416	9.015065193	-0.0424612	3.12133E-05	-0.06515788	13.51185322
F98	EY	3	1.529028416	9.015065193	-0.0424612	3.12133E-05	-0.00146607	-0.01074725
F98	EY	4.5	1.529028416	9.015065193	-0.0424612	3.12133E-05	0.06222574	-13.5333471
F98	EY	6	1.529028416	9.015065193	-0.0424612	3.12133E-05	0.125917539	-27.0559464
F98	COMB1	0	6.185592651	-20.5031796	0.008295488	0.061399274	0.025254283	-19.9590893
F98	COMB1	1.5	6.185592651	-10.1351995	0.008295488	0.061399274	0.012811051	3.019697905
F98	COMB1	3	6.185592651	0.232781544	0.008295488	0.061399274	0.000367818	10.44651127
F98	COMB1	4.5	6.185592651	10.60076237	0.008295488	0.061399274	-0.01207542	2.321353197
F98	COMB1	6	6.185592651	20.96874237	0.008295488	0.061399274	-0.02451865	-21.3557777
F98	COMB2	0	3.798564911	-14.9935064	-0.02818931	-0.02312114	-0.06122657	-8.64210892
F98	COMB2	1.5	3.798564911	-5.92152357	-0.02818931	-0.02312114	-0.01894261	7.044166088
F98	COMB2	3	3.798564911	3.150459766	-0.02818931	-0.02312114	0.023341356	9.122463226
F98	COMB2	4.5	3.798564911	12.22244358	-0.02818931	-0.02312114	0.065625317	-2.40721488
F98	COMB2	6	3.798564911	21.29442596	-0.02818931	-0.02312114	0.107909285	-27.5448704
F98	COMB3	0	5.163928986	-8.48220158	-0.04555541	0.021104174	-0.13091129	10.89124107
F98	COMB3	1.5	5.163928986	0.589781761	-0.04555541	0.021104174	-0.06257817	16.81055832
F98	COMB3	3	5.163928986	9.661765099	-0.04555541	0.021104174	0.005754954	9.121894836
F98	COMB3	4.5	5.163928986	18.73374939	-0.04555541	0.021104174	0.074088082	-12.1747427
F98	COMB3	6	5.163928986	27.80573082	-0.04555541	0.021104174	0.142421201	-47.0793571
F99	D	0	3.005666256	-17.1577969	-0.00442663	-0.03511728	-0.01345663	-16.8531609
F99	D	1.5	3.005666256	-8.51781178	-0.00442663	-0.03511728	-0.00681669	2.403547049
F99	D	3	3.005666256	0.122172371	-0.00442663	-0.03511728	-0.00017675	8.700277328
F99	D	4.5	3.005666256	8.762156487	-0.00442663	-0.03511728	0.00646319	2.037029743
F99	D	6	3.005666256	17.40213966	-0.00442663	-0.03511728	0.013103128	-17.586195
F99	L	0	1.657999158	0.056715649	-0.00162997	-0.01286372	-0.00582485	0.171881646
F99	L	1.5	1.657999158	0.056715649	-0.00162997	-0.01286372	-0.00337991	0.086808167
F99	L	3	1.657999158	0.056715649	-0.00162997	-0.01286372	-0.00093496	0.001734689
F99	L	4.5	1.657999158	0.056715649	-0.00162997	-0.01286372	0.001509989	-0.08333879
F99	L	6	1.657999158	0.056715649	-0.00162997	-0.01286372	0.003954937	-0.16841228
F99	EX	0	0.330858171	-0.16144283	-0.02005114	-0.06152668	-0.03832106	-0.47411251
F99	EX	1.5	0.330858171	-0.16144283	-0.02005114	-0.06152668	-0.00824435	-0.23194826
F99	EX	3	0.330858171	-0.16144283	-0.02005114	-0.06152668	0.021832358	0.010216043

F106	COMB1	0	11.58466434	-15.6100578	0.037194408	0.068104789	0.092180938	-10.9111853
F106	COMB1	1.25	11.58466434	-6.97007465	0.037194408	0.068104789	0.045687921	3.201398849
F106	COMB1	2.5	11.58466434	1.669908643	0.037194408	0.068104789	-0.00080509	6.5140028
F106	COMB1	3.75	11.58466434	10.3098917	0.037194408	0.068104789	-0.0472981	-0.97337288
F106	COMB1	5	11.58466434	18.94987488	0.037194408	0.068104789	-0.09379112	-19.2607269
F106	COMB2	0	10.79934692	3.574835539	0.036366682	0.018314719	0.098039679	29.99452972
F106	COMB2	1.25	10.79934692	11.13482094	0.036366682	0.018314719	0.052581325	20.80099297
F106	COMB2	2.5	10.79934692	18.69480705	0.036366682	0.018314719	0.007122975	2.157473087
F106	COMB2	3.75	10.79934692	26.25479126	0.036366682	0.018314719	-0.03833538	-25.9360256
F106	COMB2	5	10.79934692	33.81477737	0.036366682	0.018314719	-0.08379373	-63.4795074
F106	COMB3	0	8.074492455	-9.04862881	0.006976618	-0.06348836	0.041002266	1.264206886
F106	COMB3	1.25	8.074492455	-1.48864317	0.006976618	-0.06348836	0.032281492	7.850001812
F106	COMB3	2.5	8.074492455	6.071341991	0.006976618	-0.06348836	0.023560723	4.985814571
F106	COMB3	3.75	8.074492455	13.63132763	0.006976618	-0.06348836	0.014839948	-7.32835436
F106	COMB3	5	8.074492455	21.19131279	0.006976618	-0.06348836	0.006119179	-29.0925045
F107	D	0	-2.55314994	-47.1201706	0.009957009	0.035499878	0.036096431	-47.041893
F107	D	1.5	-2.55314994	-23.4802246	0.009957009	0.035499878	0.02116094	5.908321857
F107	D	3	-2.55314994	0.159721792	0.009957009	0.035499878	0.00622545	23.3986721
F107	D	4.5	-2.55314994	23.79966927	0.009957009	0.035499878	-0.00871004	5.429157257
F107	D	6	-2.55314994	47.43961334	0.009957009	0.035499878	-0.02364553	-48.0002213
F107	L	0	1.124291778	-0.02842107	0.002248473	0.00124038	0.006835752	0.000603401
F107	L	1.5	1.124291778	-0.02842107	0.002248473	0.00124038	0.003463048	0.043234941
F107	L	3	1.124291778	-0.02842107	0.002248473	0.00124038	9.03447E-05	0.085866474
F107	L	4.5	1.124291778	-0.02842107	0.002248473	0.00124038	-0.00328236	0.128498003
F107	L	6	1.124291778	-0.02842107	0.002248473	0.00124038	-0.00665506	0.171129555
F107	EX	0	-0.09914839	0.185219035	0.001918117	-0.02096557	0.006327687	0.554862201
F107	EX	1.5	-0.09914839	0.185219035	0.001918117	-0.02096557	0.003450516	0.277034074
F107	EX	3	-0.09914839	0.185219035	0.001918117	-0.02096557	0.000573345	-0.00079406
F107	EX	4.5	-0.09914839	0.185219035	0.001918117	-0.02096557	-0.00230383	-0.27862218
F107	EX	6	-0.09914839	0.185219035	0.001918117	-0.02096557	-0.005181	-0.55645031
F107	EY	0	0.897794545	9.95468235	-0.02027582	5.14709E-05	-0.06149061	30.17985153
F107	EY	1.5	0.897794545	9.95468235	-0.02027582	5.14709E-05	-0.03107693	15.24785328
F107	EY	3	0.897794545	9.95468235	-0.02027582	5.14709E-05	-0.00066325	0.315853149
F107	EY	4.5	0.897794545	9.95468235	-0.02027582	5.14709E-05	0.029750427	-14.6161461
F107	EY	6	0.897794545	9.95468235	-0.02027582	5.14709E-05	0.060164105	-29.5481453
F107	COMB1	0	-1.26491332	-56.5896797	0.015545967	0.044584461	0.054252919	-56.4493065
F107	COMB1	1.5	-1.26491332	-28.2217426	0.015545967	0.044584461	0.030934006	7.159162045
F107	COMB1	3	-1.26491332	0.146192446	0.015545967	0.044584461	0.007615092	28.2157917
F107	COMB1	4.5	-1.26491332	28.51412964	0.015545967	0.044584461	-0.01570382	6.720585346
F107	COMB1	6	-1.26491332	56.882061	0.015545967	0.044584461	-0.03902274	-57.326458
F107	COMB2	0	-2.14646888	-46.1577034	0.006761497	0.015982443	0.02723413	-39.3128624
F107	COMB2	1.5	-2.14646888	-21.335762	0.006761497	0.015982443	0.017091898	11.30716133
F107	COMB2	3	-2.14646888	3.486181974	0.006761497	0.015982443	0.00694967	24.69432449
F107	COMB2	4.5	-2.14646888	28.30812645	0.006761497	0.015982443	-0.00319256	0.848631859
F107	COMB2	6	-2.14646888	53.13006592	0.006761497	0.015982443	-0.01333479	-60.2299156
F107	COMB3	0	-1.41520309	-38.974369	-0.00952227	0.031115483	-0.0225174	-17.5301723
F107	COMB3	1.5	-1.41520309	-14.1524277	-0.00952227	0.031115483	-0.00823402	22.31486893
F107	COMB3	3	-1.41520309	10.66951561	-0.00952227	0.031115483	0.006049372	24.92704773
F107	COMB3	4.5	-1.41520309	35.49145889	-0.00952227	0.031115483	0.020332757	-9.69362736
F107	COMB3	6	-1.41520309	60.31340027	-0.00952227	0.031115483	0.034616146	-81.5471573
F108	D	0	3.942844152	-17.3162365	0.016246978	-0.00788658	0.047587577	-17.1983852
F108	D	1.5	3.942844152	-8.67626667	0.016246978	-0.00788658	0.023217149	2.295961857
F108	D	3	3.942844152	-0.03629796	0.016246978	-0.00788658	-0.00115328	8.830375671
F108	D	4.5	3.942844152	8.603672028	0.016246978	-0.00788658	-0.02552371	2.404855251
F108	D	6	3.942844152	17.2436409	0.016246978	-0.00788658	-0.04989414	-16.9805984
F108	L	0	2.237742901	-0.06366574	0.003614845	-0.00065367	0.010452654	-0.03094445
F108	L	1.5	2.237742901	-0.06366574	0.003614845	-0.00065367	0.005030396	0.064554013
F108	L	3	2.237742901	-0.06366574	0.003614845	-0.00065367	-0.00039186	0.160052463
F108	L	4.5	2.237742901	-0.06366574	0.003614845	-0.00065367	-0.00581412	0.255550921
F108	L	6	2.237742901	-0.06366574	0.003614845	-0.00065367	-0.01123638	0.351049364
F108	EX	0	0.028684085	0.169710666	0.000988246	-0.01084105	0.00641276	0.516545355
F108	EX	1.5	0.028684085	0.169710666	0.000988246	-0.01084105	0.004930393	0.261979759
F108	EX	3	0.028684085	0.169710666	0.000988246	-0.01084105	0.003448026	0.007414185
F108	EX	4.5	0.028684085	0.169710666	0.000988246	-0.01084105	0.001965659	-0.2471514
F108	EX	6	0.028684085	0.169710666	0.000988246	-0.01084105	0.000483291	-0.50171697
F108	EY	0	0.911901116	9.521512985	-0.05650452	9.37713E-05	-0.17144957	28.86759949
F108	EY	1.5	0.911901116	9.521512985	-0.05650452	9.37713E-05	-0.08669292	14.58535194
F108	EY	3	0.911901116	9.521512985	-0.05650452	9.37713E-05	-0.00193628	0.303104728
F108	EY	4.5	0.911901116	9.521512985	-0.05650452	9.37713E-05	0.082820371	-13.9791422
F108	EY	6	0.911901116	9.521512985	-0.05650452	9.37713E-05	0.167577013	-28.2613888
F108	COMB1	0	8.31180191	-20.8813496	0.025280125	-0.01050977	0.073829338	-20.6875725
F108	COMB1	1.5	8.31180191	-10.5133858	0.025280125	-0.01050977	0.035909213	2.858440638
F108	COMB1	3	8.31180191	-0.14542273	0.025280125	-0.01050977	-0.00201092	10.85253429
F108	COMB1	4.5	8.31180191	10.22254086	0.025280125	-0.01050977	-0.03993105	3.294707775
F108	COMB1	6	8.31180191	20.59050369	0.025280125	-0.01050977	-0.07785118	-19.8150387
F108	COMB2	0	5.161812305	-15.0271759	0.001421915	-0.01967777	0.005890136	-8.44013405
F108	COMB2	1.5	5.161812305	-5.9552083	0.001421915	-0.01967777	0.003757267	7.296629429
F108	COMB2	3	5.161812305	3.116759539	0.001421915	-0.01967777	0.001624396	9.425462723
F108	COMB2	4.5	5.161812305	12.18872738	0.001421915	-0.01967777	-0.00050847	-2.05363488
F108	COMB2	6	5.161812305	21.2606945	0.001421915	-0.01967777	-0.00264134	-27.1406612
F108	COMB3	0	5.811407089	-8.15105534	-0.04082045	-0.01180329	-0.12474249	12.40563869
F108	COMB3	1.5	5.811407089	0.920912147	-0.04082045	-0.01180329	-0.06351192	17.82823753
F108	COMB3	3	5.811407089	9.992879868	-0.04082045	-0.01180329	-0.00228135	9.642906189
F108	COMB3	4.5	5.811407089	19.06484795	-0.04082045	-0.01180329	0.058949225	-12.1503553

F108	COMB3	6	5.811407089	28.13681412	-0.04082045	-0.01180329	0.120179802	-47.551548
F109	D	0	3.708374023	-17.2536049	0.002481825	0.002757102	0.008937711	-16.963829
F109	D	1.5	3.708374023	-8.61363506	0.002481825	0.002757102	0.005214979	2.436570644
F109	D	3	3.708374023	0.026334707	0.002481825	0.002757102	0.001492249	8.877036095
F109	D	4.5	3.708374023	8.666303635	0.002481825	0.002757102	-0.00223048	2.357566833
F109	D	6	3.708374023	17.30627441	0.002481825	0.002757102	-0.00595321	-17.1218357
F109	L	0	2.010783672	-0.04187233	0.001133926	2.27108E-05	0.00366789	0.047955919
F109	L	1.5	2.010783672	-0.04187233	0.001133926	2.27108E-05	0.001967004	0.110764317
F109	L	3	2.010783672	-0.04187233	0.001133926	2.27108E-05	0.000266117	0.173572734
F109	L	4.5	2.010783672	-0.04187233	0.001133926	2.27108E-05	-0.00143477	0.236381114
F109	L	6	2.010783672	-0.04187233	0.001133926	2.27108E-05	-0.00313565	0.299189538
F109	EX	0	-0.18267694	0.156949997	-0.01589335	-0.01244759	-0.04562346	0.477286786
F109	EX	1.5	-0.18267694	0.156949997	-0.01589335	-0.01244759	-0.02178348	0.241862178
F109	EX	3	-0.18267694	0.156949997	-0.01589335	-0.01244759	0.0020565	0.006437582
F109	EX	4.5	-0.18267694	0.156949997	-0.01589335	-0.01244759	0.025896482	-0.22898702
F109	EX	6	-0.18267694	0.156949997	-0.01589335	-0.01244759	0.049736466	-0.46441168
F109	EY	0	1.994474769	8.782294273	-0.03911639	3.41106E-05	-0.11932206	26.62892723
F109	EY	1.5	1.994474769	8.782294273	-0.03911639	3.41106E-05	-0.06064758	13.45550823
F109	EY	3	1.994474769	8.782294273	-0.03911639	3.41106E-05	-0.0019731	0.28208828
F109	EY	4.5	1.994474769	8.782294273	-0.03911639	3.41106E-05	0.056701388	-12.8913317
F109	EY	6	1.994474769	8.782294273	-0.03911639	3.41106E-05	0.115375869	-26.0647526
F109	COMB1	0	7.667302608	-20.7713203	0.004792471	0.003344859	0.016593877	-20.2798634
F109	COMB1	1.5	7.667302608	-10.4033575	0.004792471	0.003344859	0.009405182	3.101107836
F109	COMB1	3	7.667302608	-0.03539408	0.004792471	0.003344859	0.002216486	10.93015957
F109	COMB1	4.5	7.667302608	10.33256912	0.004792471	0.003344859	-0.00497221	3.207289934
F109	COMB1	6	7.667302608	20.70053291	0.004792471	0.003344859	-0.0121609	-20.0674992
F109	COMB2	0	4.966378212	-15.2006083	-0.02580817	-0.0099704	-0.07426675	-8.91480923
F109	COMB2	1.5	4.966378212	-6.12864065	-0.02580817	-0.0099704	-0.03555455	7.082102299
F109	COMB2	3	4.966378212	2.943327427	-0.02580817	-0.0099704	0.003157641	9.471083641
F109	COMB2	4.5	4.966378212	12.01529503	-0.02580817	-0.0099704	0.041869838	-1.74786603
F109	COMB2	6	4.966378212	21.08726311	-0.02580817	-0.0099704	0.080582038	-26.5747452
F109	COMB3	0	6.563844681	-8.85862637	-0.04311551	-0.00098306	-0.12911958	10.31380653
F109	COMB3	1.5	6.563844681	0.213341489	-0.04311551	-0.00098306	-0.06444642	16.79776001
F109	COMB3	3	6.563844681	9.285309792	-0.04311551	-0.00098306	0.000226735	9.673783302
F109	COMB3	4.5	6.563844681	18.35727692	-0.04311551	-0.00098306	0.064899892	-11.0581245
F109	COMB3	6	6.563844681	27.429245	-0.04311551	-0.00098306	0.129573047	-45.3979607
F110	D	0	3.706313372	-17.2543964	-0.00277968	-0.00348732	-0.00981088	-16.9660721
F110	D	1.5	3.706313372	-8.61442661	-0.00277968	-0.00348732	-0.00564137	2.435513496
F110	D	3	3.706313372	0.025542794	-0.00277968	-0.00348732	-0.00147185	8.877165794
F110	D	4.5	3.706313372	8.665512085	-0.00277968	-0.00348732	0.002697666	2.358885288
F110	D	6	3.706313372	17.30548096	-0.00277968	-0.00348732	0.006867182	-17.1193295
F110	L	0	2.056300402	-0.04505157	3.82795E-05	-0.00061494	-0.00059302	0.043597139
F110	L	1.5	2.056300402	-0.04505157	3.82795E-05	-0.00061494	-0.00065044	0.111174375
F110	L	3	2.056300402	-0.04505157	3.82795E-05	-0.00061494	-0.00070786	0.178751618
F110	L	4.5	2.056300402	-0.04505157	3.82795E-05	-0.00061494	-0.00076528	0.246328861
F110	L	6	2.056300402	-0.04505157	3.82795E-05	-0.00061494	-0.0008227	0.313906103
F110	EX	0	0.178156391	-0.15916054	-0.01593802	-0.01246238	-0.04542533	-0.483872
F110	EX	1.5	0.178156391	-0.15916054	-0.01593802	-0.01246238	-0.02151834	-0.24513155
F110	EX	3	0.178156391	-0.15916054	-0.01593802	-0.01246238	0.002388656	-0.00639114
F110	EX	4.5	0.178156391	-0.15916054	-0.01593802	-0.01246238	0.026295651	0.232349277
F110	EX	6	0.178156391	-0.15916054	-0.01593802	-0.01246238	0.050202645	0.471089721
F110	EY	0	1.991846085	8.782429695	0.039132833	-3.4257E-05	0.119373851	26.62935638
F110	EY	1.5	1.991846085	8.782429695	0.039132833	-3.4257E-05	0.06067469	13.4557333
F110	EY	3	1.991846085	8.782429695	0.039132833	-3.4257E-05	0.001975536	0.282109112
F110	EY	4.5	1.991846085	8.782429695	0.039132833	-3.4257E-05	-0.05672362	-12.8915148
F110	EY	6	1.991846085	8.782429695	0.039132833	-3.4257E-05	-0.11542278	-26.0651379
F110	COMB1	0	7.737656593	-20.7773571	-0.00327437	-0.00516869	-0.01272189	-20.2895317
F110	COMB1	1.5	7.737656593	-10.4093943	-0.00327437	-0.00516869	-0.00781034	3.1004951
F110	COMB1	3	7.737656593	-0.04143116	-0.00327437	-0.00516869	-0.0028988	10.93860245
F110	COMB1	4.5	7.737656593	10.32653236	-0.00327437	-0.00516869	0.002012753	3.224788427
F110	COMB1	6	7.737656593	20.69449425	-0.00327437	-0.00516869	0.006924301	-20.0409451
F110	COMB2	0	5.351187229	-15.5295734	-0.00707562	-0.01676474	-0.01990068	-9.91320419
F110	COMB2	1.5	5.351187229	-6.45760489	-0.00707562	-0.01676474	-0.00928728	6.577153683
F110	COMB2	3	5.351187229	2.614362955	-0.00707562	-0.01676474	0.001326134	9.459580421
F110	COMB2	4.5	5.351187229	11.6863308	-0.00707562	-0.01676474	0.011939544	-1.26592255
F110	COMB2	6	5.351187229	20.75829887	-0.00707562	-0.01676474	0.022552952	-25.5993557
F110	COMB3	0	6.68692112	-8.95989132	0.033162389	-0.00781701	0.100545339	10.00776005
F110	COMB3	1.5	6.68692112	0.112076469	0.033162389	-0.00781701	0.050801825	16.64361191
F110	COMB3	3	6.68692112	9.184043884	0.033162389	-0.00781701	0.001058321	9.671532631
F110	COMB3	4.5	6.68692112	18.25601196	0.033162389	-0.00781701	-0.04868519	-10.9084778
F110	COMB3	6	6.68692112	27.32798004	0.033162389	-0.00781701	-0.0984287	-45.0964165
F111	D	0	4.009580135	-17.3209648	-0.01438873	0.007441096	-0.04266581	-17.2045193
F111	D	1.5	4.009580135	-8.68099594	-0.01438873	0.007441096	-0.02108274	2.296921968
F111	D	3	4.009580135	-0.04102677	-0.01438873	0.007441096	0.000500317	8.838429451
F111	D	4.5	4.009580135	8.598942757	-0.01438873	0.007441096	0.022083377	2.420002222
F111	D	6	4.009580135	17.23891258	-0.01438873	0.007441096	0.043666437	-16.9583569
F111	L	0	2.975883484	-0.09381133	-0.00167851	0.000119707	-0.00531714	-0.06556621
F111	L	1.5	2.975883484	-0.09381133	-0.00167851	0.000119707	-0.00279938	0.075150557
F111	L	3	2.975883484	-0.09381133	-0.00167851	0.000119707	-0.00028161	0.215867326
F111	L	4.5	2.975883484	-0.09381133	-0.00167851	0.000119707	0.002236147	0.356584102
F111	L	6	2.975883484	-0.09381133	-0.00167851	0.000119707	0.00475391	0.497300863
F111	EX	0	-0.04323433	-0.17002454	0.001490043	-0.01087341	0.007768308	-0.5172236
F111	EX	1.5	-0.04323433	-0.17002454	0.001490043	-0.01087341	0.005533247	-0.26218718
F111	EX	3	-0.04323433	-0.17002454	0.001490043	-0.01087341	0.003298186	-0.00715076

F111	EX	4.5	-0.04323433	-0.17002454	0.001490043	-0.01087341	0.001063124	0.247885659
F111	EX	6	-0.04323433	-0.17002454	0.001490043	-0.01087341	-0.00117194	0.502922118
F111	EY	0	0.911795318	9.521541595	0.056488562	-9.3887E-05	0.171399027	28.86768532
F111	EY	1.5	0.911795318	9.521541595	0.056488562	-9.3887E-05	0.086666323	14.58539677
F111	EY	3	0.911795318	9.521541595	0.056488562	-9.3887E-05	0.001933614	0.303107232
F111	EY	4.5	0.911795318	9.521541595	0.056488562	-9.3887E-05	-0.08279909	-13.9791813
F111	EY	6	0.911795318	9.521541595	0.056488562	-9.3887E-05	-0.1675318	-28.2614708
F111	COMB1	0	9.572909355	-20.935257	-0.01995209	0.009120846	-0.05970639	-20.7503281
F111	COMB1	1.5	9.572909355	-10.5672932	-0.01995209	0.009120846	-0.0297783	2.876547337
F111	COMB1	3	9.572909355	-0.19933024	-0.01995209	0.009120846	0.000149796	10.9515028
F111	COMB1	4.5	9.572909355	10.16863346	-0.01995209	0.009120846	0.03007789	3.474537373
F111	COMB1	6	9.572909355	20.5365963	-0.01995209	0.009120846	0.060005981	-19.554348
F111	COMB2	0	5.389930248	-15.3932543	0.003699195	-0.00343269	0.015556901	-9.52740383
F111	COMB2	1.5	5.389930248	-6.3212862	0.003699195	-0.00343269	0.010008118	6.758476734
F111	COMB2	3	5.389930248	2.7506814	0.003699195	-0.00343269	0.004459334	9.436427116
F111	COMB2	4.5	5.389930248	11.822649	0.003699195	-0.00343269	-0.00108945	-1.49355423
F111	COMB2	6	5.389930248	20.89461708	0.003699195	-0.00343269	-0.00663823	-26.0314655
F111	COMB3	0	6.091228485	-8.2725029	0.044145457	0.004327154	0.135942012	12.06274509
F111	COMB3	1.5	6.091228485	0.799464345	0.044145457	0.004327154	0.069723926	17.66751862
F111	COMB3	3	6.091228485	9.871432304	0.044145457	0.004327154	0.003505847	9.664359093
F111	COMB3	4.5	6.091228485	18.94339943	0.044145457	0.004327154	-0.06271223	-11.9467306
F111	COMB3	6	6.091228485	28.01536751	0.044145457	0.004327154	-0.12893032	-47.1657486
F112	D	0	-1.4930011	-47.1631699	-0.00773518	-0.03656278	-0.02997364	-47.0929184
F112	D	1.5	-1.4930011	-23.523222	-0.00773518	-0.03656278	-0.01837088	5.921792984
F112	D	3	-1.4930011	0.11672347	-0.00773518	-0.03656278	-0.00676812	23.47663879
F112	D	4.5	-1.4930011	23.75667	-0.00773518	-0.03656278	0.004834633	5.571623325
F112	D	6	-1.4930011	47.39661789	-0.00773518	-0.03656278	0.016437391	-47.7932587
F112	L	0	2.285695076	-0.07544477	-0.00143875	-0.00240723	-0.00463191	-0.05290226
F112	L	1.5	2.285695076	-0.07544477	-0.00143875	-0.00240723	-0.00247379	0.06026471
F112	L	3	2.285695076	-0.07544477	-0.00143875	-0.00240723	-0.00031567	0.17343168
F112	L	4.5	2.285695076	-0.07544477	-0.00143875	-0.00240723	0.001842455	0.286598653
F112	L	6	2.285695076	-0.07544477	-0.00143875	-0.00240723	0.004000576	0.399765611
F112	EX	0	0.118486337	-0.18147032	0.000545039	-0.02097315	0.005048388	-0.54389149
F112	EX	1.5	0.118486337	-0.18147032	0.000545039	-0.02097315	0.00423083	-0.27168652
F112	EX	3	0.118486337	-0.18147032	0.000545039	-0.02097315	0.003413273	0.000518537
F112	EX	4.5	0.118486337	-0.18147032	0.000545039	-0.02097315	0.002595716	0.272723585
F112	EX	6	0.118486337	-0.18147032	0.000545039	-0.02097315	0.001778158	0.54492861
F112	EY	0	0.897807717	9.954688072	0.020275544	-5.1683E-05	0.061490081	30.17987251
F112	EY	1.5	0.897807717	9.954688072	0.020275544	-5.1683E-05	0.031076811	15.24786186
F112	EY	3	0.897807717	9.954688072	0.020275544	-5.1683E-05	0.000663543	0.315853417
F112	EY	4.5	0.897807717	9.954688072	0.020275544	-5.1683E-05	-0.02974973	-14.6161547
F112	EY	6	0.897807717	9.954688072	0.020275544	-5.1683E-05	-0.060163	-29.5481625
F112	COMB1	0	1.865510821	-56.7165146	-0.01158422	-0.04772691	-0.04337943	-56.5961456
F112	COMB1	1.5	1.865510821	-28.3485794	-0.01158422	-0.04772691	-0.02600312	7.202575207
F112	COMB1	3	1.865510821	0.019356539	-0.01158422	-0.04772691	-0.00862682	28.44945908
F112	COMB1	4.5	1.865510821	28.38729286	-0.01158422	-0.04772691	0.008749487	7.144505978
F112	COMB1	6	1.865510821	56.75522995	-0.01158422	-0.04772691	0.026125791	-56.7122879
F112	COMB2	0	-0.44221446	-46.597187	-0.00162424	-0.06087269	-0.00833692	-40.5204964
F112	COMB2	1.5	-0.44221446	-21.7752438	-0.00162424	-0.06087269	-0.00590057	10.7587471
F112	COMB2	3	-0.44221446	3.046699524	-0.00162424	-0.06087269	-0.00346421	24.80513382
F112	COMB2	4.5	-0.44221446	27.86864471	-0.00162424	-0.06087269	-0.00102786	1.618663311
F112	COMB2	6	-0.44221446	52.6905899	-0.00162424	-0.06087269	0.001408492	-58.8006668
F112	COMB3	0	0.13236405	-39.1498337	0.012885859	-0.04581001	0.033223454	-17.9466877
F112	COMB3	1.5	0.13236405	-14.3278904	0.012885859	-0.04581001	0.013894693	22.16154099
F112	COMB3	3	0.13236405	10.49405384	0.012885859	-0.04581001	-0.00543407	25.03691292
F112	COMB3	4.5	0.13236405	35.31599808	0.012885859	-0.04581001	-0.02476282	-9.3205719
F112	COMB3	6	0.13236405	60.13794327	0.012885859	-0.04581001	-0.04409158	-80.9109116
F113	D	0	5.269321918	-14.774334	-0.08597808	0.151335776	-0.22394209	-12.6932058
F113	D	1.25	5.269321918	-7.57434797	-0.08597808	0.151335776	-0.11646949	1.274719834
F113	D	2.5	5.269321918	-0.37436157	-0.08597808	0.151335776	-0.0089969	6.242663383
F113	D	3.75	5.269321918	6.825624466	-0.08597808	0.151335776	0.098475702	2.210623741
F113	D	5	5.269321918	14.02560997	-0.08597808	0.151335776	0.205948293	-10.8213987
F113	L	0	2.983469009	-0.83114189	-0.01271478	0.024661601	-0.03295682	-2.5787611
F113	L	1.25	2.983469009	-0.83114189	-0.01271478	0.024661601	-0.01706335	-1.53983366
F113	L	2.5	2.983469009	-0.83114189	-0.01271478	0.024661601	-0.00116987	-0.50090623
F113	L	3.75	2.983469009	-0.83114189	-0.01271478	0.024661601	0.0147236	0.538021207
F113	L	5	2.983469009	-0.83114189	-0.01271478	0.024661601	0.030617073	1.576948643
F113	EX	0	-6.18653679	17.71084976	0.008184989	0.0057733	0.022847515	48.31274796
F113	EX	1.25	-6.18653679	17.71084976	0.008184989	0.0057733	0.012616278	26.1741848
F113	EX	2.5	-6.18653679	17.71084976	0.008184989	0.0057733	0.002385042	4.03562355
F113	EX	3.75	-6.18653679	17.71084976	0.008184989	0.0057733	-0.00784619	-18.1029396
F113	EX	5	-6.18653679	17.71084976	0.008184989	0.0057733	-0.01807743	-40.2415009
F113	EY	0	0.002173709	-0.00101365	0.028535921	0.104235694	0.092618413	-0.00273711
F113	EY	1.25	0.002173709	-0.00101365	0.028535921	0.104235694	0.056948517	-0.00147004
F113	EY	2.5	0.002173709	-0.00101365	0.028535921	0.104235694	0.021278609	-0.00020298
F113	EY	3.75	0.002173709	-0.00101365	0.028535921	0.104235694	-0.01439129	0.001064087
F113	EY	5	0.002173709	-0.00101365	0.028535921	0.104235694	-0.0500612	0.002331153
F113	COMB1	0	11.09673691	-19.0590267	-0.12351733	0.221061498	-0.32146141	-19.3578644
F113	COMB1	1.25	11.09673691	-10.4190445	-0.12351733	0.221061498	-0.16706476	-0.93407017
F113	COMB1	2.5	11.09673691	-1.77906096	-0.12351733	0.221061498	-0.01266807	6.689745903
F113	COMB1	3.75	11.09673691	6.860922337	-0.12351733	0.221061498	0.14172861	3.513582468
F113	COMB1	5	11.09673691	15.50090504	-0.12351733	0.221061498	0.296125263	-10.4625607
F113	COMB2	0	0.07019984	2.555549145	-0.07682186	0.205480576	-0.19269861	35.86265564
F113	COMB2	1.25	0.07019984	10.11553478	-0.07682186	0.205480576	-0.0966713	27.94322777

F113	COMB2	2.5	0.07019984	17.67551994	-0.07682186	0.205480576	-0.00064397	10.57381725
F113	COMB2	3.75	0.07019984	25.23550606	-0.07682186	0.205480576	0.095383354	-16.245575
F113	COMB2	5	0.07019984	32.79549026	-0.07682186	0.205480576	0.191410676	-52.5149498
F113	COMB3	0	4.526103973	-10.1970072	-0.06174115	0.277937025	-0.1410743	1.075465798
F113	COMB3	1.25	4.526103973	-2.63702178	-0.06174115	0.277937025	-0.06389786	9.096733093
F113	COMB3	2.5	4.526103973	4.922963619	-0.06174115	0.277937025	0.013278577	7.668019295
F113	COMB3	3.75	4.526103973	12.48294926	-0.06174115	0.277937025	0.090455011	-3.21067691
F113	COMB3	5	4.526103973	20.04293442	-0.06174115	0.277937025	0.167631447	-23.5393543
F114	D	0	3.236927986	-13.9810772	-0.00637436	-0.00313916	-0.00643585	-10.7180939
F114	D	1.25	3.236927986	-6.78109169	-0.00637436	-0.00313916	0.001532097	2.258262396
F114	D	2.5	3.236927986	0.41889441	-0.00637436	-0.00313916	0.009500043	6.23463583
F114	D	3.75	3.236927986	7.618880272	-0.00637436	-0.00313916	0.017467987	1.211026192
F114	D	5	3.236927986	14.81886673	-0.00637436	-0.00313916	0.025435932	-12.8125658
F114	L	0	1.786854863	0.205775067	-0.00236913	-0.00172494	-0.0040405	0.744864464
F114	L	1.25	1.786854863	0.205775067	-0.00236913	-0.00172494	-0.00107909	0.487645686
F114	L	2.5	1.786854863	0.205775067	-0.00236913	-0.00172494	0.001882325	0.230426863
F114	L	3.75	1.786854863	0.205775067	-0.00236913	-0.00172494	0.004843738	-0.02679197
F114	L	5	1.786854863	0.205775067	-0.00236913	-0.00172494	0.007805152	-0.2840108
F114	EX	0	-3.06803703	14.06844139	-0.00349086	0.00273182	0.00073585	34.7677536
F114	EX	1.25	-3.06803703	14.06844139	-0.00349086	0.00273182	0.005099432	17.18220139
F114	EX	2.5	-3.06803703	14.06844139	-0.00349086	0.00273182	0.009463013	-0.40335098
F114	EX	3.75	-3.06803703	14.06844139	-0.00349086	0.00273182	0.013826594	-17.988903
F114	EX	5	-3.06803703	14.06844139	-0.00349086	0.00273182	0.018190175	-35.5744553
F114	EY	0	0.0111076	-0.00179711	0.082466312	0.178168342	0.19559595	-0.0043227
F114	EY	1.25	0.0111076	-0.00179711	0.082466312	0.178168342	0.092513055	-0.00207631
F114	EY	2.5	0.0111076	-0.00179711	0.082466312	0.178168342	-0.01056984	0.000170072
F114	EY	3.75	0.0111076	-0.00179711	0.082466312	0.178168342	-0.11365273	0.002416458
F114	EY	5	0.0111076	-0.00179711	0.082466312	0.178168342	-0.21673562	0.004662844
F114	COMB1	0	6.743281364	-16.4480534	-0.01143984	-0.00652689	-0.01418782	-11.6699295
F114	COMB1	1.25	6.743281364	-7.80807018	-0.01143984	-0.00652689	0.000111974	3.490148067
F114	COMB1	2.5	6.743281364	0.831913412	-0.01143984	-0.00652689	0.014411771	7.850245953
F114	COMB1	3.75	6.743281364	9.471896172	-0.01143984	-0.00652689	0.028711567	1.41036427
F114	COMB1	5	6.743281364	18.11188126	-0.01143984	-0.00652689	0.043011364	-15.8294964
F114	COMB2	0	0.789714038	-0.05504136	0.014924493	0.055110987	0.054343928	24.96389771
F114	COMB2	1.25	0.789714038	7.504943371	0.014924493	0.055110987	0.035688315	20.30770874
F114	COMB2	2.5	0.789714038	15.06492901	0.014924493	0.055110987	0.017032698	6.201537132
F114	COMB2	3.75	0.789714038	22.62491417	0.014924493	0.055110987	-0.00162292	-17.3546162
F114	COMB2	5	0.789714038	30.18490028	0.014924493	0.055110987	-0.02027854	-50.3607521
F114	COMB3	0	3.006864786	-10.1856403	0.078050651	0.184097812	0.197577134	-0.07206247
F114	COMB3	1.25	3.006864786	-2.62565517	0.078050651	0.184097812	0.100013815	7.934997559
F114	COMB3	2.5	3.006864786	4.934330463	0.078050651	0.184097812	0.0024505	6.492074966
F114	COMB3	3.75	3.006864786	12.49431515	0.078050651	0.184097812	-0.09511283	-4.40082932
F114	COMB3	5	3.006864786	20.05430222	0.078050651	0.184097812	-0.19267614	-24.7437153
F115	D	0	3.470706701	-14.3634729	0.000277614	0.000234106	0.001599506	-12.1764593
F115	D	1.25	3.470706701	-7.16348648	0.000277614	0.000234106	0.001252489	1.27789104
F115	D	2.5	3.470706701	0.036499444	0.000277614	0.000234106	0.000905471	5.73225832
F115	D	3.75	3.470706701	7.236485481	0.000277614	0.000234106	0.000558453	1.186642408
F115	D	5	3.470706701	14.43647194	0.000277614	0.000234106	0.000211436	-12.3589563
F115	L	0	1.862652183	0.07187967	0.000758443	0.001881091	0.001942465	0.030999945
F115	L	1.25	1.862652183	0.07187967	0.000758443	0.001881091	0.000994412	-0.05884965
F115	L	2.5	1.862652183	0.07187967	0.000758443	0.001881091	4.6359E-05	-0.14869925
F115	L	3.75	1.862652183	0.07187967	0.000758443	0.001881091	-0.00090169	-0.23854885
F115	L	5	1.862652183	0.07187967	0.000758443	0.001881091	-0.00184975	-0.32839844
F115	EX	0	-1.1809144	14.42250443	0.045594651	0.075620018	0.114222206	36.08076859
F115	EX	1.25	-1.1809144	14.42250443	0.045594651	0.075620018	0.057728897	18.05263519
F115	EX	2.5	-1.1809144	14.42250443	0.045594651	0.075620018	0.000235578	0.024504196
F115	EX	3.75	-1.1809144	14.42250443	0.045594651	0.075620018	-0.05675774	-18.0036259
F115	EX	5	-1.1809144	14.42250443	0.045594651	0.075620018	-0.11375105	-36.0317574
F115	EY	0	0.019673916	-2.8966E-07	-5.0451E-05	-2.8616E-05	-0.0453013	0.000373012
F115	EY	1.25	0.019673916	-2.8966E-07	-5.0451E-05	-2.8616E-05	-0.04523824	0.000373374
F115	EY	2.5	0.019673916	-2.8966E-07	-5.0451E-05	-2.8616E-05	-0.04517517	0.000373736
F115	EY	3.75	0.019673916	-2.8966E-07	-5.0451E-05	-2.8616E-05	-0.04511211	0.000374098
F115	EY	5	0.019673916	-2.8966E-07	-5.0451E-05	-2.8616E-05	-0.04504905	0.00037446
F115	COMB1	0	7.145091534	-17.1211605	0.001546645	0.003290673	0.005027352	-14.562151
F115	COMB1	1.25	7.145091534	-8.48117638	0.001546645	0.003290673	0.003094046	1.439309716
F115	COMB1	2.5	7.145091534	0.158806816	0.001546645	0.003290673	0.00116074	6.640790939
F115	COMB1	3.75	7.145091534	8.798789978	0.001546645	0.003290673	-0.00077257	1.042292714
F115	COMB1	5	7.145091534	17.43877411	0.001546645	0.003290673	-0.00270587	-15.356185
F115	COMB2	0	3.014928341	-0.13171226	0.047704976	0.079096064	0.106241435	24.56819534
F115	COMB2	1.25	3.014928341	7.428273201	0.047704976	0.079096064	0.046610214	20.00784302
F115	COMB2	2.5	3.014928341	14.98825836	0.047704976	0.079096064	-0.01302101	5.997510433
F115	COMB2	3.75	3.014928341	22.54824448	0.047704976	0.079096064	-0.07265223	-17.4628029
F115	COMB2	5	3.014928341	30.10822868	0.047704976	0.079096064	-0.13228345	-50.3731003
F115	COMB3	0	3.879647017	-10.5159159	0.014839745	0.024628615	-0.00929501	-1.40968382
F115	COMB3	1.25	3.879647017	-2.95593023	0.014839745	0.024628615	-0.0278447	7.010220051
F115	COMB3	2.5	3.879647017	4.604054928	0.014839745	0.024628615	-0.04639438	5.980142117
F115	COMB3	3.75	3.879647017	12.16404057	0.014839745	0.024628615	-0.06494406	-4.49991798
F115	COMB3	5	3.879647017	19.72402573	0.014839745	0.024628615	-0.08349375	-24.4299603
F116	D	0	3.300093412	-14.6896353	0.007479324	0.005826866	0.026479574	-12.5631323
F116	D	1.25	3.300093412	-7.4896493	0.007479324	0.005826866	0.01713042	1.298921585
F116	D	2.5	3.300093412	-0.28966329	0.007479324	0.005826866	0.007781264	6.160992146
F116	D	3.75	3.300093412	6.910322666	0.007479324	0.005826866	-0.00156789	2.023079872
F116	D	5	3.300093412	14.1103096	0.007479324	0.005826866	-0.01091705	-11.1148157
F116	L	0	1.799018264	-0.3265413	-0.00387269	0.01940351	-0.00840503	-0.61602718

F118	COMB1	0	-1.45770192	-59.1609917	0.110905945	1.068652511	0.294400424	-59.7767792
F118	COMB1	1.5	-1.45770192	-30.7929478	0.110905945	1.068652511	0.128041133	7.688826084
F118	COMB1	3	-1.45770192	-2.42490339	0.110905945	1.068652511	-0.03831815	32.60226822
F118	COMB1	4.5	-1.45770192	25.94314003	0.110905945	1.068652511	-0.20467745	14.96355247
F118	COMB1	6	-1.45770192	54.31118393	0.110905945	1.068652511	-0.37103674	-45.2273254
F118	COMB2	0	-2.45310926	-48.0877953	0.05882315	0.898123145	0.167725503	-41.8437195
F118	COMB2	1.5	-2.45310926	-23.2657566	0.05882315	0.898123145	0.07949058	11.67156696
F118	COMB2	3	-2.45310926	1.556281924	0.05882315	0.898123145	-0.00874433	27.95370865
F118	COMB2	4.5	-2.45310926	26.37832069	0.05882315	0.898123145	-0.09697925	7.002709866
F118	COMB2	6	-2.45310926	51.20035934	0.05882315	0.898123145	-0.18521418	-51.1814308
F118	COMB3	0	0.175181359	-39.2321548	0.052232623	0.916780174	0.142074555	-17.3916931
F118	COMB3	1.5	0.175181359	-14.4101152	0.052232623	0.916780174	0.063725449	22.84009933
F118	COMB3	3	0.175181359	10.41192341	0.052232623	0.916780174	-0.01462366	25.83874893
F118	COMB3	4.5	0.175181359	35.23396301	0.052232623	0.916780174	-0.09297276	-8.39574242
F118	COMB3	6	0.175181359	60.05599976	0.052232623	0.916780174	-0.17132188	-79.8633728
F119	D	0	6.998780727	-16.916296	0.057587441	-0.09448863	0.15693973	-15.9517431
F119	D	1.5	6.998780727	-8.27629471	0.057587441	-0.09448863	0.070558384	2.942741871
F119	D	3	6.998780727	0.363707781	0.057587441	-0.09448863	-0.01582297	8.877195358
F119	D	4.5	6.998780727	9.003709793	0.057587441	-0.09448863	-0.10220432	1.851616025
F119	D	6	6.998780727	17.643713	0.057587441	-0.09448863	-0.18858567	-18.1339951
F119	L	0	3.899118423	0.687398434	0.008227996	-0.01700748	0.021779817	1.431997299
F119	L	1.5	3.899118423	0.687398434	0.008227996	-0.01700748	0.009437797	0.400897443
F119	L	3	3.899118423	0.687398434	0.008227996	-0.01700748	-0.00290422	-0.63020247
F119	L	4.5	3.899118423	0.687398434	0.008227996	-0.01700748	-0.01524625	-1.66130233
F119	L	6	3.899118423	0.687398434	0.008227996	-0.01700748	-0.02758827	-2.69240212
F119	EX	0	0.103368253	0.218511268	-0.0044974	-0.01186373	-0.01464866	0.597743094
F119	EX	1.5	0.103368253	0.218511268	-0.0044974	-0.01186373	-0.00790255	0.269975424
F119	EX	3	0.103368253	0.218511268	-0.0044974	-0.01186373	-0.00115644	-0.05779222
F119	EX	4.5	0.103368253	0.218511268	-0.0044974	-0.01186373	0.005589676	-0.38555986
F119	EX	6	0.103368253	0.218511268	-0.0044974	-0.01186373	0.012335789	-0.71332753
F119	EY	0	3.326747656	11.71033573	-0.06878417	-0.00090507	-0.19127235	32.35411072
F119	EY	1.5	3.326747656	11.71033573	-0.06878417	-0.00090507	-0.08809587	14.7885685
F119	EY	3	3.326747656	11.71033573	-0.06878417	-0.00090507	0.015080607	-2.77697253
F119	EY	4.5	3.326747656	11.71033573	-0.06878417	-0.00090507	0.118257083	-20.342514
F119	EY	6	3.326747656	11.71033573	-0.06878417	-0.00090507	0.221433565	-37.9080544
F119	COMB1	0	14.63712597	-19.1997185	0.082269721	-0.14059833	0.223175392	-16.8508968
F119	COMB1	1.5	14.63712597	-8.83171558	0.082269721	-0.14059833	0.099770531	4.172726154
F119	COMB1	3	14.63712597	1.536286831	0.082269721	-0.14059833	-0.02363432	9.644310951
F119	COMB1	4.5	14.63712597	11.90428925	0.082269721	-0.14059833	-0.14703918	-0.43614438
F119	COMB1	6	14.63712597	22.27229309	0.082269721	-0.14059833	-0.27044404	-26.0686378
F119	COMB2	0	9.731853485	-13.6306658	0.036736812	-0.11713448	0.096235208	-5.48804283
F119	COMB2	1.5	9.731853485	-4.55866385	0.036736812	-0.11713448	0.041129868	8.153985023
F119	COMB2	3	9.731853485	4.513338566	0.036736812	-0.11713448	-0.01397547	8.187980652
F119	COMB2	4.5	9.731853485	13.5853405	0.036736812	-0.11713448	-0.06908081	-5.38605976
F119	COMB2	6	9.731853485	22.65734291	0.036736812	-0.11713448	-0.12418614	-32.5681343
F119	COMB3	0	12.1025877	-5.18089771	-0.01058142	-0.10925782	-0.03380293	17.86185265
F119	COMB3	1.5	12.1025877	3.89110446	-0.01058142	-0.10925782	-0.01793076	18.82920074
F119	COMB3	3	12.1025877	12.96310711	-0.01058142	-0.10925782	-0.00205859	6.188515663
F119	COMB3	4.5	12.1025877	22.03510857	-0.01058142	-0.10925782	0.013813585	-20.0602036
F119	COMB3	6	12.1025877	31.10711288	-0.01058142	-0.10925782	0.029685758	-59.9169579
F120	D	0	7.109125614	-16.7985859	0.007248606	0.031772096	0.023660405	-15.7732286
F120	D	1.5	7.109125614	-8.15858269	0.007248606	0.031772096	0.012787472	2.944689035
F120	D	3	7.109125614	0.481419623	0.007248606	0.031772096	0.001914539	8.70257473
F120	D	4.5	7.109125614	9.121421814	0.007248606	0.031772096	-0.00895839	1.500427008
F120	D	6	7.109125614	17.76142311	0.007248606	0.031772096	-0.01983133	-18.6617527
F120	L	0	3.802365303	0.706665993	0.000850158	0.004232775	0.003044961	1.476085305
F120	L	1.5	3.802365303	0.706665993	0.000850158	0.004232775	0.001769721	0.416083992
F120	L	3	3.802365303	0.706665993	0.000850158	0.004232775	0.00049448	-0.64391738
F120	L	4.5	3.802365303	0.706665993	0.000850158	0.004232775	-0.00078076	-1.70391881
F120	L	6	3.802365303	0.706665993	0.000850158	0.004232775	-0.002056	-2.76392031
F120	EX	0	-0.04908752	0.186816439	-0.02682193	-0.01292829	-0.07465665	0.521987438
F120	EX	1.5	-0.04908752	0.186816439	-0.02682193	-0.01292829	-0.03442366	0.241762191
F120	EX	3	-0.04908752	0.186816439	-0.02682193	-0.01292829	0.00580932	-0.0384631
F120	EX	4.5	-0.04908752	0.186816439	-0.02682193	-0.01292829	0.046042301	-0.31868839
F120	EX	6	-0.04908752	0.186816439	-0.02682193	-0.01292829	0.086275287	-0.59891367
F120	EY	0	3.68403101	10.83697605	-0.04889578	-0.00097845	-0.13449386	29.91100883
F120	EY	1.5	3.68403101	10.83697605	-0.04889578	-0.00097845	-0.06115002	13.65550804
F120	EY	3	3.68403101	10.83697605	-0.04889578	-0.00097845	0.012193806	-2.59999228
F120	EY	4.5	3.68403101	10.83697605	-0.04889578	-0.00097845	0.085537635	-18.8554935
F120	EY	6	3.68403101	10.83697605	-0.04889578	-0.00097845	0.158881471	-35.1109924
F120	COMB1	0	14.61473465	-19.0276375	0.01005858	0.044898957	0.033264421	-16.5661373
F120	COMB1	1.5	14.61473465	-8.65963364	0.01005858	0.044898957	0.018176518	4.199361324
F120	COMB1	3	14.61473465	1.708369136	0.01005858	0.044898957	0.003088615	9.41282177
F120	COMB1	4.5	14.61473465	12.07637119	0.01005858	0.044898957	-0.01199929	-0.92575765
F120	COMB1	6	14.61473465	22.44437408	0.01005858	0.044898957	-0.02708719	-26.8163757
F120	COMB2	0	9.771990776	-13.8089123	-0.03528403	0.021005033	-0.0938326	-6.13469887
F120	COMB2	1.5	9.771990776	-4.73690939	-0.03528403	0.021005033	-0.04090644	7.774698734
F120	COMB2	3	9.771990776	4.335093021	-0.03528403	0.021005033	0.012019723	8.076062202
F120	COMB2	4.5	9.771990776	13.40709496	-0.03528403	0.021005033	0.064945884	-5.23060894
F120	COMB2	6	9.771990776	22.47909737	-0.03528403	0.021005033	0.117872052	-32.1453133
F120	COMB3	0	12.51509666	-5.9782424	-0.05191064	0.029594246	-0.13893281	15.47406197
F120	COMB3	1.5	12.51509666	3.09376049	-0.05191064	0.029594246	-0.06106667	17.63742828
F120	COMB3	3	12.51509666	12.1657629	-0.05191064	0.029594246	0.016799461	6.192761421
F120	COMB3	4.5	12.51509666	21.23776436	-0.05191064	0.029594246	0.094665587	-18.8599415

F120	COMB3	6	12.51509666	30.30976677	-0.05191064	0.029594246	0.172531724	-57.5206757
F121	D	0	7.106216908	-16.8000889	-0.0078318	-0.03059888	-0.02507171	-15.7782755
F121	D	1.5	7.106216908	-8.16008663	-0.0078318	-0.03059888	-0.01332399	2.941898108
F121	D	3	7.106216908	0.479915768	-0.0078318	-0.03059888	-0.00157626	8.702039719
F121	D	4.5	7.106216908	9.11991787	-0.0078318	-0.03059888	0.010171467	1.502147675
F121	D	6	7.106216908	17.75992012	-0.0078318	-0.03059888	0.021919193	-18.6577759
F121	L	0	3.884432793	0.721164942	0.002092745	-0.01167595	0.004344159	1.50161469
F121	L	1.5	3.884432793	0.721164942	0.002092745	-0.01167595	0.001205034	0.419864863
F121	L	3	3.884432793	0.721164942	0.002092745	-0.01167595	-0.00193409	-0.66188496
F121	L	4.5	3.884432793	0.721164942	0.002092745	-0.01167595	-0.00507321	-1.74363482
F121	L	6	3.884432793	0.721164942	0.002092745	-0.01167595	-0.00821234	-2.82538462
F121	EX	0	0.044556867	-0.18974927	-0.02538959	-0.01346561	-0.07237008	-0.53008509
F121	EX	1.5	0.044556867	-0.18974927	-0.02538959	-0.01346561	-0.03428562	-0.24546057
F121	EX	3	0.044556867	-0.18974927	-0.02538959	-0.01346561	0.003798845	0.039163984
F121	EX	4.5	0.044556867	-0.18974927	-0.02538959	-0.01346561	0.041883312	0.323788553
F121	EX	6	0.044556867	-0.18974927	-0.02538959	-0.01346561	0.079967774	0.6084131
F121	EY	0	3.682904243	10.83711624	0.048911802	0.000978277	0.134539843	29.91140556
F121	EY	1.5	3.682904243	10.83711624	0.048911802	0.000978277	0.061171968	13.6556921
F121	EY	3	3.682904243	10.83711624	0.048911802	0.000978277	-0.0121959	-2.60001898
F121	EY	4.5	3.682904243	10.83711624	0.048911802	0.000978277	-0.08556376	-18.8557301
F121	EY	6	3.682904243	10.83711624	0.048911802	0.000978277	-0.15893164	-35.1114426
F121	COMB1	0	14.74255276	-19.0062428	-0.00604977	-0.05540019	-0.0231354	-16.5313473
F121	COMB1	1.5	14.74255276	-8.63823986	-0.00604977	-0.05540019	-0.01406073	4.202061653
F121	COMB1	3	14.74255276	1.729762912	-0.00604977	-0.05540019	-0.00498606	9.383431435
F121	COMB1	4.5	14.74255276	12.09776497	-0.00604977	-0.05540019	0.004088617	-0.98723859
F121	COMB1	6	14.74255276	22.46576881	-0.00604977	-0.05540019	0.013163289	-26.9099483
F121	COMB2	0	9.891355515	-14.1956253	-0.01843518	-0.0494355	-0.05747988	-7.22072554
F121	COMB2	1.5	9.891355515	-5.12362242	-0.01843518	-0.0494355	-0.02982705	7.268742085
F121	COMB2	3	9.891355515	3.948379755	-0.01843518	-0.0494355	-0.00217422	8.150176048
F121	COMB2	4.5	9.891355515	13.02038193	-0.01843518	-0.0494355	0.02547862	-4.57642365
F121	COMB2	6	9.891355515	22.09238434	-0.01843518	-0.0494355	0.053131446	-30.9110584
F121	COMB3	0	12.56620884	-6.0937252	0.035795499	-0.03902123	0.093513362	15.14581871
F121	COMB3	1.5	12.56620884	2.978277445	0.035795499	-0.03902123	0.039819993	17.48240662
F121	COMB3	3	12.56620884	12.05027962	0.035795499	-0.03902123	-0.01387337	6.210964203
F121	COMB3	4.5	12.56620884	21.12228203	0.035795499	-0.03902123	-0.06756673	-18.6685123
F121	COMB3	6	12.56620884	30.19428444	0.035795499	-0.03902123	-0.12126011	-57.1560249
F122	D	0	7.11630106	-16.8964405	-0.0527828	0.082398571	-0.14492397	-15.9185944
F122	D	1.5	7.11630106	-8.25643921	-0.0527828	0.082398571	-0.06574961	2.946108341
F122	D	3	7.11630106	0.38356337	-0.0527828	0.082398571	0.013424759	8.85077858
F122	D	4.5	7.11630106	9.023565292	-0.0527828	0.082398571	0.092599124	1.795415878
F122	D	6	7.11630106	17.6635685	-0.0527828	0.082398571	0.171773493	-18.2199802
F122	L	0	5.184015751	0.916457534	-0.00304989	0.003989417	-0.00895835	1.912981629
F122	L	1.5	5.184015751	0.916457534	-0.00304989	0.003989417	-0.0043835	0.53829217
F122	L	3	5.184015751	0.916457534	-0.00304989	0.003989417	0.000191343	-0.83639723
F122	L	4.5	5.184015751	0.916457534	-0.00304989	0.003989417	0.004766189	-2.21108675
F122	L	6	5.184015751	0.916457534	-0.00304989	0.003989417	0.009341034	-3.58577609
F122	EX	0	-0.12254571	-0.21941088	-0.00349424	-0.01315981	-0.01250602	-0.60013151
F122	EX	1.5	-0.12254571	-0.21941088	-0.00349424	-0.01315981	-0.00726464	-0.27101442
F122	EX	3	-0.12254571	-0.21941088	-0.00349424	-0.01315981	-0.00202326	0.058102652
F122	EX	4.5	-0.12254571	-0.21941088	-0.00349424	-0.01315981	0.003218121	0.387219727
F122	EX	6	-0.12254571	-0.21941088	-0.00349424	-0.01315981	0.008459499	0.716336846
F122	EY	0	3.326712608	11.71036911	0.068768524	0.000904875	0.191227764	32.35420609
F122	EY	1.5	3.326712608	11.71036911	0.068768524	0.000904875	0.088074744	14.78861141
F122	EY	3	3.326712608	11.71036911	0.068768524	0.000904875	-0.01507827	-2.77698207
F122	EY	4.5	3.326712608	11.71036911	0.068768524	0.000904875	-0.11823129	-20.3425751
F122	EY	6	3.326712608	11.71036911	0.068768524	0.000904875	-0.2213843	-37.9081688
F122	COMB1	0	16.83398628	-18.8093967	-0.06821918	0.105261356	-0.18824212	-16.0415421
F122	COMB1	1.5	16.83398628	-8.44139481	-0.06821918	0.105261356	-0.08591314	4.396597385
F122	COMB1	3	16.83398628	1.926608086	-0.06821918	0.105261356	0.016415859	9.282698631
F122	COMB1	4.5	16.83398628	12.29461098	-0.06821918	0.105261356	0.118744858	-1.38323975
F122	COMB1	6	16.83398628	22.66261292	-0.06821918	0.105261356	0.221073851	-27.6012173
F122	COMB2	0	10.02616119	-13.9909029	-0.03833711	0.074439794	-0.10769904	-6.5414958
F122	COMB2	1.5	10.02616119	-4.91890097	-0.03833711	0.074439794	-0.05019325	7.640888691
F122	COMB2	3	10.02616119	4.153101921	-0.03833711	0.074439794	0.007312542	8.215239525
F122	COMB2	4.5	10.02616119	13.22510433	-0.03833711	0.074439794	0.06481833	-4.81844473
F122	COMB2	6	10.02616119	22.29710579	-0.03833711	0.074439794	0.122324124	-31.4601631
F122	COMB3	0	12.5595274	-5.22580576	0.014723613	0.084579945	0.041857708	17.6709404
F122	COMB3	1.5	12.5595274	3.846196413	0.014723613	0.084579945	0.019772232	18.70564842
F122	COMB3	3	12.5595274	12.91819954	0.014723613	0.084579945	-0.00231324	6.132323265
F122	COMB3	4.5	12.5595274	21.99020195	0.014723613	0.084579945	-0.02439871	-20.049036
F122	COMB3	6	12.5595274	31.06220436	0.014723613	0.084579945	-0.04648418	-59.8384285
F123	D	0	-1.9857471	-49.4414787	-0.07170396	-0.89135718	-0.19435923	-50.0824547
F123	D	1.5	-1.9857471	-25.8014393	-0.07170396	-0.89135718	-0.08680306	6.349856853
F123	D	3	-1.9857471	-2.16140199	-0.07170396	-0.89135718	0.020753104	27.32203484
F123	D	4.5	-1.9857471	21.47863579	-0.07170396	-0.89135718	0.128309265	12.83407784
F123	D	6	-1.9857471	45.11867142	-0.07170396	-0.89135718	0.235865459	-37.1140137
F123	L	0	3.975916147	0.710712314	-0.00867596	-0.015884	-0.02160308	1.477000952
F123	L	1.5	3.975916147	0.710712314	-0.00867596	-0.015884	-0.00858911	0.410929978
F123	L	3	3.975916147	0.710712314	-0.00867596	-0.015884	0.00442485	-0.65514088
F123	L	4.5	3.975916147	0.710712314	-0.00867596	-0.015884	0.017438814	-1.72121167
F123	L	6	3.975916147	0.710712314	-0.00867596	-0.015884	0.030452777	-2.78728247
F123	EX	0	0.157407984	-0.19084729	-0.000903	-0.02775534	-0.00885729	-0.55359697
F123	EX	1.5	0.157407984	-0.19084729	-0.000903	-0.02775534	-0.00750278	-0.26732537
F123	EX	3	0.157407984	-0.19084729	-0.000903	-0.02775534	-0.00614828	0.018946225

F123	EX	4.5	0.157407984	-0.19084729	-0.000903	-0.02775534	-0.00479378	0.305217803
F123	EX	6	0.157407984	-0.19084729	-0.000903	-0.02775534	-0.00343928	0.591489375
F123	EY	0	3.445378304	12.24068546	0.026287707	-0.00119465	0.071305335	33.82474899
F123	EY	1.5	3.445378304	12.24068546	0.026287707	-0.00119465	0.031873688	15.46368122
F123	EY	3	3.445378304	12.24068546	0.026287707	-0.00119465	-0.00755796	-2.89738894
F123	EY	4.5	3.445378304	12.24068546	0.026287707	-0.00119465	-0.04698961	-21.2584591
F123	EY	6	3.445378304	12.24068546	0.026287707	-0.00119465	-0.08642126	-39.6195259
F123	COMB1	0	3.978569269	-58.1926346	-0.09992628	-1.09504294	-0.26779601	-57.7357445
F123	COMB1	1.5	3.978569269	-29.8245869	-0.09992628	-1.09504294	-0.11790626	8.277316093
F123	COMB1	3	3.978569269	-1.45654273	-0.09992628	-1.09504294	0.031983484	31.7382164
F123	COMB1	4.5	3.978569269	26.91150284	-0.09992628	-1.09504294	0.181873232	12.64695454
F123	COMB1	6	3.978569269	55.27954483	-0.09992628	-1.09504294	0.331762969	-48.9964676
F123	COMB2	0	0.415590584	-48.0313873	-0.07067606	-0.97003156	-0.19758828	-42.0394974
F123	COMB2	1.5	0.415590584	-23.2093468	-0.07067606	-0.97003156	-0.09157396	11.3911705
F123	COMB2	3	0.415590584	1.612691283	-0.07067606	-0.97003156	0.014440359	27.58869743
F123	COMB2	4.5	0.415590584	26.43473053	-0.07067606	-0.97003156	0.120454669	6.553085804
F123	COMB2	6	0.415590584	51.25676727	-0.07067606	-0.97003156	0.226468995	-51.7156677
F123	COMB3	0	2.834609985	-38.8970757	-0.05070443	-0.95092577	-0.1388016	-16.7797165
F123	COMB3	1.5	2.834609985	-14.0750332	-0.05070443	-0.95092577	-0.0627448	22.94944954
F123	COMB3	3	2.834609985	10.74700546	-0.05070443	-0.95092577	0.01331202	25.44547653
F123	COMB3	4.5	2.834609985	35.56904602	-0.05070443	-0.95092577	0.089368828	-9.29163837
F123	COMB3	6	2.834609985	60.39108276	-0.05070443	-0.95092577	0.165425658	-81.2618942
F124	D	0	-2.03040886	-37.3619995	-0.11041723	-1.64694262	-0.27450863	-24.5934658
F124	D	1.25	-2.03040886	-17.662014	-0.11041723	-1.64694262	-0.1364871	9.796545029
F124	D	2.5	-2.03040886	2.03797245	-0.11041723	-1.64694262	0.001534454	19.56157303
F124	D	3.75	-2.03040886	21.73795891	-0.11041723	-1.64694262	0.139555991	4.701613903
F124	D	5	-2.03040886	41.43794632	-0.11041723	-1.64694262	0.277577549	-34.783329
F124	L	0	2.473844528	-0.60204905	-0.01546224	-0.11885682	-0.03671108	-1.92274451
F124	L	1.25	2.473844528	-0.60204905	-0.01546224	-0.11885682	-0.01738328	-1.1701833
F124	L	2.5	2.473844528	-0.60204905	-0.01546224	-0.11885682	0.001944516	-0.41762188
F124	L	3.75	2.473844528	-0.60204905	-0.01546224	-0.11885682	0.021272315	0.33493948
F124	L	5	2.473844528	-0.60204905	-0.01546224	-0.11885682	0.04060011	1.087500811
F124	EX	0	-6.10408163	17.60103607	-0.01438448	-0.01227926	-0.05402068	47.99985123
F124	EX	1.25	-6.10408163	17.60103607	-0.01438448	-0.01227926	-0.03604008	25.99855423
F124	EX	2.5	-6.10408163	17.60103607	-0.01438448	-0.01227926	-0.01805948	3.997259855
F124	EX	3.75	-6.10408163	17.60103607	-0.01438448	-0.01227926	-7.8878E-05	-18.0040359
F124	EX	5	-6.10408163	17.60103607	-0.01438448	-0.01227926	0.017901724	-40.0053329
F124	EY	0	-0.02437742	0.01060192	-0.00253158	0.162223458	0.023977472	0.032579668
F124	EY	1.25	-0.02437742	0.01060192	-0.00253158	0.162223458	0.027141944	0.019327266
F124	EY	2.5	-0.02437742	0.01060192	-0.00253158	0.162223458	0.030306414	0.006074865
F124	EY	3.75	-0.02437742	0.01060192	-0.00253158	0.162223458	0.033470884	-0.00717754
F124	EY	5	-0.02437742	0.01060192	-0.00253158	0.162223458	0.036635354	-0.02042994
F124	COMB1	0	1.521660566	-45.7976799	-0.15724026	-2.166502	-0.3881481	-32.5885506
F124	COMB1	1.25	1.521660566	-22.1576958	-0.15724026	-2.166502	-0.19159776	9.883561134
F124	COMB1	2.5	1.521660566	1.482288361	-0.15724026	-2.166502	0.00495257	22.80569267
F124	COMB1	3.75	1.521660566	25.12227249	-0.15724026	-2.166502	0.201502904	6.177839756
F124	COMB1	5	1.521660566	48.76226044	-0.15724026	-2.166502	0.398053229	-39.9999924
F124	COMB2	0	-7.6780715	-21.1993351	-0.13649409	-1.72833824	-0.34815657	23.26130486
F124	COMB2	1.25	-7.6780715	-0.51434916	-0.13649409	-1.72833824	-0.17753896	36.83235931
F124	COMB2	2.5	-7.6780715	20.17063713	-0.13649409	-1.72833824	-0.00692134	24.54717827
F124	COMB2	3.75	-7.6780715	40.85562134	-0.13649409	-1.72833824	0.163696259	-13.5942383
F124	COMB2	5	-7.6780715	61.54061127	-0.13649409	-1.72833824	0.334313869	-77.5918884
F124	COMB3	0	-3.30105019	-33.8642883	-0.12799796	-1.60026288	-0.29163823	-11.2746429
F124	COMB3	1.25	-3.30105019	-13.1793022	-0.12799796	-1.60026288	-0.13164076	18.12760353
F124	COMB3	2.5	-3.30105019	7.505683899	-0.12799796	-1.60026288	0.028356697	21.67361641
F124	COMB3	3.75	-3.30105019	28.19067001	-0.12799796	-1.60026288	0.188354164	-0.63660741
F124	COMB3	5	-3.30105019	48.87565613	-0.12799796	-1.60026288	0.348351628	-48.8030624
F125	D	0	-1.47895849	-39.3060455	0.012430877	-0.0872313	0.061862294	-32.741394
F125	D	1.25	-1.47895849	-19.60606	0.012430877	-0.0872313	0.046323694	4.078673363
F125	D	2.5	-1.47895849	0.093928881	0.012430877	-0.0872313	0.030785097	16.27375412
F125	D	3.75	-1.47895849	19.7939167	0.012430877	-0.0872313	0.015246499	3.843850613
F125	D	5	-1.47895849	39.49390411	0.012430877	-0.0872313	-0.0002921	-33.2110367
F125	L	0	1.53190434	0.160236552	0.001761491	-0.00832964	0.010364505	0.567504942
F125	L	1.25	1.53190434	0.160236552	0.001761491	-0.00832964	0.008162642	0.367209226
F125	L	2.5	1.53190434	0.160236552	0.001761491	-0.00832964	0.005960779	0.166913494
F125	L	3.75	1.53190434	0.160236552	0.001761491	-0.00832964	0.003758916	-0.03338221
F125	L	5	1.53190434	0.160236552	0.001761491	-0.00832964	0.001557052	-0.23367792
F125	EX	0	-3.04015517	13.97998238	-0.00891192	0.012040134	-0.00445787	34.54978943
F125	EX	1.25	-3.04015517	13.97998238	-0.00891192	0.012040134	0.006682033	17.07481194
F125	EX	2.5	-3.04015517	13.97998238	-0.00891192	0.012040134	0.01782194	-0.40016767
F125	EX	3.75	-3.04015517	13.97998238	-0.00891192	0.012040134	0.028961847	-17.8751469
F125	EX	5	-3.04015517	13.97998238	-0.00891192	0.012040134	0.040101755	-35.3501244
F125	EY	0	-0.08040553	0.018721823	0.041269749	0.263396651	0.08914037	0.047194038
F125	EY	1.25	-0.08040553	0.018721823	0.041269749	0.263396651	0.037553184	0.02379176
F125	EY	2.5	-0.08040553	0.018721823	0.041269749	0.263396651	-0.014034	0.00038948
F125	EY	3.75	-0.08040553	0.018721823	0.041269749	0.263396651	-0.06562119	-0.0230128
F125	EY	5	-0.08040553	0.018721823	0.041269749	0.263396651	-0.11720837	-0.04641508
F125	COMB1	0	0.67629689	-46.9108734	0.017735438	-0.11800499	0.090817958	-38.3816643
F125	COMB1	1.25	0.67629689	-23.2708931	0.017735438	-0.11800499	0.068648659	5.481942654
F125	COMB1	2.5	0.67629689	0.36909315	0.017735438	-0.11800499	0.046479363	19.79556656
F125	COMB1	3.75	0.67629689	24.00907898	0.017735438	-0.11800499	0.024310064	4.559209347
F125	COMB1	5	0.67629689	47.64906311	0.017735438	-0.11800499	0.002140765	-40.2271271
F125	COMB2	0	-4.24224472	-26.7456932	0.017383419	0.001214782	0.091685541	1.574198365
F125	COMB2	1.25	-4.24224472	-6.06070805	0.017383419	0.001214782	0.069956265	22.07820129

F125	COMB2	2.5	-4.24224472	14.62427902	0.017383419	0.001214782	0.048226994	16.72596931
F125	COMB2	3.75	-4.24224472	35.30926514	0.017383419	0.001214782	0.026497718	-14.4824991
F125	COMB2	5	-4.24224472	55.99425125	0.017383419	0.001214782	0.004768446	-71.5471954
F125	COMB3	0	-2.11243129	-36.7975197	0.05413327	0.18614243	0.160413384	-23.2669621
F125	COMB3	1.25	-2.11243129	-16.1125355	0.05413327	0.18614243	0.092746794	9.80182457
F125	COMB3	2.5	-2.11243129	4.572452545	0.05413327	0.18614243	0.025080206	17.01437569
F125	COMB3	3.75	-2.11243129	25.25744057	0.05413327	0.18614243	-0.04258639	-1.62930703
F125	COMB3	5	-2.11243129	45.94242477	0.05413327	0.18614243	-0.11025297	-46.1292229
F126	D	0	-1.19256639	-39.36129	-0.00017807	-2.3603E-05	-0.00372867	-32.8178253
F126	D	1.25	-1.19256639	-19.6613007	-0.00017807	-2.3603E-05	-0.00350609	4.071295738
F126	D	2.5	-1.19256639	0.03868657	-0.00017807	-2.3603E-05	-0.0032835	16.33543015
F126	D	3.75	-1.19256639	19.73867416	-0.00017807	-2.3603E-05	-0.00306091	3.974579573
F126	D	5	-1.19256639	39.43866348	-0.00017807	-2.3603E-05	-0.00283832	-33.0112572
F126	L	0	1.56794858	0.054251123	0.002172963	-0.00677156	0.002564476	0.034499403
F126	L	1.25	1.56794858	0.054251123	0.002172963	-0.00677156	-0.00015173	-0.0333145
F126	L	2.5	1.56794858	0.054251123	0.002172963	-0.00677156	-0.00286793	-0.10112841
F126	L	3.75	1.56794858	0.054251123	0.002172963	-0.00677156	-0.00558414	-0.16894232
F126	L	5	1.56794858	0.054251123	0.002172963	-0.00677156	-0.00830034	-0.23675622
F126	EX	0	-1.22563732	14.33743763	0.031324621	0.113002874	0.076134548	35.86970901
F126	EX	1.25	-1.22563732	14.33743763	0.031324621	0.113002874	0.036978777	17.9479084
F126	EX	2.5	-1.22563732	14.33743763	0.031324621	0.113002874	-0.002177	0.026110915
F126	EX	3.75	-1.22563732	14.33743763	0.031324621	0.113002874	-0.04133277	-17.8956871
F126	EX	5	-1.22563732	14.33743763	0.031324621	0.113002874	-0.08048855	-35.817482
F126	EY	0	-0.12003701	-1.5018E-06	-3.9015E-05	-4.1348E-05	-0.07454043	-0.00548108
F126	EY	1.25	-0.12003701	-1.5018E-06	-3.9015E-05	-4.1348E-05	-0.07449166	-0.0054792
F126	EY	2.5	-0.12003701	-1.5018E-06	-3.9015E-05	-4.1348E-05	-0.07444289	-0.00547732
F126	EY	3.75	-0.12003701	-1.5018E-06	-3.9015E-05	-4.1348E-05	-0.07439412	-0.00547545
F126	EY	5	-0.12003701	-1.5018E-06	-3.9015E-05	-4.1348E-05	-0.07434535	-0.00547357
F126	COMB1	0	1.077638149	-47.1467476	0.003263056	-0.01086283	-0.00037125	-39.3261909
F126	COMB1	1.25	1.077638149	-23.5067596	0.003263056	-0.01086283	-0.00445007	4.832251549
F126	COMB1	2.5	1.077638149	0.133225679	0.003263056	-0.01086283	-0.00852889	19.44071007
F126	COMB1	3.75	1.077638149	23.77321053	0.003263056	-0.01086283	-0.01260771	4.499187946
F126	COMB1	5	1.077638149	47.41319656	0.003263056	-0.01086283	-0.01668653	-39.992321
F126	COMB2	0	-2.06463718	-26.4730186	0.032906201	0.114787124	0.052211728	2.675573111
F126	COMB2	1.25	-2.06463718	-5.78802919	0.032906201	0.114787124	0.011078979	22.83872604
F126	COMB2	2.5	-2.06463718	14.8969574	0.032906201	0.114787124	-0.03005377	17.14564514
F126	COMB2	3.75	-2.06463718	35.58194351	0.032906201	0.114787124	-0.07118653	-14.4036694
F126	COMB2	5	-2.06463718	56.26693344	0.032906201	0.114787124	-0.11231928	-71.8092194
F126	COMB3	0	-1.27040553	-36.7959747	0.010323798	0.033394665	-0.05739236	-23.154644
F126	COMB3	1.25	-1.27040553	-16.1109848	0.010323798	0.033394665	-0.07029711	9.912203789
F126	COMB3	2.5	-1.27040553	4.574001312	0.010323798	0.033394665	-0.08320186	17.1228199
F126	COMB3	3.75	-1.27040553	25.25898743	0.010323798	0.033394665	-0.0961066	-1.52279913
F126	COMB3	5	-1.27040553	45.94397736	0.010323798	0.033394665	-0.10901135	-46.0246544
F127	D	0	-1.45320165	-39.3900757	-0.00932446	0.077455178	0.002471374	-32.9854546
F127	D	1.25	-1.45320165	-19.6900902	-0.00932446	0.077455178	0.01412695	3.93964982
F127	D	2.5	-1.45320165	0.009896699	-0.00932446	0.077455178	0.025782526	16.23977089
F127	D	3.75	-1.45320165	19.70988464	-0.00932446	0.077455178	0.037438102	3.914907932
F127	D	5	-1.45320165	39.40987015	-0.00932446	0.077455178	0.049093679	-33.0349388
F127	L	0	1.539624691	-0.17523195	-0.01119764	-0.06463629	-0.0241669	-0.28459689
F127	L	1.25	1.539624691	-0.17523195	-0.01119764	-0.06463629	-0.01016984	-0.06555696
F127	L	2.5	1.539624691	-0.17523195	-0.01119764	-0.06463629	0.003827218	0.153482974
F127	L	3.75	1.539624691	-0.17523195	-0.01119764	-0.06463629	0.017824274	0.37252292
F127	L	5	1.539624691	-0.17523195	-0.01119764	-0.06463629	0.031821329	0.591562808
F127	EX	0	0.588419735	13.87499523	-0.00485158	0.01143619	-0.02918107	35.1258812
F127	EX	1.25	0.588419735	13.87499523	-0.00485158	0.01143619	-0.02311659	17.78214073
F127	EX	2.5	0.588419735	13.87499523	-0.00485158	0.01143619	-0.01705211	0.438395977
F127	EX	3.75	0.588419735	13.87499523	-0.00485158	0.01143619	-0.01098763	-16.9053478
F127	EX	5	0.588419735	13.87499523	-0.00485158	0.01143619	-0.00492315	-34.2490921
F127	EY	0	-0.08039134	-0.0187233	-0.0412253	-0.26336619	-0.1170753	-0.04641872
F127	EY	1.25	-0.08039134	-0.0187233	-0.0412253	-0.26336619	-0.06554367	-0.0230146
F127	EY	2.5	-0.08039134	-0.0187233	-0.0412253	-0.26336619	-0.01401205	0.000389535
F127	EY	3.75	-0.08039134	-0.0187233	-0.0412253	-0.26336619	0.037519574	0.023793664
F127	EY	5	-0.08039134	-0.0187233	-0.0412253	-0.26336619	0.089051194	0.047197793
F127	COMB1	0	0.719557524	-47.5484619	-0.02910559	-0.01047185	-0.03570138	-40.0379028
F127	COMB1	1.25	0.719557524	-23.9084797	-0.02910559	-0.01047185	0.000680598	4.62268877
F127	COMB1	2.5	0.719557524	-0.26849508	-0.02910559	-0.01047185	0.037062578	19.73329735
F127	COMB1	3.75	0.719557524	23.37149048	-0.02910559	-0.01047185	0.07344456	5.293926239
F127	COMB1	5	0.719557524	47.01147461	-0.02910559	-0.01047185	0.109826542	-38.6954269
F127	COMB2	0	-0.45718881	-27.0600567	-0.0313253	-0.01015639	-0.07209875	1.616289377
F127	COMB2	1.25	-0.45718881	-6.37507105	-0.0313253	-0.01015639	-0.03294213	22.51324844
F127	COMB2	2.5	-0.45718881	14.30991554	-0.0313253	-0.01015639	0.006214499	17.55396843
F127	COMB2	3.75	-0.45718881	34.99490356	-0.0313253	-0.01015639	0.045371126	-13.2615423
F127	COMB2	5	-0.45718881	55.67988968	-0.0313253	-0.01015639	0.084527753	-69.9332886
F127	COMB3	0	-0.93993866	-37.0638161	-0.05813276	-0.21196459	-0.13713872	-23.7084637
F127	COMB3	1.25	-0.93993866	-16.378828	-0.05813276	-0.21196459	-0.06447279	9.693190575
F127	COMB3	2.5	-0.93993866	4.306157589	-0.05813276	-0.21196459	0.008193159	17.23860931
F127	COMB3	3.75	-0.93993866	24.99114418	-0.05813276	-0.21196459	0.080859102	-1.07220304
F127	COMB3	5	-0.93993866	45.6761322	-0.05813276	-0.21196459	0.15352504	-45.2392502
F128	D	0	-2.00435758	-41.4796104	0.096435577	1.544963598	0.24072592	-34.9173164
F128	D	1.25	-2.00435758	-21.779623	0.096435577	1.544963598	0.120181456	4.619706631
F128	D	2.5	-2.00435758	-2.07963538	0.096435577	1.544963598	-0.00036301	19.531744
F128	D	3.75	-2.00435758	17.62035179	0.096435577	1.544963598	-0.12090748	9.81879425
F128	D	5	-2.00435758	37.3203392	0.096435577	1.544963598	-0.24145195	-24.5191383
F128	L	0	2.481535196	0.656665087	0.012461952	0.073756076	0.036017258	1.2260952

F128	L	1.25	2.481535196	0.656665087	0.012461952	0.073756076	0.020439815	0.405263841
F128	L	2.5	2.481535196	0.656665087	0.012461952	0.073756076	0.004862375	-0.41556749
F128	L	3.75	2.481535196	0.656665087	0.012461952	0.073756076	-0.01071507	-1.23639882
F128	L	5	2.481535196	0.656665087	0.012461952	0.073756076	-0.02629251	-2.05723023
F128	EX	0	3.610737562	17.29802132	0.014057928	-0.01421615	0.030772503	39.39057159
F128	EX	1.25	3.610737562	17.29802132	0.014057928	-0.01421615	0.013200093	17.76804352
F128	EX	2.5	3.610737562	17.29802132	0.014057928	-0.01421615	-0.00437232	-3.85448527
F128	EX	3.75	3.610737562	17.29802132	0.014057928	-0.01421615	-0.02194473	-25.4770145
F128	EX	5	3.610737562	17.29802132	0.014057928	-0.01421615	-0.03951714	-47.0995407
F128	EY	0	-0.02437829	-0.0106041	0.00252623	-0.16221505	0.036610808	-0.02043501
F128	EY	1.25	-0.02437829	-0.0106041	0.00252623	-0.16221505	0.033453021	-0.00717988
F128	EY	2.5	-0.02437829	-0.0106041	0.00252623	-0.16221505	0.030295234	0.006075247
F128	EY	3.75	-0.02437829	-0.0106041	0.00252623	-0.16221505	0.027137447	0.019330373
F128	EY	5	-0.02437829	-0.0106041	0.00252623	-0.16221505	0.02397966	0.032585502
F128	COMB1	0	1.56522727	-48.7248688	0.135661811	1.971966028	0.346498728	-39.9390259
F128	COMB1	1.25	1.56522727	-25.0848827	0.135661811	1.971966028	0.176921457	6.192070007
F128	COMB1	2.5	1.56522727	-1.44489837	0.135661811	1.971966028	0.007344181	22.77318382
F128	COMB1	3.75	1.56522727	22.19508743	0.135661811	1.971966028	-0.16223308	9.804315567
F128	COMB1	5	1.56522727	45.83507156	0.135661811	1.971966028	-0.33181036	-32.7145348
F128	COMB2	0	2.406542301	-25.4466286	0.120528586	1.579633474	0.307489604	4.485842705
F128	COMB2	1.25	2.406542301	-4.76164246	0.120528586	1.579633474	0.156828865	23.36601257
F128	COMB2	2.5	2.406542301	15.92334461	0.120528586	1.579633474	0.006168132	16.38994789
F128	COMB2	3.75	2.406542301	36.60832977	0.120528586	1.579633474	-0.1444926	-16.4423523
F128	COMB2	5	2.406542301	57.29331589	0.120528586	1.579633474	-0.29515332	-75.1308823
F128	COMB3	0	-0.21110681	-37.9089966	0.112263657	1.470641017	0.312242359	-23.8903885
F128	COMB3	1.25	-0.21110681	-17.2240124	0.112263657	1.470641017	0.171912774	10.56774426
F128	COMB3	2.5	-0.21110681	3.460974693	0.112263657	1.470641017	0.031583197	19.1696434
F128	COMB3	3.75	-0.21110681	24.14596176	0.112263657	1.470641017	-0.10874637	1.91530633
F128	COMB3	5	-0.21110681	44.83094788	0.112263657	1.470641017	-0.24907595	-41.1952629
F129	D	0	-40.3636322	-2.21459436	-2.62242055	0.001969898	-4.68580627	-3.9811399
F129	D	2	-32.6836319	-2.21459436	-2.62242055	0.001969898	0.559034228	0.448048323
F129	D	4	-25.0036335	-2.21459436	-2.62242055	0.001969898	5.803874493	4.877236366
F129	L	0	-0.04862116	-0.00035469	-0.04807357	-0.00321502	-0.09011634	-0.00063837
F129	L	2	-0.04862116	-0.00035469	-0.04807357	-0.00321502	0.006030791	7.1015E-05
F129	L	4	-0.04862116	-0.00035469	-0.04807357	-0.00321502	0.102177918	0.000780397
F129	EX	0	1.425480247	0.224781573	1.371280909	-0.69818127	2.788320541	0.486363351
F129	EX	2	1.425480247	0.224781573	1.371280909	-0.69818127	0.045759048	0.036800262
F129	EX	4	1.425480247	0.224781573	1.371280909	-0.69818127	-2.69680262	-0.41276282
F129	EY	0	20.39327049	2.00301E-05	23.16734505	0.000431824	46.97547913	4.37728E-05
F129	EY	2	20.39327049	2.00301E-05	23.16734505	0.000431824	0.640796185	3.71267E-06
F129	EY	4	20.39327049	2.00301E-05	23.16734505	0.000431824	-45.6938858	-3.6347E-05
F129	COMB1	0	-48.5141487	-2.65808058	-3.22382236	-0.00278015	-5.76715374	-4.77838898
F129	COMB1	2	-39.2981529	-2.65808058	-3.22382236	-0.00278015	0.680490315	0.537771583
F129	COMB1	4	-30.0821533	-2.65808058	-3.22382236	-0.00278015	7.128134251	5.853932381
F129	COMB2	0	-34.4978752	-2.09278035	5.948304653	-0.72142589	12.73470402	-3.67699814
F129	COMB2	2	-26.4338779	-2.09278035	5.948304653	-0.72142589	0.838097036	0.508562565
F129	COMB2	4	-18.3698788	-2.09278035	5.948304653	-0.72142589	-11.0585098	4.694122791
F129	COMB3	0	-20.5351677	-2.25460839	21.98897934	-0.21841802	45.25408936	-4.02714729
F129	COMB3	2	-12.4711704	-2.25460839	21.98897934	-0.21841802	1.276135683	0.482069075
F129	COMB3	4	-4.40717125	-2.25460839	21.98897934	-0.21841802	-42.7018166	4.991285324
F130	D	0	-40.37257	2.217182159	-2.6298964	-0.0064694	-4.70105362	3.986637592
F130	D	2	-32.6925659	2.217182159	-2.6298964	-0.0064694	0.558739007	-0.44772661
F130	D	4	-25.0125675	2.217182159	-2.6298964	-0.0064694	5.818531513	-4.88209057
F130	L	0	-0.0617848	-0.00037336	-0.06342547	-0.00294876	-0.12121031	-0.00069103
F130	L	2	-0.0617848	-0.00037336	-0.06342547	-0.00294876	0.005640617	5.56796E-05
F130	L	4	-0.0617848	-0.00037336	-0.06342547	-0.00294876	0.132491544	0.000802394
F130	EX	0	-1.43215251	0.224782318	-1.3788774	-0.69801319	-2.80379176	0.486370355
F130	EX	2	-1.43215251	0.224782318	-1.3788774	-0.69801319	-0.04603735	0.036805756
F130	EX	4	-1.43215251	0.224782318	-1.3788774	-0.69801319	2.711717129	-0.41275886
F130	EY	0	20.3931179	3.29604E-05	23.16712379	-0.00043094	46.9748764	6.12975E-05
F130	EY	2	20.3931179	3.29604E-05	23.16712379	-0.00043094	0.640636921	-4.6233E-06
F130	EY	4	20.3931179	3.29604E-05	23.16712379	-0.00043094	-45.6936073	-7.0544E-05
F130	COMB1	0	-48.5459366	2.660021305	-3.25735641	-0.0124813	-5.83520079	4.782859802
F130	COMB1	2	-39.329937	2.660021305	-3.25735641	-0.0124813	0.679511786	-0.53718281
F130	COMB1	4	-30.1139355	2.660021305	-3.25735641	-0.0124813	7.194223881	-5.85722494
F130	COMB2	0	-37.4691048	2.56058383	3.089135647	-0.73030108	6.920874596	4.689164639
F130	COMB2	2	-29.4051037	2.56058383	3.089135647	-0.73030108	0.742604673	-0.43200287
F130	COMB2	4	-21.3411045	2.56058383	3.089135647	-0.73030108	-5.43566608	-5.5531702
F130	COMB3	0	-21.4490147	2.398764849	21.1097641	-0.22804837	43.46614075	4.339023113
F130	COMB3	2	-13.3850126	2.398764849	21.1097641	-0.22804837	1.246619701	-0.45850644
F130	COMB3	4	-5.32101297	2.398764849	21.1097641	-0.22804837	-40.9729042	-5.2560358
F131	D	0	-63.1804771	-1.42145157	1.015092731	0.007918007	1.306747675	-3.07492709
F131	D	2	-55.5004807	-1.42145157	1.015092731	0.007918007	-0.72343761	-0.23202425
F131	D	4	-47.8204765	-1.42145157	1.015092731	0.007918007	-2.75362277	2.610878468
F131	L	0	0.178204313	0.013243101	-0.02773915	-0.00418962	-0.06062989	0.027869662
F131	L	2	0.178204313	0.013243101	-0.02773915	-0.00418962	-0.00515158	0.001383464
F131	L	4	0.178204313	0.013243101	-0.02773915	-0.00418962	0.050326716	-0.02510273
F131	EX	0	5.124966621	3.958137274	1.336377501	-1.1360147	2.95507288	8.331277847
F131	EX	2	5.124966621	3.958137274	1.336377501	-1.1360147	0.282318324	0.415003449
F131	EX	4	5.124966621	3.958137274	1.336377501	-1.1360147	-2.39043641	-7.50127029
F131	EY	0	6.384950638	-0.00025091	21.2297287	-0.00144465	48.28376007	-0.0005185
F131	EY	2	6.384950638	-0.00025091	21.2297287	-0.00144465	5.824308872	-1.6689E-05
F131	EY	4	6.384950638	-0.00025091	21.2297287	-0.00144465	-36.6351433	0.000485122
F131	COMB1	0	-75.5314484	-1.68455291	1.173728585	0.002798212	1.471089363	-3.64532089

F135	COMB1	2	-725.410828	0.082792215	-18.9450111	0.021565685	13.32108879	0.244368821
F135	COMB1	4	-716.194824	0.082792215	-18.9450111	0.021565685	51.21110535	0.078784414
F135	COMB2	0	-553.266113	25.27813339	-6.99684858	-0.8000322	-2.94626307	56.6360817
F135	COMB2	2	-545.202087	25.27813339	-6.99684858	-0.8000322	11.0474329	6.079819202
F135	COMB2	4	-537.138123	25.27813339	-6.99684858	-0.8000322	25.04112816	-44.4764442
F135	COMB3	0	-547.138916	7.629468441	6.548925877	-0.36796379	28.30132484	17.21949005
F135	COMB3	2	-539.074951	7.629468441	6.548925877	-0.36796379	15.20347595	1.960554481
F135	COMB3	4	-531.010925	7.629468441	6.548925877	-0.36796379	2.105627537	-13.2983809
F136	D	0	-504.597351	0.125229046	-11.2155514	-0.02785912	-14.7855768	0.192115158
F136	D	2	-496.917358	0.125229046	-11.2155514	-0.02785912	7.645525455	-0.05834289
F136	D	4	-489.237366	0.125229046	-11.2155514	-0.02785912	30.07662773	-0.30880094
F136	L	0	-82.2610168	0.011134756	-3.46458173	-0.00034788	-4.31040859	0.012404126
F136	L	2	-82.2610168	0.011134756	-3.46458173	-0.00034788	2.618754864	-0.00986538
F136	L	4	-82.2610168	0.011134756	-3.46458173	-0.00034788	9.54791832	-0.0321349
F136	EX	0	-0.01322101	24.32554626	-0.0467885	-0.75957668	-0.40713015	54.37119293
F136	EX	2	-0.01322101	24.32554626	-0.0467885	-0.75957668	-0.31355315	5.720103741
F136	EX	4	-0.01322101	24.32554626	-0.0467885	-0.75957668	-0.21997619	-42.9309845
F136	EY	0	8.04175663	0.080776349	18.47185135	0.147424236	42.90327072	0.141012594
F136	EY	2	8.04175663	0.080776349	18.47185135	0.147424236	5.959573269	-0.0205401
F136	EY	4	8.04175663	0.080776349	18.47185135	0.147424236	-30.9841232	-0.1820928
F136	COMB1	0	-737.13446	0.168090463	-19.0019932	-0.03398755	-24.6393452	0.250384808
F136	COMB1	2	-727.918457	0.168090463	-19.0019932	-0.03398755	13.36463833	-0.08579608
F136	COMB1	4	-718.702454	0.168090463	-19.0019932	-0.03398755	51.36862183	-0.42197695
F136	COMB2	0	-553.219971	25.33738327	-7.09746552	-0.76908487	-3.78948355	56.52423096
F136	COMB2	2	-545.156006	25.33738327	-7.09746552	-0.76908487	10.40544701	5.849469662
F136	COMB2	4	-537.09198	25.33738327	-7.09746552	-0.76908487	24.60037804	-44.8252907
F136	COMB3	0	-547.299744	7.882359982	6.513032913	-0.11383285	28.03755569	17.48061752
F136	COMB3	2	-539.235779	7.882359982	6.513032913	-0.11383285	15.01149178	1.715897918
F136	COMB3	4	-531.171753	7.882359982	6.513032913	-0.11383285	1.985431194	-14.0488205
F137	D	0	-643.892944	-0.86742312	-11.6698465	-0.03794893	-15.6668043	-1.21913505
F137	D	2	-636.212952	-0.86742312	-11.6698465	-0.03794893	7.672886372	0.515711129
F137	D	4	-628.532959	-0.86742312	-11.6698465	-0.03794893	31.01257706	2.250557423
F137	L	0	-139.828217	-0.16124645	-4.39291477	0.001999575	-5.20968819	-0.1173152
F137	L	2	-139.828217	-0.16124645	-4.39291477	0.001999575	3.576140881	0.205177695
F137	L	4	-139.828217	-0.16124645	-4.39291477	0.001999575	12.36196995	0.527670562
F137	EX	0	7.5267663	24.72093201	-0.24277647	-0.12846959	-0.61923659	55.06568146
F137	EX	2	7.5267663	24.72093201	-0.24277647	-0.12846959	-0.1336837	5.62382412
F137	EX	4	7.5267663	24.72093201	-0.24277647	-0.12846959	0.351869196	-43.8180313
F137	EY	0	35.28988647	0.077761434	17.71941757	0.242208064	40.32033157	0.144623563
F137	EY	2	35.28988647	0.077761434	17.71941757	0.242208064	4.881501675	-0.01089928
F137	EY	4	35.28988647	0.077761434	17.71941757	0.242208064	-30.5573311	-0.16642213
F137	COMB1	0	-996.396729	-1.29890215	-21.0324802	-0.0423394	-27.1356659	-1.65066636
F137	COMB1	2	-987.180725	-1.29890215	-21.0324802	-0.0423394	14.92928886	0.947137654
F137	COMB1	4	-977.964722	-1.29890215	-21.0324802	-0.0423394	56.99424362	3.544941664
F137	COMB2	0	-701.22699	24.64907265	-8.30676365	-0.09588699	-6.03120089	55.72149277
F137	COMB2	2	-693.162964	24.64907265	-8.30676365	-0.09588699	10.58232498	6.423352242
F137	COMB2	4	-685.098999	24.64907265	-8.30676365	-0.09588699	27.19585037	-42.8747864
F137	COMB3	0	-680.708191	6.907155991	4.891807556	0.174634039	24.0500946	16.18049812
F137	COMB3	2	-672.644165	6.907155991	4.891807556	0.174634039	14.2664814	2.366188049
F137	COMB3	4	-664.5802	6.907155991	4.891807556	0.174634039	4.482867718	-11.448122
F138	D	0	-484.398407	8.486166	-13.1074562	-0.04021308	-20.509304	13.46235657
F138	D	2	-476.718414	8.486166	-13.1074562	-0.04021308	5.705605507	-3.50997257
F138	D	4	-469.038422	8.486166	-13.1074562	-0.04021308	31.92051697	-20.4823017
F138	L	0	-95.1133118	1.404662251	-3.26920986	0.013552539	-3.83535814	1.757499218
F138	L	2	-95.1133118	1.404662251	-3.26920986	0.013552539	2.703060627	-1.05182517
F138	L	4	-95.1133118	1.404662251	-3.26920986	0.013552539	9.241479874	-3.86114955
F138	EX	0	-46.6325569	17.85265541	-0.51341343	-0.33970594	-0.97704273	43.34376907
F138	EX	2	-46.6325569	17.85265541	-0.51341343	-0.33970594	0.04978399	7.638462067
F138	EX	4	-46.6325569	17.85265541	-0.51341343	-0.33970594	1.076610684	-28.0668468
F138	EY	0	37.15060043	0.008778573	18.39189148	0.100784741	41.81521606	0.021535218
F138	EY	2	37.15060043	0.008778573	18.39189148	0.100784741	5.031438351	0.003978071
F138	EY	4	37.15060043	0.008778573	18.39189148	0.100784741	-31.7523403	-0.01357907
F138	COMB1	0	-733.459412	12.43085861	-20.9596844	-0.02657163	-30.7477398	18.96682739
F138	COMB1	2	-724.243408	12.43085861	-20.9596844	-0.02657163	11.17162323	-5.89488745
F138	COMB1	4	-715.027405	12.43085861	-20.9596844	-0.02657163	53.09098816	-30.7566013
F138	COMB2	0	-575.141296	27.83320618	-9.53056717	-0.35780314	-10.5823536	59.55667496
F138	COMB2	2	-567.077271	27.83320618	-9.53056717	-0.35780314	8.478779793	3.890265226
F138	COMB2	4	-559.013306	27.83320618	-9.53056717	-0.35780314	27.53991318	-51.7761421
F138	COMB3	0	-514.260132	14.98574638	4.357130051	-0.03913808	20.8553009	28.36498642
F138	COMB3	2	-506.196167	14.98574638	4.357130051	-0.03913808	12.14104176	-1.60650361
F138	COMB3	4	-498.132172	14.98574638	4.357130051	-0.03913808	3.426784754	-31.5779934
F139	D	0	-684.690063	-7.94277954	0.832249641	0.0267058	1.209673524	-10.8121166
F139	D	2	-677.010071	-7.94277954	0.832249641	0.0267058	-0.45482561	5.073440552
F139	D	4	-669.330078	-7.94277954	0.832249641	0.0267058	-2.11932468	20.95899773
F139	L	0	-108.835999	-2.76129699	0.129838407	-0.00559539	0.12818031	-3.3082962
F139	L	2	-108.835999	-2.76129699	0.129838407	-0.00559539	-0.1314965	2.214297295
F139	L	4	-108.835999	-2.76129699	0.129838407	-0.00559539	-0.3911733	7.736890793
F139	EX	0	50.40367126	19.83826637	0.468963295	-0.40815783	0.998758197	47.7450676
F139	EX	2	50.40367126	19.83826637	0.468963295	-0.40815783	0.060831718	8.068536758
F139	EX	4	50.40367126	19.83826637	0.468963295	-0.40815783	-0.87709481	-31.6079922
F139	EY	0	-6.37793064	-0.02288399	24.98319626	-0.0564874	52.98919296	-0.02224741
F139	EY	2	-6.37793064	-0.02288399	24.98319626	-0.0564874	3.022805214	0.023520563
F139	EY	4	-6.37793064	-0.02288399	24.98319626	-0.0564874	-46.9435844	0.069288537
F139	COMB1	0	-995.765686	-13.9494104	1.206441045	0.023094337	1.656696796	-18.2678146

F143	COMB1	2	-1559.93823	-3.05677247	1.71961987	-0.03325495	-1.53844261	2.300105333
F143	COMB1	4	-1550.72217	-3.05677247	1.71961987	-0.03325495	-4.97768211	8.413649559
F143	COMB2	0	-1042.01843	25.30763435	8.301319122	-0.32594931	16.48681641	58.42076874
F143	COMB2	2	-1033.95447	25.30763435	8.301319122	-0.32594931	-0.11582044	7.805507183
F143	COMB2	4	-1025.8905	25.30763435	8.301319122	-0.32594931	-16.7184582	-42.8097572
F143	COMB3	0	-1050.95386	6.152606964	26.19676971	0.034496278	54.41062927	15.80594921
F143	COMB3	2	-1042.88977	6.152606964	26.19676971	0.034496278	2.017090797	3.50073719
F143	COMB3	4	-1034.82581	6.152606964	26.19676971	0.034496278	-50.3764458	-8.80447578
F144	D	0	-775.566833	7.76239872	0.924701869	-0.0289407	1.265667558	10.6211462
F144	D	2	-767.886841	7.76239872	0.924701869	-0.0289407	-0.58373594	-4.90364885
F144	D	4	-760.206726	7.76239872	0.924701869	-0.0289407	-2.43313956	-20.4284458
F144	L	0	-206.391678	2.74113965	0.234935895	0.004474688	0.195317343	3.364737511
F144	L	2	-206.391678	2.74113965	0.234935895	0.004474688	-0.2745544	-2.11754131
F144	L	4	-206.391678	2.74113965	0.234935895	0.004474688	-0.74442613	-7.59982014
F144	EX	0	-49.8535385	19.44356346	-0.464495	-0.44009238	-0.98862576	46.86433411
F144	EX	2	-49.8535385	19.44356346	-0.464495	-0.44009238	-0.05963586	7.977211952
F144	EX	4	-49.8535385	19.44356346	-0.464495	-0.44009238	0.869354069	-30.9099121
F144	EY	0	-6.3779273	0.022880578	24.98321342	0.05648515	52.98922729	0.022239162
F144	EY	2	-6.3779273	0.022880578	24.98321342	0.05648515	3.022807121	-0.02352199
F144	EY	4	-6.3779273	0.022880578	24.98321342	0.05648515	-46.943615	-0.06928314
F144	COMB1	0	-1260.90686	13.70070171	1.485539675	-0.02756933	1.831308842	18.12895584
F144	COMB1	2	-1251.6908	13.70070171	1.485539675	-0.02756933	-1.13977015	-9.27244473
F144	COMB1	4	-1242.47473	13.70070171	1.485539675	-0.02756933	-4.11084938	-36.6738472
F144	COMB2	0	-932.966003	29.14527321	8.433901787	-0.466681	17.05885506	60.72368622
F144	COMB2	2	-924.901978	29.14527321	8.433901787	-0.466681	0.191053733	2.433148146
F144	COMB2	4	-916.837891	29.14527321	8.433901787	-0.466681	-16.6767483	-55.8573952
F144	COMB3	0	-901.759216	15.16272449	27.13100052	-0.1082979	56.71774673	26.99771309
F144	COMB3	2	-893.69519	15.16272449	27.13100052	-0.1082979	2.455754757	-3.32773328
F144	COMB3	4	-885.631165	15.16272449	27.13100052	-0.1082979	-51.8062401	-33.6531792
F145	D	0	-667.596741	-7.91364002	-0.11100905	-0.02367765	-0.1808953	-10.6792936
F145	D	2	-659.916748	-7.91364002	-0.11100905	-0.02367765	0.041122794	5.147985458
F145	D	4	-652.236755	-7.91364002	-0.11100905	-0.02367765	0.263140887	20.9752636
F145	L	0	-105.859024	-2.77223873	0.023781069	0.001597009	0.079700746	-3.3071537
F145	L	2	-105.859024	-2.77223873	0.023781069	0.001597009	0.032138616	2.237323284
F145	L	4	-105.859024	-2.77223873	0.023781069	0.001597009	-0.01542351	7.781800747
F145	EX	0	50.20786667	24.05063438	0.452309757	-0.08600884	0.957439423	56.21699905
F145	EX	2	50.20786667	24.05063438	0.452309757	-0.08600884	0.052820023	8.115733147
F145	EX	4	50.20786667	24.05063438	0.452309757	-0.08600884	-0.85179931	-39.9855309
F145	EY	0	0.444680393	-0.01157736	24.06870651	-0.05829141	51.37561035	-0.01135234
F145	EY	2	0.444680393	-0.01157736	24.06870651	-0.05829141	3.238204002	0.011802373
F145	EY	4	0.444680393	-0.01157736	24.06870651	-0.05829141	-44.8992043	0.034957085
F145	COMB1	0	-970.49054	-13.9319506	-0.09516115	-0.02585797	-0.08955316	-18.1065979
F145	COMB1	2	-961.274536	-13.9319506	-0.09516115	-0.02585797	0.100769132	9.757299423
F145	COMB1	4	-952.058594	-13.9319506	-0.09516115	-0.02585797	0.291091442	37.62119675
F145	COMB2	0	-682.21698	15.70618343	7.940714836	-0.13173942	17.00943375	45.92600632
F145	COMB2	2	-674.153015	15.70618343	7.940714836	-0.13173942	1.128005624	14.51364326
F145	COMB2	4	-666.088989	15.70618343	7.940714836	-0.13173942	-14.7534227	-16.8987179
F145	COMB3	0	-718.039795	-1.61878347	25.30555153	-0.11265725	54.08115005	5.441422462
F145	COMB3	2	-709.97583	-1.61878347	25.30555153	-0.11265725	3.470055103	8.678990364
F145	COMB3	4	-701.911804	-1.61878347	25.30555153	-0.11265725	-47.1410446	11.91655731
F146	D	0	-880.727783	1.968582988	-0.02235999	-0.00426909	0.100427769	2.590414286
F146	D	2	-873.047791	1.968582988	-0.02235999	-0.00426909	0.145147741	-1.34675145
F146	D	4	-865.367798	1.968582988	-0.02235999	-0.00426909	0.18986772	-5.28391695
F146	L	0	-234.49054	0.304333657	0.016572988	0.001720137	0.088371091	0.391670525
F146	L	2	-234.49054	0.304333657	0.016572988	0.001720137	0.055225119	-0.21699677
F146	L	4	-234.49054	0.304333657	0.016572988	0.001720137	0.022079149	-0.82566404
F146	EX	0	-5.83769703	31.27146149	0.40393737	-0.06619454	0.858854115	68.65998077
F146	EX	2	-5.83769703	31.27146149	0.40393737	-0.06619454	0.050979413	6.117068291
F146	EX	4	-5.83769703	31.27146149	0.40393737	-0.06619454	-0.7568953	-56.4258499
F146	EY	0	0.389165431	-0.00779023	23.05475044	-0.16122061	49.2016716	-0.00820569
F146	EY	2	0.389165431	-0.00779023	23.05475044	-0.16122061	3.092168808	0.007374771
F146	EY	4	0.389165431	-0.00779023	23.05475044	-0.16122061	-43.0173302	0.022955233
F146	COMB1	0	-1432.05823	2.849233389	-0.00031521	-0.00237069	0.261907071	3.735169888
F146	COMB1	2	-1422.84216	2.849233389	-0.00031521	-0.00237069	0.262537479	-1.96329665
F146	COMB1	4	-1413.62622	2.849233389	-0.00031521	-0.00237069	0.263167918	-7.66176271
F146	COMB2	0	-1004.54816	34.52638626	7.662064075	-0.12323655	16.52072525	73.90380859
F146	COMB2	2	-996.484131	34.52638626	7.662064075	-0.12323655	1.196597934	4.851046085
F146	COMB2	4	-988.420166	34.52638626	7.662064075	-0.12323655	-14.1275291	-64.2017212
F146	COMB3	0	-1000.05896	12.00520802	24.3164711	-0.19407363	52.06557846	24.46259117
F146	COMB3	2	-991.994934	12.00520802	24.3164711	-0.19407363	3.432636976	0.452177048
F146	COMB3	4	-983.930969	12.00520802	24.3164711	-0.19407363	-45.2003021	-23.5582371
F147	D	0	-543.230408	0.086788625	-0.37170729	-0.02145119	-0.3488405	0.525896668
F147	D	2	-535.550415	0.086788625	-0.37170729	-0.02145119	0.394573987	0.352319419
F147	D	4	-527.870422	0.086788625	-0.37170729	-0.02145119	1.137988567	0.178742185
F147	L	0	-143.077866	-0.18169193	-0.11148982	0.002364308	-0.09707788	-0.01821502
F147	L	2	-143.077866	-0.18169193	-0.11148982	0.002364308	0.125901774	0.345168799
F147	L	4	-143.077866	-0.18169193	-0.11148982	0.002364308	0.348881394	0.708552659
F147	EX	0	-25.2697716	30.61125374	0.424439698	-0.10895532	0.899196744	67.04160309
F147	EX	2	-25.2697716	30.61125374	0.424439698	-0.10895532	0.050317373	5.819106102
F147	EX	4	-25.2697716	30.61125374	0.424439698	-0.10895532	-0.79856193	-55.4033928
F147	EY	0	0.52832222	-0.01117412	21.63453293	-0.1118237	45.94866943	-0.01295268
F147	EY	2	0.52832222	-0.01117412	21.63453293	-0.1118237	2.679609537	0.009395556
F147	EY	4	0.52832222	-0.01117412	21.63453293	-0.1118237	-40.5894508	0.031743795
F147	COMB1	0	-880.801025	-0.18656074	-0.6244325	-0.02195853	-0.57393318	0.601931989

F147	COMB1	2	-871.585022	-0.18656074	-0.6244325	-0.02195853	0.674931645	0.97505337
F147	COMB1	4	-862.36908	-0.18656074	-0.6244325	-0.02195853	1.923796535	1.34817481
F147	COMB2	0	-641.449219	31.71302223	6.828761101	-0.16977222	15.00763798	69.93043518
F147	COMB2	2	-633.385254	31.71302223	6.828761101	-0.16977222	1.350117207	6.504398346
F147	COMB2	4	-625.321228	31.71302223	6.828761101	-0.16977222	-12.3074036	-56.9216385
F147	COMB3	0	-622.866699	9.664707184	22.42454529	-0.1735148	48.13248825	21.65095901
F147	COMB3	2	-614.802673	9.664707184	22.42454529	-0.1735148	3.283401728	2.32154727
F147	COMB3	4	-606.738708	9.664707184	22.42454529	-0.1735148	-41.5656853	-17.007864
F148	D	0	-542.200195	0.058517326	-0.37407067	0.018987784	-0.35343844	-0.19045025
F148	D	2	-534.520142	0.058517326	-0.37407067	0.018987784	0.394702852	-0.30748489
F148	D	4	-526.840149	0.058517326	-0.37407067	0.018987784	1.142844081	-0.42451954
F148	L	0	-146.227188	0.190715656	-0.1125775	-0.00508251	-0.09849743	0.126024842
F148	L	2	-146.227188	0.190715656	-0.1125775	-0.00508251	0.12665756	-0.25540644
F148	L	4	-146.227188	0.190715656	-0.1125775	-0.00508251	0.351812541	-0.63683772
F148	EX	0	24.9226265	30.40102386	-0.42867491	-0.10706105	-0.90860897	66.50534058
F148	EX	2	24.9226265	30.40102386	-0.42867491	-0.10706105	-0.05125925	5.703294754
F148	EX	4	24.9226265	30.40102386	-0.42867491	-0.10706105	0.806090474	-55.0987473
F148	EY	0	0.528342962	0.01117449	21.63438606	0.111819208	45.94829559	0.012953503
F148	EY	2	0.528342962	0.01117449	21.63438606	0.111819208	2.679524422	-0.00939548
F148	EY	4	0.528342962	0.01117449	21.63438606	0.111819208	-40.5892448	-0.03174445
F148	COMB1	0	-884.603699	0.375365853	-0.62900883	0.014653322	-0.58172202	-0.02690055
F148	COMB1	2	-875.387695	0.375365853	-0.62900883	0.014653322	0.676295519	-0.77763218
F148	COMB1	4	-866.171692	0.375365853	-0.62900883	0.014653322	1.93431294	-1.52836382
F148	COMB2	0	-589.4104	31.59009933	5.94291687	-0.05724896	13.1311655	68.67683411
F148	COMB2	2	-581.346375	31.59009933	5.94291687	-0.05724896	1.245332003	5.496638298
F148	COMB2	4	-573.28241	31.59009933	5.94291687	-0.05724896	-10.640501	-57.6835556
F148	COMB3	0	-606.96637	9.709574699	22.15283775	0.102022119	47.5573616	20.80250931
F148	COMB3	2	-598.902344	9.709574699	22.15283775	0.102022119	3.251689196	1.383360505
F148	COMB3	4	-590.838318	9.709574699	22.15283775	0.102022119	-41.0539818	-18.0357876
F149	D	0	-883.328125	-2.02469468	-0.02536221	0.00182117	0.096795991	-2.57433271
F149	D	2	-875.648132	-2.02469468	-0.02536221	0.00182117	0.147520408	1.475056052
F149	D	4	-867.96814	-2.02469468	-0.02536221	0.00182117	0.198244825	5.524445057
F149	L	0	-294.33548	-0.38427418	0.006705736	-0.00432768	0.08420299	-0.41983706
F149	L	2	-294.33548	-0.38427418	0.006705736	-0.00432768	0.07079152	0.348711252
F149	L	4	-294.33548	-0.38427418	0.006705736	-0.00432768	0.05738005	1.117259502
F149	EX	0	5.798026085	30.2417984	-0.40284038	-0.06480253	-0.85609496	66.5249939
F149	EX	2	5.798026085	30.2417984	-0.40284038	-0.06480253	-0.05041426	6.041406155
F149	EX	4	5.798026085	30.2417984	-0.40284038	-0.06480253	0.755266428	-54.4421844
F149	EY	0	0.389166385	0.007790438	23.05477905	0.161226615	49.20171738	0.00820633
F149	EY	2	0.389166385	0.007790438	23.05477905	0.161226615	3.092163324	-0.00737454
F149	EY	4	0.389166385	0.007790438	23.05477905	0.161226615	-43.0173912	-0.02295542
F149	COMB1	0	-1530.93054	-3.04447222	-0.01970547	-0.00473888	0.250879973	-3.76093841
F149	COMB1	2	-1521.71448	-3.04447222	-0.01970547	-0.00473888	0.290290922	2.328005314
F149	COMB1	4	-1512.49854	-3.04447222	-0.01970547	-0.00473888	0.329701871	8.416949272
F149	COMB2	0	-1014.08667	29.05573845	6.820797443	-0.01573522	14.74064255	66.0206604
F149	COMB2	2	-1006.02271	29.05573845	6.820797443	-0.01573522	1.099048376	7.909184933
F149	COMB2	4	-997.958679	29.05573845	6.820797443	-0.01573522	-12.5425453	-50.2022858
F149	COMB3	0	-1017.97522	7.287370682	24.05610466	0.149424165	51.52029419	18.12869263
F149	COMB3	2	-1009.91119	7.287370682	24.05610466	0.149424165	3.408086777	3.553952456
F149	COMB3	4	-1001.84723	7.287370682	24.05610466	0.149424165	-44.7041206	-11.0207872
F150	D	0	-755.75946	7.749346256	-0.12782851	0.020641485	-0.19288014	10.52307701
F150	D	2	-748.079468	7.749346256	-0.12782851	0.020641485	0.062776856	-4.97561312
F150	D	4	-740.399475	7.749346256	-0.12782851	0.020641485	0.318433851	-20.4743042
F150	L	0	-200.381821	2.763329744	0.007434371	-0.00471251	0.071844928	3.39098525
F150	L	2	-200.381821	2.763329744	0.007434371	-0.00471251	0.056976188	-2.13567376
F150	L	4	-200.381821	2.763329744	0.007434371	-0.00471251	0.042107448	-7.66233253
F150	EX	0	-49.8202972	22.46704865	-0.44634193	-0.08556602	-0.94462538	52.99033356
F150	EX	2	-49.8202972	22.46704865	-0.44634193	-0.08556602	-0.05194163	8.056238174
F150	EX	4	-49.8202972	22.46704865	-0.44634193	-0.08556602	0.840742171	-36.8778572
F150	EY	0	0.444680125	0.011577521	24.06872177	0.058289014	51.37564468	0.011352809
F150	EY	2	0.444680125	0.011577521	24.06872177	0.058289014	3.23820591	-0.01180223
F150	EY	4	0.444680125	0.011577521	24.06872177	0.058289014	-44.8992348	-0.03495727
F150	COMB1	0	-1227.52234	13.72054291	-0.14149921	0.01722976	-0.11650428	18.05326843
F150	COMB1	2	-1218.30627	13.72054291	-0.14149921	0.01722976	0.166494116	-9.38781357
F150	COMB1	4	-1209.09033	13.72054291	-0.14149921	0.01722976	0.449492544	-36.8288956
F150	COMB2	0	-908.091675	32.26430511	6.987805367	-0.05001067	15.02574825	66.96596527
F150	COMB2	2	-900.027649	32.26430511	6.987805367	-0.05001067	1.050138474	2.437357903
F150	COMB2	4	-891.963684	32.26430511	6.987805367	-0.05001067	-12.9254713	-62.0912476
F150	COMB3	0	-871.894226	16.09653854	24.99968147	0.054439288	53.46697617	28.82126617
F150	COMB3	2	-863.8302	16.09653854	24.99968147	0.054439288	3.46761775	-3.37180829
F150	COMB3	4	-855.766235	16.09653854	24.99968147	0.054439288	-46.5317421	-35.5648842
F151	D	0	-662.181274	-8.28299427	0.061283022	-0.0158076	0.117049463	-11.0404596
F151	D	2	-654.501282	-8.28299427	0.061283022	-0.0158076	-0.00551656	5.525527
F151	D	4	-646.821289	-8.28299427	0.061283022	-0.0158076	-0.12808259	22.09151268
F151	L	0	-106.234467	-2.64621019	0.037335414	0.002109151	0.081217065	-3.17380762
F151	L	2	-106.234467	-2.64621019	0.037335414	0.002109151	0.006546243	2.118612051
F151	L	4	-106.234467	-2.64621019	0.037335414	0.002109151	-0.06812458	7.4110322
F151	EX	0	50.24850464	20.77337456	0.435674191	0.242294908	0.929474711	49.80226898
F151	EX	2	50.24850464	20.77337456	0.435674191	0.242294908	0.058126338	8.255522728
F151	EX	4	50.24850464	20.77337456	0.435674191	0.242294908	-0.81322199	-33.2912216
F151	EY	0	-0.09420061	-0.00076248	24.01188469	-0.05838254	51.21781158	-0.00087838
F151	EY	2	-0.09420061	-0.00076248	24.01188469	-0.05838254	3.194048882	0.000646585
F151	EY	4	-0.09420061	-0.00076248	24.01188469	-0.05838254	-44.8297157	0.002171546
F151	COMB1	0	-964.592651	-14.1735287	0.133276284	-0.01559448	0.270406663	-18.326643

F151	COMB1	2	-955.376648	-14.1735287	0.133276284	-0.01559448	0.003854115	10.02041149
F151	COMB1	4	-946.160645	-14.1735287	0.133276284	-0.01559448	-0.26269844	38.36746597
F151	COMB2	0	-676.776672	11.9695034	8.090774536	0.216451138	17.24410248	38.95284271
F151	COMB2	2	-668.712646	11.9695034	8.090774536	0.216451138	1.06255579	15.01383591
F151	COMB2	4	-660.648682	11.9695034	8.090774536	0.216451138	-15.1189909	-8.92516804
F151	COMB3	0	-713.024841	-2.98788714	25.42582512	-0.00091237	54.2199707	3.094560862
F151	COMB3	2	-704.960815	-2.98788714	25.42582512	-0.00091237	3.368330717	9.070334435
F151	COMB3	4	-696.896851	-2.98788714	25.42582512	-0.00091237	-47.4833107	15.0461092
F152	D	0	-874.355591	1.102079034	0.129712433	-0.00115464	0.27560544	1.436465025
F152	D	2	-866.675598	1.102079034	0.129712433	-0.00115464	0.016180599	-0.7676928
F152	D	4	-858.995605	1.102079034	0.129712433	-0.00115464	-0.24324425	-2.97185063
F152	L	0	-232.396896	0.228679672	0.045108344	0.001866132	0.098265842	0.24525933
F152	L	2	-232.396896	0.228679672	0.045108344	0.001866132	0.008049162	-0.21209997
F152	L	4	-232.396896	0.228679672	0.045108344	0.001866132	-0.08216751	-0.66945928
F152	EX	0	-9.40720463	28.36088371	0.408591092	0.218426466	0.863323212	62.72264481
F152	EX	2	-9.40720463	28.36088371	0.408591092	0.218426466	0.04614111	6.000884533
F152	EX	4	-9.40720463	28.36088371	0.408591092	0.218426466	-0.77104098	-50.7208748
F152	EY	0	-0.11173632	-0.00035898	22.98738289	-0.16327216	49.02006149	-0.00053075
F152	EY	2	-0.11173632	-0.00035898	22.98738289	-0.16327216	3.045297384	0.00018721
F152	EY	4	-0.11173632	-0.00035898	22.98738289	-0.16327216	-42.9294662	0.000905174
F152	COMB1	0	-1421.06177	1.688382268	0.227828264	0.001600247	0.487951875	2.116173029
F152	COMB1	2	-1411.8457	1.688382268	0.227828264	0.001600247	0.032295376	-1.26059127
F152	COMB1	4	-1402.62976	1.688382268	0.227828264	0.001600247	-0.42336112	-4.6373558
F152	COMB2	0	-1001.05005	30.58261871	7.814324856	0.174016118	16.65519905	66.50331879
F152	COMB2	2	-992.986084	30.58261871	7.814324856	0.174016118	1.026549816	5.338085175
F152	COMB2	4	-984.922058	30.58261871	7.814324856	0.174016118	-14.6020985	-55.8271446
F152	COMB3	0	-994.359009	10.1625185	24.41586685	-0.10325597	52.06335068	21.34262085
F152	COMB3	2	-986.294983	10.1625185	24.41586685	-0.10325597	3.231621742	1.017586231
F152	COMB3	4	-978.231018	10.1625185	24.41586685	-0.10325597	-45.6001053	-19.3074493
F153	D	0	-715.979675	0.073622361	0.112516642	-0.01329283	0.157038152	0.353487968
F153	D	2	-708.299683	0.073622361	0.112516642	-0.01329283	-0.06799512	0.206243262
F153	D	4	-700.61969	0.073622361	0.112516642	-0.01329283	-0.29302838	0.058998555
F153	L	0	-197.459457	0.060921345	0.037555814	0.001768785	0.040529296	0.218947947
F153	L	2	-197.459457	0.060921345	0.037555814	0.001768785	-0.03458233	0.097105272
F153	L	4	-197.459457	0.060921345	0.037555814	0.001768785	-0.10969396	-0.0247374
F153	EX	0	-1.69130528	27.55562019	0.419124931	0.179842606	0.887454689	61.22301865
F153	EX	2	-1.69130528	27.55562019	0.419124931	0.179842606	0.049204975	6.111781597
F153	EX	4	-1.69130528	27.55562019	0.419124931	0.179842606	-0.78904474	-48.9994545
F153	EY	0	-0.21300468	-0.00021985	21.42729378	-0.11111201	45.4764328	-0.00030043
F153	EY	2	-0.21300468	-0.00021985	21.42729378	-0.11111201	2.621851921	0.000139268
F153	EY	4	-0.21300468	-0.00021985	21.42729378	-0.11111201	-40.2327309	0.000578963
F153	COMB1	0	-1175.11072	0.185820982	0.195109278	-0.01312133	0.25329265	0.774502277
F153	COMB1	2	-1165.89478	0.185820982	0.195109278	-0.01312133	-0.13692586	0.402860373
F153	COMB1	4	-1156.67871	0.185820982	0.195109278	-0.01312133	-0.52714437	0.031218423
F153	COMB2	0	-815.795959	28.61649132	7.313364029	0.137736514	15.42124844	63.80585861
F153	COMB2	2	-807.731995	28.61649132	7.313364029	0.137736514	0.794522226	6.572881222
F153	COMB2	4	-799.667969	28.61649132	7.313364029	0.137736514	-13.8322048	-50.6600952
F153	COMB3	0	-814.734802	8.776283264	22.76065445	-0.07341748	48.2074585	19.72506714
F153	COMB3	2	-806.670776	8.776283264	22.76065445	-0.07341748	2.686155796	2.172500849
F153	COMB3	4	-798.606812	8.776283264	22.76065445	-0.07341748	-42.8351479	-15.380064
F154	D	0	-715.371399	0.07984072	0.110107571	0.01259258	0.152295455	0.00526869
F154	D	2	-707.691406	0.07984072	0.110107571	0.01259258	-0.06791966	-0.15441273
F154	D	4	-700.011353	0.07984072	0.110107571	0.01259258	-0.28813478	-0.31409416
F154	L	0	-200.466354	-0.03978039	0.03475602	-0.00260536	0.037074383	-0.07826205
F154	L	2	-200.466354	-0.03978039	0.03475602	-0.00260536	-0.03243764	0.001298719
F154	L	4	-200.466354	-0.03978039	0.03475602	-0.00260536	-0.10194968	0.08085949
F154	EX	0	1.384843707	27.46635818	-0.42328468	0.171979964	-0.8967889	61.02386856
F154	EX	2	1.384843707	27.46635818	-0.42328468	0.171979964	-0.05021958	6.091153145
F154	EX	4	1.384843707	27.46635818	-0.42328468	0.171979964	0.796349704	-48.8415565
F154	EY	0	-0.21298933	0.000221927	21.42723083	0.111111969	45.47625732	0.000305185
F154	EY	2	-0.21298933	0.000221927	21.42723083	0.111111969	2.621795893	-0.00013867
F154	EY	4	-0.21298933	0.000221927	21.42723083	0.111111969	-40.2326622	-0.00058252
F154	COMB1	0	-1179.19177	0.032160249	0.187738717	0.010942516	0.242073566	-0.11889685
F154	COMB1	2	-1169.97583	0.032160249	0.187738717	0.010942516	-0.13340382	-0.18321733
F154	COMB1	4	-1160.75977	0.032160249	0.187738717	0.010942516	-0.50888121	-0.24753781
F154	COMB2	0	-812.920593	28.49905396	6.438039303	0.225401059	13.56843281	63.14067841
F154	COMB2	2	-804.856628	28.49905396	6.438039303	0.225401059	0.692354977	6.142575741
F154	COMB2	4	-796.792603	28.49905396	6.438039303	0.225401059	-12.1837225	-50.855526
F154	COMB3	0	-814.07428	8.723438263	22.49181938	0.183242783	47.63916779	19.20371819
F154	COMB3	2	-806.010254	8.723438263	22.49181938	0.183242783	2.655533075	1.756843328
F154	COMB3	4	-797.946289	8.723438263	22.49181938	0.183242783	-42.3281021	-15.6900311
F155	D	0	-876.925537	-1.1397711	0.127693117	0.000596609	0.271378279	-1.3840915
F155	D	2	-869.245544	-1.1397711	0.127693117	0.000596609	0.015992083	0.895450473
F155	D	4	-861.565552	-1.1397711	0.127693117	0.000596609	-0.23939413	3.174992561
F155	L	0	-292.191406	-0.28616565	0.044642977	-0.00268968	0.097450987	-0.22868356
F155	L	2	-292.191406	-0.28616565	0.044642977	-0.00268968	0.00816504	0.343647629
F155	L	4	-292.191406	-0.28616565	0.044642977	-0.00268968	-0.08112091	0.915978909
F155	EX	0	9.026745796	28.06513786	-0.40798739	0.219617948	-0.8618176	62.07527924
F155	EX	2	9.026745796	28.06513786	-0.40798739	0.219617948	-0.04584294	5.945014477
F155	EX	4	9.026745796	28.06513786	-0.40798739	0.219617948	0.770131767	-50.1852531
F155	EY	0	-0.11173474	0.000360999	22.98741531	0.16327484	49.02011871	0.000535465
F155	EY	2	-0.11173474	0.000360999	22.98741531	0.16327484	3.045293331	-0.00018653
F155	EY	4	-0.11173474	0.000360999	22.98741531	0.16327484	-42.9295311	-0.00090853
F155	COMB1	0	-1519.81689	-1.82559037	0.224660501	-0.00358756	0.481575519	-2.02680349

F155	COMB1	2	-1510.60083	-1.82559037	0.224660501	-0.00358756	0.032254562	1.624376774
F155	COMB1	4	-1501.38489	-1.82559037	0.224660501	-0.00358756	-0.41706643	5.275557518
F155	COMB2	0	-1003.50464	27.76062965	6.966909409	0.278515339	14.86499977	62.72275162
F155	COMB2	2	-995.440613	27.76062965	6.966909409	0.278515339	0.931183636	7.201503277
F155	COMB2	4	-987.376648	27.76062965	6.966909409	0.278515339	-13.0026331	-48.3197479
F155	COMB3	0	-1010.086	7.553995609	24.15641022	0.240397424	51.51529694	18.02894402
F155	COMB3	2	-1002.02197	7.553995609	24.15641022	0.240397424	3.20248127	2.920955658
F155	COMB3	4	-993.958008	7.553995609	24.15641022	0.240397424	-45.1103325	-12.1870337
F156	D	0	-750.54657	8.130663872	0.058522895	0.015145818	0.111172371	10.91023445
F156	D	2	-742.866577	8.130663872	0.058522895	0.015145818	-0.00587341	-5.35109138
F156	D	4	-735.186584	8.130663872	0.058522895	0.015145818	-0.12291919	-21.6124172
F156	L	0	-200.982742	2.653372049	0.03647168	-0.0030805	0.079399444	3.292176962
F156	L	2	-200.982742	2.653372049	0.03647168	-0.0030805	0.006456094	-2.01456642
F156	L	4	-200.982742	2.653372049	0.03647168	-0.0030805	-0.06648726	-7.32131004
F156	EX	0	-49.5617371	20.41860771	-0.4292419	0.260525793	-0.91538239	48.96857834
F156	EX	2	-49.5617371	20.41860771	-0.4292419	0.260525793	-0.05689869	8.13136673
F156	EX	4	-49.5617371	20.41860771	-0.4292419	0.260525793	0.801585078	-32.7058449
F156	EY	0	-0.09420404	0.000763921	24.01189995	0.058381315	51.21784592	0.000882085
F156	EY	2	-0.09420404	0.000763921	24.01189995	0.058381315	3.19405055	-0.00064576
F156	EY	4	-0.09420404	0.000763921	24.01189995	0.058381315	-44.8297462	-0.0021736
F156	COMB1	0	-1222.22827	14.00219154	0.128582165	0.013246188	0.260445952	18.3597641
F156	COMB1	2	-1213.01233	14.00219154	0.128582165	0.013246188	0.00328166	-9.64461613
F156	COMB1	4	-1203.79626	14.00219154	0.128582165	0.013246188	-0.25388265	-37.6489983
F156	COMB2	0	-902.709534	30.50650978	7.192420959	0.302967072	15.32794285	63.17553711
F156	COMB2	2	-894.645569	30.50650978	7.192420959	0.302967072	0.943102419	2.162526608
F156	COMB2	4	-886.581543	30.50650978	7.192420959	0.302967072	-13.4417381	-58.8504868
F156	COMB3	0	-867.09436	15.80567265	25.15022087	0.158298761	53.63213348	27.91880989
F156	COMB3	2	-859.030334	15.80567265	25.15022087	0.158298761	3.331696749	-3.69253206
F156	COMB3	4	-850.966309	15.80567265	25.15022087	0.158298761	-46.9687424	-35.303875
F157	D	0	-660.13623	-8.25856209	0.21448797	0.003914699	0.386204362	-11.0107317
F157	D	2	-652.456238	-8.25856209	0.21448797	0.003914699	-0.04277153	5.506390095
F157	D	4	-644.776184	-8.25856209	0.21448797	0.003914699	-0.47174743	22.02351189
F157	L	0	-105.998558	-2.62932396	0.053387567	0.001680109	0.086808138	-3.15425873
F157	L	2	-105.998558	-2.62932396	0.053387567	0.001680109	-0.01996698	2.104388952
F157	L	4	-105.998558	-2.62932396	0.053387567	0.001680109	-0.12674211	7.363036633
F157	EX	0	49.69392395	20.18067551	0.43264392	0.050817274	0.924576223	48.52338028
F157	EX	2	49.69392395	20.18067551	0.43264392	0.050817274	0.059288539	8.162032127
F157	EX	4	49.69392395	20.18067551	0.43264392	0.050817274	-0.80599916	-32.1993141
F157	EY	0	-0.56729126	-6.3942E-05	23.80298805	-0.05878309	50.8142662	-0.00011676
F157	EY	2	-0.56729126	-6.3942E-05	23.80298805	-0.05878309	3.208292723	1.11222E-05
F157	EY	4	-0.56729126	-6.3942E-05	23.80298805	-0.05878309	-44.3976784	0.000139007
F157	COMB1	0	-961.761169	-14.1171923	0.342805654	0.007385813	0.602338254	-18.2596912
F157	COMB1	2	-952.545166	-14.1171923	0.342805654	0.007385813	-0.083273	9.974690437
F157	COMB1	4	-943.329163	-14.1171923	0.342805654	0.007385813	-0.7688843	38.20907211
F157	COMB2	0	-675.278076	11.38725281	8.187757492	0.038718872	17.39628983	37.66680527
F157	COMB2	2	-667.21405	11.38725281	8.187757492	0.038718872	1.020776153	14.8922987
F157	COMB2	4	-659.150085	11.38725281	8.187757492	0.038718872	-15.3547373	-7.88220215
F157	COMB3	0	-711.474609	-3.14288116	25.37145042	-0.04107514	54.07907867	2.729882956
F157	COMB3	2	-703.410645	-3.14288116	25.37145042	-0.04107514	3.336183548	9.015644073
F157	COMB3	4	-695.346619	-3.14288116	25.37145042	-0.04107514	-47.4067116	15.30140591
F158	D	0	-869.549683	0.887827635	0.272511363	0.010160103	0.439449131	1.106086969
F158	D	2	-861.86969	0.887827635	0.272511363	0.010160103	-0.10557353	-0.66956818
F158	D	4	-854.189697	0.887827635	0.272511363	0.010160103	-0.6505962	-2.44522333
F158	L	0	-230.85498	0.157807916	0.076204568	0.002341929	0.112595633	0.132983044
F158	L	2	-230.85498	0.157807916	0.076204568	0.002341929	-0.03981348	-0.18263277
F158	L	4	-230.85498	0.157807916	0.076204568	0.002341929	-0.1922226	-0.49824858
F158	EX	0	-9.85070324	27.61478233	0.4050937	0.042658627	0.857831597	61.13880539
F158	EX	2	-9.85070324	27.61478233	0.4050937	0.042658627	0.047644254	5.909247398
F158	EX	4	-9.85070324	27.61478233	0.4050937	0.042658627	-0.76254302	-49.3203087
F158	EY	0	-0.55714637	7.72338E-05	22.78079414	-0.16429357	48.62054825	1.17823E-05
F158	EY	2	-0.55714637	7.72338E-05	22.78079414	-0.16429357	3.058959246	-0.00014269
F158	EY	4	-0.55714637	7.72338E-05	22.78079414	-0.16429357	-42.5026283	-0.00029715
F158	COMB1	0	-1412.82764	1.317885876	0.448940933	0.015939211	0.707491994	1.540077209
F158	COMB1	2	-1403.61157	1.317885876	0.448940933	0.015939211	-0.19038981	-1.09569418
F158	COMB1	4	-1394.39563	1.317885876	0.448940933	0.015939211	-1.08827162	-3.73146558
F158	COMB2	0	-996.117493	29.5632515	7.90536356	0.003805022	16.70021629	64.48194885
F158	COMB2	2	-988.053467	29.5632515	7.90536356	0.003805022	0.889490485	5.355450153
F158	COMB2	4	-979.989441	29.5632515	7.90536356	0.003805022	-14.921236	-53.7710457
F158	COMB3	0	-989.434448	9.68066597	24.35758018	-0.14766496	51.81867981	20.46201706
F158	COMB3	2	-981.370483	9.68066597	24.35758018	-0.14766496	3.103521585	1.100687265
F158	COMB3	4	-973.306458	9.68066597	24.35758018	-0.14766496	-45.6116371	-18.260643
F159	D	0	-793.831299	0.082828775	0.138241321	0.005027349	0.305497468	0.277887166
F159	D	2	-786.151306	0.082828775	0.138241321	0.005027349	0.02901483	0.11222963
F159	D	4	-778.471313	0.082828775	0.138241321	0.005027349	-0.24746782	-0.05342789
F159	L	0	-225.613892	0.063806966	0.014607859	0.001681147	0.032050759	0.190566748
F159	L	2	-225.613892	0.063806966	0.014607859	0.001681147	0.002835042	0.062952831
F159	L	4	-225.613892	0.063806966	0.014607859	0.001681147	-0.02638067	-0.06466109
F159	EX	0	0.019978199	26.78109741	0.385792971	-0.00147521	0.826868474	59.61283112
F159	EX	2	0.019978199	26.78109741	0.385792971	-0.00147521	0.055282552	6.050639153
F159	EX	4	0.019978199	26.78109741	0.385792971	-0.00147521	-0.71630329	-47.5115547
F159	EY	0	-0.62106985	6.80759E-05	21.15890694	-0.1120936	44.97223282	9.75111E-06
F159	EY	2	-0.62106985	6.80759E-05	21.15890694	-0.1120936	2.654424667	-0.0001264
F159	EY	4	-0.62106985	6.80759E-05	21.15890694	-0.1120936	-39.6633797	-0.00026255
F159	COMB1	0	-1313.57983	0.201485679	0.189262167	0.008722654	0.417878151	0.638371408

F159	COMB1	2	-1304.36377	0.201485679	0.189262167	0.008722654	0.039353862	0.235400096
F159	COMB1	4	-1295.14783	0.201485679	0.189262167	0.008722654	-0.33917046	-0.16757122
F159	COMB2	0	-904.766174	27.82552719	7.214106083	-0.03102805	15.35293007	62.05109406
F159	COMB2	2	-896.702209	27.82552719	7.214106083	-0.03102805	0.92471981	6.400043011
F159	COMB2	4	-888.638184	27.82552719	7.214106083	-0.03102805	-13.5034904	-49.2510109
F159	COMB3	0	-905.237061	8.543187141	22.48813248	-0.1123547	47.81217575	19.12986183
F159	COMB3	2	-897.173035	8.543187141	22.48813248	-0.1123547	2.835918427	2.043489933
F159	COMB3	4	-889.10907	8.543187141	22.48813248	-0.1123547	-42.1403389	-15.0428829
F160	D	0	-793.238647	0.066299975	0.136432484	-0.00376672	0.301686287	0.070719324
F160	D	2	-785.558655	0.066299975	0.136432484	-0.00376672	0.028821323	-0.06188061
F160	D	4	-777.878662	0.066299975	0.136432484	-0.00376672	-0.24404362	-0.19448057
F160	L	0	-227.67746	-0.0443187	0.016560227	-6.1129E-05	0.033118349	-0.05544497
F160	L	2	-227.67746	-0.0443187	0.016560227	-6.1129E-05	-2.0996E-06	0.03319243
F160	L	4	-227.67746	-0.0443187	0.016560227	-6.1129E-05	-0.03312255	0.12182983
F160	EX	0	-0.30274981	26.68276215	-0.39104074	-0.00191745	-0.83806163	59.39946747
F160	EX	2	-0.30274981	26.68276215	-0.39104074	-0.00191745	-0.05598029	6.03394556
F160	EX	4	-0.30274981	26.68276215	-0.39104074	-0.00191745	0.7261011	-47.3315773
F160	EY	0	-0.62106001	-6.7405E-05	21.15889549	0.112095743	44.97217178	-8.2917E-06
F160	EY	2	-0.62106001	-6.7405E-05	21.15889549	0.112095743	2.654385567	0.000126519
F160	EY	4	-0.62106001	-6.7405E-05	21.15889549	0.112095743	-39.6634026	0.00026133
F160	COMB1	0	-1316.17041	0.008650048	0.190215349	-0.00461787	0.415012896	-0.00384876
F160	COMB1	2	-1306.95435	0.008650048	0.190215349	-0.00461787	0.034582227	-0.02114885
F160	COMB1	4	-1297.7384	0.008650048	0.190215349	-0.00461787	-0.34584841	-0.03844895
F160	COMB2	0	-905.127991	27.67229271	6.408795834	0.029351283	13.62604332	61.53523636
F160	COMB2	2	-897.063965	27.67229271	6.408795834	0.029351283	0.80845356	6.190654755
F160	COMB2	4	-889	27.67229271	6.408795834	0.029351283	-12.0091362	-49.1539268
F160	COMB3	0	-905.366516	8.460654259	22.24213409	0.113122217	47.28399277	18.76761436
F160	COMB3	2	-897.30249	8.460654259	22.24213409	0.113122217	2.799732685	1.846306682
F160	COMB3	4	-889.238525	8.460654259	22.24213409	0.113122217	-41.6845284	-15.0749998
F161	D	0	-872.091431	-0.92886829	0.271490514	-0.00856229	0.434618115	-1.06260765
F161	D	2	-864.411438	-0.92886829	0.271490514	-0.00856229	-0.10836281	0.795128882
F161	D	4	-856.731445	-0.92886829	0.271490514	-0.00856229	-0.65134376	2.652865171
F161	L	0	-290.408478	-0.21942747	0.085569844	-0.00064764	0.115339987	-0.12681308
F161	L	2	-290.408478	-0.21942747	0.085569844	-0.00064764	-0.05579968	0.312041789
F161	L	4	-290.408478	-0.21942747	0.085569844	-0.00064764	-0.22693935	0.750896692
F161	EX	0	9.46231842	27.3012104	-0.40519017	0.043148614	-0.85808223	60.46112061
F161	EX	2	9.46231842	27.3012104	-0.40519017	0.043148614	-0.04770195	5.858710289
F161	EX	4	9.46231842	27.3012104	-0.40519017	0.043148614	0.762678325	-48.7437019
F161	EY	0	-0.55714536	-7.6622E-05	22.78082657	0.164294332	48.62060547	-1.0382E-05
F161	EY	2	-0.55714536	-7.6622E-05	22.78082657	0.164294332	3.058956385	0.000142863
F161	EY	4	-0.55714536	-7.6622E-05	22.78082657	0.164294332	-42.5026932	0.000296107
F161	COMB1	0	-1511.16333	-1.4657259	0.462700337	-0.01131097	0.706085742	-1.47803009
F161	COMB1	2	-1501.94727	-1.4657259	0.462700337	-0.01131097	-0.21931486	1.453421474
F161	COMB1	4	-1492.73132	-1.4657259	0.462700337	-0.01131097	-1.14471543	4.384872913
F161	COMB2	0	-997.556702	27.21229744	7.068608284	0.087217115	14.92005634	61.42157364
F161	COMB2	2	-989.492676	27.21229744	7.068608284	0.087217115	0.782841921	6.996988773
F161	COMB2	4	-981.428711	27.21229744	7.068608284	0.087217115	-13.3543739	-47.427597
F161	COMB3	0	-1004.77905	7.555369377	24.10425186	0.176906452	51.27402115	17.88955879
F161	COMB3	2	-996.715088	7.555369377	24.10425186	0.176906452	3.065520287	2.778822184
F161	COMB3	4	-988.651062	7.555369377	24.10425186	0.176906452	-45.1429825	-12.3319149
F162	D	0	-748.275085	8.104159355	0.225756258	-0.00192735	0.386390597	10.87360382
F162	D	2	-740.595093	8.104159355	0.225756258	-0.00192735	-0.0651219	-5.33471346
F162	D	4	-732.9151	8.104159355	0.225756258	-0.00192735	-0.51663435	-21.5430298
F162	L	0	-200.493637	2.634747744	0.067955613	0.000284175	0.090954237	3.266363859
F162	L	2	-200.493637	2.634747744	0.067955613	0.000284175	-0.04495697	-2.00313115
F162	L	4	-200.493637	2.634747744	0.067955613	0.000284175	-0.18086818	-7.27262592
F162	EX	0	-49.0232391	19.7916851	-0.42440292	0.051183239	-0.90684283	47.62922287
F162	EX	2	-49.0232391	19.7916851	-0.42440292	0.051183239	-0.05803708	8.045855522
F162	EX	4	-49.0232391	19.7916851	-0.42440292	0.051183239	0.790768743	-31.5375099
F162	EY	0	-0.56729257	6.44055E-05	23.80300331	0.058782216	50.81429672	0.000117868
F162	EY	2	-0.56729257	6.44055E-05	23.80300331	0.058782216	3.208294392	-1.0943E-05
F162	EY	4	-0.56729257	6.44055E-05	23.80300331	0.058782216	-44.3977127	-0.00013975
F162	COMB1	0	-1218.71997	13.94058704	0.379636496	-0.00185814	0.609195471	18.27450752
F162	COMB1	2	-1209.50391	13.94058704	0.379636496	-0.00185814	-0.15007742	-9.60666561
F162	COMB1	4	-1200.28796	13.94058704	0.379636496	-0.00185814	-0.90935034	-37.4878349
F162	COMB2	0	-899.762085	29.82372665	7.317139149	0.069556847	15.50228214	61.74246979
F162	COMB2	2	-891.69812	29.82372665	7.317139149	0.069556847	0.868004918	2.095021725
F162	COMB2	4	-883.634094	29.82372665	7.317139149	0.069556847	-13.7662725	-57.5524254
F162	COMB3	0	-864.882324	15.57376099	25.11791611	0.075909846	53.50371552	27.4495182
F162	COMB3	2	-856.818298	15.57376099	25.11791611	0.075909846	3.267888069	-3.6980021
F162	COMB3	4	-848.754333	15.57376099	25.11791611	0.075909846	-46.9679451	-34.84552
F163	D	0	-676.792053	-8.2940321	-0.73657149	0.011049561	-1.01465333	-11.145525
F163	D	2	-669.112	-8.2940321	-0.73657149	0.011049561	0.458489567	5.442537785
F163	D	4	-661.432007	-8.2940321	-0.73657149	0.011049561	1.9316324	22.0306015
F163	L	0	-109.36573	-2.63252592	-0.08333969	0.002565824	-0.01050632	-3.1683259
F163	L	2	-109.36573	-2.63252592	-0.08333969	0.002565824	0.15617305	2.096725225
F163	L	4	-109.36573	-2.63252592	-0.08333969	0.002565824	0.322852403	7.361776352
F163	EX	0	49.97111893	20.07188988	0.468156457	-0.00122095	0.968919456	48.28382111
F163	EX	2	49.97111893	20.07188988	0.468156457	-0.00122095	0.032606639	8.140041351
F163	EX	4	49.97111893	20.07188988	0.468156457	-0.00122095	-0.90370619	-32.0037346
F163	EY	0	6.185905457	-0.0006856	24.42464256	-0.05790975	51.82050705	-0.00065761
F163	EY	2	6.185905457	-0.0006856	24.42464256	-0.05790975	2.971225023	0.000713585
F163	EY	4	6.185905457	-0.0006856	24.42464256	-0.05790975	-45.8780594	0.002084778
F163	COMB1	0	-987.13562	-14.1648798	-1.01722932	0.017364793	-1.23439419	-18.4439507

F163	COMB1	2	-977.919556	-14.1648798	-1.01722932	0.017364793	0.800064385	9.885806084
F163	COMB1	4	-968.703552	-14.1648798	-1.01722932	0.017364793	2.834522724	38.21556091
F163	COMB2	0	-691.413208	11.23621178	7.378652096	-0.00709498	16.25759506	37.27272415
F163	COMB2	2	-683.349121	11.23621178	7.378652096	-0.00709498	1.500292301	14.8003006
F163	COMB2	4	-675.285156	11.23621178	7.378652096	-0.00709498	-13.2570114	-7.67211866
F163	COMB3	0	-722.845764	-3.21605372	24.9936924	-0.04877957	53.64804459	2.507888556
F163	COMB3	2	-714.781677	-3.21605372	24.9936924	-0.04877957	3.660665989	8.939995766
F163	COMB3	4	-706.717712	-3.21605372	24.9936924	-0.04877957	-46.3267174	15.37210274
F164	D	0	-890.973572	0.860247314	-0.77440178	0.010474534	-0.71542925	1.079486609
F164	D	2	-883.293579	0.860247314	-0.77440178	0.010474534	0.833374143	-0.64100784
F164	D	4	-875.613586	0.860247314	-0.77440178	0.010474534	2.382177591	-2.36150241
F164	L	0	-237.083282	0.141312227	-0.18302265	0.002424177	-0.07310633	0.105825648
F164	L	2	-237.083282	0.141312227	-0.18302265	0.002424177	0.292938948	-0.17679879
F164	L	4	-237.083282	0.141312227	-0.18302265	0.002424177	0.658984244	-0.45942324
F164	EX	0	-9.82442284	27.47089767	0.411246747	0.007769289	0.87063688	60.83019257
F164	EX	2	-9.82442284	27.47089767	0.411246747	0.007769289	0.048143491	5.88839674
F164	EX	4	-9.82442284	27.47089767	0.411246747	0.007769289	-0.77434993	-49.0533943
F164	EY	0	5.996162415	-0.00158534	23.36673737	-0.16640128	49.56861115	-0.00193497
F164	EY	2	5.996162415	-0.00158534	23.36673737	-0.16640128	2.835139513	0.001235722
F164	EY	4	5.996162415	-0.00158534	23.36673737	-0.16640128	-43.8983345	0.004406408
F164	COMB1	0	-1448.50159	1.258396387	-1.22211838	0.016448123	-0.97548521	1.46470499
F164	COMB1	2	-1439.28552	1.258396387	-1.22211838	0.016448123	1.468751311	-1.05208743
F164	COMB1	4	-1430.06958	1.258396387	-1.22211838	0.016448123	3.912987947	-3.56888008
F164	COMB2	0	-1018.48297	29.37965393	6.915389061	-0.03261331	15.74099255	64.12543488
F164	COMB2	2	-1010.41901	29.37965393	6.915389061	-0.03261331	1.910216093	5.366130352
F164	COMB2	4	-1002.35498	29.37965393	6.915389061	-0.03261331	-11.9205608	-53.3931694
F164	COMB3	0	-1007.0022	9.599441528	23.79384422	-0.16051215	51.54706573	20.32627487
F164	COMB3	2	-998.938232	9.599441528	23.79384422	-0.16051215	3.959380388	1.12739265
F164	COMB3	4	-990.874207	9.599441528	23.79384422	-0.16051215	-43.6283035	-18.0714893
F165	D	0	-813.874878	0.079821914	-0.71522999	0.006554917	-0.55117732	0.260979652
F165	D	2	-806.194885	0.079821914	-0.71522999	0.006554917	0.879282475	0.101335831
F165	D	4	-798.514893	0.079821914	-0.71522999	0.006554917	2.309742212	-0.05830799
F165	L	0	-231.255783	0.060067408	-0.17107086	0.001362449	-0.04327766	0.178755239
F165	L	2	-231.255783	0.060067408	-0.17107086	0.001362449	0.298864007	0.058620434
F165	L	4	-231.255783	0.060067408	-0.17107086	0.001362449	0.641005635	-0.06151437
F165	EX	0	-0.14720058	26.64138031	0.394444674	-0.03946076	0.838629663	59.31302643
F165	EX	2	-0.14720058	26.64138031	0.394444674	-0.03946076	0.04974037	6.030271053
F165	EX	4	-0.14720058	26.64138031	0.394444674	-0.03946076	-0.73914891	-47.2524834
F165	EY	0	5.693891525	-0.0011768	21.64070892	-0.11468043	45.75206757	-0.00145919
F165	EY	2	5.693891525	-0.0011768	21.64070892	-0.11468043	2.47065258	0.000894417
F165	EY	4	5.693891525	-0.0011768	21.64070892	-0.11468043	-40.8107643	0.003248022
F165	COMB1	0	-1346.65918	0.191894144	-1.13198936	0.010045819	-0.73065704	0.599183977
F165	COMB1	2	-1337.44312	0.191894144	-1.13198936	0.010045819	1.533321381	0.215395689
F165	COMB1	4	-1328.22717	0.191894144	-1.13198936	0.010045819	3.797299623	-0.16839258
F165	COMB2	0	-925.77301	27.67619324	6.420194626	-0.06965439	14.68751431	61.71886063
F165	COMB2	2	-917.708984	27.67619324	6.420194626	-0.06965439	1.847125649	6.36648035
F165	COMB2	4	-909.64502	27.67619324	6.420194626	-0.06965439	-10.9932632	-48.9859009
F165	COMB3	0	-921.481995	8.493533134	22.04211617	-0.12553276	47.71147156	19.0124073
F165	COMB3	2	-913.417969	8.493533134	22.04211617	-0.12553276	3.627242327	2.025342464
F165	COMB3	4	-905.354004	8.493533134	22.04211617	-0.12553276	-40.4569855	-14.9617224
F166	D	0	-813.273926	0.059573743	-0.71709532	-0.00634626	-0.55494851	0.063889392
F166	D	2	-805.593933	0.059573743	-0.71709532	-0.00634626	0.879241943	-0.05525808
F166	D	4	-797.91394	0.059573743	-0.71709532	-0.00634626	2.313432217	-0.17440556
F166	L	0	-233.528656	-0.05520157	-0.17795217	-0.00041831	-0.04895633	-0.07508677
F166	L	2	-233.528656	-0.05520157	-0.17795217	-0.00041831	0.306948006	0.035316356
F166	L	4	-233.528656	-0.05520157	-0.17795217	-0.00041831	0.662852347	0.145719483
F166	EX	0	-0.1392267	26.54283142	-0.4004969	-0.03937255	-0.85132676	59.0992775
F166	EX	2	-0.1392267	26.54283142	-0.4004969	-0.03937255	-0.05033303	6.01362133
F166	EX	4	-0.1392267	26.54283142	-0.4004969	-0.03937255	0.750660658	-47.0720367
F166	EY	0	5.693890095	0.001175732	21.6407299	0.114684001	45.75208282	0.001456789
F166	EY	2	5.693890095	0.001175732	21.6407299	0.114684001	2.470625877	-0.00089467
F166	EY	4	5.693890095	0.001175732	21.6407299	0.114684001	-40.810833	-0.00324614
F166	COMB1	0	-1349.57458	-0.01683402	-1.1452378	-0.00828482	-0.74426836	-0.04347157
F166	COMB1	2	-1340.35852	-0.01683402	-1.1452378	-0.00828482	1.54620707	-0.00980353
F166	COMB1	4	-1331.14258	-0.01683402	-1.1452378	-0.00828482	3.836682558	0.023864504
F166	COMB2	0	-925.84967	27.5173645	5.593310833	-0.01142048	12.93266582	61.21164322
F166	COMB2	2	-917.785706	27.5173645	5.593310833	-0.01142048	1.746045113	6.176919937
F166	COMB2	4	-909.72168	27.5173645	5.593310833	-0.01142048	-9.4405756	-48.8578033
F166	COMB3	0	-921.564453	8.407390594	21.78760529	0.101220503	47.17340469	18.6612339
F166	COMB3	2	-913.500427	8.407390594	21.78760529	0.101220503	3.598195076	1.846454978
F166	COMB3	4	-905.436462	8.407390594	21.78760529	0.101220503	-39.9770126	-14.9683237
F167	D	0	-893.770752	-0.91691405	-0.78480023	-0.00961145	-0.72515404	-1.06812584
F167	D	2	-886.090759	-0.91691405	-0.78480023	-0.00961145	0.844446182	0.765702128
F167	D	4	-878.410767	-0.91691405	-0.78480023	-0.00961145	2.414046526	2.59953022
F167	L	0	-298.621918	-0.21992409	-0.25158963	-0.00126093	-0.11888536	-0.13434033
F167	L	2	-298.621918	-0.21992409	-0.25158963	-0.00126093	0.384293884	0.305507809
F167	L	4	-298.621918	-0.21992409	-0.25158963	-0.00126093	0.887473106	0.745355904
F167	EX	0	9.435193062	27.15681267	-0.4127478	0.006551618	-0.87351984	60.15142822
F167	EX	2	9.435193062	27.15681267	-0.4127478	0.006551618	-0.04802432	5.837806225
F167	EX	4	9.435193062	27.15681267	-0.4127478	0.006551618	0.777471185	-48.475811
F167	EY	0	5.996163845	0.001584225	23.3667717	0.166400567	49.56867599	0.001932497
F167	EY	2	5.996163845	0.001584225	23.3667717	0.166400567	2.835137844	-0.00123595
F167	EY	4	5.996163845	0.001584225	23.3667717	0.166400567	-43.8984032	-0.0044044
F167	COMB1	0	-1550.31995	-1.45217538	-1.34430373	-0.01355122	-1.06040144	-1.49669552

F171	COMB1	2	-909.87793	0.179843023	18.99840546	0.021231188	-13.1093292	0.125675857
F171	COMB1	4	-900.661987	0.179843023	18.99840546	0.021231188	-51.1061401	-0.23401016
F171	COMB2	0	-657.032471	27.38539696	18.4001236	-0.11533777	29.53570938	61.33180618
F171	COMB2	2	-648.968445	27.38539696	18.4001236	-0.11533777	-7.26453543	6.561015129
F171	COMB2	4	-640.90448	27.38539696	18.4001236	-0.11533777	-44.0647774	-48.209774
F171	COMB3	0	-680.067932	8.40644455	29.85502243	-0.19243394	55.36265182	18.84880829
F171	COMB3	2	-672.003906	8.40644455	29.85502243	-0.19243394	-4.34739208	2.035921335
F171	COMB3	4	-663.93988	8.40644455	29.85502243	-0.19243394	-64.0574341	-14.7769661
F172	D	0	-571.903503	0.082018204	11.50865078	-0.01424922	15.58020687	0.172662616
F172	D	2	-564.223511	0.082018204	11.50865078	-0.01424922	-7.4370923	0.008626213
F172	D	4	-556.543518	0.082018204	11.50865078	-0.01424922	-30.4543934	-0.15541019
F172	L	0	-146.242813	0.009645337	3.278115988	-0.00295915	3.902190447	0.038843401
F172	L	2	-146.242813	0.009645337	3.278115988	-0.00295915	-2.65404105	0.019552728
F172	L	4	-146.242813	0.009645337	3.278115988	-0.00295915	-9.21027184	0.000262057
F172	EX	0	0.147338063	26.26463318	-0.28748664	-0.04745442	-0.66599792	58.79525757
F172	EX	2	0.147338063	26.26463318	-0.28748664	-0.04745442	-0.0910247	6.266002178
F172	EX	4	0.147338063	26.26463318	-0.28748664	-0.04745442	0.483948559	-46.2632561
F172	EY	0	-31.7665539	-0.01143478	15.8624897	0.175949082	35.78121185	-0.02298879
F172	EY	2	-31.7665539	-0.01143478	15.8624897	0.175949082	4.056237698	-0.00011924
F172	EY	4	-31.7665539	-0.01143478	15.8624897	0.175949082	-27.6687374	0.022750316
F172	COMB1	0	-920.272705	0.113854386	19.05536652	-0.02183372	24.93975258	0.269344568
F172	COMB1	2	-911.056763	0.113854386	19.05536652	-0.02183372	-13.1709766	0.041635823
F172	COMB1	4	-901.840759	0.113854386	19.05536652	-0.02183372	-51.2817078	-0.18607293
F172	COMB2	0	-656.419128	27.26945114	17.81582451	-0.00958519	28.17018127	61.03938293
F172	COMB2	2	-648.355164	27.26945114	17.81582451	-0.00958519	-7.46146536	6.500491142
F172	COMB2	4	-640.291138	27.26945114	17.81582451	-0.00958519	-43.0931129	-48.0384026
F172	COMB3	0	-679.873657	8.350510597	29.68174553	0.153904572	54.94889069	18.68989944
F172	COMB3	2	-671.809631	8.350510597	29.68174553	0.153904572	-4.41459274	1.988882065
F172	COMB3	4	-663.745667	8.350510597	29.68174553	0.153904572	-63.77808	-14.7121363
F173	D	0	-627.880493	-0.59691715	11.89670181	-0.01916059	16.14306831	-0.80435961
F173	D	2	-620.2005	-0.59691715	11.89670181	-0.01916059	-7.65033197	0.389474541
F173	D	4	-612.520508	-0.59691715	11.89670181	-0.01916059	-31.4437351	1.583308697
F173	L	0	-178.551865	-0.11611988	4.36630106	-0.00659253	5.203279495	-0.00503773
F173	L	2	-178.551865	-0.11611988	4.36630106	-0.00659253	-3.52932167	0.227201998
F173	L	4	-178.551865	-0.11611988	4.36630106	-0.00659253	-12.2619228	0.459441721
F173	EX	0	9.091884613	26.85684395	-0.36200649	0.03580977	-0.75459069	59.81022644
F173	EX	2	9.091884613	26.85684395	-0.36200649	0.03580977	-0.03057778	6.096544266
F173	EX	4	9.091884613	26.85684395	-0.36200649	0.03580977	0.693435133	-47.6171379
F173	EY	0	-35.3215446	-0.02013352	17.01913452	0.251179934	38.69877625	-0.04195036
F173	EY	2	-35.3215446	-0.02013352	17.01913452	0.251179934	4.660509586	-0.00168333
F173	EY	4	-35.3215446	-0.02013352	17.01913452	0.251179934	-29.3777542	0.038583703
F173	COMB1	0	-1039.13953	-0.9020924	21.26212311	-0.03354076	27.69692993	-0.97329187
F173	COMB1	2	-1029.92358	-0.9020924	21.26212311	-0.03354076	-14.8273125	0.830892682
F173	COMB1	4	-1020.70758	-0.9020924	21.26212311	-0.03354076	-57.3515587	2.635077238
F173	COMB2	0	-717.234558	27.12715149	18.85327148	0.093989521	29.99836922	61.04420471
F173	COMB2	2	-709.170532	27.12715149	18.85327148	0.093989521	-7.70817232	6.78990984
F173	COMB2	4	-701.106567	27.12715149	18.85327148	0.093989521	-45.4147148	-47.464386
F173	COMB3	0	-749.742004	7.775424957	31.62298012	0.25282374	58.98527527	17.95000839
F173	COMB3	2	-741.67804	7.775424957	31.62298012	0.25282374	-4.26068163	2.399160862
F173	COMB3	4	-733.614014	7.775424957	31.62298012	0.25282374	-67.5066376	-13.1516867
F174	D	0	-471.751923	8.414066315	13.17700768	-0.03285021	20.65527725	13.384758
F174	D	2	-464.071899	8.414066315	13.17700768	-0.03285021	-5.69873714	-3.44337273
F174	D	4	-456.391907	8.414066315	13.17700768	-0.03285021	-32.0527534	-20.2715034
F174	L	0	-113.586494	2.132910252	3.275105476	-0.01341155	3.887654781	2.642761469
F174	L	2	-113.586494	2.132910252	3.275105476	-0.01341155	-2.66255522	-1.62305892
F174	L	4	-113.586494	2.132910252	3.275105476	-0.01341155	-9.21276569	-5.8888793
F174	EX	0	-46.8892059	19.3495388	-0.15150389	0.058547381	-0.52637351	47.0318985
F174	EX	2	-46.8892059	19.3495388	-0.15150389	0.058547381	-0.22336572	8.3328228
F174	EX	4	-46.8892059	19.3495388	-0.15150389	0.058547381	0.079642043	-30.366251
F174	EY	0	-36.4101753	-0.011868	17.77843666	0.096055314	40.45111847	-0.02856985
F174	EY	2	-36.4101753	-0.011868	17.77843666	0.096055314	4.894243717	-0.00483385
F174	EY	4	-36.4101753	-0.011868	17.77843666	0.096055314	-30.6626301	0.01890214
F174	COMB1	0	-747.840698	13.50953674	21.05257797	-0.06087874	31.00658035	20.29012871
F174	COMB1	2	-738.624695	13.50953674	21.05257797	-0.06087874	-11.0985727	-6.72894144
F174	COMB1	4	-729.408691	13.50953674	21.05257797	-0.06087874	-53.2037277	-33.7480125
F174	COMB2	0	-591.118774	29.52967072	20.3109169	0.052136607	35.10995865	63.55548096
F174	COMB2	2	-583.05481	29.52967072	20.3109169	0.052136607	-5.51187563	4.496144295
F174	COMB2	4	-574.990784	29.52967072	20.3109169	0.052136607	-46.133709	-54.5631905
F174	COMB3	0	-584.120056	15.58928013	33.4871521	0.080583148	65.22052002	29.67151451
F174	COMB3	2	-576.05603	15.58928013	33.4871521	0.080583148	-1.75378311	-1.5070411
F174	COMB3	4	-567.992065	15.58928013	33.4871521	0.080583148	-68.7280807	-32.6855965
F175	D	0	-73.727272	-0.78980219	-0.59666216	-0.02822021	-1.8314445	-2.28495026
F175	D	2.730000019	-63.2440758	-0.78980219	-0.59666216	-0.02822021	-0.20255703	-0.12879053
F175	D	5.460000038	-52.7608757	-0.78980219	-0.59666216	-0.02822021	1.426330328	2.027369261
F175	L	0	-1.32708371	0.02522382	-0.15467957	-0.01295898	-0.38823566	0.075005643
F175	L	2.730000019	-1.32708371	0.02522382	-0.15467957	-0.01295898	0.034039512	0.006144623
F175	L	5.460000038	-1.32708371	0.02522382	-0.15467957	-0.01295898	0.456314683	-0.06271639
F175	EX	0	15.36324883	7.15600729	1.008137465	-2.20884919	2.559818029	20.59417152
F175	EX	2.730000019	15.36324883	7.15600729	1.008137465	-2.20884919	-0.19239683	1.058275461
F175	EX	5.460000038	15.36324883	7.15600729	1.008137465	-2.20884919	-2.94461179	-18.4776211
F175	EY	0	0.893036008	-4.7365E-05	10.60213375	0.014908857	33.28924942	-0.00122284
F175	EY	2.730000019	0.893036008	-4.7365E-05	10.60213375	0.014908857	4.345430374	-0.00109353
F175	EY	5.460000038	0.893036008	-4.7365E-05	10.60213375	0.014908857	-24.5983925	-0.00096423
F175	COMB1	0	-90.5960617	-0.90740448	-0.9634819	-0.05459863	-2.81891036	-2.62193131

F178	COMB1	0	-3.22306156	-12.2045507	-0.00040388	-0.34975755	-0.00531193	-7.13057756
F178	COMB1	1.25	-3.22306156	-6.26455069	-0.00040388	-0.34975755	-0.00480707	4.412610531
F178	COMB1	2.5	-3.22306156	-0.32455006	-0.00040388	-0.34975755	-0.00430222	8.530797958
F178	COMB1	3.75	-3.22306156	5.615450382	-0.00040388	-0.34975755	-0.00379737	5.223985672
F178	COMB1	5	-3.22306156	11.55544949	-0.00040388	-0.34975755	-0.00329251	-5.50782728
F178	COMB2	0	5.86875391	-3.0803194	0.232095644	0.149249062	0.914484441	10.84705162
F178	COMB2	1.25	5.86875391	2.117180586	0.232095644	0.149249062	0.624364913	11.4490118
F178	COMB2	2.5	5.86875391	7.314681053	0.232095644	0.149249062	0.334245324	5.554098129
F178	COMB2	3.75	5.86875391	12.51218128	0.232095644	0.149249062	0.044125773	-6.83769083
F178	COMB2	5	5.86875391	17.70968056	0.232095644	0.149249062	-0.24599379	-25.7263565
F178	COMB3	0	21.9643631	11.12839127	0.06894765	-0.16858789	0.273238122	42.63679123
F178	COMB3	1.25	21.9643631	16.32589149	0.06894765	-0.16858789	0.187053561	25.47786331
F178	COMB3	2.5	21.9643631	21.52339172	0.06894765	-0.16858789	0.100868985	1.822059393
F178	COMB3	3.75	21.9643631	26.72089195	0.06894765	-0.16858789	0.014684416	-28.3306179
F178	COMB3	5	21.9643631	31.91839218	0.06894765	-0.16858789	-0.07150015	-64.9801712
F179	D	0	-2.62904	-10.1109524	0.002928126	0.296686888	0.014083891	-5.81795883
F179	D	1.25	-2.62904	-5.16095304	0.002928126	0.296686888	0.010423732	3.726982594
F179	D	2.5	-2.62904	-0.21095288	0.002928126	0.296686888	0.006763575	7.084423542
F179	D	3.75	-2.62904	4.73904705	0.002928126	0.296686888	0.003103416	4.254364491
F179	D	5	-2.62904	9.68904686	0.002928126	0.296686888	-0.00055674	-4.76319456
F179	L	0	-0.06454321	-0.06149407	-0.00073071	0.00152527	-8.1698E-05	-0.13139357
F179	L	1.25	-0.06454321	-0.06149407	-0.00073071	0.00152527	0.000831689	-0.05452597
F179	L	2.5	-0.06454321	-0.06149407	-0.00073071	0.00152527	0.001745076	0.022341622
F179	L	3.75	-0.06454321	-0.06149407	-0.00073071	0.00152527	0.002658464	0.099209219
F179	L	5	-0.06454321	-0.06149407	-0.00073071	0.00152527	0.003571851	0.1760768
F179	EX	0	-1.30255377	-1.09045935	0.224512592	0.44147715	0.888641417	-2.50832701
F179	EX	1.25	-1.30255377	-1.09045935	0.224512592	0.44147715	0.608000696	-1.14525282
F179	EX	2.5	-1.30255377	-1.09045935	0.224512592	0.44147715	0.327359915	0.217821389
F179	EX	3.75	-1.30255377	-1.09045935	0.224512592	0.44147715	0.046719179	1.580895543
F179	EX	5	-1.30255377	-1.09045935	0.224512592	0.44147715	-0.23392157	2.943969727
F179	EY	0	23.1671505	20.39313889	0.001564629	-2.9271E-05	0.001554864	45.69361496
F179	EY	1.25	23.1671505	20.39313889	0.001564629	-2.9271E-05	-0.00040092	20.20219421
F179	EY	2.5	23.1671505	20.39313889	0.001564629	-2.9271E-05	-0.00235671	-5.28922796
F179	EY	3.75	23.1671505	20.39313889	0.001564629	-2.9271E-05	-0.0043125	-30.7806511
F179	EY	5	23.1671505	20.39313889	0.001564629	-2.9271E-05	-0.00626828	-56.2720718
F179	COMB1	0	-3.2581172	-12.231534	0.002344616	0.358464688	0.016769951	-7.19178057
F179	COMB1	1.25	-3.2581172	-6.29153395	0.002344616	0.358464688	0.013839182	4.385137558
F179	COMB1	2.5	-3.2581172	-0.35153398	0.002344616	0.358464688	0.010908412	8.537055016
F179	COMB1	3.75	-3.2581172	5.588466167	0.002344616	0.358464688	0.007977641	5.263972282
F179	COMB1	5	-3.2581172	11.52846622	0.002344616	0.358464688	0.005046871	-5.43411064
F179	COMB2	0	3.16868639	-5.34065819	0.235707745	0.768921316	0.934996009	5.647124767
F179	COMB2	1.25	3.16868639	-0.14315802	0.235707745	0.768921316	0.640361309	9.074510574
F179	COMB2	2.5	3.16868639	5.054341793	0.235707745	0.768921316	0.345726609	6.005020618
F179	COMB2	3.75	3.16868639	10.25184155	0.235707745	0.768921316	0.051091917	-3.56134462
F179	COMB2	5	3.16868639	15.44934177	0.235707745	0.768921316	-0.24354279	-19.6245842
F179	COMB3	0	21.13438034	10.43342972	0.075208686	0.451036274	0.296317011	41.03792953
F179	COMB3	1.25	21.13438034	15.63092899	0.075208686	0.451036274	0.202306151	24.74770546
F179	COMB3	2.5	21.13438034	20.82843018	0.075208686	0.451036274	0.108295284	1.960606575
F179	COMB3	3.75	21.13438034	26.0259285	0.075208686	0.451036274	0.014284424	-27.3233681
F179	COMB3	5	21.13438034	31.22342873	0.075208686	0.451036274	-0.07972644	-63.1042175
F180	D	0	6.091258526	-9.91347218	-0.00357901	0.000802755	-0.02563651	-7.16525316
F180	D	1.25	6.091258526	-4.96347189	-0.00357901	0.000802755	-0.02116275	2.132837772
F180	D	2.5	6.091258526	-0.01347216	-0.00357901	0.000802755	-0.01668898	5.24342823
F180	D	3.75	6.091258526	4.936528206	-0.00357901	0.000802755	-0.01221521	2.166517973
F180	D	5	6.091258526	9.886528015	-0.00357901	0.000802755	-0.00774145	-7.09789181
F180	L	0	0.001237969	-0.01162974	-0.00166192	0.002104648	-0.0050137	-0.02911726
F180	L	1.25	0.001237969	-0.01162974	-0.00166192	0.002104648	-0.00293629	-0.01458009
F180	L	2.5	0.001237969	-0.01162974	-0.00166192	0.002104648	-0.00085889	-4.291E-05
F180	L	3.75	0.001237969	-0.01162974	-0.00166192	0.002104648	0.001218519	0.014494265
F180	L	5	0.001237969	-0.01162974	-0.00166192	0.002104648	0.003295925	0.029031442
F180	EX	0	0.000274859	-3.61411142	-0.84304398	0.334244549	-2.10824633	-9.03531551
F180	EX	1.25	0.000274859	-3.61411142	-0.84304398	0.334244549	-1.05444145	-4.51767635
F180	EX	2.5	0.000274859	-3.61411142	-0.84304398	0.334244549	-0.00063637	-3.7068E-05
F180	EX	3.75	0.000274859	-3.61411142	-0.84304398	0.334244549	1.053168654	4.517602444
F180	EX	5	0.000274859	-3.61411142	-0.84304398	0.334244549	2.106973648	9.035242081
F180	EY	0	-0.0027299	-8.3624E-06	-3.0383E-05	1.77674E-05	0.003584869	0.000173468
F180	EY	1.25	-0.0027299	-8.3624E-06	-3.0383E-05	1.77674E-05	0.003622848	0.000183921
F180	EY	2.5	-0.0027299	-8.3624E-06	-3.0383E-05	1.77674E-05	0.003660828	0.000194374
F180	EY	3.75	-0.0027299	-8.3624E-06	-3.0383E-05	1.77674E-05	0.003698807	0.000204827
F180	EY	5	-0.0027299	-8.3624E-06	-3.0383E-05	1.77674E-05	0.003736786	0.00021528
F180	COMB1	0	7.311491013	-11.9147739	-0.0069539	0.004330742	-0.03878574	-8.64489079
F180	COMB1	1.25	7.311491013	-5.97477388	-0.0069539	0.004330742	-0.03009337	2.536077261
F180	COMB1	2.5	7.311491013	-0.03477418	-0.0069539	0.004330742	-0.021401	6.292045116
F180	COMB1	3.75	7.311491013	5.905226231	-0.0069539	0.004330742	-0.01270863	2.623012543
F180	COMB1	5	7.311491013	11.84522629	-0.0069539	0.004330742	-0.00401626	-8.47101974
F180	COMB2	0	6.395636082	-14.1534166	-0.8768416	0.347454548	-2.20940351	-16.8841839
F180	COMB2	1.25	6.395636082	-8.95591736	-0.8768416	0.347454548	-1.11335146	-2.44085026
F180	COMB2	2.5	6.395636082	-3.75841713	-0.8768416	0.347454548	-0.01729946	5.505609035
F180	COMB2	3.75	6.395636082	1.439083099	-0.8768416	0.347454548	1.078752518	6.955192566
F180	COMB2	5	6.395636082	6.636582851	-0.8768416	0.347454548	2.174804449	1.907901287
F180	COMB3	0	6.393431664	-11.5512629	-0.26987225	0.106811546	-0.68883115	-10.3786297
F180	COMB3	1.25	6.393431664	-6.3537631	-0.26987225	0.106811546	-0.35149086	0.812011957
F180	COMB3	2.5	6.393431664	-1.15626299	-0.26987225	0.106811546	-0.01415057	5.505778313
F180	COMB3	3.75	6.393431664	4.041237354	-0.26987225	0.106811546	0.323189735	3.702669382

F180	COMB3	5	6.393431664	9.238737106	-0.26987225	0.106811546	0.660530031	-4.59731436
F181	D	0	3.941632032	-47.7998924	0.040550329	-0.57983047	0.09807279	-33.8134575
F181	D	1.25	3.941632032	-26.0545788	0.040550329	-0.57983047	0.047384877	13.42794514
F181	D	2.5	3.941632032	2.756359816	0.040550329	-0.57983047	-0.00330304	28.10189819
F181	D	3.75	3.941632032	31.56729889	0.040550329	-0.57983047	-0.05399096	6.537045002
F181	D	5	3.941632032	53.31261444	0.040550329	-0.57983047	-0.10467888	-47.5952568
F181	L	0	1.146692753	-6.02228403	-0.0007236	-0.43853468	-0.01162436	-4.27947044
F181	L	1.25	1.146692753	-4.06915903	-0.0007236	-0.43853468	-0.01071987	2.43458271
F181	L	2.5	1.146692753	0.54021585	-0.0007236	-0.43853468	-0.00981537	4.682490349
F181	L	3.75	1.146692753	5.149591446	-0.0007236	-0.43853468	-0.00891088	1.084043026
F181	L	5	1.146692753	7.102715969	-0.0007236	-0.43853468	-0.00800639	-6.98055029
F181	EX	0	-20.0206909	18.40423584	-0.15047942	-0.05596684	-0.44415027	48.9682045
F181	EX	1.25	-20.0206909	18.40423584	-0.15047942	-0.05596684	-0.256051	25.96291161
F181	EX	2.5	-20.0206909	18.40423584	-0.15047942	-0.05596684	-0.06795171	2.957616091
F181	EX	3.75	-20.0206909	18.40423584	-0.15047942	-0.05596684	0.120147571	-20.047678
F181	EX	5	-20.0206909	18.40423584	-0.15047942	-0.05596684	0.308246851	-43.0529747
F181	EY	0	0.214419767	0.002834297	0.132343739	0.126545936	0.434811562	-0.02032335
F181	EY	1.25	0.214419767	0.002834297	0.132343739	0.126545936	0.269381881	-0.02386623
F181	EY	2.5	0.214419767	0.002834297	0.132343739	0.126545936	0.103952192	-0.0274091
F181	EY	3.75	0.214419767	0.002834297	0.132343739	0.126545936	-0.06147749	-0.03095197
F181	EY	5	0.214419767	0.002834297	0.132343739	0.126545936	-0.22690716	-0.03449484
F181	COMB1	0	6.564666748	-66.9955215	0.047502644	-1.39745212	0.099088371	-47.4233017
F181	COMB1	1.25	6.564666748	-37.7761497	0.047502644	-1.39745212	0.039710063	20.00886726
F181	COMB1	2.5	6.564666748	4.171977043	0.047502644	-1.39745212	-0.01966825	41.2142601
F181	COMB1	3.75	6.564666748	46.12010574	0.047502644	-1.39745212	-0.07904655	9.578923225
F181	COMB1	5	6.564666748	75.33948517	0.047502644	-1.39745212	-0.13842487	-68.2831879
F181	COMB2	0	-16.1539516	-33.0376282	-0.071708	-0.76502413	-0.22341514	13.82352543
F181	COMB2	1.25	-16.1539516	-9.58981609	-0.071708	-0.76502413	-0.13378012	41.73033142
F181	COMB2	2.5	-16.1539516	22.11362267	-0.071708	-0.76502413	-0.04414511	34.03447723
F181	COMB2	3.75	-16.1539516	53.81706238	-0.071708	-0.76502413	0.045489896	-13.5537262
F181	COMB2	5	-16.1539516	77.26487732	-0.071708	-0.76502413	0.135124907	-96.7445908
F181	COMB3	0	-1.58145535	-46.2865944	0.133909836	-0.63171679	0.415959567	-21.4485188
F181	COMB3	1.25	-1.58145535	-22.8387814	0.133909836	-0.63171679	0.248572275	23.0194931
F181	COMB3	2.5	-1.58145535	8.864656448	0.133909836	-0.63171679	0.081184983	31.88484573
F181	COMB3	3.75	-1.58145535	40.56809616	0.133909836	-0.63171679	-0.08620231	0.857852638
F181	COMB3	5	-1.58145535	64.01590729	0.133909836	-0.63171679	-0.2535896	-65.7717972
F182	D	0	3.539208651	-50.0190201	-0.02352785	0.016855758	-0.05928025	-44.3522224
F182	D	1.25	3.539208651	-28.2737083	-0.02352785	0.016855758	-0.02987044	5.66309309
F182	D	2.5	3.539208651	0.537229002	-0.02352785	0.016855758	-0.00046063	23.11096001
F182	D	3.75	3.539208651	29.34816551	-0.02352785	0.016855758	0.028949179	4.320020199
F182	D	5	3.539208651	51.09347916	-0.02352785	0.016855758	0.058358993	-47.0383682
F182	L	0	1.068239689	-6.36972952	-0.02083244	0.000377331	-0.05202711	-6.2614913
F182	L	1.25	1.068239689	-4.41660452	-0.02083244	0.000377331	-0.02598656	0.886869073
F182	L	2.5	1.068239689	0.192770645	-0.02083244	0.000377331	5.39959E-05	3.569083214
F182	L	3.75	1.068239689	4.802145958	-0.02083244	0.000377331	0.026094548	0.404942453
F182	L	5	1.068239689	6.755270958	-0.02083244	0.000377331	0.052135102	-7.22534418
F182	EX	0	-16.8806076	15.60175228	-0.64802724	-0.05548741	-1.15736949	38.85957336
F182	EX	1.25	-16.8806076	15.60175228	-0.64802724	-0.05548741	-0.3473354	19.35738564
F182	EX	2.5	-16.8806076	15.60175228	-0.64802724	-0.05548741	0.462698698	-0.1448058
F182	EX	3.75	-16.8806076	15.60175228	-0.64802724	-0.05548741	1.272732735	-19.6469975
F182	EX	5	-16.8806076	15.60175228	-0.64802724	-0.05548741	2.082766771	-39.149189
F182	EY	0	0.890413821	-0.16485001	0.365688354	0.181254625	0.847288847	-0.42071635
F182	EY	1.25	0.890413821	-0.16485001	0.365688354	0.181254625	0.390178412	-0.2146538
F182	EY	2.5	0.890413821	-0.16485001	0.365688354	0.181254625	-0.06693203	-0.00859127
F182	EY	3.75	0.890413821	-0.16485001	0.365688354	0.181254625	-0.52404249	0.197471261
F182	EY	5	0.890413821	-0.16485001	0.365688354	0.181254625	-0.98115289	0.403533787
F182	COMB1	0	5.956233978	-70.2143936	-0.06156532	0.020830639	-0.15437968	-63.2410507
F182	COMB1	1.25	5.956233978	-40.995018	-0.06156532	0.020830639	-0.07742302	8.214702606
F182	COMB1	2.5	5.956233978	0.953107834	-0.06156532	0.020830639	-0.00046637	33.44368362
F182	COMB1	3.75	5.956233978	42.90123367	-0.06156532	0.020830639	0.07649029	5.831932068
F182	COMB1	5	5.956233978	72.12060547	-0.06156532	0.020830639	0.153446957	-68.0065918
F182	COMB2	0	-13.1382837	-38.4305496	-0.58678281	0.017483139	-1.00961423	-8.45506763
F182	COMB2	1.25	-13.1382837	-14.9827394	-0.58678281	0.017483139	-0.27613565	26.19289017
F182	COMB2	2.5	-13.1382837	16.72069931	-0.58678281	0.017483139	0.457342893	25.23818779
F182	COMB2	3.75	-13.1382837	48.42413712	-0.58678281	0.017483139	1.190821409	-15.608861
F182	COMB2	5	-13.1382837	71.87194824	-0.58678281	0.017483139	1.924299955	-92.0585709
F182	COMB3	0	-0.32979202	-49.784977	0.148577735	0.19065623	0.446449101	-36.743187
F182	COMB3	1.25	-0.32979202	-26.3371658	0.148577735	0.19065623	0.260726959	12.09780121
F182	COMB3	2.5	-0.32979202	5.366272449	0.148577735	0.19065623	0.075004801	25.33613396
F182	COMB3	3.75	-0.32979202	37.06970978	0.148577735	0.19065623	-0.11071737	-1.31788123
F182	COMB3	5	-0.32979202	60.5175209	0.148577735	0.19065623	-0.2964395	-63.5745544
F183	D	0	1.820423841	-50.5012131	-0.00259887	0.001633596	0.033147853	-44.9539642
F183	D	1.25	1.820423841	-28.7558994	-0.00259887	0.001633596	0.036396444	5.66409111
F183	D	2.5	1.820423841	0.055037271	-0.00259887	0.001633596	0.039645039	23.71469688
F183	D	3.75	1.820423841	28.86597633	-0.00259887	0.001633596	0.042893633	5.526498318
F183	D	5	1.820423841	50.61128998	-0.00259887	0.001633596	0.046142228	-45.2291489
F183	L	0	0.531926334	-6.48984337	-0.002885	-0.00940487	-0.00503054	-6.40915346
F183	L	1.25	0.531926334	-4.53671885	-0.002885	-0.00940487	-0.0014243	0.889349043
F183	L	2.5	0.531926334	0.072656721	-0.002885	-0.00940487	0.002181952	3.721705437
F183	L	3.75	0.531926334	4.682032108	-0.002885	-0.00940487	0.005788201	0.707707226
F183	L	5	0.531926334	6.635157108	-0.002885	-0.00940487	0.009394448	-6.7724371
F183	EX	0	-11.9890461	15.68182945	-0.84706861	0.243567988	-2.11277986	39.23115921
F183	EX	1.25	-11.9890461	15.68182945	-0.84706861	0.243567988	-1.05394411	19.62887001
F183	EX	2.5	-11.9890461	15.68182945	-0.84706861	0.243567988	0.004891717	0.026582239

F183	EX	3.75	-11.9890461	15.68182945	-0.84706861	0.243567988	1.063727617	-19.5757046
F183	EX	5	-11.9890461	15.68182945	-0.84706861	0.243567988	2.122563362	-39.1779938
F183	EY	0	1.264902115	-4.8221E-06	-3.2165E-05	2.60903E-05	-0.20248108	0.059646904
F183	EY	1.25	1.264902115	-4.8221E-06	-3.2165E-05	2.60903E-05	-0.20244087	0.059652932
F183	EY	2.5	1.264902115	-4.8221E-06	-3.2165E-05	2.60903E-05	-0.20240067	0.05965896
F183	EY	3.75	1.264902115	-4.8221E-06	-3.2165E-05	2.60903E-05	-0.20236047	0.059664983
F183	EY	5	1.264902115	-4.8221E-06	-3.2165E-05	2.60903E-05	-0.20232026	0.059671011
F183	COMB1	0	3.035590649	-70.9852066	-0.00773465	-0.01308748	0.031728551	-64.1994019
F183	COMB1	1.25	3.035590649	-41.765831	-0.00773465	-0.01308748	0.04139686	8.219867706
F183	COMB1	2.5	3.035590649	0.182295486	-0.00773465	-0.01308748	0.051065169	34.41236496
F183	COMB1	3.75	3.035590649	42.13042068	-0.00773465	-0.01308748	0.060733482	7.764129639
F183	COMB1	5	3.035590649	71.34980011	-0.00773465	-0.01308748	0.070401788	-65.110878
F183	COMB2	0	-9.93121719	-38.8398857	-0.88036376	0.250853837	-2.21728826	-8.59750748
F183	COMB2	1.25	-9.93121719	-15.3920698	-0.88036376	0.250853837	-1.11683345	26.5621109
F183	COMB2	2.5	-9.93121719	16.31136703	-0.88036376	0.250853837	-0.01637868	26.11907387
F183	COMB2	3.75	-9.93121719	48.01480484	-0.88036376	0.250853837	1.084076047	-14.2163086
F183	COMB2	5	-9.93121719	71.4626236	-0.88036376	0.250853837	2.184530735	-90.1543503
F183	COMB3	0	-0.36940056	-50.130806	-0.27049798	0.07550405	-0.8449102	-36.8001022
F183	COMB3	1.25	-0.36940056	-26.682991	-0.27049798	0.07550405	-0.50678772	12.47317028
F183	COMB3	2.5	-0.36940056	5.020447254	-0.27049798	0.07550405	-0.16866522	26.14378357
F183	COMB3	3.75	-0.36940056	36.72388458	-0.27049798	0.07550405	0.169457301	-0.07794759
F183	COMB3	5	-0.36940056	60.17169952	-0.27049798	0.07550405	0.507579744	-61.9023399
F184	D	0	3.470775366	-50.9459114	0.018890401	-0.03450517	0.045765091	-46.714119
F184	D	1.25	3.470775366	-29.2005997	0.018890401	-0.03450517	0.022152085	4.459808826
F184	D	2.5	3.470775366	-0.38965982	0.018890401	-0.03450517	-0.00146092	23.06628609
F184	D	3.75	3.470775366	28.421278	0.018890401	-0.03450517	-0.02507392	5.433958054
F184	D	5	3.470775366	50.16659164	0.018890401	-0.03450517	-0.04868692	-44.7658195
F184	L	0	1.059560299	-6.75036335	0.023824589	-0.26765558	0.057709411	-7.23148727
F184	L	1.25	1.059560299	-4.79723787	0.023824589	-0.26765558	0.027928673	0.39266479
F184	L	2.5	1.059560299	-0.1878628	0.023824589	-0.26765558	-0.00185206	3.550670624
F184	L	3.75	1.059560299	4.421512127	0.023824589	-0.26765558	-0.0316328	0.862321794
F184	L	5	1.059560299	6.374637604	0.023824589	-0.26765558	-0.06141354	-6.29217291
F184	EX	0	-7.30355406	15.48533726	-0.69578671	-0.0568855	-2.1742754	38.90389252
F184	EX	1.25	-7.30355406	15.48533726	-0.69578671	-0.0568855	-1.30454183	19.54722023
F184	EX	2.5	-7.30355406	15.48533726	-0.69578671	-0.0568855	-0.4348084	0.190548256
F184	EX	3.75	-7.30355406	15.48533726	-0.69578671	-0.0568855	0.434925079	-19.1661243
F184	EX	5	-7.30355406	15.48533726	-0.69578671	-0.0568855	1.304658532	-38.5227966
F184	EY	0	0.890387297	0.164845541	-0.36566243	-0.18128121	-0.98107123	0.403522044
F184	EY	1.25	0.890387297	0.164845541	-0.36566243	-0.18128121	-0.52399319	0.197465092
F184	EY	2.5	0.890387297	0.164845541	-0.36566243	-0.18128121	-0.06691513	-0.00859184
F184	EY	3.75	0.890387297	0.164845541	-0.36566243	-0.18128121	0.390162915	-0.21464877
F184	EY	5	0.890387297	0.164845541	-0.36566243	-0.18128121	0.847240984	-0.42070571
F184	COMB1	0	5.860227108	-71.9356766	0.060787823	-0.46965513	0.147253171	-67.6273193
F184	COMB1	1.25	5.860227108	-42.716301	0.060787823	-0.46965513	0.07126838	5.980033875
F184	COMB1	2.5	5.860227108	-0.76817226	0.060787823	-0.46965513	-0.0047164	33.36061478
F184	COMB1	3.75	5.860227108	41.17995453	0.060787823	-0.46965513	-0.08070119	7.900464535
F184	COMB1	5	5.860227108	70.39933014	0.060787823	-0.46965513	-0.15668596	-63.7864571
F184	COMB2	0	-3.30063081	-39.5403214	-0.80798328	-0.236522	-2.49318075	-10.9351044
F184	COMB2	1.25	-3.30063081	-16.0925083	-0.80798328	-0.236522	-1.4832015	25.10006332
F184	COMB2	2.5	-3.30063081	15.61093044	-0.80798328	-0.236522	-0.47322232	25.53257179
F184	COMB2	3.75	-3.30063081	47.3143692	-0.80798328	-0.236522	0.536756814	-13.9272652
F184	COMB2	5	-3.30063081	70.76218414	-0.80798328	-0.236522	1.546736002	-88.9897614
F184	COMB3	0	2.612362862	-50.5686035	-0.57577872	-0.32880613	-1.64878976	-38.6493187
F184	COMB3	1.25	2.612362862	-27.1207905	-0.57577872	-0.32880613	-0.9290663	11.17120075
F184	COMB3	2.5	2.612362862	4.582649231	-0.57577872	-0.32880613	-0.2093429	25.38906288
F184	COMB3	3.75	2.612362862	36.28608704	-0.57577872	-0.32880613	0.510380507	-0.28542283
F184	COMB3	5	2.612362862	59.73390198	-0.57577872	-0.32880613	1.23010397	-61.5625648
F185	D	0	3.878769398	-53.3509712	-0.03267443	0.194533661	-0.08337963	-47.7266693
F185	D	1.25	3.878769398	-31.6056595	-0.03267443	0.194533661	-0.04253659	6.453582764
F185	D	2.5	3.878769398	-2.79472113	-0.03267443	0.194533661	-0.00169355	28.06638718
F185	D	3.75	3.878769398	26.01621628	-0.03267443	0.194533661	0.039149497	13.44038582
F185	D	5	3.878769398	47.76152802	-0.03267443	0.194533661	0.07999254	-33.753067
F185	L	0	1.147340894	-7.01743507	0.003277142	0.281497449	-0.00201261	-6.75878477
F185	L	1.25	1.147340894	-5.06431007	0.003277142	0.281497449	-0.00610904	1.199207067
F185	L	2.5	1.147340894	-0.45493478	0.003277142	0.281497449	-0.01020546	4.691052914
F185	L	3.75	1.147340894	4.154440403	0.003277142	0.281497449	-0.01430189	2.336544275
F185	L	5	1.147340894	6.107565403	0.003277142	0.281497449	-0.01839832	-4.48411083
F185	EX	0	-4.74214268	18.11642265	-0.32304448	-0.0554143	-0.65969867	42.44211197
F185	EX	1.25	-4.74214268	18.11642265	-0.32304448	-0.0554143	-0.25589308	19.79658699
F185	EX	2.5	-4.74214268	18.11642265	-0.32304448	-0.0554143	0.147912517	-2.84894204
F185	EX	3.75	-4.74214268	18.11642265	-0.32304448	-0.0554143	0.551718116	-25.4944687
F185	EX	5	-4.74214268	18.11642265	-0.32304448	-0.0554143	0.955523729	-48.1399956
F185	EY	0	0.214419633	-0.00284091	-0.13234533	-0.12654705	-0.22691928	-0.03451021
F185	EY	1.25	0.214419633	-0.00284091	-0.13234533	-0.12654705	-0.06148761	-0.03095908
F185	EY	2.5	0.214419633	-0.00284091	-0.13234533	-0.12654705	0.103944063	-0.02740794
F185	EY	3.75	0.214419633	-0.00284091	-0.13234533	-0.12654705	0.269375712	-0.0238568
F185	EY	5	0.214419633	-0.00284091	-0.13234533	-0.12654705	0.43480739	-0.02030566
F185	COMB1	0	6.490268707	-75.2490616	-0.03396589	0.683836341	-0.10327573	-68.0860596
F185	COMB1	1.25	6.490268707	-46.029686	-0.03396589	0.683836341	-0.06081836	9.663030624
F185	COMB1	2.5	6.490268707	-4.08156109	-0.03396589	0.683836341	-0.018361	41.18534851
F185	COMB1	3.75	6.490268707	37.8665657	-0.03396589	0.683836341	0.024096372	19.86693382
F185	COMB1	5	6.490268707	67.0859375	-0.03396589	0.683836341	0.066553742	-47.678257
F185	COMB2	0	-0.40645543	-39.4794083	-0.40931568	0.195715904	-0.84245026	-8.32530594
F185	COMB2	1.25	-0.40645543	-16.0315971	-0.40931568	0.195715904	-0.33080569	27.63372612

F185	COMB2	2.5	-0.40645543	15.67184067	-0.40931568	0.195715904	0.180838883	27.99009895
F185	COMB2	3.75	-0.40645543	47.37527847	-0.40931568	0.195715904	0.692483485	-11.5458746
F185	COMB2	5	-0.40645543	70.8230896	-0.40931568	0.195715904	1.204128146	-86.6845093
F185	COMB3	0	3.165485859	-52.525322	-0.27399746	0.142602116	-0.53425294	-38.9089928
F185	COMB3	1.25	3.165485859	-29.0775089	-0.27399746	0.142602116	-0.19175607	13.3574295
F185	COMB3	2.5	3.165485859	2.625928402	-0.27399746	0.142602116	0.150740758	30.02119255
F185	COMB3	3.75	3.165485859	34.32936478	-0.27399746	0.142602116	0.493237585	6.792608738
F185	COMB3	5	3.165485859	57.77717972	-0.27399746	0.142602116	0.835734427	-52.0386314
F186	D	0	4.901247025	-69.62883	0.20911482	12.7357645	0.32550475	-60.5726814
F186	D	0.75	4.901247025	-57.2885208	0.20911482	12.7357645	0.168668687	-12.7448997
F186	D	1.5	4.901247025	-41.207592	0.20911482	12.7357645	0.01183262	24.42492104
F186	D	2.25	4.901247025	-25.1266575	0.20911482	12.7357645	-0.14500344	49.0664711
F186	D	3	4.901247025	-12.7863493	0.20911482	12.7357645	-0.3018395	63.05004883
F186	L	0	1.486632347	-10.6812696	0.006943211	4.867154598	-0.01443302	-10.3913031
F186	L	0.75	1.486632347	-9.97814465	0.006943211	4.867154598	-0.01964042	-2.55613422
F186	L	1.5	1.486632347	-7.86877012	0.006943211	4.867154598	-0.02484783	4.224347591
F186	L	2.25	1.486632347	-5.7593956	0.006943211	4.867154598	-0.03005524	9.24701786
F186	L	3	1.486632347	-5.0562706	0.006943211	4.867154598	-0.03526264	13.21500015
F186	EX	0	-0.16793415	1.333848	-0.03188088	-3.11443257	0.277807564	2.192203522
F186	EX	0.75	-0.16793415	1.333848	-0.03188088	-3.11443257	0.301718205	1.19181776
F186	EX	1.5	-0.16793415	1.333848	-0.03188088	-3.11443257	0.325628877	0.191432133
F186	EX	2.25	-0.16793415	1.333848	-0.03188088	-3.11443257	0.349539518	-0.80895352
F186	EX	3	-0.16793415	1.333848	-0.03188088	-3.11443257	0.37345016	-1.80933917
F186	EY	0	-24.7730846	17.28339386	-0.21801485	-0.00058634	-0.4501093	56.21151733
F186	EY	0.75	-24.7730846	17.28339386	-0.21801485	-0.00058634	-0.28659821	43.24897385
F186	EY	1.5	-24.7730846	17.28339386	-0.21801485	-0.00058634	-0.12308712	30.28643227
F186	EY	2.25	-24.7730846	17.28339386	-0.21801485	-0.00058634	0.040423978	17.32389259
F186	EY	3	-24.7730846	17.28339386	-0.21801485	-0.00058634	0.203935072	4.361351013
F186	COMB1	0	8.260107994	-100.64463	0.262046903	23.070364	0.367512882	-89.3133011
F186	COMB1	0.75	8.260107994	-84.7112579	0.262046903	23.070364	0.170977741	-19.3836937
F186	COMB1	1.5	8.260107994	-62.0391388	0.262046903	23.070364	-0.02555738	36.06886292
F186	COMB1	2.25	8.260107994	-39.3670235	0.262046903	23.070364	-0.22209251	73.67498779
F186	COMB1	3	8.260107994	-23.4336529	0.262046903	23.070364	-0.41862762	96.80406189
F186	COMB2	0	-2.36273503	-69.6500702	0.120086275	11.68208408	0.482979983	-46.8990173
F186	COMB2	0.75	-2.36273503	-56.4712639	0.120086275	11.68208408	0.392915279	0.669631481
F186	COMB2	1.5	-2.36273503	-38.9218292	0.120086275	11.68208408	0.302850634	36.7151947
F186	COMB2	2.25	-2.36273503	-21.3723984	0.120086275	11.68208408	0.212785944	59.05236435
F186	COMB2	3	-2.36273503	-8.19359112	0.120086275	11.68208408	0.122721255	69.86643982
F186	COMB3	0	-20.4500389	-57.9071503	-0.01720041	13.92404461	-0.04787182	-7.16193819
F186	COMB3	0.75	-20.4500389	-44.7283401	-0.01720041	13.92404461	-0.03497151	31.59951973
F186	COMB3	1.5	-20.4500389	-27.1789074	-0.01720041	13.92404461	-0.02207119	58.83789444
F186	COMB3	2.25	-20.4500389	-9.62947464	-0.01720041	13.92404461	-0.00917089	72.36787415
F186	COMB3	3	-20.4500389	3.549332857	-0.01720041	13.92404461	0.003729411	74.37475586
F187	D	0	8.648921013	-76.0832825	0.146907672	-1.73051012	0.245085731	-73.4331665
F187	D	0.75	8.648921013	-69.3726578	0.146907672	-1.73051012	0.134905025	-18.4196301
F187	D	1.5	8.648921013	-55.1807861	0.146907672	-1.73051012	0.02472431	28.755476
F187	D	2.25	8.648921013	-40.9889183	0.146907672	-1.73051012	-0.0854564	64.35152435
F187	D	3	8.648921013	-34.2782936	0.146907672	-1.73051012	-0.19563712	92.10914612
F187	L	0	3.112806082	-22.9555702	0.013690478	-0.41930899	0.021337384	-23.0763187
F187	L	0.75	3.112806082	-21.5493202	0.013690478	-0.41930899	0.011069529	-6.21121025
F187	L	1.5	3.112806082	-17.3305702	0.013690478	-0.41930899	0.000801673	8.544525146
F187	L	2.25	3.112806082	-13.1118221	0.013690478	-0.41930899	-0.00946618	19.78463745
F187	L	3	3.112806082	-11.7055721	0.013690478	-0.41930899	-0.01973404	28.91537666
F187	EX	0	-0.44125864	-0.07261024	0.621428132	-3.93623877	1.389341474	0.572303057
F187	EX	0.75	-0.44125864	-0.07261024	0.621428132	-3.93623877	0.923270524	0.626760781
F187	EX	1.5	-0.44125864	-0.07261024	0.621428132	-3.93623877	0.457199574	0.681218445
F187	EX	2.25	-0.44125864	-0.07261024	0.621428132	-3.93623877	-0.00887137	0.73567611
F187	EX	3	-0.44125864	-0.07261024	0.621428132	-3.93623877	-0.4749423	0.790133715
F187	EY	0	-24.5745907	16.49516106	-0.62943619	0.006896011	-1.28174365	53.72635651
F187	EY	0.75	-24.5745907	16.49516106	-0.62943619	0.006896011	-0.80966663	41.3549881
F187	EY	1.5	-24.5745907	16.49516106	-0.62943619	0.006896011	-0.33758965	28.9836216
F187	EY	2.25	-24.5745907	16.49516106	-0.62943619	0.006896011	0.134487361	16.61225319
F187	EY	3	-24.5745907	16.49516106	-0.62943619	0.006896011	0.606564343	4.240885735
F187	COMB1	0	15.35919476	-128.028854	0.198193967	-2.74750662	0.328242689	-125.041908
F187	COMB1	0.75	15.35919476	-117.726105	0.198193967	-2.74750662	0.179597288	-32.0414925
F187	COMB1	1.5	15.35919476	-93.9458542	0.198193967	-2.74750662	0.030951848	48.17781067
F187	COMB1	2.25	15.35919476	-70.1656189	0.198193967	-2.74750662	-0.11769358	108.8772507
F187	COMB1	3	15.35919476	-59.8628693	0.198193967	-2.74750662	-0.266339	156.795578
F187	COMB2	0	1.864202023	-81.9976273	0.603471279	-6.0209527	1.298280478	-66.8577271
F187	COMB2	0.75	1.864202023	-74.5084991	0.603471279	-6.0209527	0.845677137	-7.62162399
F187	COMB2	1.5	1.864202023	-58.2781296	0.603471279	-6.0209527	0.393073887	42.71967697
F187	COMB2	2.25	1.864202023	-42.0477638	0.603471279	-6.0209527	-0.05952942	79.79554749
F187	COMB2	3	1.864202023	-34.5586395	0.603471279	-6.0209527	-0.5121327	107.9766159
F187	COMB3	0	-15.8804159	-69.8214035	-0.30659258	-3.1817925	-0.64412695	-27.7809162
F187	COMB3	0.75	-15.8804159	-62.3322792	-0.30659258	-3.1817925	-0.41418257	22.32302475
F187	COMB3	1.5	-15.8804159	-46.1019096	-0.30659258	-3.1817925	-0.1842382	63.53216171
F187	COMB3	2.25	-15.8804159	-29.871542	-0.30659258	-3.1817925	0.045706179	91.47586823
F187	COMB3	3	-15.8804159	-22.3824177	-0.30659258	-3.1817925	0.275650561	110.524765
F188	D	0	5.962251186	-72.8913422	0.0602584	-0.02475456	0.137451857	-66.687767
F188	D	0.75	5.962251186	-66.1807098	0.0602584	-0.02475456	0.092258066	-14.0681925
F188	D	1.5	5.962251186	-51.9888458	0.0602584	-0.02475456	0.047064282	30.71295738
F188	D	2.25	5.962251186	-37.796978	0.0602584	-0.02475456	0.001870494	63.91505051
F188	D	3	5.962251186	-31.0863552	0.0602584	-0.02475456	-0.04332329	89.27871704
F188	L	0	1.97218895	-22.0194759	-0.00311177	-0.00258677	-0.00513303	-21.0598373

F188	L	0.75	1.97218895	-20.6132278	-0.00311177	-0.00258677	-0.0027992	-4.8967967
F188	L	1.5	1.97218895	-16.3944778	-0.00311177	-0.00258677	-0.00046538	9.156870842
F188	L	2.25	1.97218895	-12.1757307	-0.00311177	-0.00258677	0.001868451	19.69491386
F188	L	3	1.97218895	-10.7694807	-0.00311177	-0.00258677	0.004202279	28.12358475
F188	EX	0	-1.87729919	0.467944741	-0.53694427	-3.76861835	-1.47426772	1.609946489
F188	EX	0.75	-1.87729919	0.467944741	-0.53694427	-3.76861835	-1.07155955	1.258988023
F188	EX	1.5	-1.87729919	0.467944741	-0.53694427	-3.76861835	-0.66885144	0.908029616
F188	EX	2.25	-1.87729919	0.467944741	-0.53694427	-3.76861835	-0.26614338	0.55707109
F188	EX	3	-1.87729919	0.467944741	-0.53694427	-3.76861835	0.136564732	0.206112668
F188	EY	0	-29.1160603	15.15074158	-0.38314986	0.011558899	-0.78006172	49.92037582
F188	EY	0.75	-29.1160603	15.15074158	-0.38314986	0.011558899	-0.49269947	38.55731964
F188	EY	1.5	-29.1160603	15.15074158	-0.38314986	0.011558899	-0.20533717	27.19426918
F188	EY	2.25	-29.1160603	15.15074158	-0.38314986	0.011558899	0.082025148	15.83121777
F188	EY	3	-29.1160603	15.15074158	-0.38314986	0.011558899	0.369387448	4.468164921
F188	COMB1	0	10.31020355	-122.700768	0.067331247	-0.03384431	0.15672937	-113.721062
F188	COMB1	0.75	10.31020355	-112.398018	0.067331247	-0.03384431	0.106230952	-24.7167053
F188	COMB1	1.5	10.31020355	-88.6177826	0.067331247	-0.03384431	0.055732533	51.50654221
F188	COMB1	2.25	10.31020355	-64.8375397	0.067331247	-0.03384431	0.005234114	108.2099228
F188	COMB1	3	10.31020355	-54.5347939	0.067331247	-0.03384431	-0.0452643	152.1322021
F188	COMB2	0	-4.23296022	-78.2152328	-0.61413842	-3.92368603	-1.62887895	-59.2647934
F188	COMB2	0.75	-4.23296022	-70.7261047	-0.61413842	-3.92368603	-1.16827524	-2.86548448
F188	COMB2	1.5	-4.23296022	-54.4957428	-0.61413842	-3.92368603	-0.70767158	44.63902283
F188	COMB2	2.25	-4.23296022	-38.265377	-0.61413842	-3.92368603	-0.2470679	78.87810516
F188	COMB2	3	-4.23296022	-30.7762527	-0.61413842	-3.92368603	0.213535801	104.2223816
F188	COMB3	0	-24.2816105	-67.4163589	-0.50915366	-1.20178509	-1.1407516	-23.7324791
F188	COMB3	0.75	-24.2816105	-59.9272346	-0.50915366	-1.20178509	-0.75888646	24.56767464
F188	COMB3	1.5	-24.2816105	-43.6968689	-0.50915366	-1.20178509	-0.37702131	63.97303009
F188	COMB3	2.25	-24.2816105	-27.4665012	-0.50915366	-1.20178509	0.004843821	90.11295319
F188	COMB3	3	-24.2816105	-19.9773788	-0.50915366	-1.20178509	0.386708975	107.358078
F189	D	0	5.967796803	-72.8577881	-0.06850308	-0.0252647	-0.15733021	-66.6451416
F189	D	0.75	5.967796803	-66.147171	-0.06850308	-0.0252647	-0.10595293	-14.0507183
F189	D	1.5	5.967796803	-51.9553032	-0.06850308	-0.0252647	-0.05457564	30.70527458
F189	D	2.25	5.967796803	-37.7634354	-0.06850308	-0.0252647	-0.00319835	63.88220978
F189	D	3	5.967796803	-31.0528126	-0.06850308	-0.0252647	0.048178945	89.22071838
F189	L	0	2.071758747	-22.120203	-0.01026528	0.105423473	-0.02562991	-21.1437569
F189	L	0.75	2.071758747	-20.7139511	-0.01026528	0.105423473	-0.01793095	-4.9051733
F189	L	1.5	2.071758747	-16.495203	-0.01026528	0.105423473	-0.01023198	9.224036217
F189	L	2.25	2.071758747	-12.276454	-0.01026528	0.105423473	-0.00253302	19.8376255
F189	L	3	2.071758747	-10.8702049	-0.01026528	0.105423473	0.005165937	28.34183693
F189	EX	0	1.838762164	-0.47803009	-0.3727636	-3.76334286	-1.23643446	-1.63220847
F189	EX	0.75	1.838762164	-0.47803009	-0.3727636	-3.76334286	-0.95686179	-1.27368593
F189	EX	1.5	1.838762164	-0.47803009	-0.3727636	-3.76334286	-0.67728913	-0.91516346
F189	EX	2.25	1.838762164	-0.47803009	-0.3727636	-3.76334286	-0.39771655	-0.55664104
F189	EX	3	1.838762164	-0.47803009	-0.3727636	-3.76334286	-0.11814393	-0.19811857
F189	EY	0	-29.1165009	15.15060997	0.383185744	-0.0115594	0.780134559	49.91992569
F189	EY	0.75	-29.1165009	15.15060997	0.383185744	-0.0115594	0.49274525	38.55696869
F189	EY	1.5	-29.1165009	15.15060997	0.383185744	-0.0115594	0.205356061	27.1940155
F189	EY	2.25	-29.1165009	15.15060997	0.383185744	-0.0115594	-0.08203318	15.83106136
F189	EY	3	-29.1165009	15.15060997	0.383185744	-0.0115594	-0.36942241	4.468107224
F189	COMB1	0	10.47617054	-122.821671	-0.09862815	0.138359919	-0.22980411	-113.804176
F189	COMB1	0.75	10.47617054	-112.518921	-0.09862815	0.138359919	-0.15583304	-24.7091389
F189	COMB1	1.5	10.47617054	-88.7386856	-0.09862815	0.138359919	-0.08186194	51.60478973
F189	COMB1	2.25	10.47617054	-64.9584503	-0.09862815	0.138359919	-0.00789086	108.3988495
F189	COMB1	3	10.47617054	-54.6557045	-0.09862815	0.138359919	0.066080235	152.4118042
F189	COMB2	0	-0.34978798	-79.1908646	-0.34026861	-3.89202046	-1.20723748	-62.6022377
F189	COMB2	0.75	-0.34978798	-71.7017441	-0.34026861	-3.89202046	-0.95203602	-5.4712038
F189	COMB2	1.5	-0.34978798	-55.4713745	-0.34026861	-3.89202046	-0.69683462	42.76502991
F189	COMB2	2.25	-0.34978798	-39.2410088	-0.34026861	-3.89202046	-0.44163325	77.73583221
F189	COMB2	3	-0.34978798	-31.7518864	-0.34026861	-3.89202046	-0.18643187	103.8118362
F189	COMB3	0	-23.0743237	-67.7109833	0.209762707	-1.19090986	0.256394237	-24.7359047
F189	COMB3	0.75	-23.0743237	-60.2218628	0.209762707	-1.19090986	0.099072233	23.78522301
F189	COMB3	1.5	-23.0743237	-43.991497	0.209762707	-1.19090986	-0.05824972	63.41154861
F189	COMB3	2.25	-23.0743237	-27.7611294	0.209762707	-1.19090986	-0.21557172	89.77244568
F189	COMB3	3	-23.0743237	-20.272007	0.209762707	-1.19090986	-0.37289372	107.2385406
F190	D	0	8.715116501	-76.1951218	-0.15249372	1.921754718	-0.25767094	-73.4764252
F190	D	0.75	8.715116501	-69.4844971	-0.15249372	1.921754718	-0.14330071	-18.3790054
F190	D	1.5	8.715116501	-55.2926292	-0.15249372	1.921754718	-0.02893046	28.87998009
F190	D	2.25	8.715116501	-41.1007614	-0.15249372	1.921754718	0.085439786	64.55991364
F190	D	3	8.715116501	-34.3901405	-0.15249372	1.921754718	0.199810013	92.40141296
F190	L	0	4.124677658	-32.3467941	-0.02193734	0.631197453	-0.03927822	-30.5743904
F190	L	0.75	4.124677658	-29.674921	-0.02193734	0.631197453	-0.02282522	-6.98227167
F190	L	1.5	4.124677658	-21.6592979	-0.02193734	0.631197453	-0.00637222	12.60203838
F190	L	2.25	4.124677658	-13.6436758	-0.02193734	0.631197453	0.010080785	25.50666618
F190	L	3	4.124677658	-10.9718008	-0.02193734	0.631197453	0.026533786	34.40348053
F190	EX	0	0.317394882	0.066318415	1.071560979	-3.88854623	1.9954741	-0.57271892
F190	EX	0.75	0.317394882	0.066318415	1.071560979	-3.88854623	1.191803455	-0.62245768
F190	EX	1.5	0.317394882	0.066318415	1.071560979	-3.88854623	0.38813296	-0.67219651
F190	EX	2.25	0.317394882	0.066318415	1.071560979	-3.88854623	-0.41553757	-0.72193527
F190	EX	3	0.317394882	0.066318415	1.071560979	-3.88854623	-1.21920812	-0.7716741
F190	EY	0	-24.5746098	16.49516869	0.629409671	-0.00689176	1.281686664	53.72637177
F190	EY	0.75	-24.5746098	16.49516869	0.629409671	-0.00689176	0.8096295	41.35499954
F190	EY	1.5	-24.5746098	16.49516869	0.629409671	-0.00689176	0.337572396	28.98362732
F190	EY	2.25	-24.5746098	16.49516869	0.629409671	-0.00689176	-0.13448472	16.61225319
F190	EY	3	-24.5746098	16.49516869	0.629409671	-0.00689176	-0.60654181	4.240880013

F190	COMB1	0	17.05762482	-143.189011	-0.2180922	3.316021681	-0.37205029	-137.090729
F190	COMB1	0.75	17.05762482	-130.861267	-0.2180922	3.316021681	-0.20848121	-33.2264404
F190	COMB1	1.5	17.05762482	-101.006035	-0.2180922	3.316021681	-0.0449121	54.81923676
F190	COMB1	2.25	17.05762482	-71.150795	-0.2180922	3.316021681	0.118656993	118.2825623
F190	COMB1	3	17.05762482	-58.8230476	-0.2180922	3.316021681	0.282226086	165.9272614
F190	COMB2	0	3.037647963	-84.9294968	1.140300989	-1.81014657	2.186119795	-70.4501343
F190	COMB2	0.75	3.037647963	-77.0417023	1.140300989	-1.81014657	1.330894232	-9.11479092
F190	COMB2	1.5	3.037647963	-59.6153221	1.140300989	-1.81014657	0.475668669	42.72774124
F190	COMB2	2.25	3.037647963	-42.1889381	1.140300989	-1.81014657	-0.37955686	80.3081665
F190	COMB2	3	3.037647963	-34.3011475	1.140300989	-1.81014657	-1.23478246	108.3957748
F190	COMB3	0	-15.2532139	-72.853302	0.831393242	0.984541237	1.691418171	-30.5488949
F190	COMB3	0.75	-15.2532139	-64.9655075	0.831393242	0.984541237	1.067873359	21.72930336
F190	COMB3	1.5	-15.2532139	-47.5391235	0.831393242	0.984541237	0.444328666	64.51468658
F190	COMB3	2.25	-15.2532139	-30.1127377	0.831393242	0.984541237	-0.17921607	93.03796387
F190	COMB3	3	-15.2532139	-22.2249451	0.831393242	0.984541237	-0.80276084	112.068428
F191	D	0	6.362506866	-83.4970322	-0.21732704	-12.4481592	-0.34662694	-71.6983185
F191	D	0.75	6.362506866	-69.2864075	-0.21732704	-12.4481592	-0.18363172	-13.9369736
F191	D	1.5	6.362506866	-47.5945396	-0.21732704	-12.4481592	-0.02063648	30.36094856
F191	D	2.25	6.362506866	-25.9026775	-0.21732704	-12.4481592	0.14235875	57.45481873
F191	D	3	6.362506866	-11.6920557	-0.21732704	-12.4481592	0.305353969	71.08526611
F191	L	0	3.067172766	-25.353508	-0.0120885	-4.79498482	0.001088165	-22.1245747
F191	L	0.75	3.067172766	-22.681633	-0.0120885	-4.79498482	0.010154541	-3.77741814
F191	L	1.5	3.067172766	-14.6660099	-0.0120885	-4.79498482	0.019220915	10.56192875
F191	L	2.25	3.067172766	-6.65038776	-0.0120885	-4.79498482	0.02828729	18.22159195
F191	L	3	3.067172766	-3.97851324	-0.0120885	-4.79498482	0.037353665	21.8734436
F191	EX	0	0.334078193	-1.31554532	0.612795711	-3.04493093	0.9736166	-2.16389132
F191	EX	0.75	0.334078193	-1.31554532	0.612795711	-3.04493093	0.514019966	-1.17723262
F191	EX	1.5	0.334078193	-1.31554532	0.612795711	-3.04493093	0.054423276	-0.19057387
F191	EX	2.25	0.334078193	-1.31554532	0.612795711	-3.04493093	-0.40517339	0.796084881
F191	EX	3	0.334078193	-1.31554532	0.612795711	-3.04493093	-0.86477005	1.782743573
F191	EY	0	-24.773077	17.2834034	0.21801509	0.000587839	0.450111717	56.21154785
F191	EY	0.75	-24.773077	17.2834034	0.21801509	0.000587839	0.286600411	43.24899673
F191	EY	1.5	-24.773077	17.2834034	0.21801509	0.000587839	0.123089164	30.28644943
F191	EY	2.25	-24.773077	17.2834034	0.21801509	0.000587839	-0.0404221	17.32390213
F191	EY	3	-24.773077	17.2834034	0.21801509	0.000587839	-0.20393337	4.361352921
F191	COMB1	0	12.54248428	-140.762054	-0.28013405	-22.609766	-0.41421124	-121.437302
F191	COMB1	0.75	12.54248428	-119.434303	-0.28013405	-22.609766	-0.2041108	-22.7682381
F191	COMB1	1.5	12.54248428	-80.5790634	-0.28013405	-22.609766	0.005989688	53.33222198
F191	COMB1	2.25	12.54248428	-41.723835	-0.28013405	-22.609766	0.216090173	98.10032654
F191	COMB1	3	12.54248428	-20.3960876	-0.28013405	-22.609766	0.426190645	120.2998199
F191	COMB2	0	0.189043328	-91.5755539	0.470917076	-17.7323055	0.785862863	-66.7854691
F191	COMB2	0.75	0.189043328	-75.8127594	0.470917076	-17.7323055	0.432675153	-3.41871023
F191	COMB2	1.5	0.189043328	-50.5113792	0.470917076	-17.7323055	0.079487458	44.54899216
F191	COMB2	2.25	0.189043328	-25.210001	0.470917076	-17.7323055	-0.27370021	72.34833527
F191	COMB2	3	0.189043328	-9.4472084	0.470917076	-17.7323055	-0.62688792	84.74862671
F191	COMB3	0	-18.2597046	-77.9250641	0.189945221	-15.5395231	0.415691018	-23.9119797
F191	COMB3	0.75	-18.2597046	-62.1622696	0.189945221	-15.5395231	0.273232102	29.21691132
F191	COMB3	1.5	-18.2597046	-36.8608856	0.189945221	-15.5395231	0.130773231	66.94674683
F191	COMB3	2.25	-18.2597046	-11.5595074	0.189945221	-15.5395231	-0.01168563	84.50822449
F191	COMB3	3	-18.2597046	4.203285694	0.189945221	-15.5395231	-0.15414451	86.67064667
F192	D	0	0.409480423	-35.8580704	0.004918154	0.03777869	0.013462671	-25.0689735
F192	D	1.25	0.409480423	-23.2174511	0.004918154	0.03777869	0.007314979	14.01794338
F192	D	2.5	0.409480423	3.554418802	0.004918154	0.03777869	0.001167286	26.5324688
F192	D	3.75	0.409480423	30.32628822	0.004918154	0.03777869	-0.00498041	5.131896496
F192	D	5	0.409480423	42.96691132	0.004918154	0.03777869	-0.0111281	-42.8410645
F192	L	0	0.044678245	-12.0672579	0.004042447	-0.00257028	0.01117718	-8.92397976
F192	L	1.25	0.044678245	-8.16100788	0.004042447	-0.00257028	0.006124122	4.532488823
F192	L	2.5	0.044678245	1.057742715	0.004042447	-0.00257028	0.001071063	9.056665421
F192	L	3.75	0.044678245	10.27649307	0.004042447	-0.00257028	-0.003982	1.888131738
F192	L	5	0.044678245	14.18274307	0.004042447	-0.00257028	-0.00903506	-14.2126932
F192	EX	0	-0.67299986	2.290676832	-0.23460659	0.002813048	-0.58781374	6.678070068
F192	EX	1.25	-0.67299986	2.290676832	-0.23460659	0.002813048	-0.29455552	3.814723969
F192	EX	2.5	-0.67299986	2.290676832	-0.23460659	0.002813048	-0.00129726	0.951377928
F192	EX	3.75	-0.67299986	2.290676832	-0.23460659	0.002813048	0.291960984	-1.91196835
F192	EX	5	-0.67299986	2.290676832	-0.23460659	0.002813048	0.585219204	-4.77531433
F192	EY	0	-0.05117796	0.013172206	0.154987007	-0.01476252	0.386947095	0.024149755
F192	EY	1.25	-0.05117796	0.013172206	0.154987007	-0.01476252	0.193213314	0.007684497
F192	EY	2.5	-0.05117796	0.013172206	0.154987007	-0.01476252	-0.00052045	-0.00878076
F192	EY	3.75	-0.05117796	0.013172206	0.154987007	-0.01476252	-0.19425422	-0.02524602
F192	EY	5	-0.05117796	0.013172206	0.154987007	-0.01476252	-0.38798797	-0.04171128
F192	COMB1	0	0.562861681	-62.3372993	0.0123697	0.041221984	0.034038693	-44.3611374
F192	COMB1	1.25	0.562861681	-40.9185524	0.0123697	0.041221984	0.018576568	24.07351494
F192	COMB1	2.5	0.562861681	5.957690716	0.0123697	0.041221984	0.003114444	46.32962799
F192	COMB1	3.75	0.562861681	52.83393478	0.0123697	0.041221984	-0.01234768	9.179286957
F192	COMB1	5	0.562861681	74.25267792	0.0123697	0.041221984	-0.02780981	-74.1495895
F192	COMB2	0	-0.26864785	-39.0771599	-0.18755949	0.037119299	-0.46884227	-22.2140656
F192	COMB2	1.25	-0.26864785	-24.5740414	-0.18755949	0.037119299	-0.23439293	20.09723473
F192	COMB2	2.5	-0.26864785	6.440328121	-0.18755949	0.037119299	5.64357E-05	31.69385338
F192	COMB2	3.75	-0.26864785	37.45469666	-0.18755949	0.037119299	0.234505773	3.996413231
F192	COMB2	5	-0.26864785	51.95781708	-0.18755949	0.037119299	0.468955129	-54.4157066
F192	COMB3	0	0.178296268	-40.7167664	0.095272712	0.024243455	0.238789737	-27.0045261
F192	COMB3	1.25	0.178296268	-26.2136459	0.095272712	0.024243455	0.11969883	17.35628128
F192	COMB3	2.5	0.178296268	4.800722599	0.095272712	0.024243455	0.000607931	31.00240707
F192	COMB3	3.75	0.178296268	35.81509399	0.095272712	0.024243455	-0.11848298	5.354474545

F192	COMB3	5	0.178296268	50.31821442	0.095272712	0.024243455	-0.23757386	-51.0081406
F193	D	0	0.645517051	-39.6086655	-0.02347968	0.089681856	-0.05464585	-40.0287781
F193	D	1.25	0.645517051	-26.9680443	-0.02347968	0.089681856	-0.02529626	3.746381998
F193	D	2.5	0.645517051	-0.19617495	-0.02347968	0.089681856	0.004053339	20.94915009
F193	D	3.75	0.645517051	26.57569504	-0.02347968	0.089681856	0.033402935	4.236819267
F193	D	5	0.645517051	39.21632004	-0.02347968	0.089681856	0.06275253	-39.0479012
F193	L	0	0.063814007	-13.1458549	-0.00736874	0.026458092	-0.018641	-13.4297972
F193	L	1.25	0.063814007	-9.23960495	-0.00736874	0.026458092	-0.00943007	1.374917984
F193	L	2.5	0.063814007	-0.02085477	-0.00736874	0.026458092	-0.00021914	7.247341633
F193	L	3.75	0.063814007	9.197896004	-0.00736874	0.026458092	0.008991788	1.427054882
F193	L	5	0.063814007	13.10414505	-0.00736874	0.026458092	0.018202716	-13.3255234
F193	EX	0	-0.55474097	1.427606225	-0.20215999	-0.00834034	-0.54015684	3.48816371
F193	EX	1.25	-0.55474097	1.427606225	-0.20215999	-0.00834034	-0.28745684	1.703655839
F193	EX	2.5	-0.55474097	1.427606225	-0.20215999	-0.00834034	-0.03475684	-0.08085191
F193	EX	3.75	-0.55474097	1.427606225	-0.20215999	-0.00834034	0.217943147	-1.86535966
F193	EX	5	-0.55474097	1.427606225	-0.20215999	-0.00834034	0.470643103	-3.64986753
F193	EY	0	-0.23887764	-0.02285572	0.26707378	-0.01784614	0.666909754	-0.06051513
F193	EY	1.25	-0.23887764	-0.02285572	0.26707378	-0.01784614	0.333067507	-0.03194548
F193	EY	2.5	-0.23887764	-0.02285572	0.26707378	-0.01784614	-0.00077473	-0.00337582
F193	EY	3.75	-0.23887764	-0.02285572	0.26707378	-0.01784614	-0.33461699	0.025193831
F193	EY	5	-0.23887764	-0.02285572	0.26707378	-0.01784614	-0.66845918	0.053763483
F193	COMB1	0	0.876722872	-68.5637665	-0.0399656	0.149951175	-0.09540062	-69.5222092
F193	COMB1	1.25	0.876722872	-47.1450195	-0.0399656	0.149951175	-0.04544361	6.695527077
F193	COMB1	2.5	0.876722872	-0.26877755	-0.0399656	0.149951175	0.004513384	36.73472595
F193	COMB1	3.75	0.876722872	46.60746765	-0.0399656	0.149951175	0.054470383	7.367471218
F193	COMB1	5	0.876722872	68.0262146	-0.0399656	0.149951175	0.104427382	-68.1783218
F193	COMB2	0	0.048490997	-44.2596703	-0.15208216	0.088246457	-0.4122358	-42.6694183
F193	COMB2	1.25	0.048490997	-29.7565479	-0.15208216	0.088246457	-0.2221331	6.120021343
F193	COMB2	2.5	0.048490997	1.257819891	-0.15208216	0.088246457	-0.03203039	24.19477463
F193	COMB2	3.75	0.048490997	32.27219009	-0.15208216	0.088246457	0.158072308	2.975471497
F193	COMB2	5	0.048490997	46.77531433	-0.15208216	0.088246457	0.348174989	-48.9585152
F193	COMB3	0	0.27232942	-45.304348	0.189772263	0.081134595	0.466855764	-45.2253723
F193	COMB3	1.25	0.27232942	-30.8012238	0.189772263	0.081134595	0.229640439	4.869909286
F193	COMB3	2.5	0.27232942	0.213144496	0.189772263	0.081134595	-0.0075749	24.25050735
F193	COMB3	3.75	0.27232942	31.22751427	0.189772263	0.081134595	-0.24479024	4.337048054
F193	COMB3	5	0.27232942	45.7306366	0.189772263	0.081134595	-0.48200557	-46.2910957
F194	D	0	0.656123638	-39.4126244	0.000684095	0.000202284	-0.00224458	-38.930542
F194	D	1.25	0.656123638	-26.7720032	0.000684095	0.000202284	-0.0030997	4.599565506
F194	D	2.5	0.656123638	-0.00013345	0.000684095	0.000202284	-0.00395482	21.55728149
F194	D	3.75	0.656123638	26.77173615	0.000684095	0.000202284	-0.00480994	4.599899769
F194	D	5	0.656123638	39.41235733	0.000684095	0.000202284	-0.00566506	-38.9298744
F194	L	0	0.046486545	-13.0815535	0.001228208	-0.00017837	0.002062586	-13.1483011
F194	L	1.25	0.046486545	-9.17530346	0.001228208	-0.00017837	0.000527327	1.57603693
F194	L	2.5	0.046486545	0.043447014	0.001228208	-0.00017837	-0.00100793	7.368082523
F194	L	3.75	0.046486545	9.262197495	0.001228208	-0.00017837	-0.00254319	1.467419386
F194	L	5	0.046486545	13.16844749	0.001228208	-0.00017837	-0.00407845	-13.3655357
F194	EX	0	-1.41641772	1.59899056	-0.0268551	0.00101918	-0.06684857	4.002621174
F194	EX	1.25	-1.41641772	1.59899056	-0.0268551	0.00101918	-0.03327969	2.003882408
F194	EX	2.5	-1.41641772	1.59899056	-0.0268551	0.00101918	0.000289189	0.005144275
F194	EX	3.75	-1.41641772	1.59899056	-0.0268551	0.00101918	0.033858068	-1.99359405
F194	EX	5	-1.41641772	1.59899056	-0.0268551	0.00101918	0.067426942	-3.99233246
F194	EY	0	-0.32163623	2.62595E-06	-1.6417E-05	-2.4227E-06	-0.00034495	0.020957015
F194	EY	1.25	-0.32163623	2.62595E-06	-1.6417E-05	-2.4227E-06	-0.00032443	0.020953732
F194	EY	2.5	-0.32163623	2.62595E-06	-1.6417E-05	-2.4227E-06	-0.00030391	0.020950451
F194	EY	3.75	-0.32163623	2.62595E-06	-1.6417E-05	-2.4227E-06	-0.00028339	0.020947168
F194	EY	5	-0.32163623	2.62595E-06	-1.6417E-05	-2.4227E-06	-0.00026286	0.020943886
F194	COMB1	0	0.86172688	-68.2256317	0.002786046	-4.2653E-05	0.000606637	-67.7539291
F194	COMB1	1.25	0.86172688	-46.8068886	0.002786046	-4.2653E-05	-0.00287592	8.041137695
F194	COMB1	2.5	0.86172688	0.069355078	0.002786046	-4.2653E-05	-0.00635848	37.65766907
F194	COMB1	3.75	0.86172688	46.9455986	0.002786046	-4.2653E-05	-0.00984104	7.867750645
F194	COMB1	5	0.86172688	68.36434174	0.002786046	-4.2653E-05	-0.0133236	-68.100708
F194	COMB2	0	-0.8637346	-43.8489876	-0.02669502	0.0012103	-0.07100403	-40.8694687
F194	COMB2	1.25	-0.8637346	-29.3458672	-0.02669502	0.0012103	-0.03763526	7.406614304
F194	COMB2	2.5	-0.8637346	1.668501735	-0.02669502	0.0012103	-0.00426648	24.96801567
F194	COMB2	3.75	-0.8637346	32.68287277	-0.02669502	0.0012103	0.029102288	3.235360384
F194	COMB2	5	-0.8637346	47.18599319	-0.02669502	0.0012103	0.062471058	-49.2119789
F194	COMB3	0	-0.0803165	-45.0002594	-0.00737141	0.000474709	-0.0231266	-43.7359543
F194	COMB3	1.25	-0.0803165	-30.497139	-0.00737141	0.000474709	-0.01391233	5.979219913
F194	COMB3	2.5	-0.0803165	0.517230511	-0.00737141	0.000474709	-0.00469807	24.97970963
F194	COMB3	3.75	-0.0803165	31.53159904	-0.00737141	0.000474709	0.004516192	4.686144352
F194	COMB3	5	-0.0803165	46.03472137	-0.00737141	0.000474709	0.013730454	-46.3221054
F195	D	0	0.640268087	-39.1467514	0.02428587	-0.08975242	0.065008089	-38.9499283
F195	D	1.25	0.640268087	-26.5061302	0.02428587	-0.08975242	0.03465075	4.247834682
F195	D	2.5	0.640268087	0.26573962	0.02428587	-0.08975242	0.004293414	20.873209
F195	D	3.75	0.640268087	27.0376091	0.02428587	-0.08975242	-0.02606392	3.583485365
F195	D	5	0.640268087	39.6782341	0.02428587	-0.08975242	-0.05642127	-40.2786293
F195	L	0	0.059347287	-13.2506952	0.011578475	-0.02365265	0.028962677	-13.7257843
F195	L	1.25	0.059347287	-9.34444523	0.011578475	-0.02365265	0.01448958	1.209981799
F195	L	2.5	0.059347287	-0.12569492	0.011578475	-0.02365265	1.64855E-05	7.2134552
F195	L	3.75	0.059347287	9.093054771	0.011578475	-0.02365265	-0.01445661	1.524219155
F195	L	5	0.059347287	12.99930573	0.011578475	-0.02365265	-0.02892971	-13.0973091
F195	EX	0	-1.94808197	1.415202975	-0.20311247	-0.00810145	-0.47374693	3.618741751
F195	EX	1.25	-1.94808197	1.415202975	-0.20311247	-0.00810145	-0.21985634	1.849738002
F195	EX	2.5	-1.94808197	1.415202975	-0.20311247	-0.00810145	0.034034241	0.080734156

F195	EX	3.75	-1.94808197	1.415202975	-0.20311247	-0.00810145	0.287924826	-1.68826962
F195	EX	5	-1.94808197	1.415202975	-0.20311247	-0.00810145	0.54181546	-3.45727348
F195	EY	0	-0.23886618	0.022851994	-0.26706442	0.017848661	-0.66843611	0.053752743
F195	EY	1.25	-0.23886618	0.022851994	-0.26706442	0.017848661	-0.33460557	0.025187751
F195	EY	2.5	-0.23886618	0.022851994	-0.26706442	0.017848661	-0.00077506	-0.00337724
F195	EY	3.75	-0.23886618	0.022851994	-0.26706442	0.017848661	0.333055466	-0.03194223
F195	EY	5	-0.23886618	0.022851994	-0.26706442	0.017848661	0.666885972	-0.06050723
F195	COMB1	0	0.863277316	-68.1772156	0.047668606	-0.14554715	0.124349989	-68.7011719
F195	COMB1	1.25	0.863277316	-46.7584686	0.047668606	-0.14554715	0.064764231	7.033372402
F195	COMB1	2.5	0.863277316	0.117775679	0.047668606	-0.14554715	0.005178473	36.58937836
F195	COMB1	3.75	0.863277316	46.99401855	0.047668606	-0.14554715	-0.05440728	6.738933086
F195	COMB1	5	0.863277316	68.41277313	0.047668606	-0.14554715	-0.11399305	-69.2900467
F195	COMB2	0	-1.40053177	-43.8061256	-0.2651993	-0.1044533	-0.62350368	-41.4587173
F195	COMB2	1.25	-1.40053177	-29.3030033	-0.2651993	-0.1044533	-0.29200456	6.763783455
F195	COMB2	2.5	-1.40053177	1.711366177	-0.2651993	-0.1044533	0.039494574	24.27160454
F195	COMB2	3.75	-1.40053177	32.72573471	-0.2651993	-0.1044533	0.370993704	2.485367775
F195	COMB2	5	-1.40053177	47.22885895	-0.2651993	-0.1044533	0.702492893	-50.0155525
F195	COMB3	0	-0.17347942	-44.8082733	-0.31525066	-0.08550149	-0.7737065	-44.024704
F195	COMB3	1.25	-0.17347942	-30.3051529	-0.31525066	-0.08550149	-0.37964311	5.450485229
F195	COMB3	2.5	-0.17347942	0.709216237	-0.31525066	-0.08550149	0.014420249	24.21099281
F195	COMB3	3.75	-0.17347942	31.72358513	-0.31525066	-0.08550149	0.408483595	3.67744422
F195	COMB3	5	-0.17347942	46.22671127	-0.31525066	-0.08550149	0.802546918	-47.5707855
F196	D	0	0.40757972	-43.1878166	0.000120852	-0.0341453	0.001219585	-43.4280281
F196	D	1.25	0.40757972	-30.5471954	0.000120852	-0.0341453	0.00106852	4.821070194
F196	D	2.5	0.40757972	-3.7753253	0.000120852	-0.0341453	0.000917455	26.49777603
F196	D	3.75	0.40757972	22.99654388	0.000120852	-0.0341453	0.00076639	14.2593832
F196	D	5	0.40757972	35.63716507	0.000120852	-0.0341453	0.000615325	-24.5514011
F196	L	0	0.042504448	-14.2162819	-0.00091348	0.004059279	-0.0013738	-14.2568359
F196	L	1.25	0.042504448	-10.3100319	-0.00091348	0.004059279	-0.00023196	1.885913134
F196	L	2.5	0.042504448	-1.09128129	-0.00091348	0.004059279	0.000909889	9.09636879
F196	L	3.75	0.042504448	8.127469063	-0.00091348	0.004059279	0.002051734	4.614116192
F196	L	5	0.042504448	12.03371906	-0.00091348	0.004059279	0.00319358	-8.80042839
F196	EX	0	-0.86955249	2.256838799	-0.22486952	0.002642139	-0.56831133	4.711684704
F196	EX	1.25	-0.86955249	2.256838799	-0.22486952	0.002642139	-0.28722444	1.890636086
F196	EX	2.5	-0.86955249	2.256838799	-0.22486952	0.002642139	-0.00613755	-0.93041241
F196	EX	3.75	-0.86955249	2.256838799	-0.22486952	0.002642139	0.274949342	-3.75146103
F196	EX	5	-0.86955249	2.256838799	-0.22486952	0.002642139	0.556036294	-6.57250929
F196	EY	0	-0.05118086	-0.01317236	-0.15498421	0.014762602	-0.38798046	-0.04171064
F196	EY	1.25	-0.05118086	-0.01317236	-0.15498421	0.014762602	-0.1942502	-0.02524519
F196	EY	2.5	-0.05118086	-0.01317236	-0.15498421	0.014762602	-0.00051993	-0.00877973
F196	EY	3.75	-0.05118086	-0.01317236	-0.15498421	0.014762602	0.193210348	0.007685719
F196	EY	5	-0.05118086	-0.01317236	-0.15498421	0.014762602	0.386940598	0.024151171
F196	COMB1	0	0.557102799	-74.5714264	-0.00131654	-0.03447951	-0.00073458	-74.9245682
F196	COMB1	1.25	0.557102799	-53.1526833	-0.00131654	-0.03447951	0.000911093	8.802744865
F196	COMB1	2.5	0.557102799	-6.27644062	-0.00131654	-0.03447951	0.002556768	46.35152054
F196	COMB1	3.75	0.557102799	40.59980392	-0.00131654	-0.03447951	0.004202443	24.49384689
F196	COMB1	5	0.557102799	62.01855087	-0.00131654	-0.03447951	0.005848118	-43.542366
F196	COMB2	0	-0.47476119	-47.4936562	-0.28172082	-0.02718906	-0.70956826	-45.2268753
F196	COMB2	1.25	-0.47476119	-32.9905357	-0.28172082	-0.02718906	-0.35741723	7.605042458
F196	COMB2	2.5	-0.47476119	-1.97616637	-0.28172082	-0.02718906	-0.0052662	29.72227859
F196	COMB2	3.75	-0.47476119	29.03820229	-0.28172082	-0.02718906	0.346884817	12.54545879
F196	COMB2	5	-0.47476119	43.54132462	-0.28172082	-0.02718906	0.699035883	-35.3460464
F196	COMB3	0	0.113698669	-49.1282616	-0.23372816	-0.01824089	-0.58554971	-48.6499481
F196	COMB3	1.25	0.113698669	-34.6251411	-0.23372816	-0.01824089	-0.29338953	6.225229263
F196	COMB3	2.5	0.113698669	-3.61077189	-0.23372816	-0.01824089	-0.00122931	30.38572121
F196	COMB3	3.75	0.113698669	27.40359688	-0.23372816	-0.01824089	0.290930897	15.25215912
F196	COMB3	5	0.113698669	41.90671921	-0.23372816	-0.01824089	0.58309114	-30.5960865
F197	D	0	4.906165123	23.07172394	-0.20036559	-12.333209	-0.31530219	63.01227188
F197	D	0.75	4.906165123	35.41204453	-0.20036559	-12.333209	-0.1650279	41.31464005
F197	D	1.5	4.906165123	51.49298859	-0.20036559	-12.333209	-0.01475363	8.959023476
F197	D	2.25	4.906165123	67.57393646	-0.20036559	-12.333209	0.135520652	-35.9248848
F197	D	3	4.906165123	79.91425323	-0.20036559	-12.333209	0.285794914	-91.4667816
F197	L	0	1.490674734	7.010986805	-0.03773503	-4.05682516	-0.04643982	13.21757126
F197	L	0.75	1.490674734	7.714111805	-0.03773503	-4.05682516	-0.01813853	7.783545971
F197	L	1.5	1.490674734	9.823488235	-0.03773503	-4.05682516	0.01016276	1.294833541
F197	L	2.25	1.490674734	11.93286419	-0.03773503	-4.05682516	0.038464051	-6.95169353
F197	L	3	1.490674734	12.63598919	-0.03773503	-4.05682516	0.066765338	-16.2529087
F197	EX	0	-0.40254071	-0.95682889	0.641119003	3.563637495	0.961263955	-1.81215215
F197	EX	0.75	-0.40254071	-0.95682889	0.641119003	3.563637495	0.480424404	-1.09453022
F197	EX	1.5	-0.40254071	-0.95682889	0.641119003	3.563637495	-0.00041513	-0.37690815
F197	EX	2.25	-0.40254071	-0.95682889	0.641119003	3.563637495	-0.48125467	0.340713888
F197	EX	3	-0.40254071	-0.95682889	0.641119003	3.563637495	-0.96209419	1.0583359
F197	EY	0	-24.6180973	17.27022171	-0.1668369	0.023563419	-0.18301202	4.376113415
F197	EY	0.75	-24.6180973	17.27022171	-0.1668369	0.023563419	-0.05788427	-8.57656002
F197	EY	1.5	-24.6180973	17.27022171	-0.1668369	0.023563419	0.067243472	-21.5292339
F197	EY	2.25	-24.6180973	17.27022171	-0.1668369	0.023563419	0.192371219	-34.4819069
F197	EY	3	-24.6180973	17.27022171	-0.1668369	0.023563419	0.317498952	-47.4345779
F197	COMB1	0	8.272478104	38.90364838	-0.30081475	-21.2907715	-0.45266634	96.76284027
F197	COMB1	0.75	8.272478104	54.8370285	-0.30081475	-21.2907715	-0.22705513	62.03124237
F197	COMB1	1.5	8.272478104	77.50917053	-0.30081475	-21.2907715	-0.00144394	12.82256126
F197	COMB1	2.25	8.272478104	100.1813049	-0.30081475	-21.2907715	0.224167258	-54.2325745
F197	COMB1	3	8.272478104	116.1146851	-0.30081475	-21.2907715	0.449778438	-135.764786
F197	COMB2	0	-2.5502944	30.88357353	0.388734162	-10.5319824	0.591563582	69.82932281
F197	COMB2	0.75	-2.5502944	44.06239319	0.388734162	-10.5319824	0.300012767	41.99773407

F197	COMB2	1.5	-2.5502944	61.61183929	0.388734162	-10.5319824	0.008461989	2.643038273
F197	COMB2	2.25	-2.5502944	79.1612854	0.388734162	-10.5319824	-0.2830888	-50.4200745
F197	COMB2	3	-2.5502944	92.34010315	0.388734162	-10.5319824	-0.57463956	-115.006302
F197	COMB3	0	-20.3547668	44.26610184	-0.19549665	-13.0804825	-0.2350603	74.35050964
F197	COMB3	0.75	-20.3547668	57.4449234	-0.19549665	-13.0804825	-0.08843774	36.48202515
F197	COMB3	1.5	-20.3547668	74.99436951	-0.19549665	-13.0804825	0.058184836	-12.9095745
F197	COMB3	2.25	-20.3547668	92.54381561	-0.19549665	-13.0804825	0.204807416	-76.0095901
F197	COMB3	3	-20.3547668	105.7226334	-0.19549665	-13.0804825	0.351429969	-150.632721
F198	D	0	8.620523453	48.29728317	-0.08912903	1.081780314	-0.15211937	92.05724335
F198	D	0.75	8.620523453	55.00791168	-0.08912903	1.081780314	-0.08527256	53.78535461
F198	D	1.5	8.620523453	69.19979095	-0.08912903	1.081780314	-0.01842575	7.675017834
F198	D	2.25	8.620523453	83.39167023	-0.08912903	1.081780314	0.048421059	-50.0143929
F198	D	3	8.620523453	90.10230255	-0.08912903	1.081780314	0.115267873	-115.542244
F198	L	0	3.10139513	15.62302589	-0.00544529	0.36358726	-0.0101281	28.88634872
F198	L	0.75	3.10139513	17.02927589	-0.00544529	0.36358726	-0.00604413	16.8175087
F198	L	1.5	3.10139513	21.2480278	-0.00544529	0.36358726	-0.00196016	2.639294386
F198	L	2.25	3.10139513	25.46678162	-0.00544529	0.36358726	0.002123801	-15.0545502
F198	L	3	3.10139513	26.87303162	-0.00544529	0.36358726	0.006207767	-34.857769
F198	EX	0	-0.40881205	0.790460467	0.503169179	4.327239037	0.650433719	0.801287115
F198	EX	0.75	-0.40881205	0.790460467	0.503169179	4.327239037	0.273056656	0.208441496
F198	EX	1.5	-0.40881205	0.790460467	0.503169179	4.327239037	-0.10432044	-0.38440412
F198	EX	2.25	-0.40881205	0.790460467	0.503169179	4.327239037	-0.48169753	-0.97724974
F198	EX	3	-0.40881205	0.790460467	0.503169179	4.327239037	-0.85907459	-1.57009542
F198	EY	0	-24.4625034	16.53118896	-0.44173655	-0.01190784	-0.44833335	4.243969917
F198	EY	0.75	-24.4625034	16.53118896	-0.44173655	-0.01190784	-0.11703078	-8.15442944
F198	EY	1.5	-24.4625034	16.53118896	-0.44173655	-0.01190784	0.214271784	-20.5528278
F198	EY	2.25	-24.4625034	16.53118896	-0.44173655	-0.01190784	0.545574367	-32.9512291
F198	EY	3	-24.4625034	16.53118896	-0.44173655	-0.01190784	0.876876891	-45.3496246
F198	COMB1	0	15.30685997	82.95358276	-0.11566729	1.879876018	-0.1987482	156.6868591
F198	COMB1	0.75	15.30685997	93.2563324	-0.11566729	1.879876018	-0.11199768	91.45043945
F198	COMB1	1.5	15.30685997	117.0365982	-0.11566729	1.879876018	-0.02524716	13.4328928
F198	COMB1	2.25	15.30685997	140.816864	-0.11566729	1.879876018	0.061503351	-84.1045532
F198	COMB1	3	15.30685997	151.1196136	-0.11566729	1.879876018	0.148253873	-194.423126
F198	COMB2	0	1.899679542	61.65885162	0.286332339	5.725340843	0.369058222	107.9254913
F198	COMB2	0.75	1.899679542	69.14797974	0.286332339	5.725340843	0.154308841	59.41923141
F198	COMB2	1.5	1.899679542	85.37836456	0.286332339	5.725340843	-0.06044053	2.018147469
F198	COMB2	2.25	1.899679542	101.6087418	0.286332339	5.725340843	-0.27518991	-68.6483841
F198	COMB2	3	1.899679542	109.0978775	0.286332339	5.725340843	-0.48993927	-148.209732
F198	COMB3	0	-15.7859163	73.24014282	-0.40062582	2.600976467	-0.42877907	110.4678802
F198	COMB3	0.75	-15.7859163	80.72927094	-0.40062582	2.600976467	-0.12830958	53.27564621
F198	COMB3	1.5	-15.7859163	96.95965576	-0.40062582	2.600976467	0.172159955	-12.81141
F198	COMB3	2.25	-15.7859163	113.1900406	-0.40062582	2.600976467	0.472629488	-92.1639175
F198	COMB3	3	-15.7859163	120.6791687	-0.40062582	2.600976467	0.773098946	-180.41124
F199	D	0	5.986414909	47.54258728	0.049651876	0.092606269	0.021673821	89.36819458
F199	D	0.75	5.986414909	54.25321579	0.049651876	0.092606269	-0.01556511	51.66232681
F199	D	1.5	5.986414909	68.44509125	0.049651876	0.092606269	-0.05280404	6.118014336
F199	D	2.25	5.986414909	82.63697815	0.049651876	0.092606269	-0.09004297	-51.0053711
F199	D	3	5.986414909	89.34760284	0.049651876	0.092606269	-0.12728189	-115.967201
F199	L	0	1.980785847	15.41621876	0.014215693	0.174635515	0.020342408	28.15022278
F199	L	0.75	1.980785847	16.82246971	0.014215693	0.174635515	0.009680633	16.23648834
F199	L	1.5	1.980785847	21.04122162	0.014215693	0.174635515	-0.00098114	2.213378191
F199	L	2.25	1.980785847	25.25997353	0.014215693	0.174635515	-0.01164292	-15.3253603
F199	L	3	1.980785847	26.66622543	0.014215693	0.174635515	-0.02230469	-34.9734764
F199	EX	0	-1.7019943	0.296560287	0.324732363	3.883870125	0.674056411	0.196753144
F199	EX	0.75	-1.7019943	0.296560287	0.324732363	3.883870125	0.430507004	-0.02566718
F199	EX	1.5	-1.7019943	0.296560287	0.324732363	3.883870125	0.186957598	-0.24808751
F199	EX	2.25	-1.7019943	0.296560287	0.324732363	3.883870125	-0.05659182	-0.47050783
F199	EX	3	-1.7019943	0.296560287	0.324732363	3.883870125	-0.30014125	-0.69292819
F199	EY	0	-29.383152	15.127882	-0.30039129	-0.02124757	-0.2987268	4.450321198
F199	EY	0.75	-29.383152	15.127882	-0.30039129	-0.02124757	-0.07343324	-6.89559746
F199	EY	1.5	-29.383152	15.127882	-0.30039129	-0.02124757	0.151860356	-18.2415161
F199	EY	2.25	-29.383152	15.127882	-0.30039129	-0.02124757	0.377153933	-29.5874329
F199	EY	3	-29.383152	15.127882	-0.30039129	-0.02124757	0.60244751	-40.9333496
F199	COMB1	0	10.35295486	81.71705627	0.082327358	0.390544355	0.058556437	152.2821808
F199	COMB1	0.75	10.35295486	92.01980591	0.082327358	0.390544355	-0.00318912	87.97317505
F199	COMB1	1.5	10.35295486	115.8000641	0.082327358	0.390544355	-0.06493467	10.88302231
F199	COMB1	2.25	10.35295486	139.5803375	0.082327358	0.390544355	-0.12668023	-85.7270203
F199	COMB1	3	10.35295486	149.8830872	0.082327358	0.390544355	-0.18842578	-195.118195
F199	COMB2	0	-4.10757351	59.84804916	0.29808715	4.165359497	0.632714808	104.3094177
F199	COMB2	0.75	-4.10757351	67.33717346	0.29808715	4.165359497	0.409149319	57.1612587
F199	COMB2	1.5	-4.10757351	83.56755829	0.29808715	4.165359497	0.185583815	1.118280888
F199	COMB2	2.25	-4.10757351	99.79794312	0.29808715	4.165359497	-0.03798168	-68.1901474
F199	COMB2	3	-4.10757351	107.2870636	0.29808715	4.165359497	-0.26154718	-146.393387
F199	COMB3	0	-24.478754	70.75351715	-0.15650773	1.353355885	-0.07217	107.438736
F199	COMB3	0.75	-24.478754	78.24264526	-0.15650773	1.353355885	0.045210849	52.1114769
F199	COMB3	1.5	-24.478754	94.47302246	-0.15650773	1.353355885	0.162591711	-12.11061
F199	COMB3	2.25	-24.478754	110.7034073	-0.15650773	1.353355885	0.279972583	-89.5981445
F199	COMB3	3	-24.478754	118.1925354	-0.15650773	1.353355885	0.397353441	-175.980499
F200	D	0	5.991398811	47.50629807	-0.05264753	-0.04532206	-0.02249421	89.31067657
F200	D	0.75	5.991398811	54.21692657	-0.05264753	-0.04532206	0.016991464	51.63202286
F200	D	1.5	5.991398811	68.40880585	-0.05264753	-0.04532206	0.056477137	6.114925861
F200	D	2.25	5.991398811	82.60069275	-0.05264753	-0.04532206	0.095962808	-50.9812431
F200	D	3	5.991398811	89.31130981	-0.05264753	-0.04532206	0.135448486	-115.915855
F200	L	0	2.082108736	15.5489378	-0.02312602	-0.25482401	-0.02787519	28.36531067

F200	L	0.75	2.082108736	16.95518875	-0.02312602	-0.25482401	-0.01053066	16.35203743
F200	L	1.5	2.082108736	21.17394066	-0.02312602	-0.25482401	0.006813862	2.229389191
F200	L	2.25	2.082108736	25.39269447	-0.02312602	-0.25482401	0.024158388	-15.4088898
F200	L	3	2.082108736	26.79894447	-0.02312602	-0.25482401	0.041502915	-35.1565437
F200	EX	0	1.662504792	-0.29424244	0.158900738	3.847731113	0.423029929	-0.18899794
F200	EX	0.75	1.662504792	-0.29424244	0.158900738	3.847731113	0.303854316	0.031684015
F200	EX	1.5	1.662504792	-0.29424244	0.158900738	3.847731113	0.184678674	0.252365977
F200	EX	2.25	1.662504792	-0.29424244	0.158900738	3.847731113	0.065503053	0.473047942
F200	EX	3	1.662504792	-0.29424244	0.158900738	3.847731113	-0.05367257	0.693729877
F200	EY	0	-29.3835487	15.12776089	0.300415695	0.021249462	0.298750818	4.450256348
F200	EY	0.75	-29.3835487	15.12776089	0.300415695	0.021249462	0.073438942	-6.89557076
F200	EY	1.5	-29.3835487	15.12776089	0.300415695	0.021249462	-0.15187296	-18.241396
F200	EY	2.25	-29.3835487	15.12776089	0.300415695	0.021249462	-0.37718487	-29.587225
F200	EY	3	-29.3835487	15.12776089	0.300415695	0.021249462	-0.60249674	-40.9330521
F200	COMB1	0	10.52105236	81.88585663	-0.10017868	-0.46210489	-0.07159336	152.557312
F200	COMB1	0.75	10.52105236	92.18861389	-0.10017868	-0.46210489	0.003540695	88.12168884
F200	COMB1	1.5	10.52105236	115.9688721	-0.10017868	-0.46210489	0.078674741	10.90493393
F200	COMB1	2.25	10.52105236	139.7491455	-0.10017868	-0.46210489	0.153808787	-85.8317184
F200	COMB1	3	10.52105236	150.0518799	-0.10017868	-0.46210489	0.228942841	-195.349503
F200	COMB2	0	-0.58829224	59.24023438	0.196528599	3.861237526	0.499542892	103.9174957
F200	COMB2	0.75	-0.58829224	66.72936249	0.196528599	3.861237526	0.352146357	57.22520447
F200	COMB2	1.5	-0.58829224	82.95973969	0.196528599	3.861237526	0.204749808	1.638088703
F200	COMB2	2.25	-0.58829224	99.19012451	0.196528599	3.861237526	0.057353273	-67.2144775
F200	COMB2	3	-0.58829224	106.6792526	0.196528599	3.861237526	-0.09004326	-144.961853
F200	COMB3	0	-23.3822041	70.57099152	0.302925617	1.106489539	0.414543211	107.3245163
F200	COMB3	0.75	-23.3822041	78.06011963	0.302925617	1.106489539	0.187348872	52.13414764
F200	COMB3	1.5	-23.3822041	94.29049683	0.302925617	1.106489539	-0.03984546	-11.9510412
F200	COMB3	2.25	-23.3822041	110.5208817	0.302925617	1.106489539	-0.26703981	-89.3016815
F200	COMB3	3	-23.3822041	118.0100098	0.302925617	1.106489539	-0.49423414	-175.547134
F201	D	0	8.690952301	48.47591019	0.080194652	-1.2276423	0.142169178	92.34580994
F201	D	0.75	8.690952301	55.1865387	0.080194652	-1.2276423	0.082023151	53.93994904
F201	D	1.5	8.690952301	69.37841797	0.080194652	-1.2276423	0.021877127	7.695641518
F201	D	2.25	8.690952301	83.57029724	0.080194652	-1.2276423	-0.0382689	-50.1277351
F201	D	3	8.690952301	90.28092194	0.080194652	-1.2276423	-0.09841492	-115.789558
F201	L	0	4.112185955	16.24378586	-0.0050945	-0.5283289	-0.00102212	34.37576675
F201	L	0.75	4.112185955	18.91566277	-0.0050945	-0.5283289	0.002798761	21.52495384
F201	L	1.5	4.112185955	26.93129158	-0.0050945	-0.5283289	0.006619641	4.666319847
F201	L	2.25	4.112185955	34.9469223	-0.0050945	-0.5283289	0.01044052	-18.8720074
F201	L	3	4.112185955	37.6187973	-0.0050945	-0.5283289	0.014261398	-46.4181519
F201	EX	0	0.295637846	-0.77531731	-0.00696842	4.28041172	-0.10908134	-0.78241771
F201	EX	0.75	0.295637846	-0.77531731	-0.00696842	4.28041172	-0.10385503	-0.20092936
F201	EX	1.5	0.295637846	-0.77531731	-0.00696842	4.28041172	-0.09862871	0.380558997
F201	EX	2.25	0.295637846	-0.77531731	-0.00696842	4.28041172	-0.09340239	0.962047279
F201	EX	3	0.295637846	-0.77531731	-0.00696842	4.28041172	-0.08817608	1.543535709
F201	EY	0	-24.4625301	16.53119278	0.44172436	0.011904829	0.448324651	4.243965626
F201	EY	0.75	-24.4625301	16.53119278	0.44172436	0.011904829	0.117031172	-8.15443611
F201	EY	1.5	-24.4625301	16.53119278	0.44172436	0.011904829	-0.21426228	-20.5528374
F201	EY	2.25	-24.4625301	16.53119278	0.44172436	0.011904829	-0.54555571	-32.9512405
F201	EY	3	-24.4625301	16.53119278	0.44172436	0.011904829	-0.87684917	-45.3496399
F201	COMB1	0	17.00864029	84.1611557	0.088082381	-2.31849694	0.168967634	165.8162079
F201	COMB1	0.75	17.00864029	96.48890686	0.088082381	-2.31849694	0.102905795	99.16786194
F201	COMB1	1.5	17.00864029	126.3441696	0.088082381	-2.31849694	0.036843978	16.70088196
F201	COMB1	2.25	17.00864029	156.1994324	0.088082381	-2.31849694	-0.02921784	-90.3484955
F201	COMB1	3	17.00864029	168.5271912	0.088082381	-2.31849694	-0.09527966	-213.216507
F201	COMB2	0	3.021126509	60.42137146	0.214530483	2.978528261	0.177278742	108.318512
F201	COMB2	0.75	3.021126509	68.30917358	0.214530483	2.978528261	0.016380779	60.64069748
F201	COMB2	1.5	3.021126509	85.73556519	0.214530483	2.978528261	-0.14451717	3.470048904
F201	COMB2	2.25	3.021126509	103.1619644	0.214530483	2.978528261	-0.30541512	-67.9627304
F201	COMB2	3	3.021126509	111.0497665	0.214530483	2.978528261	-0.46631306	-148.888336
F201	COMB3	0	-15.1716919	73.13002777	0.544215143	-0.09461822	0.58533591	112.0011673
F201	COMB3	0.75	-15.1716919	81.0178299	0.544215143	-0.09461822	0.177174315	54.79185486
F201	COMB3	1.5	-15.1716919	98.4442215	0.544215143	-0.09461822	-0.23098727	-11.9102898
F201	COMB3	2.25	-15.1716919	115.8706207	0.544215143	-0.09461822	-0.63914883	-92.8745651
F201	COMB3	3	-15.1716919	123.7584229	0.544215143	-0.09461822	-1.04731047	-183.331665
F202	D	0	6.36238575	23.94511223	0.190252692	12.10324097	0.305969328	71.05110931
F202	D	0.75	6.36238575	38.15574265	0.190252692	12.10324097	0.163279712	48.23086166
F202	D	1.5	6.36238575	59.84762955	0.190252692	12.10324097	0.02059014	11.94715691
F202	D	2.25	6.36238575	81.53951263	0.190252692	12.10324097	-0.12209944	-41.5406265
F202	D	3	6.36238575	95.75013733	0.190252692	12.10324097	-0.26478904	-108.491867
F202	L	0	3.068086386	8.055205345	0.030415941	4.00544405	0.040547248	21.87750244
F202	L	0.75	3.068086386	10.72708225	0.030415941	4.00544405	0.017735276	15.16812515
F202	L	1.5	3.068086386	18.74271011	0.030415941	4.00544405	-0.00507669	4.450931549
F202	L	2.25	3.068086386	26.75834084	0.030415941	4.00544405	-0.02788866	-12.9459572
F202	L	3	3.068086386	29.43021774	0.030415941	4.00544405	-0.05070063	-34.3506622
F202	EX	0	0.558947742	0.941293359	-0.25675681	3.527578592	-0.30873379	1.785385728
F202	EX	0.75	0.558947742	0.941293359	-0.25675681	3.527578592	-0.11616609	1.079415321
F202	EX	1.5	0.558947742	0.941293359	-0.25675681	3.527578592	0.076401621	0.373444885
F202	EX	2.25	0.558947742	0.941293359	-0.25675681	3.527578592	0.268969327	-0.33252555
F202	EX	3	0.558947742	0.941293359	-0.25675681	3.527578592	0.461537033	-1.03849602
F202	EY	0	-24.6180916	17.27023125	0.166834235	-0.02356333	0.18300724	4.376115799
F202	EY	0.75	-24.6180916	17.27023125	0.166834235	-0.02356333	0.057881493	-8.57656479
F202	EY	1.5	-24.6180916	17.27023125	0.166834235	-0.02356333	-0.06724425	-21.5292454
F202	EY	2.25	-24.6180916	17.27023125	0.166834235	-0.02356333	-0.19236998	-34.481926
F202	EY	3	-24.6180916	17.27023125	0.166834235	-0.02356333	-0.3174957	-47.4346046

F202	COMB1	0	12.54380131	41.62246323	0.276968718	20.93260002	0.432038784	120.2653427
F202	COMB1	0.75	12.54380131	62.95022202	0.276968718	20.93260002	0.224312112	82.14603424
F202	COMB1	1.5	12.54380131	101.8054886	0.276968718	20.93260002	0.01658546	21.45808029
F202	COMB1	2.25	12.54380131	140.6607666	0.276968718	20.93260002	-0.19114119	-70.5622864
F202	COMB1	3	12.54380131	161.9885101	0.276968718	20.93260002	-0.39886785	-185.151291
F202	COMB2	0	0.470764428	34.09412003	-0.00384417	17.61373901	0.072147965	84.72143555
F202	COMB2	0.75	0.470764428	49.85692215	-0.00384417	17.61373901	0.075031087	53.83594131
F202	COMB2	1.5	0.470764428	75.1583252	-0.00384417	17.61373901	0.077914223	7.551361561
F202	COMB2	2.25	0.470764428	100.4597321	-0.00384417	17.61373901	0.080797367	-58.9016037
F202	COMB2	3	0.470764428	116.2225266	-0.00384417	17.61373901	0.083680496	-140.753662
F202	COMB3	0	-18.0259743	46.11000824	0.303643882	15.05656433	0.428946614	86.65239716
F202	COMB3	0.75	-18.0259743	61.87281036	0.303643882	15.05656433	0.201213568	46.75498581
F202	COMB3	1.5	-18.0259743	87.17421722	0.303643882	15.05656433	-0.02651946	-8.5415144
F202	COMB3	2.25	-18.0259743	112.4756165	0.303643882	15.05656433	-0.25425249	-84.0064011
F202	COMB3	3	-18.0259743	128.2384186	0.303643882	15.05656433	-0.48198551	-174.870377
F203	D	0	7.217857361	-40.5789185	0.025541795	0.071078256	0.065077417	-30.2433014
F203	D	1.25	7.217857361	-26.138298	0.025541795	0.071078256	0.03315017	13.61967182
F203	D	2.5	7.217857361	2.433573246	0.025541795	0.071078256	0.001222927	28.66025543
F203	D	3.75	7.217857361	31.00544357	0.025541795	0.071078256	-0.03070432	7.535738468
F203	D	5	7.217857361	45.44606781	0.025541795	0.071078256	-0.06263156	-42.411171
F203	L	0	1.635238886	-12.1140862	0.002849091	0.030333459	0.003947666	-8.77624226
F203	L	1.25	1.635238886	-8.2078352	0.002849091	0.030333459	0.000386302	4.738760948
F203	L	2.5	1.635238886	1.010914445	0.002849091	0.030333459	-0.00317506	9.321472168
F203	L	3.75	1.635238886	10.22966385	0.002849091	0.030333459	-0.00673643	2.211475372
F203	L	5	1.635238886	14.1359148	0.002849091	0.030333459	-0.01029779	-13.8308153
F203	EX	0	-19.741396	19.46484947	-0.545012	0.007637606	-1.41690063	51.68316269
F203	EX	1.25	-19.741396	19.46484947	-0.545012	0.007637606	-0.73563564	27.35209846
F203	EX	2.5	-19.741396	19.46484947	-0.545012	0.007637606	-0.05437056	3.021037102
F203	EX	3.75	-19.741396	19.46484947	-0.545012	0.007637606	0.626894474	-21.3100243
F203	EX	5	-19.741396	19.46484947	-0.545012	0.007637606	1.308159471	-45.6410866
F203	EY	0	-0.11233743	0.040162172	0.236094877	0.083499402	0.661065757	0.103493877
F203	EY	1.25	-0.11233743	0.040162172	0.236094877	0.083499402	0.365947157	0.053291161
F203	EY	2.5	-0.11233743	0.040162172	0.236094877	0.083499402	0.070828564	0.003088441
F203	EY	3.75	-0.11233743	0.040162172	0.236094877	0.083499402	-0.22429001	-0.04711428
F203	EY	5	-0.11233743	0.040162172	0.236094877	0.083499402	-0.51940858	-0.097317
F203	COMB1	0	11.27781105	-68.07724	0.035208702	0.133827433	0.08440917	-50.33395
F203	COMB1	1.25	11.27781105	-44.4984932	0.035208702	0.133827433	0.040398289	23.92562485
F203	COMB1	2.5	11.27781105	4.537751198	0.035208702	0.133827433	-0.00361259	49.30666351
F203	COMB1	3.75	11.27781105	53.57399368	0.035208702	0.133827433	-0.04762346	12.58124638
F203	COMB1	5	11.27781105	77.15274811	0.035208702	0.133827433	-0.09163434	-73.0227051
F203	COMB2	0	-12.3738813	-26.2650337	-0.46200117	0.118394442	-1.18868172	19.00468826
F203	COMB2	1.25	-12.3738813	-9.87191105	-0.46200117	0.118394442	-0.61118019	44.1195755
F203	COMB2	2.5	-12.3738813	23.03245926	-0.46200117	0.118394442	-0.0336786	36.15727615
F203	COMB2	3.75	-12.3738813	55.93682861	-0.46200117	0.118394442	0.543822944	-13.4615755
F203	COMB2	5	-12.3738813	72.32995605	-0.46200117	0.118394442	1.12132442	-96.1576157
F203	COMB3	0	1.757355928	-40.250206	0.103937186	0.174267426	0.317370147	-18.1311188
F203	COMB3	1.25	1.757355928	-23.8570824	0.103937186	0.174267426	0.187448651	24.46523285
F203	COMB3	2.5	1.757355928	9.047287941	0.103937186	0.174267426	0.057527199	33.9844017
F203	COMB3	3.75	1.757355928	41.95165634	0.103937186	0.174267426	-0.07239426	1.84701252
F203	COMB3	5	1.757355928	58.34477997	0.103937186	0.174267426	-0.20231575	-63.3675613
F204	D	0	9.014562607	-41.7914543	-0.01455452	0.06967058	-0.04275667	-40.1918869
F204	D	1.25	9.014562607	-27.3508339	-0.01455452	0.06967058	-0.02456352	5.186758041
F204	D	2.5	9.014562607	1.221036315	-0.01455452	0.06967058	-0.00637036	21.74301338
F204	D	3.75	9.014562607	29.79290771	-0.01455452	0.06967058	0.011822786	2.134167194
F204	D	5	9.014562607	44.23352814	-0.01455452	0.06967058	0.030015938	-46.2970695
F204	L	0	0.979073524	-12.3626032	-0.01536308	0.02496355	-0.0384951	-11.702796
F204	L	1.25	0.979073524	-8.45635223	-0.01536308	0.02496355	-0.01929125	2.122853518
F204	L	2.5	0.979073524	0.762397885	-0.01536308	0.02496355	-8.7399E-05	7.016211033
F204	L	3.75	0.979073524	9.981147766	-0.01536308	0.02496355	0.019116452	0.216858968
F204	L	5	0.979073524	13.88739777	-0.01536308	0.02496355	0.038320303	-15.5147858
F204	EX	0	-17.4691486	16.053442	-0.56810039	-0.00759811	-1.36734962	40.28926086
F204	EX	1.25	-17.4691486	16.053442	-0.56810039	-0.00759811	-0.65722412	20.22245789
F204	EX	2.5	-17.4691486	16.053442	-0.56810039	-0.00759811	0.052901357	0.155657411
F204	EX	3.75	-17.4691486	16.053442	-0.56810039	-0.00759811	0.763026834	-19.9111462
F204	EX	5	-17.4691486	16.053442	-0.56810039	-0.00759811	1.473152399	-39.9779472
F204	EY	0	-0.2056309	0.029383952	0.485215843	0.250091136	1.180393219	0.06996464
F204	EY	1.25	-0.2056309	0.029383952	0.485215843	0.250091136	0.573873401	0.033234701
F204	EY	2.5	-0.2056309	0.029383952	0.485215843	0.250091136	-0.03264646	-0.00349524
F204	EY	3.75	-0.2056309	0.029383952	0.485215843	0.250091136	-0.6391663	-0.04022518
F204	EY	5	-0.2056309	0.029383952	0.485215843	0.250091136	-1.24568617	-0.07695512
F204	COMB1	0	12.38399315	-69.9299088	-0.04204635	0.123546369	-0.11290016	-66.9547348
F204	COMB1	1.25	12.38399315	-46.3511658	-0.04204635	0.123546369	-0.06034222	9.620675087
F204	COMB1	2.5	12.38399315	2.685080051	-0.04204635	0.123546369	-0.00778427	37.31755447
F204	COMB1	3.75	12.38399315	51.72132492	-0.04204635	0.123546369	0.044773668	2.907974958
F204	COMB1	5	12.38399315	75.30007172	-0.04204635	0.123546369	0.097331613	-80.3801422
F204	COMB2	0	-8.37164402	-31.1506805	-0.45526254	0.151932284	-1.10040355	-4.16644001
F204	COMB2	1.25	-8.37164402	-14.7575598	-0.45526254	0.151932284	-0.53132528	27.05550766
F204	COMB2	2.5	-8.37164402	18.14681053	-0.45526254	0.151932284	0.037752856	25.20027542
F204	COMB2	3.75	-8.37164402	51.05118179	-0.45526254	0.151932284	0.606831014	-18.3115196
F204	COMB2	5	-8.37164402	67.44430542	-0.45526254	0.151932284	1.175909162	-94.9004974
F204	COMB3	0	4.055004597	-42.687561	0.310403407	0.341219902	0.751677215	-33.1232834
F204	COMB3	1.25	4.055004597	-26.2944393	0.310403407	0.341219902	0.363673002	12.51976585
F204	COMB3	2.5	4.055004597	6.609930515	0.310403407	0.341219902	-0.02433127	25.08563232
F204	COMB3	3.75	4.055004597	39.5143013	0.310403407	0.341219902	-0.41233554	-4.00506115

F204	COMB3	5	4.055004597	55.90742111	0.310403407	0.341219902	-0.80033982	-66.1729355
F205	D	0	2.631430626	-42.9558945	-0.00038131	0.000213013	0.04244297	-41.567585
F205	D	1.25	2.631430626	-28.5152683	-0.00038131	0.000213013	0.042919606	5.266605854
F205	D	2.5	2.631430626	0.056601398	-0.00038131	0.000213013	0.043396242	23.27840424
F205	D	3.75	2.631430626	28.62847137	-0.00038131	0.000213013	0.043872878	5.125102043
F205	D	5	2.631430626	43.06909561	-0.00038131	0.000213013	0.044349518	-41.8505898
F205	L	0	-2.0863564	-13.0350151	-0.00040221	0.001564561	0.000208562	-12.6327591
F205	L	1.25	-2.0863564	-9.12876415	-0.00040221	0.001564561	0.00071132	2.033406019
F205	L	2.5	-2.0863564	0.089985423	-0.00040221	0.001564561	0.001214078	7.767278194
F205	L	3.75	-2.0863564	9.308735847	-0.00040221	0.001564561	0.001716836	1.808442235
F205	L	5	-2.0863564	13.21498585	-0.00040221	0.001564561	0.002219594	-13.0826864
F205	EX	0	-10.8683004	16.29864311	-0.29174808	0.069125161	-0.72973943	40.80682373
F205	EX	1.25	-10.8683004	16.29864311	-0.29174808	0.069125161	-0.36505428	20.43351746
F205	EX	2.5	-10.8683004	16.29864311	-0.29174808	0.069125161	-0.00036916	0.060212575
F205	EX	3.75	-10.8683004	16.29864311	-0.29174808	0.069125161	0.364315957	-20.3130913
F205	EX	5	-10.8683004	16.29864311	-0.29174808	0.069125161	0.729001045	-40.6863976
F205	EY	0	-0.3007293	-1.3815E-06	-3.4375E-05	8.16166E-06	-0.14997916	0.038539845
F205	EY	1.25	-0.3007293	-1.3815E-06	-3.4375E-05	8.16166E-06	-0.14993618	0.038541574
F205	EY	2.5	-0.3007293	-1.3815E-06	-3.4375E-05	8.16166E-06	-0.14989322	0.038543303
F205	EY	3.75	-0.3007293	-1.3815E-06	-3.4375E-05	8.16166E-06	-0.14985026	0.038545024
F205	EY	5	-0.3007293	-1.3815E-06	-3.4375E-05	8.16166E-06	-0.14980727	0.038546752
F205	COMB1	0	-0.18045364	-72.4030991	-0.0011011	0.002758913	0.051265262	-70.0935135
F205	COMB1	1.25	-0.18045364	-48.8243446	-0.0011011	0.002758913	0.052641641	9.573376656
F205	COMB1	2.5	-0.18045364	0.211898357	-0.0011011	0.002758913	0.054018017	40.36172867
F205	COMB1	3.75	-0.18045364	49.24814224	-0.0011011	0.002758913	0.055394392	9.0436306
F205	COMB1	5	-0.18045364	72.82688904	-0.0011011	0.002758913	0.056770772	-71.1530075
F205	COMB2	0	-9.23762131	-32.3406219	-0.30249718	0.072263613	-0.75789291	-5.37808084
F205	COMB2	1.25	-9.23762131	-15.9474974	-0.30249718	0.072263613	-0.37977141	27.33128929
F205	COMB2	2.5	-9.23762131	16.95687103	-0.30249718	0.072263613	-0.00164996	26.96347809
F205	COMB2	3.75	-9.23762131	49.8612442	-0.30249718	0.072263613	0.37647149	-15.0608912
F205	COMB2	5	-9.23762131	66.25436401	-0.30249718	0.072263613	0.754592955	-90.1624451
F205	COMB3	0	-1.63348067	-44.0756454	-0.09246381	0.022499496	-0.3427152	-34.7306671
F205	COMB3	1.25	-1.63348067	-27.6825218	-0.09246381	0.022499496	-0.22713545	12.64748573
F205	COMB3	2.5	-1.63348067	5.221848011	-0.09246381	0.022499496	-0.11155568	26.9484539
F205	COMB3	3.75	-1.63348067	38.12621689	-0.09246381	0.022499496	0.004024075	-0.40713492
F205	COMB3	5	-1.63348067	54.51934052	-0.09246381	0.022499496	0.11960385	-60.8399086
F206	D	0	8.931620598	-44.0492516	0.012372362	-0.06675971	0.02507397	-45.9334869
F206	D	1.25	8.931620598	-29.608633	0.012372362	-0.06675971	0.009608516	2.267407179
F206	D	2.5	8.931620598	-1.03676176	0.012372362	-0.06675971	-0.00585694	21.64591026
F206	D	3.75	8.931620598	27.53510666	0.012372362	-0.06675971	-0.02132239	4.859311581
F206	D	5	8.931620598	41.9757309	0.012372362	-0.06675971	-0.03678784	-40.7496796
F206	L	0	1.017650962	-14.0214367	0.018536044	-0.00151428	0.046287499	-15.894989
F206	L	1.25	1.017650962	-10.1151876	0.018536044	-0.00151428	0.023117442	0.004203203
F206	L	2.5	1.017650962	-0.89643699	0.018536044	-0.00151428	-5.2615E-05	6.971103668
F206	L	3.75	1.017650962	8.322313309	0.018536044	-0.00151428	-0.02322267	2.245295763
F206	L	5	1.017650962	12.22856331	0.018536044	-0.00151428	-0.04639273	-11.4128046
F206	EX	0	-4.43221664	15.90041065	-0.57242018	-0.0079369	-1.48191202	39.60654068
F206	EX	1.25	-4.43221664	15.90041065	-0.57242018	-0.0079369	-0.76638675	19.7310257
F206	EX	2.5	-4.43221664	15.90041065	-0.57242018	-0.0079369	-0.05086147	-0.14448825
F206	EX	3.75	-4.43221664	15.90041065	-0.57242018	-0.0079369	0.664663792	-20.0200024
F206	EX	5	-4.43221664	15.90041065	-0.57242018	-0.0079369	1.380189061	-39.8955154
F206	EY	0	-0.20563315	-0.02938683	-0.48519048	-0.25010043	-1.24561274	-0.07696273
F206	EY	1.25	-0.20563315	-0.02938683	-0.48519048	-0.25010043	-0.63912457	-0.04022919
F206	EY	2.5	-0.20563315	-0.02938683	-0.48519048	-0.25010043	-0.03263646	-0.00349564
F206	EY	3.75	-0.20563315	-0.02938683	-0.48519048	-0.25010043	0.573851645	0.033237901
F206	EY	5	-0.20563315	-0.02938683	-0.48519048	-0.25010043	1.180339694	0.069971442
F206	COMB1	0	12.34618664	-75.2934036	0.044504505	-0.0825345	0.10414876	-80.5521698
F206	COMB1	1.25	12.34618664	-51.7146606	0.044504505	-0.0825345	0.048518125	2.727613688
F206	COMB1	2.5	12.34618664	-2.67841315	0.044504505	-0.0825345	-0.00711251	37.12885666
F206	COMB1	3.75	12.34618664	46.35783005	0.044504505	-0.0825345	-0.06274314	9.423646927
F206	COMB1	5	12.34618664	69.93657684	0.044504505	-0.0825345	-0.11837377	-67.1601028
F206	COMB2	0	5.046643257	-34.2207985	-0.72646004	-0.15757102	-1.88523865	-12.2685575
F206	COMB2	1.25	5.046643257	-17.8276806	-0.72646004	-0.15757102	-0.97716355	22.79104042
F206	COMB2	2.5	5.046643257	15.07669067	-0.72646004	-0.15757102	-0.06908846	24.77345657
F206	COMB2	3.75	5.046643257	47.98106003	-0.72646004	-0.15757102	0.838986635	-14.9006872
F206	COMB2	5	5.046643257	64.37418365	-0.72646004	-0.15757102	1.747061729	-87.6520157
F206	COMB3	0	8.086698532	-45.6906967	-0.67093253	-0.33568028	-1.73378742	-40.841835
F206	COMB3	1.25	8.086698532	-29.297575	-0.67093253	-0.33568028	-0.89512169	8.55513382
F206	COMB3	2.5	8.086698532	3.606795788	-0.67093253	-0.33568028	-0.05645601	24.87491798
F206	COMB3	3.75	8.086698532	36.51116562	-0.67093253	-0.33568028	0.782209694	-0.46185556
F206	COMB3	5	8.086698532	52.90428543	-0.67093253	-0.33568028	1.620875359	-58.8758125
F207	D	0	7.129927158	-45.689045	-0.02035753	-0.03856684	-0.04914757	-43.067482
F207	D	1.25	7.129927158	-31.2484226	-0.02035753	-0.03856684	-0.02370066	7.183151722
F207	D	2.5	7.129927158	-2.67655158	-0.02035753	-0.03856684	0.001746249	28.61139107
F207	D	3.75	7.129927158	25.89531898	-0.02035753	-0.03856684	0.027193161	13.87453079
F207	D	5	7.129927158	40.33594131	-0.02035753	-0.03856684	0.052640073	-29.684721
F207	L	0	1.66914475	-14.0998154	-0.00143382	-0.01595773	-0.00696796	-13.7032833
F207	L	1.25	1.66914475	-10.1935644	-0.00143382	-0.01595773	-0.00517568	2.293882132
F207	L	2.5	1.66914475	-0.97481453	-0.00143382	-0.01595773	-0.00338341	9.358755112
F207	L	3.75	1.66914475	8.243935585	-0.00143382	-0.01595773	-0.00159113	4.730918407
F207	L	5	1.66914475	12.15018559	-0.00143382	-0.01595773	0.000201151	-8.82920933
F207	EX	0	-3.38873577	19.21831703	-0.56839544	0.007163879	-1.35097313	45.09793091
F207	EX	1.25	-3.38873577	19.21831703	-0.56839544	0.007163879	-0.64047885	21.075037
F207	EX	2.5	-3.38873577	19.21831703	-0.56839544	0.007163879	0.070015498	-2.94786

F207	EX	3.75	-3.38873577	19.21831703	-0.56839544	0.007163879	0.78050983	-26.9707565
F207	EX	5	-3.38873577	19.21831703	-0.56839544	0.007163879	1.491004229	-50.9936523
F207	EY	0	-0.11233649	-0.04016527	-0.23609278	-0.08349929	-0.51940709	-0.09732395
F207	EY	1.25	-0.11233649	-0.04016527	-0.23609278	-0.08349929	-0.22429112	-0.04711736
F207	EY	2.5	-0.11233649	-0.04016527	-0.23609278	-0.08349929	0.070824854	0.003089224
F207	EY	3.75	-0.11233649	-0.04016527	-0.23609278	-0.08349929	0.365940839	0.053295814
F207	EY	5	-0.11233649	-0.04016527	-0.23609278	-0.08349929	0.661056817	0.1035024
F207	COMB1	0	11.22654438	-77.3865585	-0.02672315	-0.07181256	-0.07012583	-73.6062317
F207	COMB1	1.25	11.22654438	-53.8078117	-0.02672315	-0.07181256	-0.03672189	12.28999329
F207	COMB1	2.5	11.22654438	-4.77156544	-0.02672315	-0.07181256	-0.00331795	49.30767822
F207	COMB1	3.75	11.22654438	44.26467896	-0.02672315	-0.07181256	0.030085988	24.2189064
F207	COMB1	5	11.22654438	67.84342957	-0.02672315	-0.07181256	0.063489929	-49.7484016
F207	COMB2	0	4.4694767	-32.5366325	-0.68448555	-0.06440952	-1.61567032	-2.8916862
F207	COMB2	1.25	4.4694767	-16.1435089	-0.68448555	-0.06440952	-0.76006335	30.06270409
F207	COMB2	2.5	4.4694767	16.76086044	-0.68448555	-0.06440952	0.095543653	29.93990707
F207	COMB2	3.75	4.4694767	49.66523361	-0.68448555	-0.06440952	0.951150656	-11.839448
F207	COMB2	5	4.4694767	66.05835724	-0.68448555	-0.06440952	1.806757689	-86.6959839
F207	COMB3	0	6.826799393	-46.4033432	-0.44876903	-0.1309395	-1.0247339	-35.4337311
F207	COMB3	1.25	6.826799393	-30.0102196	-0.44876903	-0.1309395	-0.46377257	14.85404587
F207	COMB3	2.5	6.826799393	2.894150734	-0.44876903	-0.1309395	0.097188771	32.06463623
F207	COMB3	3.75	6.826799393	35.79852295	-0.44876903	-0.1309395	0.658150077	7.618669033
F207	COMB3	5	6.826799393	52.19164276	-0.44876903	-0.1309395	1.219111443	-49.90448
F208	D	0	4.730803013	-75.2403717	0.334355384	12.40668774	0.536431193	-86.9102325
F208	D	0.75	4.730803013	-62.9000626	0.334355384	12.40668774	0.285664707	-34.8737946
F208	D	1.5	4.730803013	-46.8191299	0.334355384	12.40668774	0.034898266	6.504680157
F208	D	2.25	4.730803013	-30.7381973	0.334355384	12.40668774	-0.21586819	35.35487747
F208	D	3	4.730803013	-18.3978901	0.334355384	12.40668774	-0.46663466	53.54712296
F208	L	0	1.397345901	-11.6833982	0.019956976	4.307399273	0.025419828	-15.326827
F208	L	0.75	1.397345901	-10.9802732	0.019956976	4.307399273	0.0104521	-6.74006319
F208	L	1.5	1.397345901	-8.8708992	0.019956976	4.307399273	-0.00451563	0.792014956
F208	L	2.25	1.397345901	-6.7615242	0.019956976	4.307399273	-0.01948335	6.566281319
F208	L	3	1.397345901	-6.05839968	0.019956976	4.307399273	-0.03445108	11.28586102
F208	EX	0	-0.82439238	1.468222141	-0.04503502	-3.29480195	0.704780698	2.587928057
F208	EX	0.75	-0.82439238	1.468222141	-0.04503502	-3.29480195	0.738556981	1.486761808
F208	EX	1.5	-0.82439238	1.468222141	-0.04503502	-3.29480195	0.772333205	0.38559556
F208	EX	2.25	-0.82439238	1.468222141	-0.04503502	-3.29480195	0.806109488	-0.71557075
F208	EX	3	-0.82439238	1.468222141	-0.04503502	-3.29480195	0.839885771	-1.81673717
F208	EY	0	-20.7709045	13.84659958	-0.17295587	-0.00824672	-0.32416546	41.09759903
F208	EY	0.75	-20.7709045	13.84659958	-0.17295587	-0.00824672	-0.19444859	30.7126503
F208	EY	1.5	-20.7709045	13.84659958	-0.17295587	-0.00824672	-0.06473172	20.32770538
F208	EY	2.25	-20.7709045	13.84659958	-0.17295587	-0.00824672	0.064985156	9.942757607
F208	EY	3	-20.7709045	13.84659958	-0.17295587	-0.00824672	0.194702029	-0.44218898
F208	COMB1	0	7.912716866	-108.98188	0.433157623	21.77986526	0.684389114	-128.815201
F208	COMB1	0.75	7.912716866	-93.0485153	0.433157623	21.77986526	0.359521031	-52.6326523
F208	COMB1	1.5	7.912716866	-70.3763962	0.433157623	21.77986526	0.034652915	9.072840691
F208	COMB1	2.25	7.912716866	-47.704277	0.433157623	21.77986526	-0.29021519	52.93190384
F208	COMB1	3	7.912716866	-31.7709064	0.433157623	21.77986526	-0.61508334	82.31391907
F208	COMB2	0	-1.98857379	-76.8013763	0.25626725	10.97113609	1.198595881	-80.4594421
F208	COMB2	0.75	-1.98857379	-63.6225624	0.25626725	10.97113609	1.006395578	-27.5273209
F208	COMB2	1.5	-1.98857379	-46.0731316	0.25626725	10.97113609	0.814195156	13.88171768
F208	COMB2	2.25	-1.98857379	-28.5236988	0.25626725	10.97113609	0.621994793	41.5823555
F208	COMB2	3	-1.98857379	-15.3448906	0.25626725	10.97113609	0.429794401	57.75991058
F208	COMB3	0	-16.6616249	-67.6812439	0.161569908	13.33733177	0.452892184	-52.1160164
F208	COMB3	0.75	-16.6616249	-54.50243	0.161569908	13.33733177	0.331714809	-6.02399111
F208	COMB3	1.5	-16.6616249	-36.9529991	0.161569908	13.33733177	0.210537419	28.54495049
F208	COMB3	2.25	-16.6616249	-19.4035683	0.161569908	13.33733177	0.089360051	49.40549068
F208	COMB3	3	-16.6616249	-6.22476006	0.161569908	13.33733177	-0.03181735	58.74295425
F209	D	0	7.971649647	-83.731514	0.211335897	-1.47562051	0.348820508	-108.674355
F209	D	0.75	7.971649647	-77.0208893	0.211335897	-1.47562051	0.190318629	-47.9246407
F209	D	1.5	7.971649647	-62.8290215	0.211335897	-1.47562051	0.031816766	4.986641407
F209	D	2.25	7.971649647	-48.6371536	0.211335897	-1.47562051	-0.1266851	46.31886673
F209	D	3	7.971649647	-41.9265289	0.211335897	-1.47562051	-0.28518698	79.81266022
F209	L	0	2.919139862	-25.0886269	0.001597502	-0.48464441	0.004399005	-33.2248306
F209	L	0.75	2.919139862	-23.6823788	0.001597502	-0.48464441	0.003200879	-14.7599287
F209	L	1.5	2.919139862	-19.4636288	0.001597502	-0.48464441	0.002002753	1.595599294
F209	L	2.25	2.919139862	-15.2448807	0.001597502	-0.48464441	0.000804627	14.43550491
F209	L	3	2.919139862	-13.8386307	0.001597502	-0.48464441	-0.0003935	25.16603851
F209	EX	0	-0.34887883	-0.25689679	0.957619667	-4.2025733	2.071886063	-0.07990959
F209	EX	0.75	-0.34887883	-0.25689679	0.957619667	-4.2025733	1.353671432	0.112762943
F209	EX	1.5	-0.34887883	-0.25689679	0.957619667	-4.2025733	0.63545692	0.305435479
F209	EX	2.25	-0.34887883	-0.25689679	0.957619667	-4.2025733	-0.0827576	0.498108029
F209	EX	3	-0.34887883	-0.25689679	0.957619667	-4.2025733	-0.8009721	0.69078058
F209	EY	0	-20.6510162	13.22256279	-0.47911373	-0.0146576	-0.91308343	39.22994232
F209	EY	0.75	-20.6510162	13.22256279	-0.47911373	-0.0146576	-0.55374825	29.31302452
F209	EY	1.5	-20.6510162	13.22256279	-0.47911373	-0.0146576	-0.19441304	19.39610672
F209	EY	2.25	-20.6510162	13.22256279	-0.47911373	-0.0146576	0.164922163	9.479188919
F209	EY	3	-20.6510162	13.22256279	-0.47911373	-0.0146576	0.524257362	-0.43773079
F209	COMB1	0	14.23660278	-140.619614	0.256159067	-2.54617572	0.425623	-183.568954
F209	COMB1	0.75	14.23660278	-130.316879	0.256159067	-2.54617572	0.233503774	-81.1254501
F209	COMB1	1.5	14.23660278	-106.536636	0.256159067	-2.54617572	0.041384522	8.536928177
F209	COMB1	2.25	14.23660278	-82.7563934	0.256159067	-2.54617572	-0.15073472	78.67945099
F209	COMB1	3	14.23660278	-72.4536438	0.256159067	-2.54617572	-0.34285396	136.0408478
F209	COMB2	0	2.423601151	-91.9217834	1.062621355	-6.05634499	2.224427938	-112.299171
F209	COMB2	0.75	2.423601151	-84.432663	1.062621355	-6.05634499	1.427462101	-45.6199379

F209	COMB2	1.5	2.423601151	-68.202301	1.062621355	-6.05634499	0.630496264	12.16448689
F209	COMB2	2.25	2.423601151	-51.9719276	1.062621355	-6.05634499	-0.16646953	56.68347931
F209	COMB2	3	2.423601151	-44.4828072	1.062621355	-6.05634499	-0.96343535	92.30766296
F209	COMB3	0	-12.5037031	-82.0182343	0.020986672	-3.04126549	0.061553687	-83.4076233
F209	COMB3	0.75	-12.5037031	-74.5291138	0.020986672	-3.04126549	0.045813706	-24.1560516
F209	COMB3	1.5	-12.5037031	-58.298748	0.020986672	-3.04126549	0.030073704	26.2007122
F209	COMB3	2.25	-12.5037031	-42.0683784	0.020986672	-3.04126549	0.014333727	63.29204559
F209	COMB3	3	-12.5037031	-34.5792542	0.020986672	-3.04126549	-0.00140629	91.48857117
F210	D	0	5.120576859	-81.6772537	0.094120614	-0.1691335	0.186099321	-106.059059
F210	D	0.75	5.120576859	-74.9666367	0.094120614	-0.1691335	0.115508884	-46.8500366
F210	D	1.5	5.120576859	-60.774765	0.094120614	-0.1691335	0.044918448	4.520551682
F210	D	2.25	5.120576859	-46.5828972	0.094120614	-0.1691335	-0.02567199	44.31208801
F210	D	3	5.120576859	-39.8722725	0.094120614	-0.1691335	-0.09626243	76.26519012
F210	L	0	1.827345014	-24.4871941	-0.01618692	-0.15643881	-0.02214273	-32.4971924
F210	L	0.75	1.827345014	-23.0809441	-0.01618692	-0.15643881	-0.01000254	-14.4833651
F210	L	1.5	1.827345014	-18.862196	-0.01618692	-0.15643881	0.002137653	1.421088457
F210	L	2.25	1.827345014	-14.643446	-0.01618692	-0.15643881	0.014277844	13.8099184
F210	L	3	1.827345014	-13.237196	-0.01618692	-0.15643881	0.026418034	24.08937645
F210	EX	0	-1.49297738	0.329500049	1.137901187	-3.79475164	2.154691219	0.872196317
F210	EX	0.75	-1.49297738	0.329500049	1.137901187	-3.79475164	1.301265717	0.625071347
F210	EX	1.5	-1.49297738	0.329500049	1.137901187	-3.79475164	0.447840065	0.377946377
F210	EX	2.25	-1.49297738	0.329500049	1.137901187	-3.79475164	-0.40558559	0.130821407
F210	EX	3	-1.49297738	0.329500049	1.137901187	-3.79475164	-1.25901127	-0.11630356
F210	EY	0	-23.6329784	11.50732136	-0.31822231	-0.01542926	-0.61992019	33.97771454
F210	EY	0.75	-23.6329784	11.50732136	-0.31822231	-0.01542926	-0.38125351	25.34722519
F210	EY	1.5	-23.6329784	11.50732136	-0.31822231	-0.01542926	-0.14258684	16.71673775
F210	EY	2.25	-23.6329784	11.50732136	-0.31822231	-0.01542926	0.096079834	8.086249352
F210	EY	3	-23.6329784	11.50732136	-0.31822231	-0.01542926	0.33474651	-0.5442394
F210	COMB1	0	9.068444252	-137.192215	0.087045655	-0.4532623	0.187890813	-179.266373
F210	COMB1	0.75	9.068444252	-126.889473	0.087045655	-0.4532623	0.122606605	-79.393425
F210	COMB1	1.5	9.068444252	-103.10923	0.087045655	-0.4532623	0.057322383	7.698403358
F210	COMB1	2.25	9.068444252	-79.3289871	0.087045655	-0.4532623	-0.00796183	75.27037048
F210	COMB1	3	9.068444252	-69.0262451	0.087045655	-0.4532623	-0.07324605	130.0612183
F210	COMB2	0	-3.03740001	-89.5087509	1.171215534	-4.15929651	2.223259926	-109.99292
F210	COMB2	0.75	-3.03740001	-82.0196228	1.171215534	-4.15929651	1.344848633	-45.1234703
F210	COMB2	1.5	-3.03740001	-65.7892532	1.171215534	-4.15929651	0.46643734	10.85116863
F210	COMB2	2.25	-3.03740001	-49.5588875	1.171215534	-4.15929651	-0.41197398	53.56038284
F210	COMB2	3	-3.03740001	-42.069767	1.171215534	-4.15929651	-1.29038537	87.37478638
F210	COMB3	0	-19.332695	-81.2881088	0.118033215	-1.43841588	0.216240913	-85.6472855
F210	COMB3	0.75	-19.332695	-73.7989807	0.118033215	-1.43841588	0.12771605	-26.9433136
F210	COMB3	1.5	-19.332695	-57.568615	0.118033215	-1.43841588	0.039191172	22.86585045
F210	COMB3	2.25	-19.332695	-41.3382454	0.118033215	-1.43841588	-0.0493337	59.40958405
F210	COMB3	3	-19.332695	-33.8491249	0.118033215	-1.43841588	-0.13785858	87.05850983
F211	D	0	5.122698307	-81.644989	-0.09100305	0.122409597	-0.17869793	-106.012329
F211	D	0.75	5.122698307	-74.9343719	-0.09100305	0.122409597	-0.11044566	-46.8275108
F211	D	1.5	5.122698307	-60.7425041	-0.09100305	0.122409597	-0.04219339	4.518877506
F211	D	2.25	5.122698307	-46.5506325	-0.09100305	0.122409597	0.026058881	44.28621292
F211	D	3	5.122698307	-39.8400116	-0.09100305	0.122409597	0.094311148	76.21511841
F211	L	0	1.922528744	-24.5904541	0.01896202	0.220368773	0.028441453	-32.6642303
F211	L	0.75	1.922528744	-23.1842022	0.01896202	0.220368773	0.014219943	-14.572958
F211	L	1.5	1.922528744	-18.965456	0.01896202	0.220368773	-1.5691E-06	1.408939362
F211	L	2.25	1.922528744	-14.746706	0.01896202	0.220368773	-0.01422308	13.87521458
F211	L	3	1.922528744	-13.340457	0.01896202	0.220368773	-0.02844459	24.2321167
F211	EX	0	1.451875091	-0.3427006	1.364893436	-3.780864	2.435850859	-0.89572787
F211	EX	0.75	1.451875091	-0.3427006	1.364893436	-3.780864	1.41218102	-0.63870245
F211	EX	1.5	1.451875091	-0.3427006	1.364893436	-3.780864	0.388511389	-0.38167709
F211	EX	2.25	1.451875091	-0.3427006	1.364893436	-3.780864	-0.63515836	-0.12465172
F211	EX	3	1.451875091	-0.3427006	1.364893436	-3.780864	-1.65882802	0.132373676
F211	EY	0	-23.6335506	11.50726986	0.318247795	0.01542988	0.619968772	33.97755432
F211	EY	0.75	-23.6335506	11.50726986	0.318247795	0.01542988	0.381282955	25.34710121
F211	EY	1.5	-23.6335506	11.50726986	0.318247795	0.01542988	0.142597198	16.71665192
F211	EY	2.25	-23.6335506	11.50726986	0.318247795	0.01542988	-0.09608857	8.086202621
F211	EY	3	-23.6335506	11.50726986	0.318247795	0.01542988	-0.33477435	-0.54424739
F211	COMB1	0	9.223283768	-137.31871	-0.07886443	0.499481529	-0.16893119	-179.47757
F211	COMB1	0.75	9.223283768	-127.015968	-0.07886443	0.499481529	-0.10978288	-79.5097504
F211	COMB1	1.5	9.223283768	-103.235733	-0.07886443	0.499481529	-0.05063458	7.676956177
F211	COMB1	2.25	9.223283768	-79.4554901	-0.07886443	0.499481529	0.008513729	75.34379578
F211	COMB1	3	9.223283768	-69.1527481	-0.07886443	0.499481529	0.06766203	130.2295227
F211	COMB2	0	0.042551812	-90.2031403	1.423332572	-3.71038747	2.537722111	-111.826324
F211	COMB2	0.75	0.042551812	-82.7140198	1.423332572	-3.71038747	1.470222831	-46.4360886
F211	COMB2	1.5	0.042551812	-66.4836502	1.423332572	-3.71038747	0.402723849	10.05934715
F211	COMB2	2.25	0.042551812	-50.2532806	1.423332572	-3.71038747	-0.66477519	53.28935623
F211	COMB2	3	0.042551812	-42.764164	1.423332572	-3.71038747	-1.73227429	87.6245575
F211	COMB3	0	-18.3734589	-81.4985504	0.674521446	-0.97682452	1.239586473	-86.207901
F211	COMB3	0.75	-18.3734589	-74.0094299	0.674521446	-0.97682452	0.733695507	-27.3461056
F211	COMB3	1.5	-18.3734589	-57.7790642	0.674521446	-0.97682452	0.227804586	22.62089348
F211	COMB3	2.25	-18.3734589	-41.5486908	0.674521446	-0.97682452	-0.27808633	59.32246399
F211	COMB3	3	-18.3734589	-34.0595741	0.674521446	-0.97682452	-0.78397721	87.12922668
F212	D	0	8.044588089	-83.8616562	-0.20921479	1.598395824	-0.34368941	-108.895409
F212	D	0.75	8.044588089	-77.1510315	-0.20921479	1.598395824	-0.18677835	-48.0480919
F212	D	1.5	8.044588089	-62.9591637	-0.20921479	1.598395824	-0.02986731	4.960791111
F212	D	2.25	8.044588089	-48.7672958	-0.20921479	1.598395824	0.127043724	46.390625
F212	D	3	8.044588089	-42.056675	-0.20921479	1.598395824	0.283954769	79.98202515
F212	L	0	3.860230684	-35.2312279	7.88128E-05	0.623937666	0.00029951	-44.2157707

F212	L	0.75	3.860230684	-32.5593529	7.88128E-05	0.623937666	0.000240401	-18.4603252
F212	L	1.5	3.860230684	-24.5437336	7.88128E-05	0.623937666	0.000181291	3.287309647
F212	L	2.25	3.860230684	-16.5281105	7.88128E-05	0.623937666	0.000122181	18.35526276
F212	L	3	3.860230684	-13.8562355	7.88128E-05	0.623937666	6.30718E-05	29.41540337
F212	EX	0	0.214050546	0.249210641	1.654456496	-4.16104794	2.932718277	0.070102073
F212	EX	0.75	0.214050546	0.249210641	1.654456496	-4.16104794	1.691876292	-0.11680585
F212	EX	1.5	0.214050546	0.249210641	1.654456496	-4.16104794	0.451034218	-0.30371377
F212	EX	2.25	0.214050546	0.249210641	1.654456496	-4.16104794	-0.78980774	-0.49062172
F212	EX	3	0.214050546	0.249210641	1.654456496	-4.16104794	-2.03064966	-0.67752963
F212	EY	0	-20.6510448	13.22257137	0.479097456	0.014658806	0.913050234	39.22997284
F212	EY	0.75	-20.6510448	13.22257137	0.479097456	0.014658806	0.55372721	29.3130455
F212	EY	1.5	-20.6510448	13.22257137	0.479097456	0.014658806	0.194404244	19.39612007
F212	EY	2.25	-20.6510448	13.22257137	0.479097456	0.014658806	-0.16491874	9.479193687
F212	EY	3	-20.6510448	13.22257137	0.479097456	0.014658806	-0.52424175	-0.43773192
F212	COMB1	0	15.82987499	-157.003952	-0.25093165	2.91637516	-0.41194808	-201.419724
F212	COMB1	0.75	15.82987499	-144.676208	-0.25093165	2.91637516	-0.22374938	-87.1942291
F212	COMB1	1.5	15.82987499	-114.820969	-0.25093165	2.91637516	-0.03555071	11.21264458
F212	COMB1	2.25	15.82987499	-84.9657364	-0.25093165	2.91637516	0.152647957	85.03717041
F212	COMB1	3	15.82987499	-72.6379852	-0.25093165	2.91637516	0.340846628	143.0430756
F212	COMB2	0	3.379253864	-94.7295303	1.643627524	-2.42721105	2.962194681	-115.83815
F212	COMB2	0.75	3.379253864	-86.8417358	1.643627524	-2.42721105	1.729474425	-47.1527824
F212	COMB2	1.5	3.379253864	-69.4153519	1.643627524	-2.42721105	0.496754199	12.03976727
F212	COMB2	2.25	3.379253864	-51.9889755	1.643627524	-2.42721105	-0.73596603	56.97021484
F212	COMB2	3	3.379253864	-44.101181	1.643627524	-2.42721105	-1.96868622	92.40785217
F212	COMB3	0	-11.9533796	-85.1903687	0.804555416	0.579517663	1.521729469	-87.0545959
F212	COMB3	0.75	-11.9533796	-77.3025742	0.804555416	0.579517663	0.918313086	-25.5235958
F212	COMB3	1.5	-11.9533796	-59.8761978	0.804555416	0.579517663	0.314896673	26.51458931
F212	COMB3	2.25	-11.9533796	-42.4498138	0.804555416	0.579517663	-0.28851971	64.2906723
F212	COMB3	3	-11.9533796	-34.5620193	0.804555416	0.579517663	-0.89193612	92.57393646
F213	D	0	6.085042477	-90.2112274	-0.33292052	-12.2001667	-0.53326118	-103.116356
F213	D	0.75	6.085042477	-76.0006104	-0.33292052	-12.2001667	-0.28357083	-40.319355
F213	D	1.5	6.085042477	-54.3087425	-0.33292052	-12.2001667	-0.03388049	9.014216423
F213	D	2.25	6.085042477	-32.6168785	-0.33292052	-12.2001667	0.215809837	41.14373398
F213	D	3	6.085042477	-18.4062576	-0.33292052	-12.2001667	0.465500176	59.8098259
F213	L	0	2.868775368	-27.5297661	-0.01832131	-4.26355696	-0.02025225	-32.5320168
F213	L	0.75	2.868775368	-24.8578911	-0.01832131	-4.26355696	-0.00651127	-12.5526667
F213	L	1.5	2.868775368	-16.842268	-0.01832131	-4.26355696	0.007229709	3.41887331
F213	L	2.25	2.868775368	-8.8266468	-0.01832131	-4.26355696	0.020970687	12.7107296
F213	L	3	2.868775368	-6.15477276	-0.01832131	-4.26355696	0.034711666	17.99477577
F213	EX	0	1.003036261	-1.445225	1.285763264	-3.26832271	2.299162388	-2.54816437
F213	EX	0.75	1.003036261	-1.445225	1.285763264	-3.26832271	1.334840298	-1.46424615
F213	EX	1.5	1.003036261	-1.445225	1.285763264	-3.26832271	0.370518148	-0.3803277
F213	EX	2.25	1.003036261	-1.445225	1.285763264	-3.26832271	-0.593804	0.703590751
F213	EX	3	1.003036261	-1.445225	1.285763264	-3.26832271	-1.55812609	1.787509084
F213	EY	0	-20.770895	13.84660721	0.172953233	0.008247775	0.324160755	41.0976181
F213	EY	0.75	-20.770895	13.84660721	0.172953233	0.008247775	0.194445878	30.71266747
F213	EY	1.5	-20.770895	13.84660721	0.172953233	0.008247775	0.064731002	20.32771492
F213	EY	2.25	-20.770895	13.84660721	0.172953233	0.008247775	-0.06498387	9.942763329
F213	EY	3	-20.770895	13.84660721	0.172953233	0.008247775	-0.19469874	-0.44218925
F213	COMB1	0	11.89209175	-152.301102	-0.42881873	-21.4618912	-0.67231697	-175.790848
F213	COMB1	0.75	11.89209175	-130.973358	-0.42881873	-21.4618912	-0.35070303	-68.4674911
F213	COMB1	1.5	11.89209175	-92.1181259	-0.42881873	-21.4618912	-0.02908906	16.28725624
F213	COMB1	2.25	11.89209175	-53.2628899	-0.42881873	-21.4618912	0.292524904	69.70964813
F213	COMB1	3	11.89209175	-31.9351444	-0.42881873	-21.4618912	0.614138842	100.5634308
F213	COMB2	0	1.78826952	-100.527794	1.029907465	-17.5333118	1.915440083	-108.211357
F213	COMB2	0.75	1.78826952	-84.7649994	1.029907465	-17.5333118	1.143009782	-38.1304169
F213	COMB2	1.5	1.78826952	-59.463623	1.029907465	-17.5333118	0.370579392	16.55146408
F213	COMB2	2.25	1.78826952	-34.1622429	1.029907465	-17.5333118	-0.40185094	51.06498718
F213	COMB2	3	1.78826952	-18.3994503	1.029907465	-17.5333118	-1.17428124	70.17945099
F213	COMB3	0	-14.2005253	-89.3099747	0.231278554	-15.174057	0.498301268	-76.1699295
F213	COMB3	0.75	-14.2005253	-73.5471802	0.231278554	-15.174057	0.324842453	-14.5023489
F213	COMB3	1.5	-14.2005253	-48.2458038	0.231278554	-15.174057	0.151383609	31.7661705
F213	COMB3	2.25	-14.2005253	-22.9444237	0.231278554	-15.174057	-0.02207523	57.86633301
F213	COMB3	3	-14.2005253	-7.18163157	0.231278554	-15.174057	-0.19553407	68.56743622
F214	D	0	0.653848767	-35.7951698	-0.00735007	-0.00148572	-0.01848698	-24.785984
F214	D	1.25	0.653848767	-23.1545448	-0.00735007	-0.00148572	-0.00929939	14.22230148
F214	D	2.5	0.653848767	3.617324352	-0.00735007	-0.00148572	-0.00011181	26.6581974
F214	D	3.75	0.653848767	30.38919258	-0.00735007	-0.00148572	0.009075776	5.178990841
F214	D	5	0.653848767	43.02981567	-0.00735007	-0.00148572	0.01826336	-42.8726044
F214	L	0	0.042110149	-11.9774542	0.000640061	-0.00090721	0.001609747	-8.5994873
F214	L	1.25	0.042110149	-8.07120419	0.000640061	-0.00090721	0.000809671	4.744727135
F214	L	2.5	0.042110149	1.147546172	0.000640061	-0.00090721	9.59433E-06	9.15664959
F214	L	3.75	0.042110149	10.36629677	0.000640061	-0.00090721	-0.00079048	1.875861526
F214	L	5	0.042110149	14.27254581	0.000640061	-0.00090721	-0.00159056	-14.3372173
F214	EX	0	-2.31749558	2.426204205	-0.52878058	-0.00095676	-1.3688513	7.055675983
F214	EX	1.25	-2.31749558	2.426204205	-0.52878058	-0.00095676	-0.70787555	4.022920609
F214	EX	2.5	-2.31749558	2.426204205	-0.52878058	-0.00095676	-0.04689983	0.99016583
F214	EX	3.75	-2.31749558	2.426204205	-0.52878058	-0.00095676	0.614075899	-2.04258943
F214	EX	5	-2.31749558	2.426204205	-0.52878058	-0.00095676	1.275051713	-5.07534456
F214	EY	0	-0.00651746	0.002161539	0.149755731	-0.01283539	0.37715432	0.007891237
F214	EY	1.25	-0.00651746	0.002161539	0.149755731	-0.01283539	0.189959645	0.005189312
F214	EY	2.5	-0.00651746	0.002161539	0.149755731	-0.01283539	0.002764991	0.002487388
F214	EY	3.75	-0.00651746	0.002161539	0.149755731	-0.01283539	-0.18442966	-0.00021454
F214	EY	5	-0.00651746	0.002161539	0.149755731	-0.01283539	-0.37162432	-0.00291646

F214	COMB1	0	0.851994812	-62.1181297	-0.00779598	-0.00323439	-0.01960878	-43.5023613
F214	COMB1	1.25	0.851994812	-40.6993828	-0.00779598	-0.00323439	-0.0098638	24.6583252
F214	COMB1	2.5	0.851994812	6.176863194	-0.00779598	-0.00323439	-0.00011882	46.64047623
F214	COMB1	3.75	0.851994812	53.05310822	-0.00779598	-0.00323439	0.00962616	9.21616745
F214	COMB1	5	0.851994812	74.47185516	-0.00779598	-0.00323439	0.019371139	-74.386673
F214	COMB2	0	-1.70085514	-38.8460236	-0.50763077	-0.00687917	-1.31686175	-21.4290104
F214	COMB2	1.25	-1.70085514	-24.3428993	-0.50763077	-0.00687917	-0.68232322	20.59336281
F214	COMB2	2.5	-1.70085514	6.671469688	-0.50763077	-0.00687917	-0.04778473	31.90105629
F214	COMB2	3.75	-1.70085514	37.68583679	-0.50763077	-0.00687917	0.586753726	3.914689302
F214	COMB2	5	-1.70085514	52.18896103	-0.50763077	-0.00687917	1.221292257	-54.7863579
F214	COMB3	0	-0.03704854	-40.591301	-0.01683831	-0.01562432	-0.05408038	-26.5032978
F214	COMB3	1.25	-0.03704854	-26.0881786	-0.01683831	-0.01562432	-0.03303248	17.70067406
F214	COMB3	2.5	-0.03704854	4.92619133	-0.01683831	-0.01562432	-0.01198458	31.18996429
F214	COMB3	3.75	-0.03704854	35.94055939	-0.01683831	-0.01562432	0.009063315	5.385196209
F214	COMB3	5	-0.03704854	50.44368362	-0.01683831	-0.01562432	0.030111236	-51.1342545
F215	D	0	1.01057446	-39.5322533	-0.02101026	0.002674988	-0.05250198	-39.9231148
F215	D	1.25	1.01057446	-26.8916302	-0.02101026	0.002674988	-0.02623915	3.756528616
F215	D	2.5	1.01057446	-0.1197611	-0.02101026	0.002674988	2.36762E-05	20.86377907
F215	D	3.75	1.01057446	26.65210915	-0.02101026	0.002674988	0.026286501	4.055931568
F215	D	5	1.01057446	39.29273224	-0.02101026	0.002674988	0.052549325	-39.3243103
F215	L	0	0.031703811	-13.107832	-0.00614237	0.000635597	-0.0153641	-13.3722048
F215	L	1.25	0.031703811	-9.20158195	-0.00614237	0.000635597	-0.00768614	1.384981751
F215	L	2.5	0.031703811	0.017168501	-0.00614237	0.000635597	-8.1694E-06	7.209875584
F215	L	3.75	0.031703811	9.235918999	-0.00614237	0.000635597	0.007669796	1.342060447
F215	L	5	0.031703811	13.142169	-0.00614237	0.000635597	0.015347763	-13.4580469
F215	EX	0	-3.11269975	1.481814384	-0.4634451	0.000640676	-1.17373681	3.633248091
F215	EX	1.25	-3.11269975	1.481814384	-0.4634451	0.000640676	-0.59443039	1.780979872
F215	EX	2.5	-3.11269975	1.481814384	-0.4634451	0.000640676	-0.01512401	-0.07128805
F215	EX	3.75	-3.11269975	1.481814384	-0.4634451	0.000640676	0.564182401	-1.92355609
F215	EX	5	-3.11269975	1.481814384	-0.4634451	0.000640676	1.143488765	-3.77582383
F215	EY	0	-0.0172779	0.007328072	0.265850455	-0.03367504	0.661846578	0.017664768
F215	EY	1.25	-0.0172779	0.007328072	0.265850455	-0.03367504	0.329533517	0.008504678
F215	EY	2.5	-0.0172779	0.007328072	0.265850455	-0.03367504	-0.00277952	-0.00065541
F215	EY	3.75	-0.0172779	0.007328072	0.265850455	-0.03367504	-0.33509257	-0.0098155
F215	EY	5	-0.0172779	0.007328072	0.265850455	-0.03367504	-0.66740561	-0.01897559
F215	COMB1	0	1.263415456	-68.411232	-0.03504011	0.004226941	-0.08758493	-69.3032608
F215	COMB1	1.25	1.263415456	-46.9924889	-0.03504011	0.004226941	-0.04378479	6.723805428
F215	COMB1	2.5	1.263415456	-0.11624372	-0.03504011	0.004226941	1.53404E-05	36.57233429
F215	COMB1	3.75	1.263415456	46.76000214	-0.03504011	0.004226941	0.043815475	7.01441431
F215	COMB1	5	1.263415456	68.17874908	-0.03504011	0.004226941	0.087615609	-68.7220459
F215	COMB2	0	-2.15599704	-44.1018448	-0.41991842	-0.00693559	-1.06630266	-42.3655396
F215	COMB2	1.25	-2.15599704	-29.5987244	-0.41991842	-0.00693559	-0.5414046	6.226617336
F215	COMB2	2.5	-2.15599704	1.415645123	-0.41991842	-0.00693559	-0.01650661	24.10408974
F215	COMB2	3.75	-2.15599704	32.43001556	-0.41991842	-0.00693559	0.50839144	2.68750453
F215	COMB2	5	-2.15599704	46.9331398	-0.41991842	-0.00693559	1.033289433	-49.4437637
F215	COMB3	0	0.072447643	-45.1633682	0.109162137	-0.03214803	0.26524505	-44.9684944
F215	COMB3	1.25	0.072447643	-30.660244	0.109162137	-0.03214803	0.12879239	4.950562954
F215	COMB3	2.5	0.072447643	0.354124904	0.109162137	-0.03214803	-0.00766027	24.15493393
F215	COMB3	3.75	0.072447643	31.36849594	0.109162137	-0.03214803	-0.14411293	4.065250397
F215	COMB3	5	0.072447643	45.87161636	0.109162137	-0.03214803	-0.28056559	-46.7391205
F216	D	0	1.147616029	-39.4121208	-0.00076358	-2.5371E-06	-0.00166503	-38.9706078
F216	D	1.25	1.147616029	-26.7714977	-0.00076358	-2.5371E-06	-0.00071055	4.558868885
F216	D	2.5	1.147616029	0.000371938	-0.00076358	-2.5371E-06	0.000243931	21.51595306
F216	D	3.75	1.147616029	26.77224159	-0.00076358	-2.5371E-06	0.001198411	4.557938576
F216	D	5	1.147616029	39.41286469	-0.00076358	-2.5371E-06	0.002152891	-38.9724655
F216	L	0	-0.01746161	-13.0846901	-0.00070181	-1.2279E-05	-0.00169129	-13.1419744
F216	L	1.25	-0.01746161	-9.17843914	-0.00070181	-1.2279E-05	-0.00081403	1.58628273
F216	L	2.5	-0.01746161	0.040311083	-0.00070181	-1.2279E-05	6.32388E-05	7.382248878
F216	L	3.75	-0.01746161	9.25906086	-0.00070181	-1.2279E-05	0.000940504	1.485504985
F216	L	5	-0.01746161	13.16531181	-0.00070181	-1.2279E-05	0.001817769	-13.3435307
F216	EX	0	-2.97224879	1.656813025	-0.30354136	-0.01012689	-0.77023238	4.15316391
F216	EX	1.25	-2.97224879	1.656813025	-0.30354136	-0.01012689	-0.39080566	2.08214736
F216	EX	2.5	-2.97224879	1.656813025	-0.30354136	-0.01012689	-0.01137891	0.011130881
F216	EX	3.75	-2.97224879	1.656813025	-0.30354136	-0.01012689	0.368047833	-2.0598855
F216	EX	5	-2.97224879	1.656813025	-0.30354136	-0.01012689	0.747474551	-4.13090229
F216	EY	0	-0.02135006	4.13409E-07	-1.5256E-05	-1.0154E-06	-0.00385521	0.001215432
F216	EY	1.25	-0.02135006	4.13409E-07	-1.5256E-05	-1.0154E-06	-0.00383614	0.001214915
F216	EY	2.5	-0.02135006	4.13409E-07	-1.5256E-05	-1.0154E-06	-0.00381707	0.001214398
F216	EY	3.75	-0.02135006	4.13409E-07	-1.5256E-05	-1.0154E-06	-0.003798	0.001213882
F216	EY	5	-0.02135006	4.13409E-07	-1.5256E-05	-1.0154E-06	-0.00377893	0.001213365
F216	COMB1	0	1.349200606	-68.2300491	-0.0020392	-2.2692E-05	-0.0047041	-67.791893
F216	COMB1	1.25	1.349200606	-46.8113022	-0.0020392	-2.2692E-05	-0.0021551	8.008694649
F216	COMB1	2.5	1.349200606	0.064944059	-0.0020392	-2.2692E-05	0.000393899	37.63074112
F216	COMB1	3.75	1.349200606	46.941185	-0.0020392	-2.2692E-05	0.0029429	7.846334457
F216	COMB1	5	1.349200606	68.35993958	-0.0020392	-2.2692E-05	0.0054919	-68.1166077
F216	COMB2	0	-1.8835063	-43.7896004	-0.31519297	-0.01048818	-0.80068594	-40.7599525
F216	COMB2	1.25	-1.8835063	-29.2864799	-0.31519297	-0.01048818	-0.40669474	7.441896439
F216	COMB2	2.5	-1.8835063	1.727890134	-0.31519297	-0.01048818	-0.0127035	24.92906189
F216	COMB2	3.75	-1.8835063	32.74225998	-0.31519297	-0.01048818	0.381287724	3.122170448
F216	COMB2	5	-1.8835063	47.24538422	-0.31519297	-0.01048818	0.775278986	-49.3994026
F216	COMB3	0	0.240820512	-44.9825058	-0.09665439	-0.00319757	-0.24895221	-43.7493362
F216	COMB3	1.25	0.240820512	-30.4793854	-0.09665439	-0.00319757	-0.12813422	5.943643093
F216	COMB3	2.5	0.240820512	0.534985065	-0.09665439	-0.00319757	-0.00731623	24.92194176
F216	COMB3	3.75	0.240820512	31.54935265	-0.09665439	-0.00319757	0.113501757	4.606180191

F219	EX	2.25	-1.35317302	-0.95798182	2.272460699	3.760874033	-2.90429807	0.339678079
F219	EX	3	-1.35317302	-0.95798182	2.272460699	3.760874033	-4.60864305	1.058164358
F219	EY	0	-20.6211491	13.8444376	-0.16643842	-0.00035549	-0.18245229	-0.42935362
F219	EY	0.75	-20.6211491	13.8444376	-0.16643842	-0.00035549	-0.05762351	-10.8126793
F219	EY	1.5	-20.6211491	13.8444376	-0.16643842	-0.00035549	0.067205273	-21.1960049
F219	EY	2.25	-20.6211491	13.8444376	-0.16643842	-0.00035549	0.192034051	-31.5793285
F219	EY	3	-20.6211491	13.8444376	-0.16643842	-0.00035549	0.316862851	-41.9626541
F219	COMB1	0	7.904921055	30.34722137	-0.41883719	-21.722496	-0.59547454	82.31715393
F219	COMB1	0.75	7.904921055	46.28059387	-0.41883719	-21.722496	-0.28134674	54.0029068
F219	COMB1	1.5	7.904921055	68.95271301	-0.41883719	-21.722496	0.032781076	11.21160126
F219	COMB1	2.25	7.904921055	91.62482452	-0.41883719	-21.722496	0.346908897	-49.4261284
F219	COMB1	3	7.904921055	107.558197	-0.41883719	-21.722496	0.66103667	-124.540909
F219	COMB2	0	-2.49620485	23.50113106	1.957122326	-10.4578753	1.74665606	57.76678848
F219	COMB2	0.75	-2.49620485	36.67993927	1.957122326	-10.4578753	0.278814763	35.47205734
F219	COMB2	1.5	-2.49620485	54.22937393	1.957122326	-10.4578753	-1.18902659	1.65423882
F219	COMB2	2.25	-2.49620485	71.77880096	1.957122326	-10.4578753	-2.65686798	-45.8719749
F219	COMB2	3	-2.49620485	84.95761108	1.957122326	-10.4578753	-4.12470913	-104.92128
F219	COMB3	0	-16.6784649	34.366539	0.198618427	-13.165966	0.02226302	58.75857544
F219	COMB3	0.75	-16.6784649	47.54534912	0.198618427	-13.165966	-0.12670074	28.31478882
F219	COMB3	1.5	-16.6784649	65.09477997	0.198618427	-13.165966	-0.27566451	-13.6520824
F219	COMB3	2.25	-16.6784649	82.64421082	0.198618427	-13.165966	-0.42462829	-69.3273468
F219	COMB3	3	-16.6784649	95.82302094	0.198618427	-13.165966	-0.57359207	-136.525711
F220	D	0	7.957989216	40.63554001	-0.14538975	1.473870993	-0.21442164	79.8085022
F220	D	0.75	7.957989216	47.34616089	-0.14538975	1.473870993	-0.10537936	47.28295135
F220	D	1.5	7.957989216	61.53802872	-0.14538975	1.473870993	0.003662921	6.918969154
F220	D	2.25	7.957989216	75.72989655	-0.14538975	1.473870993	0.112705201	-45.0240669
F220	D	3	7.957989216	82.44052124	-0.14538975	1.473870993	0.221747473	-104.805534
F220	L	0	2.91235733	13.54174805	0.012003842	0.48036918	0.013380043	25.16449547
F220	L	0.75	2.91235733	14.94799709	0.012003842	0.48036918	0.004377165	14.65662479
F220	L	1.5	2.91235733	19.16674614	0.012003842	0.48036918	-0.00462571	2.039381742
F220	L	2.25	2.91235733	23.38549423	0.012003842	0.48036918	-0.01362859	-14.0934849
F220	L	3	2.91235733	24.79174423	0.012003842	0.48036918	-0.02263147	-32.3357239
F220	EX	0	-0.28354335	0.687492907	1.75282371	4.506019115	1.6478163	0.689183116
F220	EX	0.75	-0.28354335	0.687492907	1.75282371	4.506019115	0.333198816	0.173563555
F220	EX	1.5	-0.28354335	0.687492907	1.75282371	4.506019115	-0.98141861	-0.34205598
F220	EX	2.25	-0.28354335	0.687492907	1.75282371	4.506019115	-2.29603624	-0.85767549
F220	EX	3	-0.28354335	0.687492907	1.75282371	4.506019115	-3.61065364	-1.37329507
F220	EY	0	-20.5349236	13.21739578	-0.4683533	0.005923623	-0.50921357	-0.41689116
F220	EY	0.75	-20.5349236	13.21739578	-0.4683533	0.005923623	-0.15794869	-10.3299351
F220	EY	1.5	-20.5349236	13.21739578	-0.4683533	0.005923623	0.193316191	-20.242979
F220	EY	2.25	-20.5349236	13.21739578	-0.4683533	0.005923623	0.544581056	-30.1560211
F220	EY	3	-20.5349236	13.21739578	-0.4683533	0.005923623	0.89584595	-40.0690651
F220	COMB1	0	14.20935917	70.42944336	-0.15526156	2.537235737	-0.2358979	136.0333862
F220	COMB1	0.75	14.20935917	80.73219299	-0.15526156	2.537235737	-0.11945177	80.19013977
F220	COMB1	1.5	14.20935917	104.5124283	-0.15526156	2.537235737	-0.00300564	11.56577396
F220	COMB1	2.25	14.20935917	128.2926788	-0.15526156	2.537235737	0.113440491	-76.5784607
F220	COMB1	3	14.20935917	138.5954132	-0.15526156	2.537235737	0.229886621	-177.503799
F220	COMB2	0	2.511312962	51.80800247	1.517763257	6.364476681	1.324159622	92.307724
F220	COMB2	0.75	2.511312962	59.29712296	1.517763257	6.364476681	0.185837418	51.18964386
F220	COMB2	1.5	2.511312962	75.52748871	1.517763257	6.364476681	-0.95248473	1.176756501
F220	COMB2	2.25	2.511312962	91.75785828	1.517763257	6.364476681	-2.09080696	-62.1015625
F220	COMB2	3	2.511312962	99.24698639	1.517763257	6.364476681	-3.22912908	-134.274673
F220	COMB3	0	-12.3777046	61.02779388	-0.08850953	3.124496698	-0.23654011	91.50509644
F220	COMB3	0.75	-12.3777046	68.51691437	-0.08850953	3.124496698	-0.17015801	43.4721756
F220	COMB3	1.5	-12.3777046	84.74728394	-0.08850953	3.124496698	-0.1037759	-13.4555531
F220	COMB3	2.25	-12.3777046	100.9776535	-0.08850953	3.124496698	-0.03739381	-83.6487122
F220	COMB3	3	-12.3777046	108.466774	-0.08850953	3.124496698	0.028988313	-162.736664
F221	D	0	5.140823841	38.83257675	-0.04292091	0.184567258	-0.04204806	76.26786041
F221	D	0.75	5.140823841	45.54320145	-0.04292091	0.184567258	-0.00985739	45.09453583
F221	D	1.5	5.140823841	59.73506546	-0.04292091	0.184567258	0.022333287	6.082776546
F221	D	2.25	5.140823841	73.92693329	-0.04292091	0.184567258	0.05452396	-44.5080376
F221	D	3	5.140823841	80.63755798	-0.04292091	0.184567258	0.086714633	-102.937279
F221	L	0	1.832785606	12.98966217	0.032978497	0.159632981	0.043457087	24.09002304
F221	L	0.75	1.832785606	14.39591122	0.032978497	0.159632981	0.018723221	13.99621773
F221	L	1.5	1.832785606	18.61465836	0.032978497	0.159632981	-0.00601065	1.793037891
F221	L	2.25	1.832785606	22.83340836	0.032978497	0.159632981	-0.03074451	-13.9257641
F221	L	3	1.832785606	24.23965836	0.032978497	0.159632981	-0.05547838	-31.7539387
F221	EX	0	-1.33307374	0.154501274	0.997450054	4.134235859	0.654709876	-0.10553599
F221	EX	0.75	-1.33307374	0.154501274	0.997450054	4.134235859	-0.0933774	-0.22141191
F221	EX	1.5	-1.33307374	0.154501274	0.997450054	4.134235859	-0.8414647	-0.33728781
F221	EX	2.25	-1.33307374	0.154501274	0.997450054	4.134235859	-1.58955193	-0.45316377
F221	EX	3	-1.33307374	0.154501274	0.997450054	4.134235859	-2.33763933	-0.5690397
F221	EY	0	-23.8988438	11.51464939	-0.31415018	0.004761763	-0.32880393	-0.57791346
F221	EY	0.75	-23.8988438	11.51464939	-0.31415018	0.004761763	-0.09319136	-9.21389771
F221	EY	1.5	-23.8988438	11.51464939	-0.31415018	0.004761763	0.142421201	-17.8498821
F221	EY	2.25	-23.8988438	11.51464939	-0.31415018	0.004761763	0.378033757	-26.4858665
F221	EY	3	-23.8988438	11.51464939	-0.31415018	0.004761763	0.613646269	-35.1218529
F221	COMB1	0	9.101445198	67.3825531	0.0012605	0.476893485	0.019073667	130.0654755
F221	COMB1	0.75	9.101445198	77.6852951	0.0012605	0.476893485	0.018128287	76.50739288
F221	COMB1	1.5	9.101445198	101.465538	0.0012605	0.476893485	0.017182913	10.16819286
F221	COMB1	2.25	9.101445198	125.2457733	0.0012605	0.476893485	0.016237535	-75.6908646
F221	COMB1	3	9.101445198	135.5485229	0.0012605	0.476893485	0.01529216	-174.331039
F221	COMB2	0	-2.93267488	48.65297318	0.898724735	4.524514198	0.543590009	87.37834167
F221	COMB2	0.75	-2.93267488	56.14209366	0.898724735	4.524514198	-0.13045333	48.62653351

F224	L	0.75	2.870331049	8.475474358	0.024094637	4.253339291	0.020559236	12.97456264
F224	L	1.5	2.870331049	16.4910965	0.024094637	4.253339291	0.002488264	3.946086407
F224	L	2.25	2.870331049	24.50671959	0.024094637	4.253339291	-0.01558271	-11.7620745
F224	L	3	2.870331049	27.17859268	0.024094637	4.253339291	-0.03365368	-31.4780464
F224	EX	0	1.408876419	0.941742599	0.201359957	3.667145491	-0.53176278	1.786550403
F224	EX	0.75	1.408876419	0.941742599	0.201359957	3.667145491	-0.68278271	1.080243707
F224	EX	1.5	1.408876419	0.941742599	0.201359957	3.667145491	-0.83380258	0.373936981
F224	EX	2.25	1.408876419	0.941742599	0.201359957	3.667145491	-0.98482257	-0.33236971
F224	EX	3	1.408876419	0.941742599	0.201359957	3.667145491	-1.13584244	-1.03867638
F224	EY	0	-20.6211433	13.84444618	0.166435689	0.000356162	0.182448357	-0.42935389
F224	EY	0.75	-20.6211433	13.84444618	0.166435689	0.000356162	0.057621635	-10.812685
F224	EY	1.5	-20.6211433	13.84444618	0.166435689	0.000356162	-0.06720509	-21.1960144
F224	EY	2.25	-20.6211433	13.84444618	0.166435689	0.000356162	-0.19203182	-31.5793457
F224	EY	3	-20.6211433	13.84444618	0.166435689	0.000356162	-0.31685853	-41.962677
F224	COMB1	0	11.88519573	29.93921661	0.420455337	21.41674614	0.596841931	100.5647278
F224	COMB1	0.75	11.88519573	51.26696014	0.420455337	21.41674614	0.281500518	71.20788574
F224	COMB1	1.5	11.88519573	90.12219238	0.420455337	21.41674614	-0.03384089	19.28244209
F224	COMB1	2.25	11.88519573	128.9774323	0.420455337	21.41674614	-0.34918231	-63.9753571
F224	COMB1	3	11.88519573	150.3051758	0.420455337	21.41674614	-0.66452372	-169.801773
F224	COMB2	0	2.247764111	25.23561287	0.602590561	17.92038727	-0.0125803	70.18314362
F224	COMB2	0.75	2.247764111	40.99840546	0.602590561	17.92038727	-0.46452311	45.94155884
F224	COMB2	1.5	2.247764111	66.2997818	0.602590561	17.92038727	-0.91646582	6.300913334
F224	COMB2	2.25	2.247764111	91.60116577	0.602590561	17.92038727	-1.36840868	-53.5080833
F224	COMB2	3	2.247764111	107.3639526	0.602590561	17.92038727	-1.82035136	-128.716156
F224	COMB3	0	-13.9231672	34.73322678	0.579941571	15.28030491	0.504388452	68.58125305
F224	COMB3	0.75	-13.9231672	50.49601746	0.579941571	15.28030491	0.069432355	37.21646118
F224	COMB3	1.5	-13.9231672	75.7973938	0.579941571	15.28030491	-0.3655237	-9.54739189
F224	COMB3	2.25	-13.9231672	101.0987778	0.579941571	15.28030491	-0.80047977	-76.479599
F224	COMB3	3	-13.9231672	116.8615723	0.579941571	15.28030491	-1.23543584	-158.810867
F225	D	0	7.181499481	-40.5159111	-0.04488612	-0.02349149	-0.12597044	-30.0540218
F225	D	1.25	7.181499481	-26.0752869	-0.04488612	-0.02349149	-0.06986279	13.73018932
F225	D	2.5	7.181499481	2.496583939	-0.04488612	-0.02349149	-0.01375515	28.69200897
F225	D	3.75	7.181499481	31.06845284	-0.04488612	-0.02349149	0.042352494	7.488729954
F225	D	5	7.181499481	45.50907516	-0.04488612	-0.02349149	0.098460138	-42.5369415
F225	L	0	1.638658047	-12.0855999	0.003350761	-0.00505621	0.007520767	-8.6836853
F225	L	1.25	1.638658047	-8.1793499	0.003350761	-0.00505621	0.003332315	4.79571104
F225	L	2.5	1.638658047	1.039400697	0.003350761	-0.00505621	-0.00085614	9.342814445
F225	L	3.75	1.638658047	10.25815105	0.003350761	-0.00505621	-0.00504459	2.19720912
F225	L	5	1.638658047	14.16440105	0.003350761	-0.00505621	-0.00923304	-13.8806887
F225	EX	0	-57.6464462	20.44252396	-0.09706444	0.001912957	-0.25694498	54.30455017
F225	EX	1.25	-57.6464462	20.44252396	-0.09706444	0.001912957	-0.13561444	28.75139427
F225	EX	2.5	-57.6464462	20.44252396	-0.09706444	0.001912957	-0.01428389	3.198239565
F225	EX	3.75	-57.6464462	20.44252396	-0.09706444	0.001912957	0.107046664	-22.3549156
F225	EX	5	-57.6464462	20.44252396	-0.09706444	0.001912957	0.228377208	-47.9080696
F225	EY	0	-0.04688297	0.017980168	0.234932646	0.086325347	0.656407475	0.048182443
F225	EY	1.25	-0.04688297	0.017980168	0.234932646	0.086325347	0.362741649	0.025707234
F225	EY	2.5	-0.04688297	0.017980168	0.234932646	0.086325347	0.06907583	0.003232025
F225	EY	3.75	-0.04688297	0.017980168	0.234932646	0.086325347	-0.22459	-0.01924318
F225	EY	5	-0.04688297	0.017980168	0.234932646	0.086325347	-0.51825577	-0.04171839
F225	COMB1	0	11.23965168	-67.9560547	-0.04850212	-0.03627972	-0.13913129	-49.958725
F225	COMB1	1.25	11.23965168	-44.3773041	-0.04850212	-0.03627972	-0.07850365	24.14936447
F225	COMB1	2.5	11.23965168	4.658941746	-0.04850212	-0.03627972	-0.017876	49.37891388
F225	COMB1	3.75	11.23965168	53.69518661	-0.04850212	-0.03627972	0.042751655	12.50201035
F225	COMB1	5	11.23965168	77.27393341	-0.04850212	-0.03627972	0.103379309	-73.2534332
F225	COMB2	0	-51.6220894	-25.1849957	-0.07253283	0.002913622	-0.18906963	21.92830467
F225	COMB2	1.25	-51.6220894	-8.79187012	-0.07253283	0.002913622	-0.09840358	45.69313812
F225	COMB2	2.5	-51.6220894	24.11249924	-0.07253283	0.002913622	-0.00773753	36.38079453
F225	COMB2	3.75	-51.6220894	57.01686859	-0.07253283	0.002913622	0.082928523	-14.5881128
F225	COMB2	5	-51.6220894	73.4099884	-0.07253283	0.002913622	0.173594579	-98.634201
F225	COMB3	0	-10.1511059	-39.8903961	0.170029059	0.064985424	0.478390276	-17.1355591
F225	COMB3	1.25	-10.1511059	-23.4972725	0.170029059	0.064985424	0.265853941	25.0110302
F225	COMB3	2.5	-10.1511059	9.407097816	0.170029059	0.064985424	0.053317603	34.08043671
F225	COMB3	3.75	-10.1511059	42.31146622	0.170029059	0.064985424	-0.15921873	1.493283153
F225	COMB3	5	-10.1511059	58.70458984	0.170029059	0.064985424	-0.371755	-64.171051
F226	D	0	8.863898277	-41.7699623	-0.06449439	-0.10207415	-0.15200917	-40.1568756
F226	D	1.25	8.863898277	-27.32934	-0.06449439	-0.10207415	-0.07139118	5.19490242
F226	D	2.5	8.863898277	1.242530584	-0.06449439	-0.10207415	0.009226817	21.72428894
F226	D	3.75	8.863898277	29.81439972	-0.06449439	-0.10207415	0.089844815	2.088576078
F226	D	5	8.863898277	44.25502396	-0.06449439	-0.10207415	0.170462817	-46.3695297
F226	L	0	0.974411249	-12.3606253	-0.00778411	-0.03053875	-0.02016132	-11.7059898
F226	L	1.25	0.974411249	-8.45437431	-0.00778411	-0.03053875	-0.01043118	2.117187262
F226	L	2.5	0.974411249	0.764375806	-0.00778411	-0.03053875	-0.00070105	7.008071899
F226	L	3.75	0.974411249	9.983125687	-0.00778411	-0.03053875	0.009029083	0.206247628
F226	L	5	0.974411249	13.88937664	-0.00778411	-0.03053875	0.018759217	-15.5278692
F226	EX	0	-45.7814026	16.87831306	-0.13342257	0.00259345	-0.30405322	42.31217194
F226	EX	1.25	-45.7814026	16.87831306	-0.13342257	0.00259345	-0.137275	21.21427917
F226	EX	2.5	-45.7814026	16.87831306	-0.13342257	0.00259345	0.029503213	0.116388723
F226	EX	3.75	-45.7814026	16.87831306	-0.13342257	0.00259345	0.196281433	-20.9815006
F226	EX	5	-45.7814026	16.87831306	-0.13342257	0.00259345	0.36305964	-42.0793915
F226	EY	0	-0.10372046	0.016686043	0.497041643	0.212337568	1.210414767	0.040326685
F226	EY	1.25	-0.10372046	0.016686043	0.497041643	0.212337568	0.589112699	0.019469129
F226	EY	2.5	-0.10372046	0.016686043	0.497041643	0.212337568	-0.03218933	-0.00138843
F226	EY	3.75	-0.10372046	0.016686043	0.497041643	0.212337568	-0.65349144	-0.02224598
F226	EY	5	-0.10372046	0.016686043	0.497041643	0.212337568	-1.27479351	-0.04310353

F226	COMB1	0	12.19573593	-69.9009552	-0.08984784	-0.17135099	-0.21466912	-66.9178314
F226	COMB1	1.25	12.19573593	-46.3222046	-0.08984784	-0.17135099	-0.10235931	9.621382713
F226	COMB1	2.5	12.19573593	2.714037895	-0.08984784	-0.17135099	0.0099505	37.28206253
F226	COMB1	3.75	12.19573593	51.75028229	-0.08984784	-0.17135099	0.12226031	2.836287498
F226	COMB1	5	12.19573593	75.3290329	-0.08984784	-0.17135099	0.234570131	-80.4880219
F226	COMB2	0	-37.8023911	-30.27775	-0.05169534	-0.04722701	-0.09937487	-2.04630756
F226	COMB2	1.25	-37.8023911	-13.8846254	-0.05169534	-0.04722701	-0.03475567	28.08447266
F226	COMB2	2.5	-37.8023911	19.01974487	-0.05169534	-0.04722701	0.029863514	25.13807106
F226	COMB2	3.75	-37.8023911	51.92411423	-0.05169534	-0.04722701	0.094482698	-19.4648876
F226	COMB2	5	-37.8023911	68.31723785	-0.05169534	-0.04722701	0.159101889	-97.1450348
F226	COMB3	0	-4.91601515	-42.4178696	0.409694523	0.106973812	1.009198308	-32.4814301
F226	COMB3	1.25	-4.91601515	-26.0247459	0.409694523	0.106973812	0.497080177	12.82450199
F226	COMB3	2.5	-4.91601515	6.879624367	0.409694523	0.106973812	-0.01503796	25.05324936
F226	COMB3	3.75	-4.91601515	39.78399277	0.409694523	0.106973812	-0.52715611	-4.37455845
F226	COMB3	5	-4.91601515	56.17711639	0.409694523	0.106973812	-1.03927422	-66.8795547
F227	D	0	2.409900427	-42.9495773	-0.00112266	2.53253E-06	-0.02482025	-41.5233765
F227	D	1.25	2.409900427	-28.5089512	-0.00112266	2.53253E-06	-0.02341692	5.302917004
F227	D	2.5	2.409900427	0.062918358	-0.00112266	2.53253E-06	-0.0220136	23.30681801
F227	D	3.75	2.409900427	28.63478851	-0.00112266	2.53253E-06	-0.02061028	5.145620823
F227	D	5	2.409900427	43.07541275	-0.00112266	2.53253E-06	-0.01920696	-41.8379669
F227	L	0	-2.08660197	-13.0302782	-0.00163559	-2.7072E-05	0.00168508	-12.6166534
F227	L	1.25	-2.08660197	-9.12402725	-0.00163559	-2.7072E-05	0.003729569	2.04358983
F227	L	2.5	-2.08660197	0.094723046	-0.00163559	-2.7072E-05	0.005774058	7.771540165
F227	L	3.75	-2.08660197	9.313473701	-0.00163559	-2.7072E-05	0.007818547	1.806782007
F227	L	5	-2.08660197	13.2197237	-0.00163559	-2.7072E-05	0.009863037	-13.0902681
F227	EX	0	-31.4236794	17.09111786	0.158015355	0.058583088	0.393842727	42.84273529
F227	EX	1.25	-31.4236794	17.09111786	0.158015355	0.058583088	0.196323499	21.47883606
F227	EX	2.5	-31.4236794	17.09111786	0.158015355	0.058583088	-0.00119571	0.114938252
F227	EX	3.75	-31.4236794	17.09111786	0.158015355	0.058583088	-0.19871493	-21.2489586
F227	EX	5	-31.4236794	17.09111786	0.158015355	0.058583088	-0.39623412	-42.6128578
F227	EY	0	-0.15593874	5.19695E-08	-3.2732E-05	5.33877E-06	-0.14981218	0.015294772
F227	EY	1.25	-0.15593874	5.19695E-08	-3.2732E-05	5.33877E-06	-0.14977126	0.015294706
F227	EY	2.5	-0.15593874	5.19695E-08	-3.2732E-05	5.33877E-06	-0.14973034	0.01529464
F227	EY	3.75	-0.15593874	5.19695E-08	-3.2732E-05	5.33877E-06	-0.14968942	0.015294576
F227	EY	5	-0.15593874	5.19695E-08	-3.2732E-05	5.33877E-06	-0.14964852	0.01529451
F227	COMB1	0	-0.4466826	-72.3879395	-0.00396413	-4.0277E-05	-0.02708817	-70.0146942
F227	COMB1	1.25	-0.4466826	-48.809185	-0.00396413	-4.0277E-05	-0.022133	9.633243561
F227	COMB1	2.5	-0.4466826	0.227058902	-0.00396413	-4.0277E-05	-0.01717783	40.40264511
F227	COMB1	3.75	-0.4466826	49.26330185	-0.00396413	-4.0277E-05	-0.01222266	9.065595627
F227	COMB1	5	-0.4466826	72.84204865	-0.00396413	-4.0277E-05	-0.0072675	-71.1499863
F227	COMB2	0	-30.6995125	-31.5122852	0.161841586	0.060629308	0.334905922	-3.22674227
F227	COMB2	1.25	-30.6995125	-15.1191607	0.161841586	0.060629308	0.132603928	28.4472065
F227	COMB2	2.5	-30.6995125	17.78520966	0.161841586	0.060629308	-0.06969807	27.04397202
F227	COMB2	3.75	-30.6995125	50.68957901	0.161841586	0.060629308	-0.27200007	-16.0158176
F227	COMB2	5	-30.6995125	67.08270264	0.161841586	0.060629308	-0.47430205	-92.1527939
F227	COMB3	0	-8.18907833	-43.8178902	0.04804647	0.01845341	-0.05877279	-34.0622711
F227	COMB3	1.25	-8.18907833	-27.4247646	0.04804647	0.01845341	-0.11883088	12.99368572
F227	COMB3	2.5	-8.18907833	5.479604244	0.04804647	0.01845341	-0.17888896	26.97245789
F227	COMB3	3.75	-8.18907833	38.38397598	0.04804647	0.01845341	-0.23894705	-0.70532495
F227	COMB3	5	-8.18907833	54.77709579	0.04804647	0.01845341	-0.29900515	-61.4602928
F228	D	0	8.785470009	-44.0602226	0.060912207	0.10170456	0.161749586	-45.9768562
F228	D	1.25	8.785470009	-29.6195984	0.060912207	0.10170456	0.085609332	2.237745047
F228	D	2.5	8.785470009	-1.0477289	0.060912207	0.10170456	0.009469068	21.62995529
F228	D	3.75	8.785470009	27.52414131	0.060912207	0.10170456	-0.06667119	4.857067585
F228	D	5	8.785470009	41.96476364	0.060912207	0.10170456	-0.14281146	-40.7382126
F228	L	0	1.014935732	-14.0061502	0.006189427	0.027593138	0.014821045	-15.8640175
F228	L	1.25	1.014935732	-10.0999002	0.006189427	0.027593138	0.007084261	0.01606705
F228	L	2.5	1.014935732	-0.88114983	0.006189427	0.027593138	-0.00065252	6.963858604
F228	L	3.75	1.014935732	8.337600708	0.006189427	0.027593138	-0.00838931	2.218941689
F228	L	5	1.014935732	12.24384975	0.006189427	0.027593138	-0.01612609	-11.4582682
F228	EX	0	-17.6855698	16.61176109	-0.13344319	0.001862841	-0.36278892	41.41229248
F228	EX	1.25	-17.6855698	16.61176109	-0.13344319	0.001862841	-0.19598493	20.64758682
F228	EX	2.5	-17.6855698	16.61176109	-0.13344319	0.001862841	-0.02918092	-0.11711654
F228	EX	3.75	-17.6855698	16.61176109	-0.13344319	0.001862841	0.137623072	-20.8818188
F228	EX	5	-17.6855698	16.61176109	-0.13344319	0.001862841	0.304427087	-41.6465225
F228	EY	0	-0.1037204	-0.01668565	-0.49701744	-0.21234404	-1.27472401	-0.04310264
F228	EY	1.25	-0.1037204	-0.01668565	-0.49701744	-0.21234404	-0.65345222	-0.02224557
F228	EY	2.5	-0.1037204	-0.01668565	-0.49701744	-0.21234404	-0.03218037	-0.0013885
F228	EY	3.75	-0.1037204	-0.01668565	-0.49701744	-0.21234404	0.58909142	0.019468563
F228	EY	5	-0.1037204	-0.01668565	-0.49701744	-0.21234404	1.210363269	0.040325634
F228	COMB1	0	12.16646099	-75.2821121	0.082997732	0.166194499	0.217813179	-80.554657
F228	COMB1	1.25	12.16646099	-51.7033577	0.082997732	0.166194499	0.114066012	2.711001396
F228	COMB1	2.5	12.16646099	-2.66711426	0.082997732	0.166194499	0.010318845	37.09812164
F228	COMB1	3.75	12.16646099	46.36912918	0.082997732	0.166194499	-0.09342832	9.378787994
F228	COMB1	5	12.16646099	69.94787598	0.082997732	0.166194499	-0.19717549	-67.2190857
F228	COMB2	0	-8.79278755	-33.4872551	-0.22876671	0.050521299	-0.60251892	-10.4247217
F228	COMB2	1.25	-8.79278755	-17.0941296	-0.22876671	0.050521299	-0.31656051	23.71793747
F228	COMB2	2.5	-8.79278755	15.81023979	-0.22876671	0.050521299	-0.0306021	24.78341675
F228	COMB2	3.75	-8.79278755	48.71461105	-0.22876671	0.050521299	0.255356282	-15.807663
F228	COMB2	5	-8.79278755	65.10773468	-0.22876671	0.050521299	0.541314721	-89.4759293
F228	COMB3	0	3.864587307	-45.4599876	-0.49799544	-0.10689281	-1.27823305	-40.2732506
F228	COMB3	1.25	3.864587307	-29.0668621	-0.49799544	-0.10689281	-0.65573871	8.835325241
F228	COMB3	2.5	3.864587307	3.837507486	-0.49799544	-0.10689281	-0.0332444	24.8667202
F228	COMB3	3.75	3.864587307	36.74187851	-0.49799544	-0.10689281	0.589249909	-0.75844342

F231	EX	2.25	-0.20611304	-0.25791207	-1.44045508	-4.53053904	0.241373718	0.504850149
F231	EX	3	-0.20611304	-0.25791207	-1.44045508	-4.53053904	1.321715593	0.698284268
F231	EY	0	-16.6379738	13.47785568	-0.47605407	-0.00581016	-0.90639865	40.52039337
F231	EY	0.75	-16.6379738	13.47785568	-0.47605407	-0.00581016	-0.54935801	30.41199875
F231	EY	1.5	-16.6379738	13.47785568	-0.47605407	-0.00581016	-0.1923172	20.30360031
F231	EY	2.25	-16.6379738	13.47785568	-0.47605407	-0.00581016	0.164723545	10.19520378
F231	EY	3	-16.6379738	13.47785568	-0.47605407	-0.00581016	0.521764338	0.086806953
F231	COMB1	0	13.97014332	-139.312943	0.206950769	-2.17194438	0.306744188	-177.456833
F231	COMB1	0.75	13.97014332	-129.010193	0.206950769	-2.17194438	0.151531026	-75.9932556
F231	COMB1	1.5	13.97014332	-105.229927	0.206950769	-2.17194438	-0.00368213	12.68917751
F231	COMB1	2.25	13.97014332	-81.4496613	0.206950769	-2.17194438	-0.15889528	81.85171509
F231	COMB1	3	13.97014332	-71.146904	0.206950769	-2.17194438	-0.31410846	138.2331085
F231	COMB2	0	3.672823906	-90.9262695	-1.4785707	-6.12610054	-3.14749551	-107.604996
F231	COMB2	0.75	3.672823906	-83.4371414	-1.4785707	-6.12610054	-2.03856707	-41.6723518
F231	COMB2	1.5	3.672823906	-67.2067566	-1.4785707	-6.12610054	-0.92963833	15.36546993
F231	COMB2	2.25	3.672823906	-50.9763756	-1.4785707	-6.12610054	0.17929025	59.13784027
F231	COMB2	3	3.672823906	-43.4872475	-1.4785707	-6.12610054	1.288218856	94.01538849
F231	COMB3	0	-8.40768433	-80.834343	-0.79134279	-2.86838317	-1.65394914	-77.7681808
F231	COMB3	0.75	-8.40768433	-73.3452225	-0.79134279	-2.86838317	-1.06044185	-19.4044781
F231	COMB3	1.5	-8.40768433	-57.1148376	-0.79134279	-2.86838317	-0.46693441	30.06439781
F231	COMB3	2.25	-8.40768433	-40.8844528	-0.79134279	-2.86838317	0.126572967	66.26782227
F231	COMB3	3	-8.40768433	-33.3953247	-0.79134279	-2.86838317	0.720080376	93.57642365
F232	D	0	4.690925121	-81.8514099	-0.00398629	-0.08109532	-0.04191498	-104.325653
F232	D	0.75	4.690925121	-75.1407776	-0.00398629	-0.08109532	-0.03892526	-44.9859734
F232	D	1.5	4.690925121	-60.9488945	-0.00398629	-0.08109532	-0.03593554	6.515256405
F232	D	2.25	4.690925121	-46.7570152	-0.00398629	-0.08109532	-0.03294583	46.43741608
F232	D	3	4.690925121	-40.0463905	-0.00398629	-0.08109532	-0.02995611	78.52113342
F232	L	0	1.665662169	-24.5881882	-3.4868E-05	-0.1659243	0.002111942	-32.1589127
F232	L	0.75	1.665662169	-23.1819382	-3.4868E-05	-0.1659243	0.002138093	-14.0693254
F232	L	1.5	1.665662169	-18.9631863	-3.4868E-05	-0.1659243	0.002164244	1.910886049
F232	L	2.25	1.665662169	-14.7444344	-3.4868E-05	-0.1659243	0.002190395	14.37546921
F232	L	3	1.665662169	-13.3381834	-3.4868E-05	-0.1659243	0.002216547	24.73067284
F232	EX	0	-1.23639905	0.472252339	-0.95002753	-4.03525877	-2.22818351	1.287995219
F232	EX	0.75	-1.23639905	0.472252339	-0.95002753	-4.03525877	-1.51566255	0.933805704
F232	EX	1.5	-1.23639905	0.472252339	-0.95002753	-4.03525877	-0.80314147	0.579616249
F232	EX	2.25	-1.23639905	0.472252339	-0.95002753	-4.03525877	-0.09062044	0.225426853
F232	EX	3	-1.23639905	0.472252339	-0.95002753	-4.03525877	0.621900558	-0.12876259
F232	EY	0	-18.2571507	11.92249489	-0.31967166	-0.00613955	-0.62035942	35.85227966
F232	EY	0.75	-18.2571507	11.92249489	-0.31967166	-0.00613955	-0.38060555	26.91040421
F232	EY	1.5	-18.2571507	11.92249489	-0.31967166	-0.00613955	-0.14085166	17.96852684
F232	EY	2.25	-18.2571507	11.92249489	-0.31967166	-0.00613955	0.098902225	9.026650429
F232	EY	3	-18.2571507	11.92249489	-0.31967166	-0.00613955	0.338656098	0.08477395
F232	COMB1	0	8.294169426	-137.56279	-0.00483934	-0.36279327	-0.04691887	-176.64505
F232	COMB1	0.75	8.294169426	-127.260033	-0.00483934	-0.36279327	-0.04328937	-76.4940872
F232	COMB1	1.5	8.294169426	-103.479774	-0.00483934	-0.36279327	-0.03965986	10.87572575
F232	COMB1	2.25	8.294169426	-79.6995163	-0.00483934	-0.36279327	-0.03603036	78.7256546
F232	COMB1	3	8.294169426	-69.396759	-0.00483934	-0.36279327	-0.03240085	133.7944336
F232	COMB2	0	-1.58052063	-89.4448853	-1.0881716	-4.31584311	-2.54492879	-107.045448
F232	COMB2	0.75	-1.58052063	-81.9557571	-1.0881716	-4.31584311	-1.72879946	-42.2238464
F232	COMB2	1.5	-1.58052063	-65.7253799	-1.0881716	-4.31584311	-0.91267025	13.70293713
F232	COMB2	2.25	-1.58052063	-49.4949951	-1.0881716	-4.31584311	-0.09654108	56.36427307
F232	COMB2	3	-1.58052063	-42.0058708	-1.0881716	-4.31584311	0.719588041	90.13078308
F232	COMB3	0	-14.1093197	-81.0218735	-0.63911051	-1.41496921	-1.39660072	-81.621376
F232	COMB3	0.75	-14.1093197	-73.5327454	-0.63911051	-1.41496921	-0.91726756	-23.1170387
F232	COMB3	1.5	-14.1093197	-57.3023643	-0.63911051	-1.41496921	-0.4379344	26.49248123
F232	COMB3	2.25	-14.1093197	-41.0719833	-0.63911051	-1.41496921	0.04139876	62.83655167
F232	COMB3	3	-14.1093197	-33.5828552	-0.63911051	-1.41496921	0.520731866	90.28580475
F233	D	0	4.692367554	-81.8215256	0.006661394	0.032132488	0.046844952	-104.285522
F233	D	0.75	4.692367554	-75.1109009	0.006661394	0.032132488	0.041848905	-44.9682541
F233	D	1.5	4.692367554	-60.9190178	0.006661394	0.032132488	0.036852855	6.510570526
F233	D	2.25	4.692367554	-46.7271385	0.006661394	0.032132488	0.031856805	46.4103241
F233	D	3	4.692367554	-40.01651	0.006661394	0.032132488	0.026860757	78.47163391
F233	L	0	1.765054941	-24.6867104	0.00564931	0.231700614	0.007879047	-32.303791
F233	L	0.75	1.765054941	-23.2804585	0.00564931	0.231700614	0.003642061	-14.1403131
F233	L	1.5	1.765054941	-19.0617085	0.00564931	0.231700614	-0.00059492	1.913789749
F233	L	2.25	1.765054941	-14.8429556	0.00564931	0.231700614	-0.00483191	14.45226383
F233	L	3	1.765054941	-13.4367046	0.00564931	0.231700614	-0.00906889	24.88136101
F233	EX	0	1.24917388	-0.48411733	-0.54554564	-3.96207571	-1.56009567	-1.31019461
F233	EX	0.75	1.24917388	-0.48411733	-0.54554564	-3.96207571	-1.15093625	-0.94710636
F233	EX	1.5	1.24917388	-0.48411733	-0.54554564	-3.96207571	-0.74177688	-0.58401823
F233	EX	2.25	1.24917388	-0.48411733	-0.54554564	-3.96207571	-0.33261743	-0.22093002
F233	EX	3	1.24917388	-0.48411733	-0.54554564	-3.96207571	0.076541997	0.142158151
F233	EY	0	-18.2577133	11.92246437	0.319694757	0.006139225	0.620403171	35.85218048
F233	EY	0.75	-18.2577133	11.92246437	0.319694757	0.006139225	0.380631924	26.910326
F233	EY	1.5	-18.2577133	11.92246437	0.319694757	0.006139225	0.140860707	17.96847153
F233	EY	2.25	-18.2577133	11.92246437	0.319694757	0.006139225	-0.0989105	9.026618958
F233	EY	3	-18.2577133	11.92246437	0.319694757	0.006139225	-0.33868173	0.084765673
F233	COMB1	0	8.454929352	-137.68457	0.017032569	0.409279972	0.068820417	-176.82869
F233	COMB1	0.75	8.454929352	-127.381821	0.017032569	0.409279972	0.056045983	-76.5864105
F233	COMB1	1.5	8.454929352	-103.601555	0.017032569	0.409279972	0.043271545	10.87474823
F233	COMB1	2.25	8.454929352	-79.8212967	0.017032569	0.409279972	0.030497113	78.81600952
F233	COMB1	3	8.454929352	-69.5185394	0.017032569	0.409279972	0.017722679	133.9761353
F233	COMB2	0	1.02469337	-90.4344025	-0.45516187	-3.99208975	-1.36760294	-109.738106
F233	COMB2	0.75	1.02469337	-82.9452744	-0.45516187	-3.99208975	-1.02623141	-44.1743698

F233	COMB2	1.5	1.02469337	-66.7148895	-0.45516187	-3.99208975	-0.68485987	12.49455261
F233	COMB2	2.25	1.02469337	-50.4845123	-0.45516187	-3.99208975	-0.34348825	55.89802551
F233	COMB2	3	1.02469337	-42.9953842	-0.45516187	-3.99208975	-0.00211668	90.40667725
F233	COMB3	0	-13.2941313	-81.3228226	0.172606632	-1.13488281	0.211662278	-82.4434128
F233	COMB3	0.75	-13.2941313	-73.8337021	0.172606632	-1.13488281	0.082207203	-23.7133617
F233	COMB3	1.5	-13.2941313	-57.6033173	0.172606632	-1.13488281	-0.04724788	26.12187195
F233	COMB3	2.25	-13.2941313	-41.3729362	0.172606632	-1.13488281	-0.17670293	62.69165802
F233	COMB3	3	-13.2941313	-33.8838081	0.172606632	-1.13488281	-0.30615798	90.36662292
F234	D	0	7.913642883	-83.0452347	-0.14594884	1.362387538	-0.21859768	-105.071312
F234	D	0.75	7.913642883	-76.3346024	-0.14594884	1.362387538	-0.10913599	-44.8362694
F234	D	1.5	7.913642883	-62.1427231	-0.14594884	1.362387538	0.000325696	7.560335636
F234	D	2.25	7.913642883	-47.9508438	-0.14594884	1.362387538	0.10978739	48.37786484
F234	D	3	7.913642883	-41.2402115	-0.14594884	1.362387538	0.21924907	81.35694885
F234	L	0	3.784743547	-34.9422493	-0.01232804	0.571036994	-0.01491387	-42.8795586
F234	L	0.75	3.784743547	-32.2703705	-0.01232804	0.571036994	-0.00566783	-17.3408318
F234	L	1.5	3.784743547	-24.2547417	-0.01232804	0.571036994	0.003578201	4.190082073
F234	L	2.25	3.784743547	-16.2391129	-0.01232804	0.571036994	0.012824235	19.04129982
F234	L	3	3.784743547	-13.5672359	-0.01232804	0.571036994	0.022070268	29.88470459
F234	EX	0	0.141572475	0.245646611	-0.2100365	-4.44878769	-0.97161084	0.056905564
F234	EX	0.75	0.141572475	0.245646611	-0.2100365	-4.44878769	-0.81408334	-0.1273295
F234	EX	1.5	0.141572475	0.245646611	-0.2100365	-4.44878769	-0.65655589	-0.31156453
F234	EX	2.25	0.141572475	0.245646611	-0.2100365	-4.44878769	-0.49902841	-0.49579963
F234	EX	3	0.141572475	0.245646611	-0.2100365	-4.44878769	-0.34150097	-0.68003464
F234	EY	0	-16.6380005	13.47786522	0.476039022	0.005810534	0.906368375	40.52042389
F234	EY	0.75	-16.6380005	13.47786522	0.476039022	0.005810534	0.549338937	30.41201973
F234	EY	1.5	-16.6380005	13.47786522	0.476039022	0.005810534	0.192309424	20.30361557
F234	EY	2.25	-16.6380005	13.47786522	0.476039022	0.005810534	-0.16472004	10.1952095
F234	EY	3	-16.6380005	13.47786522	0.476039022	0.005810534	-0.5217495	0.08680544
F234	COMB1	0	15.55196095	-155.561874	-0.19486347	2.548524141	-0.28617939	-194.692871
F234	COMB1	0.75	15.55196095	-143.234116	-0.19486347	2.548524141	-0.14003173	-81.548851
F234	COMB1	1.5	15.55196095	-113.378853	-0.19486347	2.548524141	0.006115958	15.77653503
F234	COMB1	2.25	15.55196095	-83.5235901	-0.19486347	2.548524141	0.152263641	88.51951599
F234	COMB1	3	15.55196095	-71.1958313	-0.19486347	2.548524141	0.29841131	145.4438629
F234	COMB2	0	4.407076359	-93.7045288	-0.2245651	-2.9922812	-0.95433658	-111.009109
F234	COMB2	0.75	4.407076359	-85.8167267	-0.2245651	-2.9922812	-0.78591263	-43.0924454
F234	COMB2	1.5	4.407076359	-68.3903275	-0.2245651	-2.9922812	-0.6174888	15.33139801
F234	COMB2	2.25	4.407076359	-50.9639359	-0.2245651	-2.9922812	-0.44906485	59.49310684
F234	COMB2	3	4.407076359	-43.0761299	-0.2245651	-2.9922812	-0.28064093	94.1619873
F234	COMB3	0	-7.92378616	-83.9751663	0.276549876	0.215116546	0.411403984	-81.2675705
F234	COMB3	0.75	-7.92378616	-76.0873642	0.276549876	0.215116546	0.203991443	-20.6479321
F234	COMB3	1.5	-7.92378616	-58.660965	0.276549876	0.215116546	-0.0034211	30.47888184
F234	COMB3	2.25	-7.92378616	-41.2345695	0.276549876	0.215116546	-0.21083361	67.34355927
F234	COMB3	3	-7.92378616	-33.3467636	0.276549876	0.215116546	-0.41824612	94.71541595
F235	D	0	5.892790794	-89.4593658	-0.22140811	-12.2445068	-0.30265671	-99.8975906
F235	D	0.75	5.892790794	-75.2487259	-0.22140811	-12.2445068	-0.13660054	-37.6644402
F235	D	1.5	5.892790794	-53.5568466	-0.22140811	-12.2445068	0.029455638	11.10525608
F235	D	2.25	5.892790794	-31.8649597	-0.22140811	-12.2445068	0.195511818	42.67087173
F235	D	3	5.892790794	-17.6543293	-0.22140811	-12.2445068	0.361568004	60.77303696
F235	L	0	2.84345746	-27.2956085	-0.04304805	-4.21984482	-0.05754033	-31.4677734
F235	L	0.75	2.84345746	-24.6237316	-0.04304805	-4.21984482	-0.02525428	-11.6640253
F235	L	1.5	2.84345746	-16.6081009	-0.04304805	-4.21984482	0.007031769	4.131904602
F235	L	2.25	2.84345746	-8.59247208	-0.04304805	-4.21984482	0.039317824	13.24814034
F235	L	3	2.84345746	-5.92059565	-0.04304805	-4.21984482	0.071603872	18.35655975
F235	EX	0	1.402565002	-1.44591522	-0.01734248	-3.5793829	-0.7677846	-2.53049755
F235	EX	0.75	1.402565002	-1.44591522	-0.01734248	-3.5793829	-0.75477773	-1.44606066
F235	EX	1.5	1.402565002	-1.44591522	-0.01734248	-3.5793829	-0.74177086	-0.36162362
F235	EX	2.25	1.402565002	-1.44591522	-0.01734248	-3.5793829	-0.728764	0.722813368
F235	EX	3	1.402565002	-1.44591522	-0.01734248	-3.5793829	-0.71575713	1.807250381
F235	EY	0	-16.7299385	14.11178017	0.172496706	0.005763102	0.326573998	42.42712402
F235	EY	0.75	-16.7299385	14.11178017	0.172496706	0.005763102	0.197201401	31.84328461
F235	EY	1.5	-16.7299385	14.11178017	0.172496706	0.005763102	0.067828804	21.25944328
F235	EY	2.25	-16.7299385	14.11178017	0.172496706	0.005763102	-0.06154379	10.67560196
F235	EY	3	-16.7299385	14.11178017	0.172496706	0.005763102	-0.19091639	0.091761537
F235	COMB1	0	11.62088108	-151.024216	-0.33456662	-21.4451599	-0.45525259	-170.22554
F235	COMB1	0.75	11.62088108	-129.696442	-0.33456662	-21.4451599	-0.20432751	-63.8597717
F235	COMB1	1.5	11.62088108	-90.8411789	-0.33456662	-21.4451599	0.046597596	19.93735504
F235	COMB1	2.25	11.62088108	-51.9859085	-0.33456662	-21.4451599	0.297522694	72.40206909
F235	COMB1	3	11.62088108	-30.6581478	-0.33456662	-21.4451599	0.548447788	102.2981415
F235	COMB2	0	3.264843702	-99.5817566	-0.20965166	-17.8888283	-1.02770102	-104.059341
F235	COMB2	0.75	3.264843702	-83.8189545	-0.20965166	-17.8888283	-0.87046218	-34.68787
F235	COMB2	1.5	3.264843702	-58.5175514	-0.20965166	-17.8888283	-0.71322334	19.28451347
F235	COMB2	2.25	3.264843702	-33.2161484	-0.20965166	-17.8888283	-0.5559845	53.08850479
F235	COMB2	3	3.264843702	-17.4533443	-0.20965166	-17.8888283	-0.39874566	71.49341583
F235	COMB3	0	-10.0415077	-88.168541	-0.07037999	-15.3074379	-0.23486419	-71.0534439
F235	COMB3	0.75	-10.0415077	-72.4057388	-0.07037999	-15.3074379	-0.18207918	-10.2418919
F235	COMB3	1.5	-10.0415077	-47.1043358	-0.07037999	-15.3074379	-0.12929414	35.17057419
F235	COMB3	2.25	-10.0415077	-21.8029308	-0.07037999	-15.3074379	-0.07650912	60.41464615
F235	COMB3	3	-10.0415077	-6.04012775	-0.07037999	-15.3074379	-0.02372409	70.25963593
F236	D	0	0.457201123	-35.7188835	-0.01286036	0.002544783	-0.03179901	-24.6384239
F236	D	1.25	0.457201123	-23.0782604	-0.01286036	0.002544783	-0.01572356	14.27450657
F236	D	2.5	0.457201123	3.693608522	-0.01286036	0.002544783	0.000351896	26.61504364
F236	D	3.75	0.457201123	30.46547699	-0.01286036	0.002544783	0.016427353	5.040484905
F236	D	5	0.457201123	43.10609818	-0.01286036	0.002544783	0.032502808	-43.1064682
F236	L	0	0.102620915	-11.9757566	0.002125375	0.001461902	0.005644646	-8.61681557

F236	L	1.25	0.102620915	-8.06950569	0.002125375	0.001461902	0.002987927	4.725275993
F236	L	2.5	0.102620915	1.149244308	0.002125375	0.001461902	0.000331208	9.135074615
F236	L	3.75	0.102620915	10.36799431	0.002125375	0.001461902	-0.00232551	1.852164745
F236	L	5	0.102620915	14.27424526	0.002125375	0.001461902	-0.00498223	-14.3630371
F236	EX	0	-2.30792093	2.444261074	0.400039941	-0.0018607	1.044971228	7.133280277
F236	EX	1.25	-2.30792093	2.444261074	0.400039941	-0.0018607	0.544921219	4.077953815
F236	EX	2.5	-2.30792093	2.444261074	0.400039941	-0.0018607	0.044871297	1.022627711
F236	EX	3.75	-2.30792093	2.444261074	0.400039941	-0.0018607	-0.45517862	-2.03269839
F236	EX	5	-2.30792093	2.444261074	0.400039941	-0.0018607	-0.95522851	-5.08802462
F236	EY	0	-0.00314418	0.000986666	0.149550781	-0.01295605	0.376949459	0.003277396
F236	EY	1.25	-0.00314418	0.000986666	0.149550781	-0.01295605	0.19001095	0.002044062
F236	EY	2.5	-0.00314418	0.000986666	0.149550781	-0.01295605	0.003072467	0.00081073
F236	EY	3.75	-0.00314418	0.000986666	0.149550781	-0.01295605	-0.18386602	-0.0004226
F236	EY	5	-0.00314418	0.000986666	0.149550781	-0.01295605	-0.37080449	-0.00165594
F236	COMB1	0	0.712834775	-62.0238686	-0.01203184	0.005392782	-0.02912738	-43.3530121
F236	COMB1	1.25	0.712834775	-40.6051216	-0.01203184	0.005392782	-0.01408759	24.68984985
F236	COMB1	2.5	0.712834775	6.271121502	-0.01203184	0.005392782	0.000952208	46.55417252
F236	COMB1	3.75	0.712834775	53.14736557	-0.01203184	0.005392782	0.015992004	9.012044907
F236	COMB1	5	0.712834775	74.5661087	-0.01203184	0.005392782	0.0310318	-74.7086182
F236	COMB2	0	-1.87730181	-38.7470703	0.448315948	-0.00287446	1.168673396	-21.2006645
F236	COMB2	1.25	-1.87730181	-24.243948	0.448315948	-0.00287446	0.608278394	20.69802094
F236	COMB2	2.5	-1.87730181	6.770421982	0.448315948	-0.00287446	0.04788344	31.88202095
F236	COMB2	3.75	-1.87730181	37.78479004	0.448315948	-0.00287446	-0.51251149	3.771964788
F236	COMB2	5	-1.87730181	52.28791046	0.448315948	-0.00287446	-1.07290637	-55.0527763
F236	COMB3	0	-0.21790971	-40.5062103	0.270207018	-0.01105745	0.693351924	-26.3342171
F236	COMB3	1.25	-0.21790971	-26.0030899	0.270207018	-0.01105745	0.355593145	17.76339531
F236	COMB3	2.5	-0.21790971	5.011279106	0.270207018	-0.01105745	0.017834371	31.14632416
F236	COMB3	3.75	-0.21790971	36.02565002	0.270207018	-0.01105745	-0.31992441	5.235197067
F236	COMB3	5	-0.21790971	50.52877045	0.270207018	-0.01105745	-0.65768313	-51.3906136
F237	D	0	0.703067601	-39.638073	-0.01473453	-0.07808006	-0.04008222	-40.1520958
F237	D	1.25	0.703067601	-26.9974518	-0.01473453	-0.07808006	-0.02166406	3.659826279
F237	D	2.5	0.703067601	-0.22558312	-0.01473453	-0.07808006	-0.00324591	20.89935493
F237	D	3.75	0.703067601	26.54628563	-0.01473453	-0.07808006	0.015172252	4.223783493
F237	D	5	0.703067601	39.18690872	-0.01473453	-0.07808006	0.03359041	-39.0241776
F237	L	0	0.140131861	-13.1613522	-0.00217868	-0.02510836	-0.00487167	-13.490447
F237	L	1.25	0.140131861	-9.2551012	-0.00217868	-0.02510836	-0.00214832	1.333638906
F237	L	2.5	0.140131861	-0.03635133	-0.00217868	-0.02510836	0.000575029	7.225432873
F237	L	3.75	0.140131861	9.182398796	-0.00217868	-0.02510836	0.003298377	1.424517155
F237	L	5	0.140131861	13.0886488	-0.00217868	-0.02510836	0.006021725	-13.3086901
F237	EX	0	-3.13102865	1.531640649	0.319365382	0.012380202	0.81658119	3.72458744
F237	EX	1.25	-3.13102865	1.531640649	0.319365382	0.012380202	0.417374521	1.81003654
F237	EX	2.5	-3.13102865	1.531640649	0.319365382	0.012380202	0.018167779	-0.10451438
F237	EX	3.75	-3.13102865	1.531640649	0.319365382	0.012380202	-0.38103893	-2.01906514
F237	EX	5	-3.13102865	1.531640649	0.319365382	0.012380202	-0.78024566	-3.93361616
F237	EY	0	-0.00554796	0.001855655	0.268642515	-0.03117976	0.668934882	0.004384937
F237	EY	1.25	-0.00554796	0.001855655	0.268642515	-0.03117976	0.333131731	0.002065368
F237	EY	2.5	-0.00554796	0.001855655	0.268642515	-0.03117976	-0.00267146	-0.0002542
F237	EY	3.75	-0.00554796	0.001855655	0.268642515	-0.03117976	-0.33847463	-0.00257377
F237	EY	5	-0.00554796	0.001855655	0.268642515	-0.03117976	-0.67427778	-0.00489334
F237	COMB1	0	1.067892075	-68.623848	-0.02116732	-0.13386944	-0.05589333	-69.7672272
F237	COMB1	1.25	1.067892075	-47.2051048	-0.02116732	-0.13386944	-0.02943419	6.525613785
F237	COMB1	2.5	1.067892075	-0.32886186	-0.02116732	-0.13386944	-0.00297504	36.63991547
F237	COMB1	3.75	1.067892075	46.54738235	-0.02116732	-0.13386944	0.023484105	7.34776783
F237	COMB1	5	1.067892075	67.96612549	-0.02116732	-0.13386944	0.049943253	-68.1229172
F237	COMB2	0	-2.4599998	-44.1799698	0.399008036	-0.08690131	1.012255192	-42.5528603
F237	COMB2	1.25	-2.4599998	-29.6768494	0.399008036	-0.08690131	0.513495147	6.1369524
F237	COMB2	2.5	-2.4599998	1.337519646	0.399008036	-0.08690131	0.014735075	24.11207962
F237	COMB2	3.75	-2.4599998	32.35189056	0.399008036	-0.08690131	-0.48402494	2.793152571
F237	COMB2	5	-2.4599998	46.85501099	0.399008036	-0.08690131	-0.98278499	-49.2404556
F237	COMB3	0	-0.20973684	-45.2813873	0.366517216	-0.11873218	0.915983856	-45.2313385
F237	COMB3	1.25	-0.20973684	-30.7782669	0.366517216	-0.11873218	0.457837284	4.835244179
F237	COMB3	2.5	-0.20973684	0.236102313	0.366517216	-0.11873218	-0.00030924	24.18714333
F237	COMB3	3.75	-0.20973684	31.25047112	0.366517216	-0.11873218	-0.45845577	4.244987965
F237	COMB3	5	-0.20973684	45.75359344	0.366517216	-0.11873218	-0.91660225	-46.41185
F238	D	0	0.716650963	-39.4116859	-0.00064244	-0.00020073	0.003686681	-38.9145355
F238	D	1.25	0.716650963	-26.7710648	-0.00064244	-0.00020073	0.004489733	4.614398956
F238	D	2.5	0.716650963	0.00080391	-0.00064244	-0.00020073	0.005292784	21.57094193
F238	D	3.75	0.716650963	26.77267265	-0.00064244	-0.00020073	0.006095836	4.612389565
F238	D	5	0.716650963	39.41329575	-0.00064244	-0.00020073	0.006898887	-38.9185562
F238	L	0	0.133261099	-13.0832882	-0.00105431	0.000116044	-0.0009307	-13.1430187
F238	L	1.25	0.133261099	-9.17703724	-0.00105431	0.000116044	0.000387187	1.583486557
F238	L	2.5	0.133261099	0.041712955	-0.00105431	0.000116044	0.001705076	7.377699852
F238	L	3.75	0.133261099	9.260463715	-0.00105431	0.000116044	0.003022964	1.479204059
F238	L	5	0.133261099	13.16671276	-0.00105431	0.000116044	0.004340853	-13.3515835
F238	EX	0	-3.00063181	1.67891264	0.407889098	-0.03094001	1.03088367	4.205972195
F238	EX	1.25	-3.00063181	1.67891264	0.407889098	-0.03094001	0.521022201	2.107331276
F238	EX	2.5	-3.00063181	1.67891264	0.407889098	-0.03094001	0.011160781	0.008690344
F238	EX	3.75	-3.00063181	1.67891264	0.407889098	-0.03094001	-0.49870065	-2.08995056
F238	EX	5	-3.00063181	1.67891264	0.407889098	-0.03094001	-1.00856209	-4.18859148
F238	EY	0	-0.01258223	4.85831E-07	-1.4334E-05	-5.8546E-07	-0.00444754	0.000474135
F238	EY	1.25	-0.01258223	4.85831E-07	-1.4334E-05	-5.8546E-07	-0.00442962	0.000473528
F238	EY	2.5	-0.01258223	4.85831E-07	-1.4334E-05	-5.8546E-07	-0.0044117	0.00047292
F238	EY	3.75	-0.01258223	4.85831E-07	-1.4334E-05	-5.8546E-07	-0.00439379	0.000472313
F238	EY	5	-0.01258223	4.85831E-07	-1.4334E-05	-5.8546E-07	-0.00437587	0.000471706

F238	COMB1	0	1.073198915	-68.2272873	-0.00245783	-5.5206E-05	0.002934896	-67.7262726
F238	COMB1	1.25	1.073198915	-46.8085365	-0.00245783	-5.5206E-05	0.00600718	8.070857048
F238	COMB1	2.5	1.073198915	0.067705415	-0.00245783	-5.5206E-05	0.009079463	37.68945313
F238	COMB1	3.75	1.073198915	46.94395065	-0.00245783	-5.5206E-05	0.012151746	7.901593685
F238	COMB1	5	1.073198915	68.36269379	-0.00245783	-5.5206E-05	0.015224029	-68.0648041
F238	COMB2	0	-2.3151567	-43.765831	0.421154052	-0.03219731	1.069141388	-40.6469841
F238	COMB2	1.25	-2.3151567	-29.2627106	0.421154052	-0.03219731	0.542698801	7.525154114
F238	COMB2	2.5	-2.3151567	1.75165844	0.421154052	-0.03219731	0.016256245	24.9826088
F238	COMB2	3.75	-2.3151567	32.76602936	0.421154052	-0.03219731	-0.51018637	3.146008015
F238	COMB2	5	-2.3151567	47.26914978	0.421154052	-0.03219731	-1.03662896	-49.4052773
F238	COMB3	0	-0.16394962	-44.9746475	0.127463341	-0.00992093	0.323636293	-43.6749344
F238	COMB3	1.25	-0.16394962	-30.4715271	0.127463341	-0.00992093	0.164307073	6.00822401
F238	COMB3	2.5	-0.16394962	0.542841673	0.127463341	-0.00992093	0.004977881	24.97669983
F238	COMB3	3.75	-0.16394962	31.55721092	0.127463341	-0.00992093	-0.15435131	4.651119709
F238	COMB3	5	-0.16394962	46.06033325	0.127463341	-0.00992093	-0.31368053	-46.3891449
F239	D	0	0.700701714	-39.1188545	0.013016505	0.078313634	0.029276429	-38.9239311
F239	D	1.25	0.700701714	-26.4782333	0.013016505	0.078313634	0.013005796	4.238964081
F239	D	2.5	0.700701714	0.293635368	0.013016505	0.078313634	-0.00326484	20.82946968
F239	D	3.75	0.700701714	27.06550598	0.013016505	0.078313634	-0.01953547	3.504875422
F239	D	5	0.700701714	39.70612717	0.013016505	0.078313634	-0.0358061	-40.3921127
F239	L	0	0.140884131	-13.2090368	0.000356854	0.02524857	0.001430756	-13.6411371
F239	L	1.25	0.140884131	-9.30278587	0.000356854	0.02524857	0.000984688	1.242554903
F239	L	2.5	0.140884131	-0.08403603	0.000356854	0.02524857	0.00053862	7.193954468
F239	L	3.75	0.140884131	9.134714127	0.000356854	0.02524857	9.25519E-05	1.452644944
F239	L	5	0.140884131	13.04096508	0.000356854	0.02524857	-0.00035352	-13.2209568
F239	EX	0	-2.22579956	1.513970494	0.264434636	0.01232487	0.665968835	3.886955738
F239	EX	1.25	-2.22579956	1.513970494	0.264434636	0.01232487	0.335425586	1.99449265
F239	EX	2.5	-2.22579956	1.513970494	0.264434636	0.01232487	0.004882267	0.102029398
F239	EX	3.75	-2.22579956	1.513970494	0.264434636	0.01232487	-0.32566103	-1.79043376
F239	EX	5	-2.22579956	1.513970494	0.264434636	0.01232487	-0.65620434	-3.68289709
F239	EY	0	-0.00554725	-0.00185607	-0.26863381	0.031180521	-0.67425573	-0.00489459
F239	EY	1.25	-0.00554725	-0.00185607	-0.26863381	0.031180521	-0.33846346	-0.0025745
F239	EY	2.5	-0.00554725	-0.00185607	-0.26863381	0.031180521	-0.00267119	-0.00025441
F239	EY	3.75	-0.00554725	-0.00185607	-0.26863381	0.031180521	0.333121091	0.002065684
F239	EY	5	-0.00554725	-0.00185607	-0.26863381	0.031180521	0.668913364	0.004385776
F239	COMB1	0	1.066256642	-68.0770874	0.016190773	0.134374067	0.037420925	-68.5345383
F239	COMB1	1.25	1.066256642	-46.6583405	0.016190773	0.134374067	0.017182456	7.074844837
F239	COMB1	2.5	1.066256642	0.217904806	0.016190773	0.134374067	-0.00305601	36.50569153
F239	COMB1	3.75	1.066256642	47.09415054	0.016190773	0.134374067	-0.02329448	6.530082703
F239	COMB1	5	1.066256642	68.51289368	0.016190773	0.134374067	-0.04353295	-69.6240616
F239	COMB2	0	-1.52533472	-43.6692696	0.202849939	0.112760723	0.508078158	-41.1456299
F239	COMB2	1.25	-1.52533472	-29.1661491	0.202849939	0.112760723	0.254515737	6.905806065
F239	COMB2	2.5	-1.52533472	1.848220587	0.202849939	0.112760723	0.000953311	24.24255943
F239	COMB2	3.75	-1.52533472	32.86259079	0.202849939	0.112760723	-0.25260913	2.28525424
F239	COMB2	5	-1.52533472	47.36571121	0.202849939	0.112760723	-0.50617152	-50.386734
F239	COMB3	0	0.07316383	-44.7606926	-0.18498884	0.126804501	-0.46699741	-43.947834
F239	COMB3	1.25	0.07316383	-30.2575722	-0.18498884	0.126804501	-0.23576133	5.467878819
F239	COMB3	2.5	0.07316383	0.756797612	-0.18498884	0.126804501	-0.00452524	24.16891098
F239	COMB3	3.75	0.07316383	31.77116776	-0.18498884	0.126804501	0.226710826	3.575884819
F239	COMB3	5	0.07316383	46.27428818	-0.18498884	0.126804501	0.457946897	-47.7318268
F240	D	0	0.454975396	-43.2871208	0.012009136	-0.00237344	0.030412838	-43.5944939
F240	D	1.25	0.454975396	-30.6464996	0.012009136	-0.00237344	0.015401417	4.778731823
F240	D	2.5	0.454975396	-3.87462878	0.012009136	-0.00237344	0.000389996	26.57956696
F240	D	3.75	0.454975396	22.89723969	0.012009136	-0.00237344	-0.01462143	14.46530437
F240	D	5	0.454975396	35.53786469	0.012009136	-0.00237344	-0.02963285	-24.2213497
F240	L	0	0.103549048	-14.2936611	-0.00411276	-0.00145628	-0.00988689	-14.3767672
F240	L	1.25	0.103549048	-10.3874121	-0.00411276	-0.00145628	-0.00474595	1.862706184
F240	L	2.5	0.103549048	-1.16866148	-0.00411276	-0.00145628	0.000394998	9.169887543
F240	L	3.75	0.103549048	8.050088882	-0.00411276	-0.00145628	0.005535944	4.784359932
F240	L	5	0.103549048	11.95633888	-0.00411276	-0.00145628	0.01067689	-8.53345966
F240	EX	0	-1.11972094	2.403162003	0.276779234	-0.00159806	0.681582391	5.009894371
F240	EX	1.25	-1.11972094	2.403162003	0.276779234	-0.00159806	0.335608304	2.005941868
F240	EX	2.5	-1.11972094	2.403162003	0.276779234	-0.00159806	-0.01036572	-0.99801093
F240	EX	3.75	-1.11972094	2.403162003	0.276779234	-0.00159806	-0.35633975	-4.00196362
F240	EX	5	-1.11972094	2.403162003	0.276779234	-0.00159806	-0.70231384	-7.0059166
F240	EY	0	-0.00314438	-0.00098646	-0.14954758	0.012956028	-0.37079644	-0.00165536
F240	EY	1.25	-0.00314438	-0.00098646	-0.14954758	0.012956028	-0.18386197	-0.00042228
F240	EY	2.5	-0.00314438	-0.00098646	-0.14954758	0.012956028	0.003072515	0.000810797
F240	EY	3.75	-0.00314438	-0.00098646	-0.14954758	0.012956028	0.190006986	0.002043877
F240	EY	5	-0.00314438	-0.00098646	-0.14954758	0.012956028	0.376941472	0.003276957
F240	COMB1	0	0.711648941	-74.8143997	0.007830554	-0.00517817	0.020676378	-75.3162231
F240	COMB1	1.25	0.711648941	-53.3956566	0.007830554	-0.00517817	0.010888186	8.714808464
F240	COMB1	2.5	0.711648941	-6.51941299	0.007830554	-0.00517817	0.001099993	46.5673027
F240	COMB1	3.75	0.711648941	40.3568306	0.007830554	-0.00517817	-0.0086882	25.01334
F240	COMB1	5	0.711648941	61.77557755	0.007830554	-0.00517817	-0.01847639	-42.7191544
F240	COMB2	0	-0.6495595	-47.4670181	0.250673085	-0.00052368	0.617455959	-45.1181793
F240	COMB2	1.25	-0.6495595	-32.9638977	0.250673085	-0.00052368	0.30411461	7.680437565
F240	COMB2	2.5	-0.6495595	-1.94952667	0.250673085	-0.00052368	-0.00922676	29.76437569
F240	COMB2	3.75	-0.6495595	29.06484222	0.250673085	-0.00052368	-0.32256812	12.55425358
F240	COMB2	5	-0.6495595	43.56796646	0.250673085	-0.00052368	-0.6359095	-35.3705482
F240	COMB3	0	0.154328436	-49.1980209	-0.05852543	0.010149603	-0.14581873	-48.7265205
F240	COMB3	1.25	0.154328436	-34.6948967	-0.05852543	0.010149603	-0.07266193	6.23584938
F240	COMB3	2.5	0.154328436	-3.6805284	-0.05852543	0.010149603	0.000494859	30.48353958
F240	COMB3	3.75	0.154328436	27.33383942	-0.05852543	0.010149603	0.073651649	15.43717003

F240	COMB3	5	0.154328436	41.83696365	-0.05852543	0.010149603	0.146808431	-30.3238811
F241	D	0	4.537731171	17.96102715	-0.23300892	-12.1838255	-0.334369	54.34392548
F241	D	0.75	4.537731171	30.30133629	-0.23300892	-12.1838255	-0.15961237	36.47933197
F241	D	1.5	4.537731171	46.382267	-0.23300892	-12.1838255	0.015144265	7.956777573
F241	D	2.25	4.537731171	62.46319962	-0.23300892	-12.1838255	0.189900905	-33.0940514
F241	D	3	4.537731171	74.80350494	-0.23300892	-12.1838255	0.364657551	-84.8028412
F241	L	0	1.382945418	6.029358387	-0.05654062	-4.35338736	-0.08055787	11.46051407
F241	L	0.75	1.382945418	6.73248291	-0.05654062	-4.35338736	-0.03815242	6.762715816
F241	L	1.5	1.382945418	8.84185791	-0.05654062	-4.35338736	0.004253026	1.010230184
F241	L	2.25	1.382945418	10.95123196	-0.05654062	-4.35338736	0.046658475	-6.50006628
F241	L	3	1.382945418	11.65435696	-0.05654062	-4.35338736	0.08906392	-15.0650501
F241	EX	0	-0.94892567	-0.97220945	0.213851303	3.468541861	0.991149604	-1.83703136
F241	EX	0.75	-0.94892567	-0.97220945	0.213851303	3.468541861	0.830761135	-1.10787451
F241	EX	1.5	-0.94892567	-0.97220945	0.213851303	3.468541861	0.670372784	-0.37871772
F241	EX	2.25	-0.94892567	-0.97220945	0.213851303	3.468541861	0.509984374	0.350439131
F241	EX	3	-0.94892567	-0.97220945	0.213851303	3.468541861	0.349595934	1.079596043
F241	EY	0	-16.5803967	14.11078548	-0.16935551	-0.00248557	-0.18602961	0.104717359
F241	EY	0.75	-16.5803967	14.11078548	-0.16935551	-0.00248557	-0.05901301	-10.4783688
F241	EY	1.5	-16.5803967	14.11078548	-0.16935551	-0.00248557	0.068003595	-21.0614548
F241	EY	2.25	-16.5803967	14.11078548	-0.16935551	-0.00248557	0.195020184	-31.6445408
F241	EY	3	-16.5803967	14.11078548	-0.16935551	-0.00248557	0.322036803	-42.2276268
F241	COMB1	0	7.657989979	31.20020676	-0.37007567	-21.58601	-0.53013539	83.54953003
F241	COMB1	0.75	7.657989979	47.13357544	-0.37007567	-21.58601	-0.25257871	54.59554291
F241	COMB1	1.5	7.657989979	69.80569458	-0.37007567	-21.58601	0.02497796	11.16450119
F241	COMB1	2.25	7.657989979	92.47781372	-0.37007567	-21.58601	0.30253464	-50.1129684
F241	COMB1	3	7.657989979	108.4111786	-0.37007567	-21.58601	0.580091298	-125.867485
F241	COMB2	0	-1.00471759	24.19698715	-0.09448055	-10.5751753	0.590777338	58.80284119
F241	COMB2	0.75	-1.00471759	37.37579727	-0.09448055	-10.5751753	0.661637723	35.9862175
F241	COMB2	1.5	-1.00471759	54.92522812	-0.09448055	-10.5751753	0.732498169	1.646507978
F241	COMB2	2.25	-1.00471759	72.47466278	-0.09448055	-10.5751753	0.803358555	-46.4015999
F241	COMB2	3	-1.00471759	85.65346527	-0.09448055	-10.5751753	0.874218941	-105.972794
F241	COMB3	0	-12.5080824	35.26840591	-0.37292978	-13.0743523	-0.25958216	60.20247269
F241	COMB3	0.75	-12.5080824	48.44721222	-0.37292978	-13.0743523	0.020115104	29.08228493
F241	COMB3	1.5	-12.5080824	65.99664307	-0.37292978	-13.0743523	0.299812376	-13.5609846
F241	COMB3	2.25	-12.5080824	83.54607391	-0.37292978	-13.0743523	0.579509616	-69.9126511
F241	COMB3	3	-12.5080824	96.72488403	-0.37292978	-13.0743523	0.859206915	-137.787399
F242	D	0	7.834365845	41.627388	-0.09654061	1.716202855	-0.15140569	81.24889374
F242	D	0.75	7.834365845	48.3380127	-0.09654061	1.716202855	-0.07900026	47.97945404
F242	D	1.5	7.834365845	62.52988434	-0.09654061	1.716202855	-0.00659483	6.871581078
F242	D	2.25	7.834365845	76.72174835	-0.09654061	1.716202855	0.065810606	-45.8153458
F242	D	3	7.834365845	83.43237305	-0.09654061	1.716202855	0.138216048	-106.340706
F242	L	0	2.849854946	13.80637074	-0.02016111	0.443753123	-0.0284353	25.54606819
F242	L	0.75	2.849854946	15.21262074	-0.02016111	0.443753123	-0.01331447	14.83973026
F242	L	1.5	2.849854946	19.43136978	-0.02016111	0.443753123	0.001806355	2.02401948
F242	L	2.25	2.849854946	23.65011597	-0.02016111	0.443753123	0.016927183	-14.3073139
F242	L	3	2.849854946	25.05636787	-0.02016111	0.443753123	0.032048013	-32.7480202
F242	EX	0	-0.2867876	0.654708207	-0.6173473	4.282073498	-0.45009416	0.684043407
F242	EX	0.75	-0.2867876	0.654708207	-0.6173473	4.282073498	0.012916175	0.193012357
F242	EX	1.5	-0.2867876	0.654708207	-0.6173473	4.282073498	0.475926489	-0.29801863
F242	EX	2.25	-0.2867876	0.654708207	-0.6173473	4.282073498	0.93893683	-0.78904969
F242	EX	3	-0.2867876	0.654708207	-0.6173473	4.282073498	1.40194726	-1.28008068
F242	EY	0	-16.5188808	13.47698689	-0.47365031	0.000230711	-0.51797509	0.105030656
F242	EY	0.75	-16.5188808	13.47698689	-0.47365031	0.000230711	-0.16273749	-10.0027065
F242	EY	1.5	-16.5188808	13.47698689	-0.47365031	0.000230711	0.192500114	-20.1104431
F242	EY	2.25	-16.5188808	13.47698689	-0.47365031	0.000230711	0.547737718	-30.2181797
F242	EY	3	-16.5188808	13.47698689	-0.47365031	0.000230711	0.902975321	-40.3259163
F242	COMB1	0	13.96100712	72.0430603	-0.14810652	2.769448519	-0.22718331	138.3723755
F242	COMB1	0.75	13.96100712	82.34580994	-0.14810652	2.769448519	-0.11610347	81.31890869
F242	COMB1	1.5	13.96100712	106.1260529	-0.14810652	2.769448519	-0.00502362	11.48432827
F242	COMB1	2.25	13.96100712	129.9062805	-0.14810652	2.769448519	0.106056221	-77.8701172
F242	COMB1	3	13.96100712	140.2090302	-0.14810652	2.769448519	0.217136085	-180.005676
F242	COMB2	0	3.623515844	52.98064041	-0.89587271	6.373814106	-0.79694271	94.09941864
F242	COMB2	0.75	3.623515844	60.46976089	-0.89587271	6.373814106	-0.1250384	52.10185623
F242	COMB2	1.5	3.623515844	76.70013428	-0.89587271	6.373814106	0.54686588	1.209487438
F242	COMB2	2.25	3.623515844	92.93049622	-0.89587271	6.373814106	1.218770146	-62.9483109
F242	COMB2	3	3.623515844	100.4196243	-0.89587271	6.373814106	1.890674591	-136.000916
F242	COMB3	0	-8.31137466	62.41483688	-0.7995156	3.290890694	-0.85358661	93.68410492
F242	COMB3	0.75	-8.31137466	69.90396118	-0.7995156	3.290890694	-0.25395009	44.61089706
F242	COMB3	1.5	-8.31137466	86.13433075	-0.7995156	3.290890694	0.345686406	-13.3571148
F242	COMB3	2.25	-8.31137466	102.3646927	-0.7995156	3.290890694	0.945322931	-84.5905533
F242	COMB3	3	-8.31137466	109.8538132	-0.7995156	3.290890694	1.544959426	-164.718796
F243	D	0	4.70501709	38.55220795	-0.01756969	0.028545914	-5.2379E-05	78.44325256
F243	D	0.75	4.70501709	45.26283264	-0.01756969	0.028545914	0.01312488	47.48019791
F243	D	1.5	4.70501709	59.45469666	-0.01756969	0.028545914	0.026302138	8.678715706
F243	D	2.25	4.70501709	73.6465683	-0.01756969	0.028545914	0.039479401	-41.7018204
F243	D	3	4.70501709	80.35719299	-0.01756969	0.028545914	0.052656658	-99.920784
F243	L	0	1.666786551	12.83375359	0.006835893	-0.00025289	0.009168972	24.70545006
F243	L	0.75	1.666786551	14.24000359	0.006835893	-0.00025289	0.004042055	14.72857475
F243	L	1.5	1.666786551	18.45875168	0.006835893	-0.00025289	-0.00108486	2.642326832
F243	L	2.25	1.666786551	22.67749977	0.006835893	-0.00025289	-0.00621178	-12.9595442
F243	L	3	1.666786551	24.08374977	0.006835893	-0.00025289	-0.0113387	-30.6707916
F243	EX	0	-1.14787531	0.324980319	-1.08042431	4.104330063	-1.18922865	-0.08544239
F243	EX	0.75	-1.14787531	0.324980319	-1.08042431	4.104330063	-0.37891069	-0.32917753
F243	EX	1.5	-1.14787531	0.324980319	-1.08042431	4.104330063	0.431407273	-0.57291275

F243	EX	2.25	-1.14787531	0.324980319	-1.08042431	4.104330063	1.241725206	-0.81664789
F243	EX	3	-1.14787531	0.324980319	-1.08042431	4.104330063	2.0520432	-1.06038296
F243	EY	0	-18.5258102	11.92434978	-0.31263739	-0.00077208	-0.33117417	0.053594779
F243	EY	0.75	-18.5258102	11.92434978	-0.31263739	-0.00077208	-0.09669618	-8.8896656
F243	EY	1.5	-18.5258102	11.92434978	-0.31263739	-0.00077208	0.137781784	-17.8329258
F243	EY	2.25	-18.5258102	11.92434978	-0.31263739	-0.00077208	0.372259766	-26.776186
F243	EY	3	-18.5258102	11.92434978	-0.31263739	-0.00077208	0.606737733	-35.7194443
F243	COMB1	0	8.312879562	66.79665375	-0.01014619	0.03385048	0.014607501	133.6606293
F243	COMB1	0.75	8.312879562	77.09940338	-0.01014619	0.03385048	0.022217143	80.54196167
F243	COMB1	1.5	8.312879562	100.8796387	-0.01014619	0.03385048	0.029826785	14.64218235
F243	COMB1	2.25	8.312879562	124.6598816	-0.01014619	0.03385048	0.037436426	-70.7774582
F243	COMB1	3	8.312879562	134.9626312	-0.01014619	0.03385048	0.045046069	-168.97821
F243	COMB2	0	-1.55837512	48.61497498	-1.2330147	4.27763176	-1.33233821	90.07608032
F243	COMB2	0.75	-1.55837512	56.10409927	-1.2330147	4.27763176	-0.40757748	51.35276794
F243	COMB2	1.5	-1.55837512	72.33446503	-1.2330147	4.27763176	0.517183304	3.734648705
F243	COMB2	2.25	-1.55837512	88.56483459	-1.2330147	4.27763176	1.441944122	-57.1488991
F243	COMB2	3	-1.55837512	96.05395508	-1.2330147	4.27763176	2.366704941	-126.927246
F243	COMB3	0	-14.3483744	57.14538956	-0.68489778	1.321946859	-0.71950668	90.17699432
F243	COMB3	0.75	-14.3483744	64.63451385	-0.68489778	1.321946859	-0.20583349	45.05587006
F243	COMB3	1.5	-14.3483744	80.86487579	-0.68489778	1.321946859	0.307839662	-8.96005344
F243	COMB3	2.25	-14.3483744	97.09524536	-0.68489778	1.321946859	0.821512878	-76.2414093
F243	COMB3	3	-14.3483744	104.5843658	-0.68489778	1.321946859	1.335186005	-152.417572
F244	D	0	4.706026554	38.51564026	0.022610636	0.026756264	0.004483217	78.39311218
F244	D	0.75	4.706026554	45.22626495	0.022610636	0.026756264	-0.01247475	47.45748901
F244	D	1.5	4.706026554	59.41813278	0.022610636	0.026756264	-0.02943273	8.683427811
F244	D	2.25	4.706026554	73.61000061	0.022610636	0.026756264	-0.0463907	-41.6696854
F244	D	3	4.706026554	80.32062531	0.022610636	0.026756264	-0.06334867	-99.8612289
F244	L	0	1.766466141	12.93904495	-0.00197372	-0.05785248	-0.0061588	24.85622787
F244	L	0.75	1.766466141	14.34529495	-0.00197372	-0.05785248	-0.00467851	14.80038452
F244	L	1.5	1.766466141	18.56404305	-0.00197372	-0.05785248	-0.00319821	2.635168552
F244	L	2.25	1.766466141	22.78279305	-0.00197372	-0.05785248	-0.00171792	-13.0456705
F244	L	3	1.766466141	24.18904114	-0.00197372	-0.05785248	-0.00023763	-30.835886
F244	EX	0	1.105719328	-0.31917509	-1.32037783	4.113471985	-1.59798896	0.09889327
F244	EX	0.75	1.105719328	-0.31917509	-1.32037783	4.113471985	-0.60770589	0.338274539
F244	EX	1.5	1.105719328	-0.31917509	-1.32037783	4.113471985	0.382577181	0.577655792
F244	EX	2.25	1.105719328	-0.31917509	-1.32037783	4.113471985	1.372860193	0.817037046
F244	EX	3	1.105719328	-0.31917509	-1.32037783	4.113471985	2.363143206	1.0564183
F244	EY	0	-18.5263329	11.92432117	0.3126598	0.000772928	0.331198156	0.053584568
F244	EY	0.75	-18.5263329	11.92432117	0.3126598	0.000772928	0.096703388	-8.88965416
F244	EY	1.5	-18.5263329	11.92432117	0.3126598	0.000772928	-0.1377914	-17.8328915
F244	EY	2.25	-18.5263329	11.92432117	0.3126598	0.000772928	-0.37228617	-26.7761307
F244	EY	3	-18.5263329	11.92432117	0.3126598	0.000772928	-0.60678095	-35.7193718
F244	COMB1	0	8.473577499	66.92124176	0.02397481	-0.06045644	-0.00447421	133.8417053
F244	COMB1	0.75	8.473577499	77.22399139	0.02397481	-0.06045644	-0.02245531	80.62960052
F244	COMB1	1.5	8.473577499	101.0042267	0.02397481	-0.06045644	-0.04043642	14.63638306
F244	COMB1	2.25	8.473577499	124.7844696	0.02397481	-0.06045644	-0.05841752	-70.8766937
F244	COMB1	3	8.473577499	135.0872192	0.02397481	-0.06045644	-0.07639862	-169.170883
F244	COMB2	0	0.806389511	47.94303894	-1.24498379	4.267557621	-1.54682374	90.26171875
F244	COMB2	0.75	0.806389511	55.43215942	-1.24498379	4.267557621	-0.61308622	52.04235458
F244	COMB2	1.5	0.806389511	71.66252899	-1.24498379	4.267557621	0.320651293	4.928190231
F244	COMB2	2.25	0.806389511	87.89289856	-1.24498379	4.267557621	1.254388809	-55.4514046
F244	COMB2	3	0.806389511	95.38201904	-1.24498379	4.267557621	2.188126326	-124.7258
F244	COMB3	0	-13.6065836	56.93722153	-0.06450678	1.30642581	-0.15284109	90.22989655
F244	COMB3	0.75	-13.6065836	64.42634583	-0.06450678	1.30642581	-0.10446101	45.26490402
F244	COMB3	1.5	-13.6065836	80.65670776	-0.06450678	1.30642581	-0.05608094	-8.59489822
F244	COMB3	2.25	-13.6065836	96.88707733	-0.06450678	1.30642581	-0.00770087	-75.7201309
F244	COMB3	3	-13.6065836	104.3761978	-0.06450678	1.30642581	0.040679194	-151.740158
F245	D	0	7.912635803	41.75303268	0.099777482	-1.83999813	0.153030142	81.43763733
F245	D	0.75	7.912635803	48.46365738	0.099777482	-1.83999813	0.078197047	48.07396698
F245	D	1.5	7.912635803	62.65552139	0.099777482	-1.83999813	0.003363957	6.871865273
F245	D	2.25	7.912635803	76.84739685	0.099777482	-1.83999813	-0.07146914	-45.9092903
F245	D	3	7.912635803	83.55801392	0.099777482	-1.83999813	-0.14630222	-106.528877
F245	L	0	3.780274153	13.76739025	0.025007045	-0.5847736	0.031603646	29.91140938
F245	L	0.75	3.780274153	16.4392643	0.025007045	-0.5847736	0.012848366	18.91789818
F245	L	1.5	3.780274153	24.45488739	0.025007045	-0.5847736	-0.00590691	3.916581631
F245	L	2.25	3.780274153	32.47050858	0.025007045	-0.5847736	-0.02466219	-17.7644196
F245	L	3	3.780274153	35.14238358	0.025007045	-0.5847736	-0.04341746	-43.4532318
F245	EX	0	0.153917074	-0.64354497	-1.31611538	4.244003773	-1.67928767	-0.66611171
F245	EX	0.75	0.153917074	-0.64354497	-1.31611538	4.244003773	-0.6922015	-0.18345311
F245	EX	1.5	0.153917074	-0.64354497	-1.31611538	4.244003773	0.294884712	0.299205482
F245	EX	2.25	0.153917074	-0.64354497	-1.31611538	4.244003773	1.281970859	0.781864107
F245	EX	3	0.153917074	-0.64354497	-1.31611538	4.244003773	2.269057035	1.264522672
F245	EY	0	-16.5189152	13.47699547	0.47363618	-0.0002306	0.51796031	0.105029941
F245	EY	0.75	-16.5189152	13.47699547	0.47363618	-0.0002306	0.162733272	-10.0027142
F245	EY	1.5	-16.5189152	13.47699547	0.47363618	-0.0002306	-0.19249375	-20.1104565
F245	EY	2.25	-16.5189152	13.47699547	0.47363618	-0.0002306	-0.54772079	-30.2182007
F245	EY	3	-16.5189152	13.47699547	0.47363618	-0.0002306	-0.90294778	-40.325943
F245	COMB1	0	15.54360199	72.1314621	0.159744248	-3.14363551	0.234202012	145.5834198
F245	COMB1	0.75	15.54360199	84.45921326	0.159744248	-3.14363551	0.114393845	87.95739746
F245	COMB1	1.5	15.54360199	114.3144455	0.159744248	-3.14363551	-0.00541431	14.51276875
F245	COMB1	2.25	15.54360199	144.169693	0.159744248	-3.14363551	-0.12522247	-83.5142212
F245	COMB1	3	15.54360199	156.4974365	0.159744248	-3.14363551	-0.24503063	-197.359818
F245	COMB2	0	4.454899788	51.75659943	-1.10034037	2.276269436	-1.40426838	94.27526855
F245	COMB2	0.75	4.454899788	59.64439392	-1.10034037	2.276269436	-0.57901341	53.09607315

F245	COMB2	1.5	4.454899788	77.07077026	-1.10034037	2.276269436	0.246241614	2.424065828
F245	COMB2	2.25	4.454899788	94.49716187	-1.10034037	2.276269436	1.071496606	-62.5100517
F245	COMB2	3	4.454899788	102.3849564	-1.10034037	2.276269436	1.896751642	-136.936981
F245	COMB3	0	-7.79732275	62.12554169	0.195385233	-0.77958268	0.185519502	94.8320694
F245	COMB3	0.75	-7.79732275	70.01333618	0.195385233	-0.77958268	0.038980611	45.87616348
F245	COMB3	1.5	-7.79732275	87.43972015	0.195385233	-0.77958268	-0.10755827	-12.5725479
F245	COMB3	2.25	-7.79732275	104.8661041	0.195385233	-0.77958268	-0.25409716	-85.283371
F245	COMB3	3	-7.79732275	112.7538986	0.195385233	-0.77958268	-0.40063605	-167.487
F246	D	0	5.880781651	17.88353348	0.233567283	11.97684383	0.331935138	60.77066422
F246	D	0.75	5.880781651	32.09415436	0.233567283	11.97684383	0.156759739	42.49661636
F246	D	1.5	5.880781651	53.78602219	0.233567283	11.97684383	-0.01841567	10.75913715
F246	D	2.25	5.880781651	75.47788239	0.233567283	11.97684383	-0.19359107	-38.1823883
F246	D	3	5.880781651	89.68850708	0.233567283	11.97684383	-0.36876649	-100.587349
F246	L	0	2.847570181	6.035743237	0.060500998	4.313614845	0.08228077	18.35510254
F246	L	0.75	2.847570181	8.707616806	0.060500998	4.313614845	0.036905032	13.16032887
F246	L	1.5	2.847570181	16.7232399	0.060500998	4.313614845	-0.0084707	3.957744122
F246	L	2.25	2.847570181	24.73886299	0.060500998	4.313614845	-0.05384644	-11.9245234
F246	L	3	2.847570181	27.41073608	0.060500998	4.313614845	-0.09922218	-31.8146
F246	EX	0	1.125785708	0.957246959	-1.13706338	3.426533699	-1.41807091	1.805652261
F246	EX	0.75	1.125785708	0.957246959	-1.13706338	3.426533699	-0.56527364	1.087717295
F246	EX	1.5	1.125785708	0.957246959	-1.13706338	3.426533699	0.287523597	0.369782329
F246	EX	2.25	1.125785708	0.957246959	-1.13706338	3.426533699	1.140320897	-0.34815267
F246	EX	3	1.125785708	0.957246959	-1.13706338	3.426533699	1.993118167	-1.0660876
F246	EY	0	-16.5803909	14.11079407	0.169352338	0.002486146	0.186025068	0.104717568
F246	EY	0.75	-16.5803909	14.11079407	0.169352338	0.002486146	0.059010863	-10.4783745
F246	EY	1.5	-16.5803909	14.11079407	0.169352338	0.002486146	-0.06800334	-21.0614662
F246	EY	2.25	-16.5803909	14.11079407	0.169352338	0.002486146	-0.19501755	-31.644558
F246	EY	3	-16.5803909	14.11079407	0.169352338	0.002486146	-0.32203174	-42.2276497
F246	COMB1	0	11.61305046	31.11742973	0.377082318	21.27399635	0.529971421	102.2929611
F246	COMB1	0.75	11.61305046	52.44517136	0.377082318	21.27399635	0.247159734	72.05246735
F246	COMB1	1.5	11.61305046	91.30040741	0.377082318	21.27399635	-0.03565193	19.2433548
F246	COMB1	2.25	11.61305046	130.1556396	0.377082318	21.27399635	-0.31846359	-64.8981018
F246	COMB1	3	11.61305046	151.4833832	0.377082318	21.27399635	-0.60127527	-171.60817
F246	COMB2	0	3.014170647	26.11462021	-0.85921121	17.48171997	-1.03465521	71.4928894
F246	COMB2	0.75	3.014170647	41.87741089	-0.85921121	17.48171997	-0.39024699	46.59204865
F246	COMB2	1.5	3.014170647	67.17879486	-0.85921121	17.48171997	0.254161149	6.292146206
F246	COMB2	2.25	3.014170647	92.4801712	-0.85921121	17.48171997	0.898569345	-54.1761093
F246	COMB2	3	3.014170647	108.2429657	-0.85921121	17.48171997	1.542977571	-130.043427
F246	COMB3	0	-9.98298264	35.79683685	0.083948433	15.01644325	0.123084314	70.26979065
F246	COMB3	0.75	-9.98298264	51.55962753	0.083948433	15.01644325	0.060123019	38.10728836
F246	COMB3	1.5	-9.98298264	76.86100769	0.083948433	15.01644325	-0.00283829	-9.45427513
F246	COMB3	2.25	-9.98298264	102.162384	0.083948433	15.01644325	-0.06579961	-77.1841888
F246	COMB3	3	-9.98298264	117.9251785	0.083948433	15.01644325	-0.12876089	-160.313156
F247	D	0	5.961791515	-39.5543404	-0.04396273	-0.01074738	-0.11966662	-27.8759289
F247	D	1.25	5.961791515	-25.1137199	-0.04396273	-0.01074738	-0.06471321	14.70632553
F247	D	2.5	5.961791515	3.458151102	-0.04396273	-0.01074738	-0.0097598	28.46618652
F247	D	3.75	5.961791515	32.03002167	-0.04396273	-0.01074738	0.045193613	6.060947418
F247	D	5	5.961791515	46.4706459	-0.04396273	-0.01074738	0.100147024	-45.1666832
F247	L	0	2.129516602	-12.1640491	-0.00060323	-0.00091068	-0.00185069	-8.99407864
F247	L	1.25	2.129516602	-8.25779915	-0.00060323	-0.00091068	-0.00109664	4.583379269
F247	L	2.5	2.129516602	0.960951746	-0.00060323	-0.00091068	-0.0003426	9.228544235
F247	L	3.75	2.129516602	10.17970181	-0.00060323	-0.00091068	0.000411441	2.180999756
F247	L	5	2.129516602	14.08595181	-0.00060323	-0.00091068	0.001165484	-13.7988367
F247	EX	0	-18.800127	19.85430527	0.364453495	0.004936791	0.931984723	52.89096069
F247	EX	1.25	-18.800127	19.85430527	0.364453495	0.004936791	0.476417899	28.07308006
F247	EX	2.5	-18.800127	19.85430527	0.364453495	0.004936791	0.020851018	3.255194426
F247	EX	3.75	-18.800127	19.85430527	0.364453495	0.004936791	-0.43471587	-21.5626907
F247	EX	5	-18.800127	19.85430527	0.364453495	0.004936791	-0.89028275	-46.3805771
F247	EY	0	-0.00100006	0.000689174	0.234456763	0.085689791	0.655222237	0.002046654
F247	EY	1.25	-0.00100006	0.000689174	0.234456763	0.085689791	0.362151265	0.001185186
F247	EY	2.5	-0.00100006	0.000689174	0.234456763	0.085689791	0.069080286	0.000323719
F247	EY	3.75	-0.00100006	0.000689174	0.234456763	0.085689791	-0.22399069	-0.00053775
F247	EY	5	-0.00100006	0.000689174	0.234456763	0.085689791	-0.51706165	-0.00139922
F247	COMB1	0	10.56137657	-66.9276886	-0.05372045	-0.01435394	-0.14656104	-47.8416405
F247	COMB1	1.25	10.56137657	-43.3489418	-0.05372045	-0.01435394	-0.07941048	24.98099899
F247	COMB1	2.5	10.56137657	5.68730402	-0.05372045	-0.01435394	-0.01225992	48.9250946
F247	COMB1	3.75	10.56137657	54.72354889	-0.05372045	-0.01435394	0.05489064	10.76273632
F247	COMB1	5	10.56137657	78.3022995	-0.05372045	-0.01435394	0.122041203	-76.2781601
F247	COMB2	0	-12.5277662	-24.8143101	0.404712349	0.02053025	1.044766307	22.63993073
F247	COMB2	1.25	-12.5277662	-8.42118835	0.404712349	0.02053025	0.538875878	45.94141769
F247	COMB2	2.5	-12.5277662	24.48318291	0.404712349	0.02053025	0.032985386	36.16571426
F247	COMB2	3.75	-12.5277662	57.38755035	0.404712349	0.02053025	-0.47290507	-15.2665434
F247	COMB2	5	-12.5277662	73.7806778	0.404712349	0.02053025	-0.97879553	-99.7759857
F247	COMB3	0	1.007589102	-39.1089058	0.314631581	0.079957753	0.85532558	-15.4400568
F247	COMB3	1.25	1.007589102	-22.7157822	0.314631581	0.079957753	0.462036133	25.72967148
F247	COMB3	2.5	1.007589102	10.18858814	0.314631581	0.079957753	0.068746664	33.82221222
F247	COMB3	3.75	1.007589102	43.09295654	0.314631581	0.079957753	-0.32454282	0.258197933
F247	COMB3	5	1.007589102	59.48608398	0.314631581	0.079957753	-0.71783227	-66.3830032
F248	D	0	5.127753735	-42.5014458	-0.04407374	-0.00110645	-0.10244832	-41.4074478
F248	D	1.25	5.127753735	-28.0608234	-0.04407374	-0.00110645	-0.04735615	4.858683586
F248	D	2.5	5.127753735	0.511047125	-0.04407374	-0.00110645	0.007736023	22.30242348
F248	D	3.75	5.127753735	29.08291626	-0.04407374	-0.00110645	0.062828198	3.581066132
F248	D	5	5.127753735	43.5235405	-0.04407374	-0.00110645	0.117920361	-43.9626846
F248	L	0	1.931218028	-12.9553738	-0.00398069	0.004547882	-0.00988058	-12.9955387

F248	L	1.25	1.931218028	-9.04912376	-0.00398069	0.004547882	-0.00490471	1.571074367
F248	L	2.5	1.931218028	0.169626623	-0.00398069	0.004547882	7.11504E-05	7.205395699
F248	L	3.75	1.931218028	9.38837719	-0.00398069	0.004547882	0.005047014	1.147007823
F248	L	5	1.931218028	13.29462624	-0.00398069	0.004547882	0.010022877	-13.8436718
F248	EX	0	-14.6125946	16.84096718	0.297925502	0.00171071	0.770049751	41.87281036
F248	EX	1.25	-14.6125946	16.84096718	0.297925502	0.00171071	0.397642881	20.82159996
F248	EX	2.5	-14.6125946	16.84096718	0.297925502	0.00171071	0.025235988	-0.22960877
F248	EX	3.75	-14.6125946	16.84096718	0.297925502	0.00171071	-0.34717089	-21.280817
F248	EX	5	-14.6125946	16.84096718	0.297925502	0.00171071	-0.71957773	-42.3320274
F248	EY	0	-0.00121715	-0.00024747	0.505060732	0.204746678	1.228865743	-0.00055552
F248	EY	1.25	-0.00121715	-0.00024747	0.505060732	0.204746678	0.597539783	-0.00024618
F248	EY	2.5	-0.00121715	-0.00024747	0.505060732	0.204746678	-0.03378613	6.31573E-05
F248	EY	3.75	-0.00121715	-0.00024747	0.505060732	0.204746678	-0.66511208	0.000372498
F248	EY	5	-0.00121715	-0.00024747	0.505060732	0.204746678	-1.29643798	0.00068184
F248	COMB1	0	9.243253708	-71.7303391	-0.05925759	0.005948873	-0.1387469	-70.4817963
F248	COMB1	1.25	9.243253708	-48.1515846	-0.05925759	0.005948873	-0.06467492	8.344140053
F248	COMB1	2.5	9.243253708	0.884659171	-0.05925759	0.005948873	0.009397069	38.29154205
F248	COMB1	3.75	9.243253708	49.92090225	-0.05925759	0.005948873	0.083469056	6.132491589
F248	COMB1	5	9.243253708	73.49964905	-0.05925759	0.005948873	0.157541037	-74.905098
F248	COMB2	0	-9.1319437	-31.2771397	0.419915676	0.066536598	1.073411107	-4.23323107
F248	COMB2	1.25	-9.1319437	-14.884016	0.419915676	0.066536598	0.548516452	27.14678383
F248	COMB2	2.5	-9.1319437	18.02035332	0.419915676	0.066536598	0.023621853	25.44961929
F248	COMB2	3.75	-9.1319437	50.92472458	0.419915676	0.066536598	-0.50127274	-17.9041023
F248	COMB2	5	-9.1319437	67.31784821	0.419915676	0.066536598	-1.02616739	-94.3350067
F248	COMB3	0	1.388229966	-43.4028168	0.576628983	0.215793699	1.422191501	-34.382061
F248	COMB3	1.25	1.388229966	-27.0096931	0.576628983	0.215793699	0.701405346	12.15505219
F248	COMB3	2.5	1.388229966	5.894676208	0.576628983	0.215793699	-0.01938086	25.61498451
F248	COMB3	3.75	1.388229966	38.79904556	0.576628983	0.215793699	-0.74016708	-2.58163953
F248	COMB3	5	1.388229966	55.19216919	0.576628983	0.215793699	-1.46095335	-63.8554497
F249	D	0	3.339410782	-42.9444809	0.000162396	5.80291E-06	-0.01323585	-41.6320724
F249	D	1.25	3.339410782	-28.5038586	0.000162396	5.80291E-06	-0.01343885	5.187855721
F249	D	2.5	3.339410782	0.068010606	0.000162396	5.80291E-06	-0.01364184	23.18539238
F249	D	3.75	3.339410782	28.63988113	0.000162396	5.80291E-06	-0.01384484	5.017828941
F249	D	5	3.339410782	43.08050156	0.000162396	5.80291E-06	-0.01404783	-41.972126
F249	L	0	1.354235053	-13.0194626	-0.00040261	-0.00058815	0.002375578	-12.9601173
F249	L	1.25	1.354235053	-9.11321259	-0.00040261	-0.00058815	0.002878836	1.686606646
F249	L	2.5	1.354235053	0.105537839	-0.00040261	-0.00058815	0.003382094	7.401038647
F249	L	3.75	1.354235053	9.324288368	-0.00040261	-0.00058815	0.003885353	1.422762036
F249	L	5	1.354235053	13.23053837	-0.00040261	-0.00058815	0.004388611	-13.4878073
F249	EX	0	-10.7709112	17.03818893	0.575537443	0.05685981	1.443801165	42.62070847
F249	EX	1.25	-10.7709112	17.03818893	0.575537443	0.05685981	0.72437942	21.32297134
F249	EX	2.5	-10.7709112	17.03818893	0.575537443	0.05685981	0.004957626	0.025234615
F249	EX	3.75	-10.7709112	17.03818893	0.575537443	0.05685981	-0.71446419	-21.2725029
F249	EX	5	-10.7709112	17.03818893	0.575537443	0.05685981	-1.43388593	-42.5702362
F249	EY	0	0.001148018	7.58884E-07	-3.0521E-05	2.62563E-06	-0.14679275	0.00023374
F249	EY	1.25	0.001148018	7.58884E-07	-3.0521E-05	2.62563E-06	-0.14675459	0.000232791
F249	EY	2.5	0.001148018	7.58884E-07	-3.0521E-05	2.62563E-06	-0.14671645	0.000231842
F249	EY	3.75	0.001148018	7.58884E-07	-3.0521E-05	2.62563E-06	-0.1466783	0.000230894
F249	EY	5	0.001148018	7.58884E-07	-3.0521E-05	2.62563E-06	-0.14664015	0.000229945
F249	COMB1	0	6.174068928	-72.3645172	-0.0004493	-0.00093408	-0.0120821	-70.6946716
F249	COMB1	1.25	6.174068928	-48.7857704	-0.0004493	-0.00093408	-0.01152048	8.923997879
F249	COMB1	2.5	6.174068928	0.250473261	-0.0004493	-0.00093408	-0.01095886	39.66413116
F249	COMB1	3.75	6.174068928	49.28672028	-0.0004493	-0.00093408	-0.01039724	8.297814369
F249	COMB1	5	6.174068928	72.86546326	-0.0004493	-0.00093408	-0.00983562	-71.9470444
F249	COMB2	0	-7.21456623	-31.5583115	0.595715284	0.058671556	1.434945107	-3.683604
F249	COMB2	1.25	-7.21456623	-15.1651888	0.595715284	0.058671556	0.690301001	28.04787827
F249	COMB2	2.5	-7.21456623	17.73918152	0.595715284	0.058671556	-0.05434312	26.70217896
F249	COMB2	3.75	-7.21456623	50.64355087	0.595715284	0.058671556	-0.79898727	-16.3000774
F249	COMB2	5	-7.21456623	67.0366745	0.595715284	0.058671556	-1.54363143	-92.3795166
F249	COMB3	0	0.541333616	-43.8258057	0.18130593	0.017734421	0.28751564	-34.3703423
F249	COMB3	1.25	0.541333616	-27.4326839	0.18130593	0.017734421	0.060883228	12.69550991
F249	COMB3	2.5	0.541333616	5.471685886	0.18130593	0.017734421	-0.16574919	26.68418121
F249	COMB3	3.75	0.541333616	38.37605667	0.18130593	0.017734421	-0.39238161	-0.98370528
F249	COMB3	5	0.541333616	54.76917648	0.18130593	0.017734421	-0.61901402	-61.728775
F250	D	0	5.002696514	-43.3168869	0.043206565	0.00123898	0.115654148	-43.5339394
F250	D	1.25	5.002696514	-28.8762646	0.043206565	0.00123898	0.061645944	3.751495361
F250	D	2.5	5.002696514	-0.30439568	0.043206565	0.00123898	0.00763773	22.21453857
F250	D	3.75	5.002696514	28.26747513	0.043206565	0.00123898	-0.04637048	4.51248455
F250	D	5	5.002696514	42.70809555	0.043206565	0.00123898	-0.10037869	-42.0119629
F250	L	0	1.911921382	-13.4006462	0.002706579	-0.00394861	0.006832826	-14.1458607
F250	L	1.25	1.911921382	-9.49439716	0.002706579	-0.00394861	0.003449603	0.977343798
F250	L	2.5	1.911921382	-0.2756463	0.002706579	-0.00394861	6.63797E-05	7.168256283
F250	L	3.75	1.911921382	8.943104744	0.002706579	-0.00394861	-0.00331684	1.66645956
F250	L	5	1.911921382	12.84935379	0.002706579	-0.00394861	-0.00670007	-12.7676287
F250	EX	0	-7.33852863	16.73275948	0.290098071	0.001072037	0.694851041	42.1028862
F250	EX	1.25	-7.33852863	16.73275948	0.290098071	0.001072037	0.332228422	21.18693733
F250	EX	2.5	-7.33852863	16.73275948	0.290098071	0.001072037	-0.03039418	0.270987391
F250	EX	3.75	-7.33852863	16.73275948	0.290098071	0.001072037	-0.39301679	-20.6449623
F250	EX	5	-7.33852863	16.73275948	0.290098071	0.001072037	-0.75563937	-41.5609131
F250	EY	0	-0.0012171	0.000249098	-0.50503719	-0.20475061	-1.29637063	0.000685871
F250	EY	1.25	-0.0012171	0.000249098	-0.50503719	-0.20475061	-0.66507411	0.000374499
F250	EY	2.5	-0.0012171	0.000249098	-0.50503719	-0.20475061	-0.03377758	6.31265E-05
F250	EY	3.75	-0.0012171	0.000249098	-0.50503719	-0.20475061	0.597518981	-0.00024825
F250	EY	5	-0.0012171	0.000249098	-0.50503719	-0.20475061	1.228815556	-0.00055962

F252	COMB3	3	-8.35031033	-5.43874788	-0.14482693	13.06999397	0.163358271	59.9910965
F253	D	0	7.730375767	-83.2590942	0.116676502	-1.47407079	0.170017838	-105.750381
F253	D	0.75	7.730375767	-76.5484695	0.116676502	-1.47407079	0.082510427	-45.3549347
F253	D	1.5	7.730375767	-62.3565865	0.116676502	-1.47407079	-0.004997	7.202071667
F253	D	2.25	7.730375767	-48.1647072	0.116676502	-1.47407079	-0.09250442	48.18000031
F253	D	3	7.730375767	-41.4540749	0.116676502	-1.47407079	-0.18001184	81.31948853
F253	L	0	2.794794321	-24.9836445	0.046108264	-0.38898945	0.070900321	-32.5062218
F253	L	0.75	2.794794321	-23.5773926	0.046108264	-0.38898945	0.036319103	-14.1200418
F253	L	1.5	2.794794321	-19.3586426	0.046108264	-0.38898945	0.001737885	2.156760931
F253	L	2.25	2.794794321	-15.1398888	0.046108264	-0.38898945	-0.03284333	14.91793442
F253	L	3	2.794794321	-13.7336378	0.046108264	-0.38898945	-0.06742455	25.56973267
F253	EX	0	-0.21541259	-0.20747264	-0.37095433	-4.37513494	-0.44328362	0.016133139
F253	EX	0.75	-0.21541259	-0.20747264	-0.37095433	-4.37513494	-0.1650677	0.171737701
F253	EX	1.5	-0.21541259	-0.20747264	-0.37095433	-4.37513494	0.11314819	0.327342242
F253	EX	2.25	-0.21541259	-0.20747264	-0.37095433	-4.37513494	0.391364068	0.482946843
F253	EX	3	-0.21541259	-0.20747264	-0.37095433	-4.37513494	0.669579983	0.638551354
F253	EY	0	-12.666254	13.40724182	-0.47510695	-0.0008064	-0.90423471	40.18845749
F253	EY	0.75	-12.666254	13.40724182	-0.47510695	-0.0008064	-0.54790431	30.1330204
F253	EY	1.5	-12.666254	13.40724182	-0.47510695	-0.0008064	-0.1915739	20.07758522
F253	EY	2.25	-12.666254	13.40724182	-0.47510695	-0.0008064	0.164756507	10.02214813
F253	EY	3	-12.666254	13.40724182	-0.47510695	-0.0008064	0.521086931	-0.03328858
F253	COMB1	0	13.74812222	-139.88475	0.213785022	-2.39126801	0.317461938	-178.910416
F253	COMB1	0.75	13.74812222	-129.581985	0.213785022	-2.39126801	0.157123074	-77.0179901
F253	COMB1	1.5	13.74812222	-105.801735	0.213785022	-2.39126801	-0.00321578	12.09330368
F253	COMB1	2.25	13.74812222	-82.0214691	0.213785022	-2.39126801	-0.16355464	81.68469238
F253	COMB1	3	13.74812222	-71.7187119	0.213785022	-2.39126801	-0.32389349	138.4949493
F253	COMB2	0	4.784432888	-91.2833557	-0.39656198	-6.19882441	-0.5427801	-108.601295
F253	COMB2	0.75	4.784432888	-83.79422	-0.39656198	-6.19882441	-0.24535847	-42.4008446
F253	COMB2	1.5	4.784432888	-67.5638428	-0.39656198	-6.19882441	0.052063178	14.90479279
F253	COMB2	2.25	4.784432888	-51.3334618	-0.39656198	-6.19882441	0.349484831	58.94497681
F253	COMB2	3	4.784432888	-43.8443298	-0.39656198	-6.19882441	0.646906495	94.09033966
F253	COMB3	0	-4.37016726	-81.2796478	-0.47867849	-3.04931998	-0.88822848	-79.0744019
F253	COMB3	0.75	-4.37016726	-73.7905197	-0.47867849	-3.04931998	-0.52921939	-20.3767262
F253	COMB3	1.5	-4.37016726	-57.5601387	-0.47867849	-3.04931998	-0.17021033	29.4261322
F253	COMB3	2.25	-4.37016726	-41.3297577	-0.47867849	-3.04931998	0.188798726	65.96353149
F253	COMB3	3	-4.37016726	-33.8406258	-0.47867849	-3.04931998	0.547807813	93.60611725
F254	D	0	8.375544548	-81.4820938	0.008900808	0.044572923	-0.00944013	-103.902084
F254	D	0.75	8.375544548	-74.7714615	0.008900808	0.044572923	-0.01611574	-44.8393898
F254	D	1.5	8.375544548	-60.5795822	0.008900808	0.044572923	-0.02279135	6.384860516
F254	D	2.25	8.375544548	-46.3877029	0.008900808	0.044572923	-0.02946696	46.03003693
F254	D	3	8.375544548	-39.6770744	0.008900808	0.044572923	-0.03614257	77.8367691
F254	L	0	2.973959923	-24.4815598	0.015748193	-0.0154031	0.025414905	-32.0965157
F254	L	0.75	2.973959923	-23.0753078	0.015748193	-0.0154031	0.013603753	-14.0868969
F254	L	1.5	2.973959923	-18.8565578	0.015748193	-0.0154031	0.001792602	1.81334281
F254	L	2.25	2.973959923	-14.637804	0.015748193	-0.0154031	-0.01001855	14.19795322
F254	L	3	2.973959923	-13.231554	0.015748193	-0.0154031	-0.0218297	24.47318649
F254	EX	0	-1.09280932	0.296105653	-0.25178328	-4.09215069	-0.30869076	0.780582249
F254	EX	0.75	-1.09280932	0.296105653	-0.25178328	-4.09215069	-0.11985319	0.558502913
F254	EX	1.5	-1.09280932	0.296105653	-0.25178328	-4.09215069	0.068984352	0.336423576
F254	EX	2.25	-1.09280932	0.296105653	-0.25178328	-4.09215069	0.257821888	0.114344239
F254	EX	3	-1.09280932	0.296105653	-0.25178328	-4.09215069	0.446659476	-0.1077351
F254	EY	0	-13.496809	11.90611839	-0.31513777	-0.00088017	-0.60908264	35.68544769
F254	EY	0.75	-13.496809	11.90611839	-0.31513777	-0.00088017	-0.37272918	26.75585556
F254	EY	1.5	-13.496809	11.90611839	-0.31513777	-0.00088017	-0.13637571	17.82626152
F254	EY	2.25	-13.496809	11.90611839	-0.31513777	-0.00088017	0.099977747	8.896[illegible]6748
F254	EY	3	-13.496809	11.90611839	-0.31513777	-0.00088017	0.336331218	-0.03292632
F254	COMB1	0	14.80898952	-136.949005	0.035878077	0.028842542	0.029335691	-176.036926
F254	COMB1	0.75	14.80898952	-126.646248	0.035878077	0.028842542	0.002427116	-76.3463058
F254	COMB1	1.5	14.80898952	-102.86599	0.035878077	0.028842542	-0.02448146	10.56318092
F254	COMB1	2.25	14.80898952	-79.0857315	0.035878077	0.028842542	-0.05139003	77.95276642
F254	COMB1	3	14.80898952	-68.7829742	0.035878077	0.028842542	-0.0782986	132.5612183
F254	COMB2	0	4.348566532	-89.2109909	-0.34555754	-4.19370365	-0.51326239	-107.158768
F254	COMB2	0.75	4.348566532	-81.7218628	-0.34555754	-4.19370365	-0.25409409	-42.5125847
F254	COMB2	1.5	4.348566532	-65.491478	-0.34555754	-4.19370365	0.00507421	13.23877716
F254	COMB2	2.25	4.348566532	-49.2611008	-0.34555754	-4.19370365	0.2642425	55.72468948
F254	COMB2	3	4.348566532	-41.7719727	-0.34555754	-4.19370365	0.523410797	89.31578064
F254	COMB3	0	-4.78476524	-80.6731949	-0.39589986	-1.24800205	-0.73868084	-81.4919815
F254	COMB3	0.75	-4.78476524	-73.1840591	-0.39589986	-1.24800205	-0.44175574	-23.249155
F254	COMB3	1.5	-4.78476524	-56.9536781	-0.39589986	-1.24800205	-0.14483067	26.09885406
F254	COMB3	2.25	-4.78476524	-40.7232971	-0.39589986	-1.24800205	0.152094379	62.18141174
F254	COMB3	3	-4.78476524	-33.2341728	-0.39589986	-1.24800205	0.449019462	89.36914825
F255	D	0	8.376695633	-81.4491806	-0.01251	-0.09852958	0.001761125	-103.853165
F255	D	0.75	8.376695633	-74.7385483	-0.01251	-0.09852958	0.011143627	-44.8151512
F255	D	1.5	8.376695633	-60.5466766	-0.01251	-0.09852958	0.020526128	6.38441515
F255	D	2.25	8.376695633	-46.3547935	-0.01251	-0.09852958	0.029908631	46.0049057
F255	D	3	8.376695633	-39.644165	-0.01251	-0.09852958	0.039291132	77.78695679
F255	L	0	3.03472209	-24.5775471	-0.01673456	0.074261613	-0.02929831	-32.225975
F255	L	0.75	3.03472209	-23.1712971	-0.01673456	0.074261613	-0.01674739	-14.1443672
F255	L	1.5	3.03472209	-18.9525452	-0.01673456	0.074261613	-0.00419646	1.827863097
F255	L	2.25	3.03472209	-14.7337923	-0.01673456	0.074261613	0.008354468	14.28446484
F255	L	3	3.03472209	-13.3275414	-0.01673456	0.074261613	0.020905396	24.63168907
F255	EX	0	1.041799307	-0.3036831	-0.10785689	-4.07826424	-0.10613836	-0.79716456
F255	EX	0.75	1.041799307	-0.3036831	-0.10785689	-4.07826424	-0.02524564	-0.56940216
F255	EX	1.5	1.041799307	-0.3036831	-0.10785689	-4.07826424	0.055647071	-0.34163973

F255	EX	2.25	1.041799307	-0.3036831	-0.10785689	-4.07826424	0.136539787	-0.11387728
F255	EX	3	1.041799307	-0.3036831	-0.10785689	-4.07826424	0.217432499	0.113885164
F255	EY	0	-13.4972734	11.90610313	0.315159202	0.0008795	0.609123468	35.68540192
F255	EY	0.75	-13.4972734	11.90610313	0.315159202	0.0008795	0.372753888	26.75581741
F255	EY	1.5	-13.4972734	11.90610313	0.315159202	0.0008795	0.136384383	17.82623482
F255	EY	2.25	-13.4972734	11.90610313	0.315159202	0.0008795	-0.09998516	8.896652222
F255	EY	3	-13.4972734	11.90610313	0.315159202	0.0008795	-0.3363547	-0.03293096
F255	COMB1	0	14.90758991	-137.063095	-0.04178729	0.000583088	-0.04476395	-176.185349
F255	COMB1	0.75	14.90758991	-126.760338	-0.04178729	0.000583088	-0.01342347	-76.4091644
F255	COMB1	1.5	14.90758991	-102.98008	-0.04178729	0.000583088	0.017917018	10.58587933
F255	COMB1	2.25	14.90758991	-79.1998215	-0.04178729	0.000583088	0.049257506	78.06103516
F255	COMB1	3	14.90758991	-68.8970642	-0.04178729	0.000583088	0.080597989	132.7550507
F255	COMB2	0	6.57808876	-89.8274612	-0.03076361	-4.30078983	0.0746409	-108.781166
F255	COMB2	0.75	6.57808876	-82.3383255	-0.03076361	-4.30078983	0.097713619	-43.6726303
F255	COMB2	1.5	6.57808876	-66.1079483	-0.03076361	-4.30078983	0.120786346	12.54107952
F255	COMB2	2.25	6.57808876	-49.8775673	-0.03076361	-4.30078983	0.143859074	55.48934174
F255	COMB2	3	6.57808876	-42.3884392	-0.03076361	-4.30078983	0.166931778	89.54278564
F255	COMB3	0	-4.09250259	-80.8578186	0.278535366	-1.36379337	0.598766267	-81.9784393
F255	COMB3	0.75	-4.09250259	-73.3686905	0.278535366	-1.36379337	0.389864594	-23.5971355
F255	COMB3	1.5	-4.09250259	-57.1383133	0.278535366	-1.36379337	0.18096298	25.88934135
F255	COMB3	2.25	-4.09250259	-40.9079285	0.278535366	-1.36379337	-0.02793866	62.11037064
F255	COMB3	3	-4.09250259	-33.4188004	0.278535366	-1.36379337	-0.23684032	89.43658447
F256	D	0	7.807701111	-83.3867111	-0.11733995	1.597012997	-0.17317659	-105.943977
F256	D	0.75	7.807701111	-76.6760788	-0.11733995	1.597012997	-0.08517157	-45.4528122
F256	D	1.5	7.807701111	-62.4841995	-0.11733995	1.597012997	0.002833447	7.199897766
F256	D	2.25	7.807701111	-48.2923203	-0.11733995	1.597012997	0.090838462	48.27353668
F256	D	3	7.807701111	-41.5816917	-0.11733995	1.597012997	0.178843483	81.50873566
F256	L	0	3.721077681	-35.0682983	-0.04656997	0.530034959	-0.07404959	-43.2065773
F256	L	0.75	3.721077681	-32.3964195	-0.04656997	0.530034959	-0.0391221	-17.5733128
F256	L	1.5	3.721077681	-24.3807888	-0.04656997	0.530034959	-0.0041946	4.052137852
F256	L	2.25	3.721077681	-16.3651619	-0.04656997	0.530034959	0.030732898	18.99789238
F256	L	3	3.721077681	-13.693284	-0.04656997	0.530034959	0.065660395	29.93583107
F256	EX	0	0.102380715	0.195255965	0.125312299	-4.33028793	0.298951298	-0.03337962
F256	EX	0.75	0.102380715	0.195255965	0.125312299	-4.33028793	0.204967022	-0.17982167
F256	EX	1.5	0.102380715	0.195255965	0.125312299	-4.33028793	0.110982746	-0.32626373
F256	EX	2.25	0.102380715	0.195255965	0.125312299	-4.33028793	0.016998475	-0.47270572
F256	EX	3	0.102380715	0.195255965	0.125312299	-4.33028793	-0.0769858	-0.61914784
F256	EY	0	-12.6662788	13.40725136	0.475091875	0.000806115	0.904204786	40.18848801
F256	EY	0.75	-12.6662788	13.40725136	0.475091875	0.000806115	0.547885716	30.13304329
F256	EY	1.5	-12.6662788	13.40725136	0.475091875	0.000806115	0.191566631	20.07759857
F256	EY	2.25	-12.6662788	13.40725136	0.475091875	0.000806115	-0.16475245	10.02215481
F256	EY	3	-12.6662788	13.40725136	0.475091875	0.000806115	-0.52107155	-0.03328947
F256	COMB1	0	15.32296562	-156.173325	-0.2153199	2.764471531	-0.32629126	-196.26329
F256	COMB1	0.75	15.32296562	-143.845566	-0.2153199	2.764471531	-0.16480124	-82.660675
F256	COMB1	1.5	15.32296562	-113.990303	-0.2153199	2.764471531	-0.00331122	15.12329769
F256	COMB1	2.25	15.32296562	-84.1350403	-0.2153199	2.764471531	0.158178791	88.32487488
F256	COMB1	3	15.32296562	-71.8072891	-0.2153199	2.764471531	0.3196688	145.7078094
F256	COMB2	0	5.486311913	-94.1771851	0.141475677	-2.63776946	0.389078051	-112.226418
F256	COMB2	0.75	5.486311913	-86.2893829	0.141475677	-2.63776946	0.282971263	-43.9552536
F256	COMB2	1.5	5.486311913	-68.8629837	0.141475677	-2.63776946	0.17686446	14.8230772
F256	COMB2	2.25	5.486311913	-51.4365883	0.141475677	-2.63776946	0.07075765	59.33927917
F256	COMB2	3	5.486311913	-43.54879	0.141475677	-2.63776946	-0.03534916	94.36265564
F256	COMB3	0	-3.8971169	-84.4634399	0.400443345	0.480630398	0.83842361	-82.6638489
F256	COMB3	0.75	-3.8971169	-76.5756378	0.400443345	0.480630398	0.538091004	-21.6779957
F256	COMB3	1.5	-3.8971169	-59.1492386	0.400443345	0.480630398	0.237758353	29.81502151
F256	COMB3	2.25	-3.8971169	-41.7228432	0.400443345	0.480630398	-0.0625743	67.0459137
F256	COMB3	3	-3.8971169	-33.835041	0.400443345	0.480630398	-0.36290696	94.78397369
F257	D	0	5.850858212	-89.5903168	-0.18736745	-12.0184631	-0.25548774	-100.372116
F257	D	0.75	5.850858212	-75.3796921	-0.18736745	-12.0184631	-0.11496208	-38.0407486
F257	D	1.5	5.850858212	-53.6878052	-0.18736745	-12.0184631	0.025563592	10.82716846
F257	D	2.25	5.850858212	-31.9959202	-0.18736745	-12.0184631	0.166089252	42.49100494
F257	D	3	5.850858212	-17.7852879	-0.18736745	-12.0184631	0.306614935	60.69138718
F257	L	0	2.843882799	-27.359148	-0.08164491	-4.26850557	-0.12656058	-31.6613426
F257	L	0.75	2.843882799	-24.6872711	-0.08164491	-4.26850557	-0.06532687	-11.8099413
F257	L	1.5	2.843882799	-16.6716423	-0.08164491	-4.26850557	-0.00409316	4.033644199
F257	L	2.25	2.843882799	-8.65601254	-0.08164491	-4.26850557	0.057140559	13.19753456
F257	L	3	2.843882799	-5.9841361	-0.08164491	-4.26850557	0.118374273	18.35360909
F257	EX	0	0.661279857	-1.42167199	0.319959313	-3.51162529	0.646198452	-2.50338602
F257	EX	0.75	0.661279857	-1.42167199	0.319959313	-3.51162529	0.40622884	-1.4371314
F257	EX	1.5	0.661279857	-1.42167199	0.319959313	-3.51162529	0.166259259	-0.37087685
F257	EX	2.25	0.661279857	-1.42167199	0.319959313	-3.51162529	-0.07371034	0.695377767
F257	EX	3	0.661279857	-1.42167199	0.319959313	-3.51162529	-0.31367996	1.761632323
F257	EY	0	-12.7253132	14.04018784	0.170027465	0.000133331	0.322500169	42.08862305
F257	EY	0.75	-12.7253132	14.04018784	0.170027465	0.000133331	0.194979504	31.5584774
F257	EY	1.5	-12.7253132	14.04018784	0.170027465	0.000133331	0.067458831	21.02832985
F257	EY	2.25	-12.7253132	14.04018784	0.170027465	0.000133331	-0.06006184	10.4981842
F257	EY	3	-12.7253132	14.04018784	0.170027465	0.000133331	-0.18758251	-0.03196272
F257	COMB1	0	11.57124233	-151.28302	-0.3554728	-21.2517643	-0.50908226	-171.104691
F257	COMB1	0.75	11.57124233	-129.955261	-0.3554728	-21.2517643	-0.24247749	-64.5448074
F257	COMB1	1.5	11.57124233	-91.0999985	-0.3554728	-21.2517643	0.02412726	19.44643211
F257	COMB1	2.25	11.57124233	-52.2447243	-0.3554728	-21.2517643	0.290731996	72.10526276
F257	COMB1	3	11.57124233	-30.9169636	-0.3554728	-21.2517643	0.557336748	102.1954422
F257	COMB2	0	3.715175152	-99.7367401	0.162262559	-17.5984554	0.462274253	-104.697128
F257	COMB2	0.75	3.715175152	-83.973938	0.162262559	-17.5984554	0.340577245	-35.2094269

F257	COMB2	1.5	3.715175152	-58.6725349	0.162262559	-17.5984554	0.218880296	18.87919044
F257	COMB2	2.25	3.715175152	-33.3711319	0.162262559	-17.5984554	0.097183302	52.79942322
F257	COMB2	3	3.715175152	-17.608326	0.162262559	-17.5984554	-0.02451367	71.32056427
F257	COMB3	0	-6.11405182	-88.3935928	0.056862045	-15.0699873	0.234048977	-71.9595566
F257	COMB3	0.75	-6.11405182	-72.6307983	0.056862045	-15.0699873	0.19140242	-10.9792118
F257	COMB3	1.5	-6.11405182	-47.3293953	0.056862045	-15.0699873	0.148755863	34.60204315
F257	COMB3	2.25	-6.11405182	-22.0279903	0.056862045	-15.0699873	0.106109299	60.01491547
F257	COMB3	3	-6.11405182	-6.26518536	0.056862045	-15.0699873	0.063462757	70.02869415
F258	D	0	0.375996143	-35.6298103	-0.0117664	0.00153887	-0.02883216	-24.4695854
F258	D	1.25	0.375996143	-22.9891834	-0.0117664	0.00153887	-0.01412416	14.33199978
F258	D	2.5	0.375996143	3.782684326	-0.0117664	0.00153887	0.000583833	26.56119347
F258	D	3.75	0.375996143	30.55455399	-0.0117664	0.00153887	0.015291829	4.875288486
F258	D	5	0.375996143	43.19517517	-0.0117664	0.00153887	0.029999822	-43.3830109
F258	L	0	0.155852258	-11.9702091	-0.00189295	0.000342786	-0.00479517	-8.6296587
F258	L	1.25	0.155852258	-8.06395912	-0.00189295	0.000342786	-0.00242899	4.705498695
F258	L	2.5	0.155852258	1.154791713	-0.00189295	0.000342786	-6.2808E-05	9.108363152
F258	L	3.75	0.155852258	10.37354183	-0.00189295	0.000342786	0.002303374	1.818518877
F258	L	5	0.155852258	14.27979183	-0.00189295	0.000342786	0.004669555	-14.4036179
F258	EX	0	-1.08684516	2.382769823	0.082534999	-0.00056957	0.208227515	6.977562904
F258	EX	1.25	-1.08684516	2.382769823	0.082534999	-0.00056957	0.105058782	3.999100924
F258	EX	2.5	-1.08684516	2.382769823	0.082534999	-0.00056957	0.001890036	1.020638824
F258	EX	3.75	-1.08684516	2.382769823	0.082534999	-0.00056957	-0.10127871	-1.9578234
F258	EX	5	-1.08684516	2.382769823	0.082534999	-0.00056957	-0.20444745	-4.9362855
F258	EY	0	0.000930695	-0.00017847	0.14913784	-0.01294414	0.375989556	-0.0001853
F258	EY	1.25	0.000930695	-0.00017847	0.14913784	-0.01294414	0.189567238	3.77847E-05
F258	EY	2.5	0.000930695	-0.00017847	0.14913784	-0.01294414	0.003144946	0.000260869
F258	EY	3.75	0.000930695	-0.00017847	0.14913784	-0.01294414	-0.18327735	0.000483953
F258	EY	5	0.000930695	-0.00017847	0.14913784	-0.01294414	-0.36969966	0.000707038
F258	COMB1	0	0.70055902	-61.9081039	-0.01714839	0.002395102	-0.04227087	-43.1709557
F258	COMB1	1.25	0.70055902	-40.489357	-0.01714839	0.002395102	-0.02083538	24.72719765
F258	COMB1	2.5	0.70055902	6.386888027	-0.01714839	0.002395102	0.000600106	46.44681168
F258	COMB1	3.75	0.70055902	53.263134	-0.01714839	0.002395102	0.022035591	8.759976387
F258	COMB1	5	0.70055902	74.68187714	-0.01714839	0.002395102	0.043471076	-75.1054001
F258	COMB2	0	-0.68070209	-38.7158051	0.119451143	-0.00294311	0.302167952	-21.1896877
F258	COMB2	1.25	-0.68070209	-24.2126808	0.119451143	-0.00294311	0.15285401	20.66991425
F258	COMB2	2.5	-0.68070209	6.801688194	0.119451143	-0.00294311	0.003540085	31.81483078
F258	COMB2	3.75	-0.68070209	37.81605911	0.119451143	-0.00294311	-0.14577384	3.665691853
F258	COMB2	5	-0.68070209	52.31917953	0.119451143	-0.00294311	-0.29508778	-55.1981316
F258	COMB3	0	0.102510445	-40.43153	0.169642255	-0.01204697	0.428596437	-26.2136707
F258	COMB3	1.25	0.102510445	-25.9284058	0.169642255	-0.01204697	0.216543615	17.79058838
F258	COMB3	2.5	0.102510445	5.085963249	0.169642255	-0.01204697	0.004490795	31.08016205
F258	COMB3	3.75	0.102510445	36.10033417	0.169642255	-0.01204697	-0.20756203	5.075680256
F258	COMB3	5	0.102510445	50.60345459	0.169642255	-0.01204697	-0.41961485	-51.643486
F259	D	0	0.566218674	-39.7324142	-0.01123149	-0.03550648	-0.02846429	-40.3424683
F259	D	1.25	0.566218674	-27.0917912	-0.01123149	-0.03550648	-0.01442493	3.587373257
F259	D	2.5	0.566218674	-0.31992272	-0.01123149	-0.03550648	-0.00038557	20.94482613
F259	D	3.75	0.566218674	26.45194817	-0.01123149	-0.03550648	0.013653794	4.387179852
F259	D	5	0.566218674	39.09257126	-0.01123149	-0.03550648	0.027693154	-38.7428551
F259	L	0	0.237857819	-13.2114763	-0.00245838	-0.01328626	-0.00610813	-13.5968122
F259	L	1.25	0.237857819	-9.30522633	-0.00245838	-0.01328626	-0.00303516	1.289929032
F259	L	2.5	0.237857819	-0.08647591	-0.00245838	-0.01328626	3.7813E-05	7.244378567
F259	L	3.75	0.237857819	9.132273674	-0.00245838	-0.01328626	0.003110784	1.506118774
F259	L	5	0.237857819	13.03852463	-0.00245838	-0.01328626	0.006183755	-13.1644325
F259	EX	0	-1.56751812	1.530767918	0.074852005	0.000948432	0.18850176	3.694091082
F259	EX	1.25	-1.56751812	1.530767918	0.074852005	0.000948432	0.094936751	1.780631065
F259	EX	2.5	-1.56751812	1.530767918	0.074852005	0.000948432	0.001371741	-0.13282877
F259	EX	3.75	-1.56751812	1.530767918	0.074852005	0.000948432	-0.09219327	-2.04628873
F259	EX	5	-1.56751812	1.530767918	0.074852005	0.000948432	-0.18575828	-3.95974874
F259	EY	0	0.001026931	0.000812021	0.27003631	-0.03005332	0.672510207	0.002065497
F259	EY	1.25	0.001026931	0.000812021	0.27003631	-0.03005332	0.334964842	0.00105047
F259	EY	2.5	0.001026931	0.000812021	0.27003631	-0.03005332	-0.00258056	3.54437E-05
F259	EY	3.75	0.001026931	0.000812021	0.27003631	-0.03005332	-0.34012595	-0.00097958
F259	EY	5	0.001026931	0.000812021	0.27003631	-0.03005332	-0.67767131	-0.00199461
F259	COMB1	0	1.060034871	-68.8172607	-0.01741119	-0.06386579	-0.04393015	-70.165863
F259	COMB1	1.25	1.060034871	-47.3985138	-0.01741119	-0.06386579	-0.02216616	6.36873436
F259	COMB1	2.5	1.060034871	-0.52226871	-0.01741119	-0.06386579	-0.00040218	36.7247963
F259	COMB1	3.75	1.060034871	46.35397339	-0.01741119	-0.06386579	0.021361807	7.674406052
F259	COMB1	5	1.060034871	67.77272034	-0.01741119	-0.06386579	0.043125793	-67.5545197
F259	COMB2	0	-0.95260292	-44.296051	0.149965808	-0.04995215	0.375128478	-42.8185539
F259	COMB2	1.25	-0.95260292	-29.7929268	0.149965808	-0.04995215	0.187671214	6.016353607
F259	COMB2	2.5	-0.95260292	1.221441746	0.149965808	-0.04995215	0.000213941	24.13658142
F259	COMB2	3.75	-0.95260292	32.23581314	0.149965808	-0.04995215	-0.18724333	2.962749004
F259	COMB2	5	-0.95260292	46.73893356	0.149965808	-0.04995215	-0.37470058	-48.9257622
F259	COMB3	0	0.176764905	-45.3976059	0.294549048	-0.07272421	0.733702242	-45.4767799
F259	COMB3	1.25	0.176764905	-30.8944836	0.294549048	-0.07272421	0.365515888	4.735071182
F259	COMB3	2.5	0.176764905	0.119885735	0.294549048	-0.07272421	-0.00267043	24.23224258
F259	COMB3	3.75	0.176764905	31.13425636	0.294549048	-0.07272421	-0.37085676	4.435357094
F259	COMB3	5	0.176764905	45.63737869	0.294549048	-0.07272421	-0.73904306	-46.07621
F260	D	0	0.58432889	-39.4116592	0.000572926	-1.7252E-05	0.00437333	-38.8754921
F260	D	1.25	0.58432889	-26.77104	0.000572926	-1.7252E-05	0.003657172	4.653413296
F260	D	2.5	0.58432889	0.000828999	0.000572926	-1.7252E-05	0.002941014	21.60992622
F260	D	3.75	0.58432889	26.77269936	0.000572926	-1.7252E-05	0.002224856	4.651340485
F260	D	5	0.58432889	39.41331863	0.000572926	-1.7252E-05	0.001508698	-38.8796349
F260	L	0	0.263718903	-13.0825281	0.000345139	0.00043267	0.001033377	-13.1497478

F260	L	1.25	0.263718903	-9.17627811	0.000345139	0.00043267	0.000601952	1.575808525
F260	L	2.5	0.263718903	0.042472154	0.000345139	0.00043267	0.000170528	7.369072914
F260	L	3.75	0.263718903	9.261222839	0.000345139	0.00043267	-0.0002609	1.469628215
F260	L	5	0.263718903	13.16747189	0.000345139	0.00043267	-0.00069232	-13.3621092
F260	EX	0	-1.56189442	1.648327112	0.193249658	-0.01061907	0.482510775	4.123312473
F260	EX	1.25	-1.56189442	1.648327112	0.193249658	-0.01061907	0.240948722	2.062903643
F260	EX	2.5	-1.56189442	1.648327112	0.193249658	-0.01061907	-0.00061334	0.00249467
F260	EX	3.75	-1.56189442	1.648327112	0.193249658	-0.01061907	-0.24217539	-2.05791426
F260	EX	5	-1.56189442	1.648327112	0.193249658	-0.01061907	-0.48373747	-4.11832333
F260	EY	0	0.001070556	2.95032E-07	-1.3454E-05	-2.7474E-07	-0.00497808	-0.00041545
F260	EY	1.25	0.001070556	2.95032E-07	-1.3454E-05	-2.7474E-07	-0.00496126	-0.00041582
F260	EY	2.5	0.001070556	2.95032E-07	-1.3454E-05	-2.7474E-07	-0.00494444	-0.00041619
F260	EY	3.75	0.001070556	2.95032E-07	-1.3454E-05	-2.7474E-07	-0.00492762	-0.00041655
F260	EY	5	0.001070556	2.95032E-07	-1.3454E-05	-2.7474E-07	-0.00491081	-0.00041692
F260	COMB1	0	1.123144865	-68.2260361	0.001239735	0.00067157	0.006901399	-67.6901855
F260	COMB1	1.25	1.123144865	-46.8072929	0.001239735	0.00067157	0.00535173	8.105389595
F260	COMB1	2.5	1.123144865	0.068950243	0.001239735	0.00067157	0.003802062	37.72242737
F260	COMB1	3.75	1.123144865	46.94519424	0.001239735	0.00067157	0.002252393	7.933013439
F260	COMB1	5	1.123144865	68.36393738	0.001239735	0.00067157	0.000702724	-68.034935
F260	COMB2	0	-0.91960669	-43.7972221	0.200719446	-0.01087265	0.502748072	-40.6939392
F260	COMB2	1.25	-0.91960669	-29.2941017	0.200719446	-0.01087265	0.251848787	7.517437458
F260	COMB2	2.5	-0.91960669	1.720267892	0.200719446	-0.01087265	0.000949478	25.01413155
F260	COMB2	3.75	-0.91960669	32.73463821	0.200719446	-0.01087265	-0.24994981	3.216767788
F260	COMB2	5	-0.91960669	47.23775864	0.200719446	-0.01087265	-0.50084913	-49.2952766
F260	COMB3	0	0.205744132	-44.9840164	0.061569806	-0.00322712	0.151681423	-43.6630287
F260	COMB3	1.25	0.205744132	-30.480896	0.061569806	-0.00322712	0.074719176	6.031841278
F260	COMB3	2.5	0.205744132	0.533472538	0.061569806	-0.00322712	-0.00224308	25.01202965
F260	COMB3	3.75	0.205744132	31.54784203	0.061569806	-0.00322712	-0.07920533	4.698159695
F260	COMB3	5	0.205744132	46.05096436	0.061569806	-0.00322712	-0.1561676	-46.3303909
F261	D	0	0.56329	-39.0239182	0.011843006	0.035475418	0.029203285	-38.640522
F261	D	1.25	0.56329	-26.383297	0.011843006	0.035475418	0.014399526	4.403700829
F261	D	2.5	0.56329	0.388574213	0.011843006	0.035475418	-0.00040423	20.87553215
F261	D	3.75	0.56329	27.16044426	0.011843006	0.035475418	-0.01520799	3.432265282
F261	D	5	0.56329	39.80106735	0.011843006	0.035475418	-0.03001175	-40.5833931
F261	L	0	0.237949714	-13.1589575	0.002475712	0.012725485	0.006215244	-13.4967966
F261	L	1.25	0.237949714	-9.25270653	0.002475712	0.012725485	0.003120603	1.324296117
F261	L	2.5	0.237949714	-0.03395646	0.002475712	0.012725485	2.59618E-05	7.213096142
F261	L	3.75	0.237949714	9.184793472	0.002475712	0.012725485	-0.00306868	1.409187317
F261	L	5	0.237949714	13.09104347	0.002475712	0.012725485	-0.00616332	-13.327014
F261	EX	0	-1.25533843	1.52208674	0.075359918	0.001010872	0.187153906	3.939932823
F261	EX	1.25	-1.25533843	1.52208674	0.075359918	0.001010872	0.092954002	2.037324429
F261	EX	2.5	-1.25533843	1.52208674	0.075359918	0.001010872	-0.0012459	0.134716004
F261	EX	3.75	-1.25533843	1.52208674	0.075359918	0.001010872	-0.0954458	-1.76789236
F261	EX	5	-1.25533843	1.52208674	0.075359918	0.001010872	-0.18964571	-3.67050099
F261	EY	0	0.001027935	-0.00081221	-0.27002782	0.0300538	-0.67764986	-0.00199521
F261	EY	1.25	0.001027935	-0.00081221	-0.27002782	0.0300538	-0.34011504	-0.00097994
F261	EY	2.5	0.001027935	-0.00081221	-0.27002782	0.0300538	-0.00258029	3.53307E-05
F261	EY	3.75	0.001027935	-0.00081221	-0.27002782	0.0300538	0.3349545	0.001050599
F261	EY	5	0.001027935	-0.00081221	-0.27002782	0.0300538	0.672489226	0.002065868
F261	COMB1	0	1.056667566	-67.8830338	0.018172748	0.062931277	0.04498833	-67.963501
F261	COMB1	1.25	1.056667566	-46.4642868	0.018172748	0.062931277	0.022272395	7.40331459
F261	COMB1	2.5	1.056667566	0.411958724	0.018172748	0.062931277	-0.00044354	36.59159088
F261	COMB1	3.75	1.056667566	47.28820419	0.018172748	0.062931277	-0.02315948	6.373418331
F261	COMB1	5	1.056667566	68.70694733	0.018172748	0.062931277	-0.04587542	-70.0232925
F261	COMB2	0	-0.63254279	-43.5450821	0.006153767	0.051770918	0.01286584	-40.7468376
F261	COMB2	1.25	-0.63254279	-29.0419598	0.006153767	0.051770918	0.005173646	7.149361134
F261	COMB2	2.5	-0.63254279	1.97241056	0.006153767	0.051770918	-0.00251857	24.3308754
F261	COMB2	3.75	-0.63254279	32.98678207	0.006153767	0.051770918	-0.01021077	2.218334913
F261	COMB2	5	-0.63254279	47.4899025	0.006153767	0.051770918	-0.01790299	-50.6088905
F261	COMB3	0	0.272056401	-44.6415825	-0.24657582	0.073132634	-0.61995763	-43.5850563
F261	COMB3	1.25	0.272056401	-30.1384602	-0.24657582	0.073132634	-0.31173781	5.681767464
F261	COMB3	2.5	0.272056401	0.875911117	-0.24657582	0.073132634	-0.00351803	24.23390579
F261	COMB3	3.75	0.272056401	31.89028168	-0.24657582	0.073132634	0.304701746	3.491989613
F261	COMB3	5	0.272056401	46.3934021	-0.24657582	0.073132634	0.612921476	-47.9646111
F262	D	0	0.373361528	-43.3763733	0.011698096	-0.00174812	0.029815262	-43.8717995
F262	D	1.25	0.373361528	-30.7357521	0.011698096	-0.00174812	0.015192642	4.61299324
F262	D	2.5	0.373361528	-3.96388102	0.011698096	-0.00174812	0.000570023	26.52539444
F262	D	3.75	0.373361528	22.80798912	0.011698096	-0.00174812	-0.0140526	14.5226965
F262	D	5	0.373361528	35.4486084	0.011698096	-0.00174812	-0.02867522	-24.052393
F262	L	0	0.156372532	-14.2992134	0.002223067	-0.00048135	0.005486311	-14.41751
F262	L	1.25	0.156372532	-10.3929644	0.002223067	-0.00048135	0.002707478	1.828903675
F262	L	2.5	0.156372532	-1.17421353	0.002223067	-0.00048135	-7.1356E-05	9.143025398
F262	L	3.75	0.156372532	8.044536591	0.002223067	-0.00048135	-0.00285019	4.764437675
F262	L	5	0.156372532	11.95078754	0.002223067	-0.00048135	-0.00562902	-8.54644203
F262	EX	0	-0.74071562	2.348998308	0.081880704	-0.00048145	0.203410923	4.874163628
F262	EX	1.25	-0.74071562	2.348998308	0.081880704	-0.00048145	0.101060048	1.93791604
F262	EX	2.5	-0.74071562	2.348998308	0.081880704	-0.00048145	-0.00129083	-0.9983319
F262	EX	3.75	-0.74071562	2.348998308	0.081880704	-0.00048145	-0.1036417	-3.93457985
F262	EX	5	-0.74071562	2.348998308	0.081880704	-0.00048145	-0.20599258	-6.87082767
F262	EY	0	0.000930674	0.000178648	-0.14913422	0.012944098	-0.3696906	0.000707502
F262	EY	1.25	0.000930674	0.000178648	-0.14913422	0.012944098	-0.18327282	0.000484191
F262	EY	2.5	0.000930674	0.000178648	-0.14913422	0.012944098	0.003144957	0.000260881
F262	EY	3.75	0.000930674	0.000178648	-0.14913422	0.012944098	0.189562738	3.75702E-05
F262	EY	5	0.000930674	0.000178648	-0.14913422	0.012944098	0.375980526	-0.00018574

F262	COMB1	0	0.698229849	-74.9303894	0.017594622	-0.00286791	0.044556413	-75.7141724
F262	COMB1	1.25	0.698229849	-53.5116463	0.017594622	-0.00286791	0.022563135	8.461837769
F262	COMB1	2.5	0.698229849	-6.63539886	0.017594622	-0.00286791	0.000569858	46.45931244
F262	COMB1	3.75	0.698229849	40.24084473	0.017594622	-0.00286791	-0.02142342	25.05033684
F262	COMB1	5	0.698229849	61.65959167	0.017594622	-0.00286791	-0.04341669	-42.537178
F262	COMB2	0	-0.32506055	-47.6181755	0.050752513	0.00159194	0.127111986	-45.5619202
F262	COMB2	1.25	-0.32506055	-33.1150551	0.050752513	0.00159194	0.063671336	7.425642967
F262	COMB2	2.5	-0.32506055	-2.10068297	0.050752513	0.00159194	0.000230699	29.69852638
F262	COMB2	3.75	-0.32506055	28.91368675	0.050752513	0.00159194	-0.06320994	12.677351
F262	COMB2	5	-0.32506055	43.41680908	0.050752513	0.00159194	-0.12665057	-35.058506
F262	COMB3	0	0.208938733	-49.3093224	-0.11781524	0.011452493	-0.29106647	-49.070797
F262	COMB3	1.25	0.208938733	-34.8062019	-0.11781524	0.011452493	-0.14379743	6.030699253
F262	COMB3	2.5	0.208938733	-3.7918303	-0.11781524	0.011452493	0.00347164	30.41751671
F262	COMB3	3.75	0.208938733	27.2225399	-0.11781524	0.011452493	0.150740698	15.51027584
F262	COMB3	5	0.208938733	41.72566223	-0.11781524	0.011452493	0.298009783	-30.1116467
F263	D	0	4.496155262	17.76994133	-0.18750004	-12.2437992	-0.28187287	54.26325226
F263	D	0.75	4.496155262	30.11025047	-0.18750004	-12.2437992	-0.1412479	36.54197311
F263	D	1.5	4.496155262	46.191185	-0.18750004	-12.2437992	-0.00062291	8.162733078
F263	D	2.25	4.496155262	62.27211761	-0.18750004	-12.2437992	0.140002072	-32.7447815
F263	D	3	4.496155262	74.61242676	-0.18750004	-12.2437992	0.280627042	-84.310257
F263	L	0	1.376599431	5.993172646	-0.0752159	-4.32079458	-0.11478782	11.45866394
F263	L	0.75	1.376599431	6.696297646	-0.0752159	-4.32079458	-0.05837591	6.788005352
F263	L	1.5	1.376599431	8.805671692	-0.0752159	-4.32079458	-0.001964	1.062659025
F263	L	2.25	1.376599431	10.91504574	-0.0752159	-4.32079458	0.054447901	-6.42049837
F263	L	3	1.376599431	11.61817074	-0.0752159	-4.32079458	0.110859804	-14.9583416
F263	EX	0	-0.4135485	-0.93930823	0.484891146	3.408566236	0.840346932	-1.78660381
F263	EX	0.75	-0.4135485	-0.93930823	0.484891146	3.408566236	0.476678669	-1.08212292
F263	EX	1.5	-0.4135485	-0.93930823	0.484891146	3.408566236	0.113010414	-0.37764189
F263	EX	2.25	-0.4135485	-0.93930823	0.484891146	3.408566236	-0.25065783	0.326839089
F263	EX	3	-0.4135485	-0.93930823	0.484891146	3.408566236	-0.61432606	1.031319976
F263	EY	0	-12.5761824	14.04035854	-0.17096196	-0.00031917	-0.18840267	-0.01901873
F263	EY	0.75	-12.5761824	14.04035854	-0.17096196	-0.00031917	-0.06018124	-10.549284
F263	EY	1.5	-12.5761824	14.04035854	-0.17096196	-0.00031917	0.068040192	-21.0795498
F263	EY	2.25	-12.5761824	14.04035854	-0.17096196	-0.00031917	0.196261629	-31.6098156
F263	EY	3	-12.5761824	14.04035854	-0.17096196	-0.00031917	0.324483067	-42.1400795
F263	COMB1	0	7.597945213	30.91300583	-0.34534547	-21.6058311	-0.52190793	83.44976807
F263	COMB1	0.75	7.597945213	46.84637451	-0.34534547	-21.6058311	-0.26289892	54.71117401
F263	COMB1	1.5	7.597945213	69.51849365	-0.34534547	-21.6058311	-0.0038899	11.49553394
F263	COMB1	2.25	7.597945213	92.19061279	-0.34534547	-21.6058311	0.255119115	-49.5665359
F263	COMB1	3	7.597945213	108.1239777	-0.34534547	-21.6058311	0.514128149	-125.105652
F263	COMB2	0	0.765071511	23.99681664	0.227441281	-10.6892738	0.478287578	58.7307663
F263	COMB2	0.75	0.765071511	37.17562485	0.227441281	-10.6892738	0.307706624	36.06427002
F263	COMB2	1.5	0.765071511	54.72505951	0.227441281	-10.6892738	0.137125731	1.874689937
F263	COMB2	2.25	0.765071511	72.27449036	0.227441281	-10.6892738	-0.03345517	-46.0232887
F263	COMB2	3	0.765071511	85.45330048	0.227441281	-10.6892738	-0.20403609	-105.444351
F263	COMB3	0	-8.18066788	34.99278259	-0.2473374	-13.1436768	-0.2652382	60.00314331
F263	COMB3	0.75	-8.18066788	48.1715889	-0.2473374	-13.1436768	-0.07973523	29.089674
F263	COMB3	1.5	-8.18066788	65.72102356	-0.2473374	-13.1436768	0.105767764	-13.3468771
F263	COMB3	2.25	-8.18066788	83.27045441	-0.2473374	-13.1436768	0.291270763	-69.4918289
F263	COMB3	3	-8.18066788	96.44926453	-0.2473374	-13.1436768	0.476773739	-137.159866
F264	D	0	7.730910301	41.47351456	-0.07354599	1.566466212	-0.12154774	81.35652924
F264	D	0.75	7.730910301	48.18413544	-0.07354599	1.566466212	-0.06638826	48.2025032
F264	D	1.5	7.730910301	62.37600708	-0.07354599	1.566466212	-0.01122878	7.210037231
F264	D	2.25	7.730910301	76.56787872	-0.07354599	1.566466212	0.043930694	-45.3614769
F264	D	3	7.730910301	83.27850342	-0.07354599	1.566466212	0.099090174	-105.771431
F264	L	0	2.794228792	13.75763035	-0.03589729	0.417815536	-0.05664686	25.58336067
F264	L	0.75	2.794228792	15.16388035	-0.03589729	0.417815536	-0.02972391	14.91357994
F264	L	1.5	2.794228792	19.38262939	-0.03589729	0.417815536	-0.00280094	2.134423733
F264	L	2.25	2.794228792	23.60137749	-0.03589729	0.417815536	0.024122017	-14.1603546
F264	L	3	2.794228792	25.00762749	-0.03589729	0.417815536	0.051044978	-32.5645065
F264	EX	0	-0.22309558	0.644529104	0.109718621	4.255241871	0.276630759	0.637033343
F264	EX	0.75	-0.22309558	0.644529104	0.109718621	4.255241871	0.194341823	0.153636694
F264	EX	1.5	-0.22309558	0.644529104	0.109718621	4.255241871	0.112052873	-0.32976002
F264	EX	2.25	-0.22309558	0.644529104	0.109718621	4.255241871	0.029763939	-0.81315666
F264	EX	3	-0.22309558	0.644529104	0.109718621	4.255241871	-0.052525	-1.29655337
F264	EY	0	-12.5453558	13.40625191	-0.47520319	0.000552062	-0.52112293	-0.01617939
F264	EY	0.75	-12.5453558	13.40625191	-0.47520319	0.000552062	-0.16472064	-10.0708647
F264	EY	1.5	-12.5453558	13.40625191	-0.47520319	0.000552062	0.191681638	-20.1255493
F264	EY	2.25	-12.5453558	13.40625191	-0.47520319	0.000552062	0.548083961	-30.180233
F264	EY	3	-12.5453558	13.40625191	-0.47520319	0.000552062	0.904486179	-40.2349205
F264	COMB1	0	13.74785805	71.78042603	-0.14569086	2.548264265	-0.23649228	138.5612183
F264	COMB1	0.75	13.74785805	82.08317566	-0.14569086	2.548264265	-0.12722416	81.70472717
F264	COMB1	1.5	13.74785805	105.8634186	-0.14569086	2.548264265	-0.01795605	12.06712246
F264	COMB1	2.25	13.74785805	129.6436615	-0.14569086	2.548264265	0.091312058	-77.0903397
F264	COMB1	3	13.74785805	139.9464111	-0.14569086	2.548264265	0.200580165	-179.028931
F264	COMB2	0	4.814946651	52.77090073	-0.12466118	6.18075037	-0.02330977	94.13735199
F264	COMB2	0.75	4.814946651	60.26002121	-0.12466118	6.18075037	0.070186079	52.29709625
F264	COMB2	1.5	4.814946651	76.49039459	-0.12466118	6.18075037	0.163681924	1.5620327
F264	COMB2	2.25	4.814946651	92.7207646	-0.12466118	6.18075037	0.25717777	-62.4384537
F264	COMB2	3	4.814946651	100.2098846	-0.12466118	6.18075037	0.350673646	-135.333755
F264	COMB3	0	-4.24526119	62.16043472	-0.55293292	3.117382288	-0.60550928	93.66679382
F264	COMB3	0.75	-4.24526119	69.64955902	-0.55293292	3.117382288	-0.19080971	44.78439331
F264	COMB3	1.5	-4.24526119	85.87992859	-0.55293292	3.117382288	0.223889858	-12.9928198
F264	COMB3	2.25	-4.24526119	102.1102982	-0.55293292	3.117382288	0.638589442	-84.0354538

F264	COMB3	3	-4.24526119	109.5994186	-0.55293292	3.117382288	1.053288937	-163.9729
F265	D	0	8.387349129	38.82715607	-0.00920947	-0.08806141	-0.01282275	77.80127716
F265	D	0.75	8.387349129	45.53777695	-0.00920947	-0.08806141	-0.00591565	46.63201141
F265	D	1.5	8.387349129	59.72964859	-0.00920947	-0.08806141	0.000991447	7.624318123
F265	D	2.25	8.387349129	73.92150879	-0.00920947	-0.08806141	0.007898543	-42.962429
F265	D	3	8.387349129	80.63213348	-0.00920947	-0.08806141	0.01480564	-101.387611
F265	L	0	2.976763487	12.88949871	-0.01011288	-0.00071801	-0.01667932	24.45946884
F265	L	0.75	2.976763487	14.29574871	-0.01011288	-0.00071801	-0.00909467	14.44078541
F265	L	1.5	2.976763487	18.51449776	-0.01011288	-0.00071801	-0.00151001	2.312727928
F265	L	2.25	2.976763487	22.73324585	-0.01011288	-0.00071801	0.006074639	-13.3309517
F265	L	3	2.976763487	24.13949585	-0.01011288	-0.00071801	0.013659293	-31.0840054
F265	EX	0	-0.97441173	0.178546369	-0.25740692	3.990910292	-0.22160961	-0.09616759
F265	EX	0.75	-0.97441173	0.178546369	-0.25740692	3.990910292	-0.02855449	-0.23007733
F265	EX	1.5	-0.97441173	0.178546369	-0.25740692	3.990910292	0.164500624	-0.36398706
F265	EX	2.25	-0.97441173	0.178546369	-0.25740692	3.990910292	0.357555747	-0.49789682
F265	EX	3	-0.97441173	0.178546369	-0.25740692	3.990910292	0.55061084	-0.63180655
F265	EY	0	-13.7668581	11.90692997	-0.3151814	0.000698987	-0.33636206	-0.06297936
F265	EY	0.75	-13.7668581	11.90692997	-0.3151814	0.000698987	-0.09997607	-8.9931736
F265	EY	1.5	-13.7668581	11.90692997	-0.3151814	0.000698987	0.136409909	-17.9233685
F265	EY	2.25	-13.7668581	11.90692997	-0.3151814	0.000698987	0.37279588	-26.8535633
F265	EY	3	-13.7668581	11.90692997	-0.3151814	0.000698987	0.609181821	-35.7837601
F265	COMB1	0	14.82763958	67.21578217	-0.02723196	-0.10682251	-0.04207421	132.4966736
F265	COMB1	0.75	14.82763958	77.5185318	-0.02723196	-0.10682251	-0.02165025	79.06367493
F265	COMB1	1.5	14.82763958	101.2987747	-0.02723196	-0.10682251	-0.00122629	12.84954643
F265	COMB1	2.25	14.82763958	125.07901	-0.02723196	-0.10682251	0.019197674	-72.8844376
F265	COMB1	3	14.82763958	135.3817596	-0.02723196	-0.10682251	0.039621636	-171.399536
F265	COMB2	0	4.399320126	48.76418304	-0.37855381	4.0381217	-0.35403788	89.27670288
F265	COMB2	0.75	4.399320126	56.25330734	-0.37855381	4.0381217	-0.07012261	50.44148254
F265	COMB2	1.5	4.399320126	72.48368073	-0.37855381	4.0381217	0.213792637	2.711455822
F265	COMB2	2.25	4.399320126	88.71403503	-0.37855381	4.0381217	0.497707874	-58.2839966
F265	COMB2	3	4.399320126	96.20316315	-0.37855381	4.0381217	0.781623125	-128.174255
F265	COMB3	0	-5.01774406	57.38722229	-0.42487916	1.165179968	-0.44170505	89.2996521
F265	COMB3	0.75	-5.01774406	64.87634277	-0.42487916	1.165179968	-0.12304579	43.99715424
F265	COMB3	1.5	-5.01774406	81.10671997	-0.42487916	1.165179968	0.195613459	-10.2001495
F265	COMB3	2.25	-5.01774406	97.33708191	-0.42487916	1.165179968	0.51427269	-77.6628799
F265	COMB3	3	-5.01774406	104.8262024	-0.42487916	1.165179968	0.832931936	-154.020416
F266	D	0	8.387965202	38.79307556	0.008528934	0.140584767	0.011596545	77.75146484
F266	D	0.75	8.387965202	45.50369644	0.008528934	0.140584767	0.005199846	46.60776138
F266	D	1.5	8.387965202	59.69556427	0.008528934	0.140584767	-0.00119685	7.625632763
F266	D	2.25	8.387965202	73.88742828	0.008528934	0.140584767	-0.00759355	-42.9355507
F266	D	3	8.387965202	80.59805298	0.008528934	0.140584767	-0.01399025	-101.335167
F266	L	0	3.036852837	12.99888802	0.009034602	-0.0604258	0.013997832	24.61939812
F266	L	0.75	3.036852837	14.40513706	0.009034602	-0.0604258	0.007221882	14.51867104
F266	L	1.5	3.036852837	18.62388611	0.009034602	-0.0604258	0.000445933	2.308572531
F266	L	2.25	3.036852837	22.8426342	0.009034602	-0.0604258	-0.00633002	-13.4171486
F266	L	3	3.036852837	24.2488842	0.009034602	-0.0604258	-0.01310597	-31.2522449
F266	EX	0	0.923909545	-0.17744263	-0.41441286	3.979991674	-0.45345885	0.102255218
F266	EX	0.75	0.923909545	-0.17744263	-0.41441286	3.979991674	-0.14264934	0.235337153
F266	EX	1.5	0.923909545	-0.17744263	-0.41441286	3.979991674	0.1681602	0.368419051
F266	EX	2.25	0.923909545	-0.17744263	-0.41441286	3.979991674	0.478969753	0.501500964
F266	EX	3	0.923909545	-0.17744263	-0.41441286	3.979991674	0.789779305	0.634582937
F266	EY	0	-13.7672873	11.90691662	0.315201819	-0.00069878	0.336384296	-0.06298503
F266	EY	0.75	-13.7672873	11.90691662	0.315201819	-0.00069878	0.099983014	-8.99316978
F266	EY	1.5	-13.7672873	11.90691662	0.315201819	-0.00069878	-0.13641828	-17.9233551
F266	EY	2.25	-13.7672873	11.90691662	0.315201819	-0.00069878	-0.37281957	-26.8535385
F266	EY	3	-13.7672873	11.90691662	0.315201819	-0.00069878	-0.60922092	-35.7837257
F266	COMB1	0	14.9245224	67.34990692	0.024690084	0.072020434	0.036312386	132.6927948
F266	COMB1	0.75	14.9245224	77.65265656	0.024690084	0.072020434	0.017794827	79.15918732
F266	COMB1	1.5	14.9245224	101.4328918	0.024690084	0.072020434	-0.00072273	12.84447575
F266	COMB1	2.25	14.9245224	125.2131348	0.024690084	0.072020434	-0.01924029	-72.9901047
F266	COMB1	3	14.9245224	135.5158844	0.024690084	0.072020434	-0.03775784	-171.605789
F266	COMB2	0	6.383522511	48.39440155	-0.31782743	4.2476511	-0.34678316	89.48014069
F266	COMB2	0.75	6.383522511	55.88352585	-0.31782743	4.2476511	-0.10841268	50.92225647
F266	COMB2	1.5	6.383522511	72.1138916	-0.31782743	4.2476511	0.129957825	3.469571829
F266	COMB2	2.25	6.383522511	88.34426117	-0.31782743	4.2476511	0.368328363	-57.2485428
F266	COMB2	3	6.383522511	95.83338165	-0.31782743	4.2476511	0.606698871	-126.861465
F266	COMB3	0	-4.40064859	57.27374649	0.212223157	1.381543517	0.226949677	89.36022186
F266	COMB3	0.75	-4.40064859	64.76287079	0.212223157	1.381543517	0.067782357	44.14283371
F266	COMB3	1.5	-4.40064859	80.99323273	0.212223157	1.381543517	-0.09138495	-9.96935558
F266	COMB3	2.25	-4.40064859	97.22360229	0.212223157	1.381543517	-0.25055227	-77.3469772
F266	COMB3	3	-4.40064859	104.7127228	0.212223157	1.381543517	-0.40971962	-153.6194
F267	D	0	7.807556629	41.5957489	0.072588526	-1.69139278	0.119016469	81.54595947
F267	D	0.75	7.807556629	48.30636978	0.072588526	-1.69139278	0.064575091	48.30025482
F267	D	1.5	7.807556629	62.49823761	0.072588526	-1.69139278	0.010133712	7.216115475
F267	D	2.25	7.807556629	76.69010162	0.072588526	-1.69139278	-0.04430767	-45.4470711
F267	D	3	7.807556629	83.40072632	0.072588526	-1.69139278	-0.09874905	-105.948692
F267	L	0	3.720824957	13.6969738	0.035007223	-0.56046116	0.05401076	29.94903755
F267	L	0.75	3.720824957	16.36884689	0.035007223	-0.56046116	0.027755354	19.00834274
F267	L	1.5	3.720824957	24.38446999	0.035007223	-0.56046116	0.001499944	4.059836864
F267	L	2.25	3.720824957	32.40009308	0.035007223	-0.56046116	-0.02475546	-17.5683537
F267	L	3	3.720824957	35.07196808	0.035007223	-0.56046116	-0.05101087	-43.2043495
F267	EX	0	0.108901501	-0.63165563	-0.38931057	4.21437645	-0.47004244	-0.61765546
F267	EX	0.75	0.108901501	-0.63165563	-0.38931057	4.21437645	-0.17805962	-0.14391388
F267	EX	1.5	0.108901501	-0.63165563	-0.38931057	4.21437645	0.113923199	0.329827726

F267	EX	2.25	0.108901501	-0.63165563	-0.38931057	4.21437645	0.405905992	0.803569317
F267	EX	3	0.108901501	-0.63165563	-0.38931057	4.21437645	0.697888792	1.277310848
F267	EY	0	-12.5453844	13.40626144	0.47518912	-0.00055225	0.521108329	-0.01617977
F267	EY	0.75	-12.5453844	13.40626144	0.47518912	-0.00055225	0.164716572	-10.0708733
F267	EY	1.5	-12.5453844	13.40626144	0.47518912	-0.00055225	-0.19167516	-20.1255665
F267	EY	2.25	-12.5453844	13.40626144	0.47518912	-0.00055225	-0.54806691	-30.1802578
F267	EY	3	-12.5453844	13.40626144	0.47518912	-0.00055225	-0.90445864	-40.234951
F267	COMB1	0	15.3223877	71.83005524	0.143117785	-2.92640924	0.229236975	145.7736053
F267	COMB1	0.75	15.3223877	84.15779877	0.143117785	-2.92640924	0.121898673	88.3736496
F267	COMB1	1.5	15.3223877	114.0130386	0.143117785	-2.92640924	0.014560365	15.15507793
F267	COMB1	2.25	15.3223877	143.8682709	0.143117785	-2.92640924	-0.09277795	-82.6458511
F267	COMB1	3	15.3223877	156.1960144	0.143117785	-2.92640924	-0.20011625	-196.265396
F267	COMB2	0	5.530910969	51.55929184	-0.16600662	2.409198284	-0.18036413	94.41283417
F267	COMB2	0.75	5.530910969	59.44708252	-0.16600662	2.409198284	-0.0558592	53.3816185
F267	COMB2	1.5	5.530910969	76.87346649	-0.16600662	2.409198284	0.068645716	2.85758853
F267	COMB2	2.25	5.530910969	94.29985046	-0.16600662	2.409198284	0.19315061	-61.9285431
F267	COMB2	3	5.530910969	102.1876373	-0.16600662	2.409198284	0.317655534	-136.207489
F267	COMB3	0	-3.76835561	61.86768341	0.463560969	-0.62555891	0.541081071	94.84564972
F267	COMB3	0.75	-3.76835561	69.75547791	0.463560969	-0.62555891	0.193410411	46.08314514
F267	COMB3	1.5	-3.76835561	87.18186188	0.463560969	-0.62555891	-0.15426023	-12.1721783
F267	COMB3	2.25	-3.76835561	104.6082382	0.463560969	-0.62555891	-0.50193089	-84.6896057
F267	COMB3	3	-3.76835561	112.4960327	0.463560969	-0.62555891	-0.84960151	-166.699844
F268	D	0	5.839159966	17.66332245	0.185994044	12.03392887	0.277939707	60.68964386
F268	D	0.75	5.839159966	31.87394333	0.185994044	12.03392887	0.138444215	42.58074951
F268	D	1.5	5.839159966	53.56581116	0.185994044	12.03392887	-0.00105128	11.00843048
F268	D	2.25	5.839159966	75.25767517	0.185994044	12.03392887	-0.14054678	-37.7679367
F268	D	3	5.839159966	89.46829987	0.185994044	12.03392887	-0.28004226	-100.007736
F268	L	0	2.841659546	5.966650963	0.074727617	4.277936935	0.112745248	18.35312843
F268	L	0.75	2.841659546	8.638525009	0.074727617	4.277936935	0.056699555	13.21017265
F268	L	1.5	2.841659546	16.6541481	0.074727617	4.277936935	0.00065386	4.059406757
F268	L	2.25	2.841659546	24.66976929	0.074727617	4.277936935	-0.05539184	-11.7710419
F268	L	3	2.841659546	27.34164429	0.074727617	4.277936935	-0.11143753	-31.6093025
F268	EX	0	0.579399168	0.927326202	-0.42075628	3.359202623	-0.51967257	1.761150956
F268	EX	0.75	0.579399168	0.927326202	-0.42075628	3.359202623	-0.20410541	1.065656424
F268	EX	1.5	0.579399168	0.927326202	-0.42075628	3.359202623	0.111461699	0.370161951
F268	EX	2.25	0.579399168	0.927326202	-0.42075628	3.359202623	0.427028805	-0.32533249
F268	EX	3	0.579399168	0.927326202	-0.42075628	3.359202623	0.742595971	-1.02082694
F268	EY	0	-12.5761795	14.04036522	0.170958132	0.000319071	0.188398018	-0.01901862
F268	EY	0.75	-12.5761795	14.04036522	0.170958132	0.000319071	0.060179461	-10.5492897
F268	EY	1.5	-12.5761795	14.04036522	0.170958132	0.000319071	-0.0680391	-21.0795612
F268	EY	2.25	-12.5761795	14.04036522	0.170958132	0.000319071	-0.19625767	-31.6098328
F268	EY	3	-12.5761795	14.04036522	0.170958132	0.000319071	-0.32447624	-42.1401024
F268	COMB1	0	11.55364704	30.74263	0.342757046	21.28541374	0.513920069	102.1925735
F268	COMB1	0.75	11.55364704	52.07037354	0.342757046	21.28541374	0.256852329	72.23317719
F268	COMB1	1.5	11.55364704	90.92560577	0.342757046	21.28541374	-0.00021536	19.70516777
F268	COMB1	2.25	11.55364704	129.780838	0.342757046	21.28541374	-0.25728306	-64.1551895
F268	COMB1	3	11.55364704	151.1085815	0.342757046	21.28541374	-0.51435077	-170.584167
F268	COMB2	0	3.664422274	25.80848122	-0.162798	17.46005058	-0.15116425	71.32215881
F268	COMB2	0.75	3.664422274	41.5712738	-0.162798	17.46005058	-0.02906579	46.65092087
F268	COMB2	1.5	3.664422274	66.87265778	-0.162798	17.46005058	0.093032666	6.580620766
F268	COMB2	2.25	3.664422274	92.17403412	-0.162798	17.46005058	0.215131104	-53.6580276
F268	COMB2	3	3.664422274	107.9368286	-0.162798	17.46005058	0.337229609	-129.295746
F268	COMB3	0	-5.9962368	35.46047592	0.265800744	15.04165936	0.361472517	70.0401535
F268	COMB3	0.75	-5.9962368	51.2232666	0.265800744	15.04165936	0.162122011	38.12992096
F268	COMB3	1.5	-5.9962368	76.52465057	0.265800744	15.04165936	-0.0372285	-9.17937374
F268	COMB3	2.25	-5.9962368	101.8260269	0.265800744	15.04165936	-0.23657902	-76.6570129
F268	COMB3	3	-5.9962368	117.5888214	0.265800744	15.04165936	-0.43592951	-159.533722
F269	D	0	6.009444714	-39.4414482	-0.02914402	0.003642224	-0.07655326	-27.7139835
F269	D	1.25	6.009444714	-25.000824	-0.02914402	0.003642224	-0.04012324	14.72715187
F269	D	2.5	6.009444714	3.57104516	-0.02914402	0.003642224	-0.00369322	28.34589577
F269	D	3.75	6.009444714	32.14291382	-0.02914402	0.003642224	0.032736797	5.799538612
F269	D	5	6.009444714	46.58353806	-0.02914402	0.003642224	0.069166817	-45.5692062
F269	L	0	2.12364769	-12.1336336	-0.00459156	0.003303374	-0.01205257	-8.96244621
F269	L	1.25	2.12364769	-8.22738361	-0.00459156	0.003303374	-0.00631311	4.576992512
F269	L	2.5	2.12364769	0.991366804	-0.00459156	0.003303374	-0.00057366	9.184138298
F269	L	3.75	2.12364769	10.21011734	-0.00459156	0.003303374	0.005165794	2.098575592
F269	L	5	2.12364769	14.11636734	-0.00459156	0.003303374	0.010905248	-13.9192801
F269	EX	0	-19.0829144	19.49876022	0.081761762	0.004568096	0.208833322	51.9579277
F269	EX	1.25	-19.0829144	19.49876022	0.081761762	0.004568096	0.106631115	27.58447456
F269	EX	2.5	-19.0829144	19.49876022	0.081761762	0.004568096	0.004428907	3.211024523
F269	EX	3.75	-19.0829144	19.49876022	0.081761762	0.004568096	-0.0977733	-21.162426
F269	EX	5	-19.0829144	19.49876022	0.081761762	0.004568096	-0.19997551	-45.5358772
F269	EY	0	0.000238477	-1.4116E-05	0.233899146	0.086120442	0.653596282	7.19052E-05
F269	EY	1.25	0.000238477	-1.4116E-05	0.233899146	0.086120442	0.361222327	8.95501E-05
F269	EY	2.5	0.000238477	-1.4116E-05	0.233899146	0.086120442	0.068848386	0.000107195
F269	EY	3.75	0.000238477	-1.4116E-05	0.233899146	0.086120442	-0.22352555	0.00012484
F269	EY	5	0.000238477	-1.4116E-05	0.233899146	0.086120442	-0.51589948	0.000142485
F269	COMB1	0	10.60916996	-66.7435532	-0.04231932	0.009656068	-0.11114803	-47.5966949
F269	COMB1	1.25	10.60916996	-43.1648026	-0.04231932	0.009656068	-0.05824887	24.9957695
F269	COMB1	2.5	10.60916996	5.871440887	-0.04231932	0.009656068	-0.00534972	48.70969772
F269	COMB1	3.75	10.60916996	54.90768433	-0.04231932	0.009656068	0.047549427	10.31716728
F269	COMB1	5	10.60916996	78.48643494	-0.04231932	0.009656068	0.100448579	-76.9538956
F269	COMB2	0	-12.7718754	-25.0544033	0.126254097	0.036720816	0.337847829	21.85362434
F269	COMB2	1.25	-12.7718754	-8.66127968	0.126254097	0.036720816	0.180030212	45.45522308

F269	COMB2	2.5	-12.7718754	24.24308968	0.126254097	0.036720816	0.022212572	35.97963715
F269	COMB2	3.75	-12.7718754	57.14746094	0.126254097	0.036720816	-0.13560505	-15.1525049
F269	COMB2	5	-12.7718754	73.54058075	0.126254097	0.036720816	-0.29342267	-99.3618317
F269	COMB3	0	0.967998385	-39.0935211	0.239301488	0.096730307	0.667881072	-15.5560303
F269	COMB3	1.25	0.967998385	-22.7003975	0.239301488	0.096730307	0.368754208	25.59446526
F269	COMB3	2.5	0.967998385	10.20397282	0.239301488	0.096730307	0.069627322	33.66777802
F269	COMB3	3.75	0.967998385	43.10834122	0.239301488	0.096730307	-0.22949956	0.084533796
F269	COMB3	5	0.967998385	59.50146484	0.239301488	0.096730307	-0.52862644	-66.5758896
F270	D	0	5.076117039	-43.0278282	-0.0241967	-0.05424476	-0.05549212	-42.5753403
F270	D	1.25	5.076117039	-28.587204	-0.0241967	-0.05424476	-0.02524625	4.348768711
F270	D	2.5	5.076117039	-0.01533462	-0.0241967	-0.05424476	0.004999631	22.45048714
F270	D	3.75	5.076117039	28.55653572	-0.0241967	-0.05424476	0.035245508	4.387104988
F270	D	5	5.076117039	42.99716187	-0.0241967	-0.05424476	0.065491386	-42.4986687
F270	L	0	1.899365783	-13.1506157	-0.00415815	-0.01722736	-0.00966364	-13.4346695
F270	L	1.25	1.899365783	-9.24436665	-0.00415815	-0.01722736	-0.00446595	1.375996828
F270	L	2.5	1.899365783	-0.02561568	-0.00415815	-0.01722736	0.00073174	7.254371166
F270	L	3.75	1.899365783	9.193135262	-0.00415815	-0.01722736	0.005929431	1.440036178
F270	L	5	1.899365783	13.09938431	-0.00415815	-0.01722736	0.011127123	-13.306591
F270	EX	0	-14.8347082	16.57409477	0.033565424	-0.00160551	0.113216177	41.18530655
F270	EX	1.25	-14.8347082	16.57409477	0.033565424	-0.00160551	0.071259402	20.46768761
F270	EX	2.5	-14.8347082	16.57409477	0.033565424	-0.00160551	0.029302618	-0.24993353
F270	EX	3.75	-14.8347082	16.57409477	0.033565424	-0.00160551	-0.01265416	-20.9675541
F270	EX	5	-14.8347082	16.57409477	0.033565424	-0.00160551	-0.05461094	-41.685173
F270	EY	0	0.000348084	-0.00063029	0.508564472	0.198265448	1.237589002	-0.00159227
F270	EY	1.25	0.000348084	-0.00063029	0.508564472	0.198265448	0.601883411	-0.00080441
F270	EY	2.5	0.000348084	-0.00063029	0.508564472	0.198265448	-0.0338222	-1.6547E-05
F270	EY	3.75	0.000348084	-0.00063029	0.508564472	0.198265448	-0.66952783	0.000771314
F270	EY	5	0.000348084	-0.00063029	0.508564472	0.198265448	-1.30523336	0.001559176
F270	COMB1	0	9.130326271	-72.6743774	-0.03568909	-0.0926575	-0.08205237	-72.5858841
F270	COMB1	1.25	9.130326271	-49.0956306	-0.03568909	-0.0926575	-0.03744102	7.420117378
F270	COMB1	2.5	9.130326271	-0.05938663	-0.03568909	-0.0926575	0.007170341	38.5475769
F270	COMB1	3.75	9.130326271	48.97686005	-0.03568909	-0.0926575	0.051781703	7.568583965
F270	COMB1	5	9.130326271	72.55561066	-0.03568909	-0.0926575	0.096393056	-72.2889481
F270	COMB2	0	-9.42558956	-32.1676712	0.168221667	-0.00159171	0.445708513	-6.30973673
F270	COMB2	1.25	-9.42558956	-15.7745495	0.168221667	-0.00159171	0.235431418	26.18344879
F270	COMB2	2.5	-9.42558956	17.12981987	0.168221667	-0.00159171	0.025154324	25.59945107
F270	COMB2	3.75	-9.42558956	50.03419113	0.168221667	-0.00159171	-0.18512276	-16.6411037
F270	COMB2	5	-9.42558956	66.42731476	0.168221667	-0.00159171	-0.39539984	-91.9588394
F270	COMB3	0	1.255655646	-44.1014824	0.517849445	0.145289361	1.273820758	-35.9643288
F270	COMB3	1.25	1.255655646	-27.7083626	0.517849445	0.145289361	0.626508951	11.44612312
F270	COMB3	2.5	1.255655646	5.196008205	0.517849445	0.145289361	-0.02080288	25.77939224
F270	COMB3	3.75	1.255655646	38.10037994	0.517849445	0.145289361	-0.66811472	-1.54389811
F270	COMB3	5	1.255655646	54.49350357	0.517849445	0.145289361	-1.31542647	-61.9443703
F271	D	0	4.784145355	-42.9464226	0.001598567	0.000120516	0.010545271	-41.7301369
F271	D	1.25	4.784145355	-28.5058022	0.001598567	0.000120516	0.008547061	5.092217445
F271	D	2.5	4.784145355	0.066068634	0.001598567	0.000120516	0.006548854	23.09218216
F271	D	3.75	4.784145355	28.63793755	0.001598567	0.000120516	0.004550645	4.927045822
F271	D	5	4.784145355	43.07856369	0.001598567	0.000120516	0.002552436	-42.060482
F271	L	0	1.81282866	-13.0156908	0.001406429	0.00077875	0.004918273	-12.9833326
F271	L	1.25	1.81282866	-9.10944176	0.001406429	0.00077875	0.003160237	1.658678532
F271	L	2.5	1.81282866	0.109308913	0.001406429	0.00077875	0.001402201	7.368397236
F271	L	3.75	1.81282866	9.328059196	0.001406429	0.00077875	-0.00035584	1.385406256
F271	L	5	1.81282866	13.2343092	0.001406429	0.00077875	-0.00211387	-13.5298767
F271	EX	0	-11.036046	16.75945854	0.302094758	0.064026468	0.755443692	41.92065048
F271	EX	1.25	-11.036046	16.75945854	0.302094758	0.064026468	0.37782526	20.97132492
F271	EX	2.5	-11.036046	16.75945854	0.302094758	0.064026468	0.000206751	0.022000577
F271	EX	3.75	-11.036046	16.75945854	0.302094758	0.064026468	-0.37741172	-20.9273243
F271	EX	5	-11.036046	16.75945854	0.302094758	0.064026468	-0.75503021	-41.8766479
F271	EY	0	0.000356013	1.65605E-07	-2.9126E-05	1.10979E-06	-0.14682259	-0.00016209
F271	EY	1.25	0.000356013	1.65605E-07	-2.9126E-05	1.10979E-06	-0.14678618	-0.00016229
F271	EY	2.5	0.000356013	1.65605E-07	-2.9126E-05	1.10979E-06	-0.14674976	-0.0001625
F271	EY	3.75	0.000356013	1.65605E-07	-2.9126E-05	1.10979E-06	-0.14671336	-0.00016271
F271	EY	5	0.000356013	1.65605E-07	-2.9126E-05	1.10979E-06	-0.14667694	-0.00016291
F271	COMB1	0	8.641500473	-72.360817	0.004168566	0.001390619	0.020523561	-70.8494949
F271	COMB1	1.25	8.641500473	-48.7820702	0.004168566	0.001390619	0.015312852	8.764546394
F271	COMB1	2.5	8.641500473	0.254176617	0.004168566	0.001390619	0.010102145	39.50005341
F271	COMB1	3.75	8.641500473	49.29042053	0.004168566	0.001390619	0.004891436	8.129105568
F271	COMB1	5	8.641500473	72.86917114	0.004168566	0.001390619	-0.00031927	-72.1203842
F271	COMB2	0	-5.8278017	-31.8476486	0.314780414	0.066639587	0.748256922	-4.5185709
F271	COMB2	1.25	-5.8278017	-15.4545259	0.314780414	0.066639587	0.354781359	27.57458115
F271	COMB2	2.5	-5.8278017	17.44984436	0.314780414	0.066639587	-0.0386942	26.59055519
F271	COMB2	3.75	-5.8278017	50.35421371	0.314780414	0.066639587	-0.43216977	-16.0500298
F271	COMB2	5	-5.8278017	66.74733734	0.314780414	0.066639587	-0.82564533	-91.7677994
F271	COMB3	0	2.11841321	-43.9144592	0.097250789	0.020541349	0.096422844	-34.7015572
F271	COMB3	1.25	2.11841321	-27.5213356	0.097250789	0.020541349	-0.02514064	12.4751091
F271	COMB3	2.5	2.11841321	5.383034229	0.097250789	0.020541349	-0.14670415	26.5745945
F271	COMB3	3.75	2.11841321	38.28740311	0.097250789	0.020541349	-0.26826763	-0.98247671
F271	COMB3	5	2.11841321	54.68052673	0.097250789	0.020541349	-0.38983113	-61.6167336
F272	D	0	4.950124264	-42.7945709	0.026401095	0.054777853	0.070517242	-42.079483
F272	D	1.25	4.950124264	-28.3539467	0.026401095	0.054777853	0.037515871	4.553055286
F272	D	2.5	4.950124264	0.217922792	0.026401095	0.054777853	0.004514503	22.36320114
F272	D	3.75	4.950124264	28.78979301	0.026401095	0.054777853	-0.02848687	4.008248329
F272	D	5	4.950124264	43.23041534	0.026401095	0.054777853	-0.06148823	-43.1690979
F272	L	0	1.873510122	-13.2154522	0.004066364	0.019613484	0.010750626	-13.6346464

F272	L	1.25	1.873510122	-9.30920219	0.004066364	0.019613484	0.005667671	1.257065415
F272	L	2.5	1.873510122	-0.09045205	0.004066364	0.019613484	0.000584717	7.216485023
F272	L	3.75	1.873510122	9.128297806	0.004066364	0.019613484	-0.00449824	1.483195543
F272	L	5	1.873510122	13.03454876	0.004066364	0.019613484	-0.00958119	-13.1823864
F272	EX	0	-7.60570431	16.47454262	0.031767357	-0.0019896	0.049563579	41.4765625
F272	EX	1.25	-7.60570431	16.47454262	0.031767357	-0.0019896	0.009854385	20.8833847
F272	EX	2.5	-7.60570431	16.47454262	0.031767357	-0.0019896	-0.02985481	0.290207148
F272	EX	3.75	-7.60570431	16.47454262	0.031767357	-0.0019896	-0.06956401	-20.3029709
F272	EX	5	-7.60570431	16.47454262	0.031767357	-0.0019896	-0.1092732	-40.8961449
F272	EY	0	0.000348094	0.000630699	-0.50854212	-0.19826797	-1.30516946	0.001560172
F272	EY	1.25	0.000348094	0.000630699	-0.50854212	-0.19826797	-0.66949189	0.000771798
F272	EY	2.5	0.000348094	0.000630699	-0.50854212	-0.19826797	-0.0338142	-1.6576E-05
F272	EY	3.75	0.000348094	0.000630699	-0.50854212	-0.19826797	0.601863444	-0.00080495
F272	EY	5	0.000348094	0.000630699	-0.50854212	-0.19826797	1.237541199	-0.00159332
F272	COMB1	0	8.937765121	-72.4982071	0.038187496	0.097114995	0.101821691	-72.3108139
F272	COMB1	1.25	8.937765121	-48.9194603	0.038187496	0.097114995	0.054087318	7.474970818
F272	COMB1	2.5	8.937765121	0.116784066	0.038187496	0.097114995	0.00635295	38.38221741
F272	COMB1	3.75	8.937765121	49.15302658	0.038187496	0.097114995	-0.04138142	7.183010578
F272	COMB1	5	8.937765121	72.73177338	0.038187496	0.097114995	-0.08911579	-72.8947372
F272	COMB2	0	-2.08400822	-32.0458183	-0.0983095	-0.00081865	-0.28240055	-5.54963827
F272	COMB2	1.25	-2.08400822	-15.6526937	-0.0983095	-0.00081865	-0.15951367	26.79122925
F272	COMB2	2.5	-2.08400822	17.25167656	-0.0983095	-0.00081865	-0.03662679	26.05491257
F272	COMB2	3.75	-2.08400822	50.15604401	-0.0983095	-0.00081865	0.086260088	-16.3379612
F272	COMB2	5	-2.08400822	66.54917145	-0.0983095	-0.00081865	0.209146976	-91.8080139
F272	COMB3	0	3.392354727	-43.9070244	-0.49496046	-0.1451131	-1.27738595	-35.4116173
F272	COMB3	1.25	3.392354727	-27.5139008	-0.49496046	-0.1451131	-0.65868533	11.75576019
F272	COMB3	2.5	3.392354727	5.390469551	-0.49496046	-0.1451131	-0.03998476	25.84595108
F272	COMB3	3.75	3.392354727	38.29483795	-0.49496046	-0.1451131	0.578715801	-1.72041357
F272	COMB3	5	3.392354727	54.68796158	-0.49496046	-0.1451131	1.197416425	-62.3639641
F273	D	0	5.905757427	-46.8040695	0.028367665	0.000220135	0.066905849	-46.1729698
F273	D	1.25	5.905757427	-32.3634491	0.028367665	0.000220135	0.031446267	5.471442223
F273	D	2.5	5.905757427	-3.79157782	0.028367665	0.000220135	-0.00401331	28.29346466
F273	D	3.75	5.905757427	24.78029251	0.028367665	0.000220135	-0.03947289	14.950387
F273	D	5	5.905757427	39.22091675	0.028367665	0.000220135	-0.07493248	-27.2150822
F273	L	0	2.135164261	-14.0652542	0.006024406	-0.00153275	0.014460712	-13.7598495
F273	L	1.25	2.135164261	-10.1590052	0.006024406	-0.00153275	0.006930204	2.1941154
F273	L	2.5	2.135164261	-0.94025439	0.006024406	-0.00153275	-0.0006003	9.215787888
F273	L	3.75	2.135164261	8.278495789	0.006024406	-0.00153275	-0.00813081	4.544751167
F273	L	5	2.135164261	12.18474579	0.006024406	-0.00153275	-0.01566132	-9.05857658
F273	EX	0	-4.50515652	19.24482346	0.079394817	0.00384293	0.193932846	45.00064087
F273	EX	1.25	-4.50515652	19.24482346	0.079394817	0.00384293	0.094689324	20.94460869
F273	EX	2.5	-4.50515652	19.24482346	0.079394817	0.00384293	-0.0045542	-3.11142135
F273	EX	3.75	-4.50515652	19.24482346	0.079394817	0.00384293	-0.10379773	-27.1674519
F273	EX	5	-4.50515652	19.24482346	0.079394817	0.00384293	-0.20304126	-51.2234802
F273	EY	0	0.000238508	1.45899E-05	-0.23389429	-0.08612009	-0.51589	0.000143624
F273	EY	1.25	0.000238508	1.45899E-05	-0.23389429	-0.08612009	-0.22352211	0.000125387
F273	EY	2.5	0.000238508	1.45899E-05	-0.23389429	-0.08612009	0.068845764	0.000107149
F273	EY	3.75	0.000238508	1.45899E-05	-0.23389429	-0.08612009	0.361213624	8.8912E-05
F273	EY	5	0.000238508	1.45899E-05	-0.23389429	-0.08612009	0.6535815	7.06747E-05
F273	COMB1	0	10.50317192	-78.6692886	0.043680247	-0.00218824	0.103424154	-77.4233246
F273	COMB1	1.25	10.50317192	-55.0905457	0.043680247	-0.00218824	0.048823845	10.07631588
F273	COMB1	2.5	10.50317192	-6.05430031	0.043680247	-0.00218824	-0.00577646	48.69741821
F273	COMB1	3.75	10.50317192	42.98194504	0.043680247	-0.00218824	-0.06037677	25.21206665
F273	COMB1	5	10.50317192	66.56069183	0.043680247	-0.00218824	-0.11497708	-47.1518211
F273	COMB2	0	2.210860252	-33.6564331	0.040180668	-0.02340207	0.113021411	-6.24026489
F273	COMB2	1.25	2.210860252	-17.2633095	0.040180668	-0.02340207	0.062795579	28.11387062
F273	COMB2	2.5	2.210860252	15.64105988	0.040180668	-0.02340207	0.012569742	29.39082336
F273	COMB2	3.75	2.210860252	48.54542923	0.040180668	-0.02340207	-0.0376561	-10.9887819
F273	COMB2	5	2.210860252	64.93855286	0.040180668	-0.02340207	-0.08788194	-84.4455643
F273	COMB3	0	5.454748154	-47.5126953	-0.1888959	-0.08946725	-0.40578941	-38.6406212
F273	COMB3	1.25	5.454748154	-31.1195717	-0.1888959	-0.08946725	-0.16966948	13.03384495
F273	COMB3	2.5	5.454748154	1.784797788	-0.1888959	-0.08946725	0.066450402	31.6311264
F273	COMB3	3.75	5.454748154	34.68916702	-0.1888959	-0.08946725	0.302570283	8.571848869
F273	COMB3	5	5.454748154	51.08229065	-0.1888959	-0.08946725	0.53869015	-47.5646095
F274	D	0	4.634538651	-74.1186447	0.232300282	12.20455647	0.356097162	-83.6939163
F274	D	0.75	4.634538651	-61.778347	0.232300282	12.20455647	0.181872174	-32.4988174
F274	D	1.5	4.634538651	-45.6974258	0.232300282	12.20455647	0.007647161	8.038341522
F274	D	2.25	4.634538651	-29.6165104	0.232300282	12.20455647	-0.16657785	36.04724503
F274	D	3	4.634538651	-17.2762108	0.232300282	12.20455647	-0.34080288	53.39820862
F274	L	0	1.374675155	-11.4681234	0.081124917	4.304594994	0.122471966	-14.7147923
F274	L	0.75	1.374675155	-10.7649984	0.081124917	4.304594994	0.061628345	-6.28949118
F274	L	1.5	1.374675155	-8.6556263	0.081124917	4.304594994	0.000784731	1.081124902
F274	L	2.25	1.374675155	-6.54625368	0.081124917	4.304594994	-0.06005889	6.693932533
F274	L	3	1.374675155	-5.84312916	0.081124917	4.304594994	-0.1209025	11.25205517
F274	EX	0	-0.2393133	1.404148459	-0.57471251	-3.46985316	-0.83427697	2.478629112
F274	EX	0.75	-0.2393133	1.404148459	-0.57471251	-3.46985316	-0.40324306	1.42551899
F274	EX	1.5	-0.2393133	1.404148459	-0.57471251	-3.46985316	0.027790835	0.372408926
F274	EX	2.25	-0.2393133	1.404148459	-0.57471251	-3.46985316	0.458824724	-0.6807012
F274	EX	3	-0.2393133	1.404148459	-0.57471251	-3.46985316	0.889858663	-1.73381138
F274	EY	0	-8.78589725	13.64694691	-0.17142884	-0.00044986	-0.32489324	41.42477798
F274	EY	0.75	-8.78589725	13.64694691	-0.17142884	-0.00044986	-0.19632176	31.1895771
F274	EY	1.5	-8.78589725	13.64694691	-0.17142884	-0.00044986	-0.06775026	20.95438194
F274	EY	2.25	-8.78589725	13.64694691	-0.17142884	-0.00044986	0.060821224	10.71918106
F274	EY	3	-8.78589725	13.64694691	-0.17142884	-0.00044986	0.189392716	0.483983248

F274	COMB1	0	7.760926247	-107.291374	0.408560216	21.53281975	0.623271763	-123.976372
F274	COMB1	0.75	7.760926247	-91.358017	0.408560216	21.53281975	0.316851974	-49.0617638
F274	COMB1	1.5	7.760926247	-68.6859131	0.408560216	21.53281975	0.010432163	11.37580967
F274	COMB1	2.25	7.760926247	-46.0138168	0.408560216	21.53281975	-0.29598764	53.96698761
F274	COMB1	3	7.760926247	-30.0804596	0.408560216	21.53281975	-0.60240746	82.08113861
F274	COMB2	0	2.284041166	-75.6849518	-0.3793579	10.5792923	-0.55333734	-76.8995895
F274	COMB2	0.75	2.284041166	-62.5061569	-0.3793579	10.5792923	-0.26881921	-24.8048172
F274	COMB2	1.5	2.284041166	-44.9567375	-0.3793579	10.5792923	0.015698891	15.76688576
F274	COMB2	2.25	2.284041166	-27.4073238	-0.3793579	10.5792923	0.300217003	42.63021469
F274	COMB2	3	2.284041166	-14.2285242	-0.3793579	10.5792923	0.584735155	57.97047424
F274	COMB3	0	-4.00128746	-66.6654358	-0.09156509	13.07725525	-0.19145444	-48.2369919
F274	COMB3	0.75	-4.00128746	-53.4866371	-0.09156509	13.07725525	-0.1227807	-2.90685201
F274	COMB3	1.5	-4.00128746	-35.9372215	-0.09156509	13.07725525	-0.05410695	30.90022087
F274	COMB3	2.25	-4.00128746	-18.387804	-0.09156509	13.07725525	0.014566788	50.99891663
F274	COMB3	3	-4.00128746	-5.20900536	-0.09156509	13.07725525	0.083240531	59.57454681
F275	D	0	7.861328125	-82.5309372	0.145571873	-1.49702609	0.232283741	-104.704025
F275	D	0.75	7.861328125	-75.8203201	0.145571873	-1.49702609	0.12310496	-44.8547897
F275	D	1.5	7.861328125	-61.6284637	0.145571873	-1.49702609	0.013926179	7.156018734
F275	D	2.25	7.861328125	-47.4366035	0.145571873	-1.49702609	-0.0952526	47.58779526
F275	D	3	7.861328125	-40.7259865	0.145571873	-1.49702609	-0.20443138	80.18115234
F275	L	0	2.803577185	-24.7629929	0.047389612	-0.39449373	0.072812006	-32.1896896
F275	L	0.75	2.803577185	-23.3567467	0.047389612	-0.39449373	0.037269834	-13.9690294
F275	L	1.5	2.803577185	-19.1380005	0.047389612	-0.39449373	0.001727668	2.142262697
F275	L	2.25	2.803577185	-14.9192553	0.047389612	-0.39449373	-0.0338145	14.73793793
F275	L	3	2.803577185	-13.5130062	0.047389612	-0.39449373	-0.06935667	25.22424316
F275	EX	0	-0.16973025	-0.20117672	-0.26374108	-4.28109503	-0.37220356	0.031869635
F275	EX	0.75	-0.16973025	-0.20117672	-0.26374108	-4.28109503	-0.17439799	0.182751983
F275	EX	1.5	-0.16973025	-0.20117672	-0.26374108	-4.28109503	0.023407571	0.333634347
F275	EX	2.25	-0.16973025	-0.20117672	-0.26374108	-4.28109503	0.221213147	0.48451671
F275	EX	3	-0.16973025	-0.20117672	-0.26374108	-4.28109503	0.419018716	0.635399044
F275	EY	0	-8.75974751	13.03425026	-0.47546756	-0.00214575	-0.90474242	39.55957794
F275	EY	0.75	-8.75974751	13.03425026	-0.47546756	-0.00214575	-0.54814219	29.78390121
F275	EY	1.5	-8.75974751	13.03425026	-0.47546756	-0.00214575	-0.19154193	20.00822639
F275	EY	2.25	-8.75974751	13.03425026	-0.47546756	-0.00214575	0.16505833	10.23254871
F275	EY	3	-8.75974751	13.03425026	-0.47546756	-0.00214575	0.52165854	0.456872493
F275	COMB1	0	13.91931725	-138.657913	0.25050962	-2.42762113	0.395239681	-177.148331
F275	COMB1	0.75	13.91931725	-128.355179	0.25050962	-2.42762113	0.20735769	-76.1761932
F275	COMB1	1.5	13.91931725	-104.574959	0.25050962	-2.42762113	0.019475684	12.01484299
F275	COMB1	2.25	13.91931725	-80.7947311	0.25050962	-2.42762113	-0.16840632	80.68605042
F275	COMB1	3	13.91931725	-70.4919968	0.25050962	-2.42762113	-0.35628831	136.5761719
F275	COMB2	0	6.202529907	-90.560257	-0.25496608	-6.1277523	-0.40339085	-107.584724
F275	COMB2	0.75	6.202529907	-83.0711365	-0.25496608	-6.1277523	-0.2121665	-41.9266968
F275	COMB2	1.5	6.202529907	-66.8407898	-0.25496608	-6.1277523	-0.02094217	14.83653545
F275	COMB2	2.25	6.202529907	-50.6104317	-0.25496608	-6.1277523	0.17028217	58.33436203
F275	COMB2	3	6.202529907	-43.1213112	-0.25496608	-6.1277523	0.361506492	92.93739319
F275	COMB3	0	-0.11367926	-80.8352356	-0.41454118	-3.0469408	-0.80039001	-78.5313797
F275	COMB3	0.75	-0.11367926	-73.3461151	-0.41454118	-3.0469408	-0.48948446	-20.1671124
F275	COMB3	1.5	-0.11367926	-57.1157646	-0.41454118	-3.0469408	-0.17857894	29.30236435
F275	COMB3	2.25	-0.11367926	-40.8854103	-0.41454118	-3.0469408	0.132326588	65.50643158
F275	COMB3	3	-0.11367926	-33.3962898	-0.41454118	-3.0469408	0.443232059	92.81571198
F276	D	0	7.986847878	-79.9750366	0.046373807	0.126715392	0.074295394	-100.319923
F276	D	0.75	7.986847878	-73.2644196	0.046373807	0.126715392	0.039515082	-42.3876152
F276	D	1.5	7.986847878	-59.0725594	0.046373807	0.126715392	0.004734766	7.706267357
F276	D	2.25	7.986847878	-44.880703	0.046373807	0.126715392	-0.03004555	46.22111893
F276	D	3	7.986847878	-38.1700897	0.046373807	0.126715392	-0.06482586	76.89755249
F276	L	0	2.834379435	-23.9732456	0.014752016	0.014341795	0.022723529	-30.8336029
F276	L	0.75	2.834379435	-22.5669994	0.014752016	0.014341795	0.011659531	-13.2052517
F276	L	1.5	2.834379435	-18.3482513	0.014752016	0.014341795	0.00059553	2.31373024
F276	L	2.25	2.834379435	-14.1295071	0.014752016	0.014341795	-0.01046847	14.31709576
F276	L	3	2.834379435	-12.723259	0.014752016	0.014341795	-0.02153247	24.211092
F276	EX	0	-0.7314117	0.284243345	-0.15281411	-4.01577663	-0.2602872	0.770875216
F276	EX	0.75	-0.7314117	0.284243345	-0.15281411	-4.01577663	-0.14567672	0.557693005
F276	EX	1.5	-0.7314117	0.284243345	-0.15281411	-4.01577663	-0.03106626	0.344510704
F276	EX	2.25	-0.7314117	0.284243345	-0.15281411	-4.01577663	0.083544187	0.131328449
F276	EX	3	-0.7314117	0.284243345	-0.15281411	-4.01577663	0.198154628	-0.08185382
F276	EY	0	-9.14530563	11.61713982	-0.31524137	-0.00169597	-0.60925591	35.26893234
F276	EY	0.75	-9.14530563	11.61713982	-0.31524137	-0.00169597	-0.37282512	26.5560894
F276	EY	1.5	-9.14530563	11.61713982	-0.31524137	-0.00169597	-0.13639437	17.84324455
F276	EY	2.25	-9.14530563	11.61713982	-0.31524137	-0.00169597	0.100036375	9.130399704
F276	EY	3	-9.14530563	11.61713982	-0.31524137	-0.00169597	0.336467147	0.417554319
F276	COMB1	0	14.11922455	-134.32724	0.079251796	0.175005347	0.125512123	-169.717667
F276	COMB1	0.75	14.11922455	-124.024498	0.079251796	0.175005347	0.066073351	-71.9935455
F276	COMB1	1.5	14.11922455	-100.244278	0.079251796	0.175005347	0.006634568	12.94948959
F276	COMB1	2.25	14.11922455	-76.4640579	0.079251796	0.175005347	-0.05280421	78.37269592
F276	COMB1	3	14.11922455	-66.1613235	0.079251796	0.175005347	-0.11224299	131.0148163
F276	COMB2	0	5.641237736	-87.5717697	-0.20412426	-4.01929426	-0.37614477	-103.140938
F276	COMB2	0.75	5.641237736	-80.0826569	-0.20412426	-4.01929426	-0.22305174	-39.7242699
F276	COMB2	1.5	5.641237736	-63.8522987	-0.20412426	-4.01929426	-0.06995872	14.79759598
F276	COMB2	2.25	5.641237736	-47.6219406	-0.20412426	-4.01929426	0.083134294	56.05406189
F276	COMB2	3	5.641237736	-40.1328278	-0.20412426	-4.01929426	0.236227319	88.41573334
F276	COMB3	0	-0.55394584	-79.2378235	-0.32580051	-1.1291815	-0.63654113	-77.7733002
F276	COMB3	0.75	-0.55394584	-71.7487106	-0.32580051	-1.1291815	-0.39219096	-20.6070862
F276	COMB3	1.5	-0.55394584	-55.5183563	-0.32580051	-1.1291815	-0.14784087	27.66433334
F276	COMB3	2.25	-0.55394584	-39.2879982	-0.32580051	-1.1291815	0.096509218	62.67034912

F276	COMB3	3	-0.55394584	-31.7988853	-0.32580051	-1.1291815	0.340859324	88.78157043
F277	D	0	7.985532284	-79.9424286	-0.05271958	-0.18032594	-0.08573425	-100.272194
F277	D	0.75	7.985532284	-73.2318115	-0.05271958	-0.18032594	-0.04619461	-42.3643417
F277	D	1.5	7.985532284	-59.039959	-0.05271958	-0.18032594	-0.00665497	7.70509243
F277	D	2.25	7.985532284	-44.8481026	-0.05271958	-0.18032594	0.032884669	46.19549179
F277	D	3	7.985532284	-38.1374893	-0.05271958	-0.18032594	0.0724243	76.84747314
F277	L	0	2.891763687	-24.0721092	-0.01751491	0.042498037	-0.02835721	-30.9875755
F277	L	0.75	2.891763687	-22.6658592	-0.01751491	0.042498037	-0.01522104	-13.2850752
F277	L	1.5	2.891763687	-18.4471149	-0.01751491	0.042498037	-0.00208487	2.308053255
F277	L	2.25	2.891763687	-14.2283697	-0.01751491	0.042498037	0.011051301	14.3855648
F277	L	3	2.891763687	-12.8221207	-0.01751491	0.042498037	0.02418747	24.35370636
F277	EX	0	0.678080559	-0.29131451	0.009031381	-4.00413322	-0.01824385	-0.78599119
F277	EX	0.75	0.678080559	-0.29131451	0.009031381	-4.00413322	-0.02501738	-0.5675056
F277	EX	1.5	0.678080559	-0.29131451	0.009031381	-4.00413322	-0.0317909	-0.34901991
F277	EX	2.25	0.678080559	-0.29131451	0.009031381	-4.00413322	-0.03856443	-0.13053428
F277	EX	3	0.678080559	-0.29131451	0.009031381	-4.00413322	-0.04533796	0.087951384
F277	EY	0	-9.14562702	11.61713505	0.3152619	0.001695668	0.609295011	35.26891708
F277	EY	0.75	-9.14562702	11.61713505	0.3152619	0.001695668	0.372848898	26.55607414
F277	EY	1.5	-9.14562702	11.61713505	0.3152619	0.001695668	0.136402726	17.84323502
F277	EY	2.25	-9.14562702	11.61713505	0.3152619	0.001695668	-0.10004342	9.130392075
F277	EY	3	-9.14562702	11.61713505	0.3152619	0.001695668	-0.33648956	0.417551219
F277	COMB1	0	14.20946026	-134.446289	-0.09128735	-0.14839427	-0.14825264	-169.906754
F277	COMB1	0.75	14.20946026	-124.143555	-0.09128735	-0.14839427	-0.07978719	-72.0933304
F277	COMB1	1.5	14.20946026	-100.363335	-0.09128735	-0.14839427	-0.01132175	12.93899632
F277	COMB1	2.25	14.20946026	-76.5831146	-0.09128735	-0.14839427	0.057143681	78.45149231
F277	COMB1	3	14.20946026	-66.2803802	-0.09128735	-0.14839427	0.125609115	131.1829071
F277	COMB2	0	7.11665535	-88.1643753	0.04778222	-4.31969929	0.074092075	-104.750687
F277	COMB2	0.75	7.11665535	-80.6752625	0.04778222	-4.31969929	0.038255449	-40.8895645
F277	COMB2	1.5	7.11665535	-64.4449158	0.04778222	-4.31969929	0.002418823	14.07676697
F277	COMB2	2.25	7.11665535	-48.2145576	0.04778222	-4.31969929	-0.0334178	55.77769089
F277	COMB2	3	7.11665535	-40.725441	0.04778222	-4.31969929	-0.06925443	88.58382416
F277	COMB3	0	-0.09359853	-79.4160385	0.272997111	-1.4354769	0.535059512	-78.2621155
F277	COMB3	0.75	-0.09359853	-71.9269257	0.272997111	-1.4354769	0.330311894	-20.962244
F277	COMB3	1.5	-0.09359853	-55.6965714	0.272997111	-1.4354769	0.125564277	27.44283867
F277	COMB3	2.25	-0.09359853	-39.4662132	0.272997111	-1.4354769	-0.07918333	62.58251572
F277	COMB3	3	-0.09359853	-31.9771023	0.272997111	-1.4354769	-0.28393093	88.82740021
F278	D	0	7.93471384	-82.6475983	-0.14720955	1.617644072	-0.23588897	-104.88279
F278	D	0.75	7.93471384	-75.9369736	-0.14720955	1.617644072	-0.12548193	-44.946064
F278	D	1.5	7.93471384	-61.745121	-0.14720955	1.617644072	-0.0150749	7.15224123
F278	D	2.25	7.93471384	-47.5532684	-0.14720955	1.617644072	0.095332138	47.6715126
F278	D	3	7.93471384	-40.8426514	-0.14720955	1.617644072	0.205739185	80.35237122
F278	L	0	3.738844156	-34.7709656	-0.04896251	0.533497095	-0.07642024	-42.7790833
F278	L	0.75	3.738844156	-32.0990944	-0.04896251	0.533497095	-0.0396984	-17.3688583
F278	L	1.5	3.738844156	-24.083477	-0.04896251	0.533497095	-0.00297656	4.033564568
F278	L	2.25	3.738844156	-16.0678616	-0.04896251	0.533497095	0.033745278	18.75631523
F278	L	3	3.738844156	-13.3959894	-0.04896251	0.533497095	0.070467114	29.47126579
F278	EX	0	0.054723572	0.188732654	0.244250238	-4.23965931	0.389650226	-0.0507709
F278	EX	0.75	0.054723572	0.188732654	0.244250238	-4.23965931	0.206462741	-0.19232023
F278	EX	1.5	0.054723572	0.188732654	0.244250238	-4.23965931	0.02327528	-0.33386955
F278	EX	2.25	0.054723572	0.188732654	0.244250238	-4.23965931	-0.15991218	-0.4754189
F278	EX	3	0.054723572	0.188732654	0.244250238	-4.23965931	-0.34309962	-0.61696821
F278	EY	0	-8.75976372	13.03426075	0.475453556	0.002145724	0.904714942	39.55960846
F278	EY	0.75	-8.75976372	13.03426075	0.475453556	0.002145724	0.548125207	29.7839241
F278	EY	1.5	-8.75976372	13.03426075	0.475453556	0.002145724	0.191535458	20.00823975
F278	EY	2.25	-8.75976372	13.03426075	0.475453556	0.002145724	-0.16505428	10.23255634
F278	EY	3	-8.75976372	13.03426075	0.475453556	0.002145724	-0.521644	0.456872225
F278	COMB1	0	15.50380707	-154.810669	-0.2549915	2.794768095	-0.40533915	-194.305878
F278	COMB1	0.75	15.50380707	-142.482925	-0.2549915	2.794768095	-0.21409576	-81.7254486
F278	COMB1	1.5	15.50380707	-112.627708	-0.2549915	2.794768095	-0.02285237	15.03639221
F278	COMB1	2.25	15.50380707	-82.7724991	-0.2549915	2.794768095	0.168391004	87.21591949
F278	COMB1	3	15.50380707	-70.4447632	-0.2549915	2.794768095	0.359634399	143.5768738
F278	COMB2	0	6.806499004	-93.4317017	0.232573628	-2.52079368	0.416517407	-111.193611
F278	COMB2	0.75	6.806499004	-85.5439072	0.232573628	-2.52079368	0.242087349	-43.4816742
F278	COMB2	1.5	6.806499004	-68.1175461	0.232573628	-2.52079368	0.067657329	14.73746681
F278	COMB2	2.25	6.806499004	-50.6911774	0.232573628	-2.52079368	-0.10677271	58.69452667
F278	COMB2	3	6.806499004	-42.8033905	0.232573628	-2.52079368	-0.2812027	93.15879059
F278	COMB3	0	0.328671455	-83.9874115	0.406171829	0.533338189	0.800934732	-82.0807419
F278	COMB3	0.75	0.328671455	-76.099617	0.406171829	0.533338189	0.496306211	-21.4520168
F278	COMB3	1.5	0.328671455	-58.6732483	0.406171829	0.533338189	0.19167769	29.68390846
F278	COMB3	2.25	0.328671455	-41.2468834	0.406171829	0.533338189	-0.11295082	66.55775452
F278	COMB3	3	0.328671455	-33.3590927	0.406171829	0.533338189	-0.41757932	93.93881226
F279	D	0	5.988565922	-88.8979721	-0.23044625	-12.000824	-0.35397065	-99.3268204
F279	D	0.75	5.988565922	-74.6873627	-0.23044625	-12.000824	-0.18113615	-37.5148087
F279	D	1.5	5.988565922	-52.9955177	-0.23044625	-12.000824	-0.00830167	10.8337965
F279	D	2.25	5.988565922	-31.3036709	-0.23044625	-12.000824	0.16453281	41.9783783
F279	D	3	5.988565922	-17.0930614	-0.23044625	-12.000824	0.337367296	59.65955353
F279	L	0	2.849583626	-27.1034718	-0.08260722	-4.26575136	-0.12601094	-31.2873802
F279	L	0.75	2.849583626	-24.4316006	-0.08260722	-4.26575136	-0.06405558	-11.6277685
F279	L	1.5	2.849583626	-16.4159832	-0.08260722	-4.26575136	-0.00210024	4.024041653
F279	L	2.25	2.849583626	-8.40036869	-0.08260722	-4.26575136	0.059855111	12.99617958
F279	L	3	2.849583626	-5.72849655	-0.08260722	-4.26575136	0.121810459	17.96051407
F279	EX	0	0.408302873	-1.38271916	0.332756102	-3.4180057	0.52843672	-2.43879342
F279	EX	0.75	0.408302873	-1.38271916	0.332756102	-3.4180057	0.278869927	-1.40175521
F279	EX	1.5	0.408302873	-1.38271916	0.332756102	-3.4180057	0.029303137	-0.3647171

F284	L	1.25	0.154392615	-10.4028978	0.004078652	-0.00090937	0.005032687	1.805951834
F284	L	2.5	0.154392615	-1.18414783	0.004078652	-0.00090937	-6.5629E-05	9.132491112
F284	L	3.75	0.154392615	8.034602165	0.004078652	-0.00090937	-0.00516394	4.766321659
F284	L	5	0.154392615	11.94085312	0.004078652	-0.00090937	-0.01026226	-8.53214073
F284	EX	0	-0.69701856	2.324378252	0.018638676	-7.3452E-05	0.045981307	4.821632862
F284	EX	1.25	-0.69701856	2.324378252	0.018638676	-7.3452E-05	0.022682963	1.916159868
F284	EX	2.5	-0.69701856	2.324378252	0.018638676	-7.3452E-05	-0.00061538	-0.98931307
F284	EX	3.75	-0.69701856	2.324378252	0.018638676	-7.3452E-05	-0.02391373	-3.89478612
F284	EX	5	-0.69701856	2.324378252	0.018638676	-7.3452E-05	-0.04721208	-6.80025911
F284	EY	0	-0.00314334	-0.00040496	-0.14899877	0.012606674	-0.36938041	-0.00052962
F284	EY	1.25	-0.00314334	-0.00040496	-0.14899877	0.012606674	-0.18313195	-2.3413E-05
F284	EY	2.5	-0.00314334	-0.00040496	-0.14899877	0.012606674	0.00311652	0.000482792
F284	EY	3.75	-0.00314334	-0.00040496	-0.14899877	0.012606674	0.189364985	0.000988997
F284	EY	5	-0.00314334	-0.00040496	-0.14899877	0.012606674	0.375613481	0.001495201
F284	COMB1	0	0.748230219	-74.9760742	0.027609795	-0.00490074	0.068600841	-75.8797302
F284	COMB1	1.25	0.748230219	-53.5573235	0.027609795	-0.00490074	0.034088593	8.353381157
F284	COMB1	2.5	0.748230219	-6.68107986	0.027609795	-0.00490074	-0.00042365	46.40795898
F284	COMB1	3.75	0.748230219	40.19516373	0.027609795	-0.00490074	-0.0349359	25.05608177
F284	COMB1	5	0.748230219	61.61391068	0.027609795	-0.00490074	-0.06944814	-42.4743347
F284	COMB2	0	-0.2352189	-47.6730347	-0.00791035	0.000593599	-0.01973058	-45.7231712
F284	COMB2	1.25	-0.2352189	-33.1699104	-0.00791035	0.000593599	-0.00984264	7.332968235
F284	COMB2	2.5	-0.2352189	-2.15554047	-0.00791035	0.000593599	4.52922E-05	29.67442322
F284	COMB2	3.75	-0.2352189	28.85882759	-0.00791035	0.000593599	0.009933227	12.72181988
F284	COMB2	5	-0.2352189	43.36194992	-0.00791035	0.000593599	0.019821171	-34.9454689
F284	COMB3	0	0.264324129	-49.3468819	-0.1308443	0.00991239	-0.32433173	-49.1951332
F284	COMB3	1.25	0.264324129	-34.8437614	-0.1308443	0.00991239	-0.16077635	5.953316212
F284	COMB3	2.5	0.264324129	-3.82939053	-0.1308443	0.00991239	0.002779011	30.38708305
F284	COMB3	3.75	0.264324129	27.18497849	-0.1308443	0.00991239	0.166334376	15.52679253
F284	COMB3	5	0.264324129	41.68810272	-0.1308443	0.00991239	0.329889774	-30.0481815
F285	D	0	4.616208076	18.32541084	-0.1889468	-12.2238045	-0.2947416	53.39434433
F285	D	0.75	4.616208076	30.66569901	-0.1889468	-12.2238045	-0.15303177	35.25650406
F285	D	1.5	4.616208076	46.7466011	-0.1889468	-12.2238045	-0.01132196	6.460737705
F285	D	2.25	4.616208076	62.82750702	-0.1889468	-12.2238045	0.130387858	-34.8632584
F285	D	3	4.616208076	75.1678009	-0.1889468	-12.2238045	0.272097647	-86.8451843
F285	L	0	1.371364355	6.116612434	-0.07387621	-4.30953026	-0.11258288	11.25070095
F285	L	0.75	1.371364355	6.819736004	-0.07387621	-4.30953026	-0.05717582	6.487469673
F285	L	1.5	1.371364355	8.929106712	-0.07387621	-4.30953026	-0.00176877	0.669556081
F285	L	2.25	1.371364355	11.0384779	-0.07387621	-4.30953026	0.053638276	-6.90616322
F285	L	3	1.371364355	11.74160099	-0.07387621	-4.30953026	0.109045327	-15.5365648
F285	EX	0	-0.219255	-0.95311481	0.536175191	3.434410334	0.838834405	-1.7336334
F285	EX	0.75	-0.219255	-0.95311481	0.536175191	3.434410334	0.436703771	-1.01879871
F285	EX	1.5	-0.219255	-0.95311481	0.536175191	3.434410334	0.03457319	-0.30396405
F285	EX	2.25	-0.219255	-0.95311481	0.536175191	3.434410334	-0.36755738	0.410870612
F285	EX	3	-0.219255	-0.95311481	0.536175191	3.434410334	-0.76968801	1.125705242
F285	EY	0	-8.63689518	13.6465416	-0.16828555	0.001045304	-0.18622968	0.496589929
F285	EY	0.75	-8.63689518	13.6465416	-0.16828555	0.001045304	-0.06001577	-9.73829651
F285	EY	1.5	-8.63689518	13.6465416	-0.16828555	0.001045304	0.06619814	-19.9731827
F285	EY	2.25	-8.63689518	13.6465416	-0.16828555	0.001045304	0.192412049	-30.2080688
F285	EY	3	-8.63689518	13.6465416	-0.16828555	0.001045304	0.318625927	-40.442955
F285	COMB1	0	7.733633041	31.777071	-0.3449381	-21.5638142	-0.53382248	82.07434082
F285	COMB1	0.75	7.733633041	47.7104187	-0.3449381	-21.5638142	-0.27511942	52.68775558
F285	COMB1	1.5	7.733633041	70.38249207	-0.3449381	-21.5638142	-0.01641638	8.824174881
F285	COMB1	2.25	7.733633041	93.05457306	-0.3449381	-21.5638142	0.242286667	-52.8857727
F285	COMB1	3	7.733633041	108.9879227	-0.3449381	-21.5638142	0.500989735	-129.072723
F285	COMB2	0	2.331447363	24.48060036	0.280266225	-10.6375523	0.46458897	57.97014999
F285	COMB2	0.75	2.331447363	37.6593895	0.280266225	-10.6375523	0.254389703	34.94086075
F285	COMB2	1.5	2.331447363	55.20878601	0.280266225	-10.6375523	0.044190452	0.388529658
F285	COMB2	2.25	2.331447363	72.75819397	0.280266225	-10.6375523	-0.16600879	-47.8721542
F285	COMB2	3	2.331447363	85.9369812	0.280266225	-10.6375523	-0.37620807	-107.655891
F285	COMB3	0	-3.85880685	35.197052	-0.22946978	-13.10956	-0.2762506	59.58335876
F285	COMB3	0.75	-3.85880685	48.37583923	-0.22946978	-13.10956	-0.1041486	28.51674843
F285	COMB3	1.5	-3.85880685	65.92523956	-0.22946978	-13.10956	0.067953385	-14.0729055
F285	COMB3	2.25	-3.85880685	83.47463989	-0.22946978	-13.10956	0.240055382	-70.3709106
F285	COMB3	3	-3.85880685	96.65342712	-0.22946978	-13.10956	0.412157327	-138.191971
F286	D	0	7.865997791	42.28536606	-0.07312465	1.512571454	-0.12487909	80.179039
F286	D	0.75	7.865997791	48.99597549	-0.07312465	1.512571454	-0.07003571	46.41617966
F286	D	1.5	7.865997791	63.18782043	-0.07312465	1.512571454	-0.01519233	4.814916611
F286	D	2.25	7.865997791	77.37966919	-0.07312465	1.512571454	0.039651051	-48.3653603
F286	D	3	7.865997791	84.09027863	-0.07312465	1.512571454	0.094494432	-109.384048
F286	L	0	2.804733515	14.0100174	-0.03578385	0.398500443	-0.05580429	25.22384071
F286	L	0.75	2.804733515	15.41626549	-0.03578385	0.398500443	-0.02896646	14.36478806
F286	L	1.5	2.804733515	19.63500595	-0.03578385	0.398500443	-0.00212862	1.396368265
F286	L	2.25	2.804733515	23.85374832	-0.03578385	0.398500443	0.024709214	-15.0876617
F286	L	3	2.804733515	25.25999451	-0.03578385	0.398500443	0.051547047	-33.6810608
F286	EX	0	-0.1746877	0.641096771	0.206825078	4.255337715	0.331011295	0.635276973
F286	EX	0.75	-0.1746877	0.641096771	0.206825078	4.255337715	0.175892785	0.154455394
F286	EX	1.5	-0.1746877	0.641096771	0.206825078	4.255337715	0.020774296	-0.32636622
F286	EX	2.25	-0.1746877	0.641096771	0.206825078	4.255337715	-0.13434421	-0.80718786
F286	EX	3	-0.1746877	0.641096771	0.206825078	4.255337715	-0.28946269	-1.28800941
F286	EY	0	-8.63766193	13.03263569	-0.47693452	0.003307884	-0.52284783	0.472719193
F286	EY	0.75	-8.63766193	13.03263569	-0.47693452	0.003307884	-0.16514769	-9.30173779
F286	EY	1.5	-8.63766193	13.03263569	-0.47693452	0.003307884	0.192552462	-19.0761948
F286	EY	2.25	-8.63766193	13.03263569	-0.47693452	0.003307884	0.550252616	-28.8506508
F286	EY	3	-8.63766193	13.03263569	-0.47693452	0.003307884	0.907952845	-38.6251106

F286	COMB1	0	13.92677116	73.15846252	-0.14500375	2.452686548	-0.23914178	136.572998
F286	COMB1	0.75	13.92677116	83.4611969	-0.14500375	2.452686548	-0.13038918	78.68307495
F286	COMB1	1.5	13.92677116	107.241394	-0.14500375	2.452686548	-0.02163659	8.012089729
F286	COMB1	2.25	13.92677116	131.0215912	-0.14500375	2.452686548	0.087116003	-82.1786957
F286	COMB1	3	13.92677116	141.3243256	-0.14500375	2.452686548	0.195868596	-185.150558
F286	COMB2	0	6.241123676	53.581604	-0.02422322	6.119044304	0.029198216	92.93991852
F286	COMB2	0.75	6.241123676	61.07071304	-0.02422322	6.119044304	0.047365583	50.49171066
F286	COMB2	1.5	6.241123676	77.30105591	-0.02422322	6.119044304	0.06553296	-0.85127163
F286	COMB2	2.25	6.241123676	93.53139496	-0.02422322	6.119044304	0.083700344	-65.4596405
F286	COMB2	3	6.241123676	101.0205078	-0.02422322	6.119044304	0.10186775	-138.962784
F286	COMB3	0	0.018217295	62.69900131	-0.52368414	3.057632446	-0.59342307	92.82997131
F286	COMB3	0.75	0.018217295	70.18811035	-0.52368414	3.057632446	-0.20066078	43.54372787
F286	COMB3	1.5	0.018217295	86.4184494	-0.52368414	3.057632446	0.192101538	-14.637291
F286	COMB3	2.25	0.018217295	102.6487961	-0.52368414	3.057632446	0.584863842	-86.0836945
F286	COMB3	3	0.018217295	110.1379089	-0.52368414	3.057632446	0.977626264	-166.424866
F287	D	0	8.001561165	40.27889633	-0.01872701	-0.13286254	-0.03348872	76.90354156
F287	D	0.75	8.001561165	46.9895134	-0.01872701	-0.13286254	-0.01944349	44.64552689
F287	D	1.5	8.001561165	61.18135452	-0.01872701	-0.13286254	-0.00539827	4.549110413
F287	D	2.25	8.001561165	75.37319183	-0.01872701	-0.13286254	0.00864696	-47.1263199
F287	D	3	8.001561165	82.0838089	-0.01872701	-0.13286254	0.022692187	-106.64016
F287	L	0	2.837375164	13.37626648	-0.01213673	-0.0177188	-0.01821554	24.21283722
F287	L	0.75	2.837375164	14.78251362	-0.01213673	-0.0177188	-0.00911301	13.82909584
F287	L	1.5	2.837375164	19.00125504	-0.01213673	-0.0177188	-1.0484E-05	1.335988402
F287	L	2.25	2.837375164	23.21999741	-0.01213673	-0.0177188	0.009092044	-14.6727304
F287	L	3	2.837375164	24.6262455	-0.01213673	-0.0177188	0.018194573	-32.7908134
F287	EX	0	-0.61634517	0.166469082	-0.16121802	3.989002228	-0.16397044	-0.0729625
F287	EX	0.75	-0.61634517	0.166469082	-0.16121802	3.989002228	-0.04305716	-0.19781405
F287	EX	1.5	-0.61634517	0.166469082	-0.16121802	3.989002228	0.077856109	-0.3226656
F287	EX	2.25	-0.61634517	0.166469082	-0.16121802	3.989002228	0.198769391	-0.44751716
F287	EX	3	-0.61634517	0.166469082	-0.16121802	3.989002228	0.319682658	-0.57236868
F287	EY	0	-9.41640663	11.6191597	-0.31788191	0.002525937	-0.33887541	0.389100999
F287	EY	0.75	-9.41640663	11.6191597	-0.31788191	0.002525937	-0.10046446	-8.32525158
F287	EY	1.5	-9.41640663	11.6191597	-0.31788191	0.002525937	0.137946516	-17.0396042
F287	EY	2.25	-9.41640663	11.6191597	-0.31788191	0.002525937	0.376357466	-25.7539558
F287	EY	3	-9.41640663	11.6191597	-0.31788191	0.002525937	0.614768445	-34.4683075
F287	COMB1	0	14.14167309	69.73670197	-0.04189117	-0.18778512	-0.06933133	131.0247955
F287	COMB1	0.75	14.14167309	80.03943634	-0.04189117	-0.18778512	-0.03791301	75.70118713
F287	COMB1	1.5	14.14167309	103.8196335	-0.04189117	-0.18778512	-0.00649469	7.596513748
F287	COMB1	2.25	14.14167309	127.5998306	-0.04189117	-0.18778512	0.024923624	-80.0279541
F287	COMB1	3	14.14167309	137.9025574	-0.04189117	-0.18778512	0.056341939	-180.433487
F287	COMB2	0	5.691326618	50.33869553	-0.29047987	3.984325886	-0.31735623	88.42281342
F287	COMB2	0.75	5.691326618	57.82780838	-0.29047987	3.984325886	-0.09949673	48.40677643
F287	COMB2	1.5	5.691326618	74.05814362	-0.29047987	3.984325886	0.118362747	-0.50403184
F287	COMB2	2.25	5.691326618	90.28848267	-0.29047987	3.984325886	0.336222231	-62.6802254
F287	COMB2	3	5.691326618	97.77759552	-0.29047987	3.984325886	0.554081678	-133.75119
F287	COMB3	0	-0.78596407	58.75892258	-0.4080461	1.114100814	-0.44837093	88.76133728
F287	COMB3	0.75	-0.78596407	66.24803162	-0.4080461	1.114100814	-0.14233695	42.43014526
F287	COMB3	1.5	-0.78596407	82.47837067	-0.4080461	1.114100814	0.163697034	-12.7958212
F287	COMB3	2.25	-0.78596407	98.70870972	-0.4080461	1.114100814	0.469731003	-81.2871704
F287	COMB3	3	-0.78596407	106.1978226	-0.4080461	1.114100814	0.775765002	-158.673294
F288	D	0	7.999634743	40.24484253	0.015694158	0.182490289	0.03212719	76.8533783
F288	D	0.75	7.999634743	46.95545197	0.015694158	0.182490289	0.020356594	44.62091064
F288	D	1.5	7.999634743	61.14729691	0.015694158	0.182490289	0.008585998	4.550038815
F288	D	2.25	7.999634743	75.33914185	0.015694158	0.182490289	-0.0031846	-47.0998497
F288	D	3	7.999634743	82.04975128	0.015694158	0.182490289	-0.01495519	-106.588142
F288	L	0	2.893064737	13.48203373	0.009827835	-0.04136682	0.016704122	24.35475731
F288	L	0.75	2.893064737	14.88828087	0.009827835	-0.04136682	0.009333259	13.89169121
F288	L	1.5	2.893064737	19.10702324	0.009827835	-0.04136682	0.001962398	1.319258094
F288	L	2.25	2.893064737	23.3257637	0.009827835	-0.04136682	-0.00540846	-14.7687855
F288	L	3	2.893064737	24.73200989	0.009827835	-0.04136682	-0.01277933	-32.9661942
F288	EX	0	0.562552989	-0.16530286	-0.32302126	3.977380514	-0.40632442	0.079001509
F288	EX	0.75	0.562552989	-0.16530286	-0.32302126	3.977380514	-0.16405897	0.202978402
F288	EX	1.5	0.562552989	-0.16530286	-0.32302126	3.977380514	0.078206472	0.326955318
F288	EX	2.25	0.562552989	-0.16530286	-0.32302126	3.977380514	0.320471883	0.450932205
F288	EX	3	0.562552989	-0.16530286	-0.32302126	3.977380514	0.562737346	0.574909091
F288	EY	0	-9.41669464	11.61915588	0.317901999	-0.00252606	0.338897347	0.389097422
F288	EY	0.75	-9.41669464	11.61915588	0.317901999	-0.00252606	0.10047134	-8.32525158
F288	EY	1.5	-9.41669464	11.61915588	0.317901999	-0.00252606	-0.13795467	-17.0396004
F288	EY	2.25	-9.41669464	11.61915588	0.317901999	-0.00252606	-0.37638071	-25.7539482
F288	EY	3	-9.41669464	11.61915588	0.317901999	-0.00252606	-0.61480671	-34.4682999
F288	COMB1	0	14.22846508	69.86506653	0.034557525	0.152801439	0.065279223	131.1916656
F288	COMB1	0.75	14.22846508	80.16779327	0.034557525	0.152801439	0.039361127	75.77179718
F288	COMB1	1.5	14.22846508	103.9479904	0.034557525	0.152801439	0.013443035	7.570859432
F288	COMB1	2.25	14.22846508	127.7281876	0.034557525	0.152801439	-0.01247506	-80.1498718
F288	COMB1	3	14.22846508	138.0309143	0.034557525	0.152801439	-0.03839315	-180.651688
F288	COMB2	0	6.926915646	49.99287033	-0.21461323	4.294377327	-0.27479777	88.5721283
F288	COMB2	0.75	6.926915646	57.48197937	-0.21461323	4.294377327	-0.11383817	48.81546783
F288	COMB2	1.5	6.926915646	73.71231842	-0.21461323	4.294377327	0.047121428	0.164031684
F288	COMB2	2.25	6.926915646	89.94265747	-0.21461323	4.294377327	0.208080992	-61.7527847
F288	COMB2	3	6.926915646	97.43177032	-0.21461323	4.294377327	0.369040608	-132.564377
F288	COMB3	0	-0.39939299	58.65196609	0.251620024	1.428806782	0.266845375	88.80123138
F288	COMB3	0.75	-0.39939299	66.14107513	0.251620024	1.428806782	0.078130729	42.55026627
F288	COMB3	1.5	-0.39939299	82.37141418	0.251620024	1.428806782	-0.11058392	-12.5954819
F288	COMB3	2.25	-0.39939299	98.60175323	0.251620024	1.428806782	-0.29929858	-81.0066071

F288	COMB3	3	-0.39939299	106.0908661	0.251620024	1.428806782	-0.48801321	-158.312515
F289	D	0	7.937129021	42.41419601	0.071752764	-1.63425565	0.124339208	80.34932709
F289	D	0.75	7.937129021	49.12480545	0.071752764	-1.63425565	0.070524737	46.48984909
F289	D	1.5	7.937129021	63.31665039	0.071752764	-1.63425565	0.016710272	4.791963577
F289	D	2.25	7.937129021	77.50849152	0.071752764	-1.63425565	-0.0371042	-48.4849358
F289	D	3	7.937129021	84.21910858	0.071752764	-1.63425565	-0.09091867	-109.600235
F289	L	0	3.740780354	14.02671528	0.03436546	-0.5385164	0.055036593	29.47113037
F289	L	0.75	3.740780354	16.69858551	0.03436546	-0.5385164	0.029262548	18.28314972
F289	L	1.5	3.740780354	24.71419525	0.03436546	-0.5385164	0.003488505	3.087371588
F289	L	2.25	3.740780354	32.72980499	0.03436546	-0.5385164	-0.02228554	-18.7880669
F289	L	3	3.740780354	35.40167236	0.03436546	-0.5385164	-0.04805958	-44.6713066
F289	EX	0	0.058722474	-0.62889326	-0.29972854	4.213831902	-0.42676926	-0.61689198
F289	EX	0.75	0.058722474	-0.62889326	-0.29972854	4.213831902	-0.2019733	-0.14522302
F289	EX	1.5	0.058722474	-0.62889326	-0.29972854	4.213831902	0.022822646	0.326445967
F289	EX	2.25	0.058722474	-0.62889326	-0.29972854	4.213831902	0.247618601	0.798114955
F289	EX	3	0.058722474	-0.62889326	-0.29972854	4.213831902	0.472414523	1.269783974
F289	EY	0	-8.63768196	13.03264618	0.476920962	-0.00330828	0.522833765	0.472719252
F289	EY	0.75	-8.63768196	13.03264618	0.476920962	-0.00330828	0.165143713	-9.30174541
F289	EY	1.5	-8.63768196	13.03264618	0.476920962	-0.00330828	-0.19254631	-19.07621
F289	EY	2.25	-8.63768196	13.03264618	0.476920962	-0.00330828	-0.55023628	-28.8506756
F289	EY	3	-8.63768196	13.03264618	0.476920962	-0.00330828	-0.90792638	-38.6251411
F289	COMB1	0	15.50980282	73.33977509	0.141088054	-2.82273316	0.237265602	143.572998
F289	COMB1	0.75	15.50980282	85.66750336	0.141088054	-2.82273316	0.131449759	85.04085541
F289	COMB1	1.5	15.50980282	115.5226898	0.141088054	-2.82273316	0.025633935	10.69015121
F289	COMB1	2.25	15.50980282	145.3778839	0.141088054	-2.82273316	-0.0801819	-88.2428284
F289	COMB1	3	15.50980282	157.7055969	0.141088054	-2.82273316	-0.18599772	-202.99437
F289	COMB2	0	6.852239132	52.40769958	-0.07382341	2.474672794	-0.12912087	93.16062164
F289	COMB2	0.75	6.852239132	60.29547882	-0.07382341	2.474672794	-0.07375342	51.49317551
F289	COMB2	1.5	6.852239132	77.72183228	-0.07382341	2.474672794	-0.01838598	0.33294943
F289	COMB2	2.25	6.852239132	95.14818573	-0.07382341	2.474672794	0.036981467	-65.0893402
F289	COMB2	3	6.852239132	103.035965	-0.07382341	2.474672794	0.092348866	-140.00441
F289	COMB3	0	0.461262524	62.43949509	0.492518038	-0.56171781	0.562435806	93.95223999
F289	COMB3	0.75	0.461262524	70.32727814	0.492518038	-0.56171781	0.193047985	44.76095581
F289	COMB3	1.5	0.461262524	87.75363159	0.492518038	-0.56171781	-0.17633982	-13.9231062
F289	COMB3	2.25	0.461262524	105.179985	0.492518038	-0.56171781	-0.54572761	-86.8692245
F289	COMB3	3	0.461262524	113.0677643	0.492518038	-0.56171781	-0.91511548	-169.308121
F290	D	0	5.970995903	18.33072662	0.187222123	12.01826763	0.29317686	59.65668488
F290	D	0.75	5.970995903	32.54132462	0.187222123	12.01826763	0.152760521	41.04727554
F290	D	1.5	5.970995903	54.2331543	0.187222123	12.01826763	0.012344213	8.974491119
F290	D	2.25	5.970995903	75.92498016	0.187222123	12.01826763	-0.1280721	-40.3022881
F290	D	3	5.970995903	90.13558197	0.187222123	12.01826763	-0.26848841	-103.04245
F290	L	0	2.845504999	6.212356091	0.071785398	4.26638937	0.111548193	17.95960617
F290	L	0.75	2.845504999	8.884225845	0.071785398	4.26638937	0.057709254	12.63238144
F290	L	1.5	2.845504999	16.89983559	0.071785398	4.26638937	0.003870315	3.29736042
F290	L	2.25	2.845504999	24.91544342	0.071785398	4.26638937	-0.04996862	-12.7173204
F290	L	3	2.845504999	27.5873127	0.071785398	4.26638937	-0.10380757	-32.7397995
F290	EX	0	0.389664173	0.941659093	-0.36426246	3.382252932	-0.51704252	1.709285855
F290	EX	0.75	0.389664173	0.941659093	-0.36426246	3.382252932	-0.24384622	1.003042936
F290	EX	1.5	0.389664173	0.941659093	-0.36426246	3.382252932	0.029350065	0.296800017
F290	EX	2.25	0.389664173	0.941659093	-0.36426246	3.382252932	0.302546352	-0.4094429
F290	EX	3	0.389664173	0.941659093	-0.36426246	3.382252932	0.575742662	-1.11568582
F290	EY	0	-8.63689423	13.64654922	0.168281823	-0.00104561	0.186225176	0.496590197
F290	EY	0.75	-8.63689423	13.64654922	0.168281823	-0.00104561	0.06001405	-9.73830128
F290	EY	1.5	-8.63689423	13.64654922	0.168281823	-0.00104561	-0.06619707	-19.9731941
F290	EY	2.25	-8.63689423	13.64654922	0.168281823	-0.00104561	-0.19240817	-30.2080841
F290	EY	3	-8.63689423	13.64654922	0.168281823	-0.00104561	-0.31861928	-40.4429779
F290	COMB1	0	11.71800327	31.9366436	0.339523196	21.24814415	0.530289352	100.3233871
F290	COMB1	0.75	11.71800327	53.26435089	0.339523196	21.24814415	0.275647432	69.46854401
F290	COMB1	1.5	11.71800327	92.11952209	0.339523196	21.24814415	0.02100556	16.04516602
F290	COMB1	2.25	11.71800327	130.9746857	0.339523196	21.24814415	-0.23363632	-68.7104645
F290	COMB1	3	11.71800327	152.3023987	0.339523196	21.24814415	-0.48827821	-176.034622
F290	COMB2	0	4.84856081	26.47743607	-0.10480724	17.46339607	-0.13350469	70.22232819
F290	COMB2	0.75	4.84856081	42.24020004	-0.10480724	17.46339607	-0.05489945	45.04942322
F290	COMB2	1.5	4.84856081	67.54154205	-0.10480724	17.46339607	0.023705816	4.477515697
F290	COMB2	2.25	4.84856081	92.84287262	-0.10480724	17.46339607	0.102311075	-56.2626801
F290	COMB2	3	4.84856081	108.6056442	-0.10480724	17.46339607	0.180916339	-132.401886
F290	COMB3	0	-1.78011465	35.82965469	0.281148881	15.02740479	0.375641406	69.35663605
F290	COMB3	0.75	-1.78011465	51.59241867	0.281148881	15.02740479	0.164780155	37.16958237
F290	COMB3	1.5	-1.78011465	76.89376068	0.281148881	15.02740479	-0.04608107	-10.4164782
F290	COMB3	2.25	-1.78011465	102.1950912	0.281148881	15.02740479	-0.2569423	-78.1708221
F290	COMB3	3	-1.78011465	117.9578629	0.281148881	15.02740479	-0.46780354	-161.324173
F291	D	0	5.997102261	-39.4743996	-0.03758442	-0.08064032	-0.09647187	-27.8342628
F291	D	1.25	5.997102261	-25.0337772	-0.03758442	-0.08064032	-0.04949133	14.64806271
F291	D	2.5	5.997102261	3.538092852	-0.03758442	-0.08064032	-0.0025108	28.30799675
F291	D	3.75	5.997102261	32.10996246	-0.03758442	-0.08064032	0.044469737	5.802830696
F291	D	5	5.997102261	46.55058289	-0.03758442	-0.08064032	0.091450274	-45.5247269
F291	L	0	2.127686501	-12.1543951	-0.00878696	-0.03908522	-0.02225482	-9.02408791
F291	L	1.25	2.127686501	-8.2481451	-0.00878696	-0.03908522	-0.01127112	4.54130125
F291	L	2.5	2.127686501	0.970605373	-0.00878696	-0.03908522	-0.00028742	9.174399376
F291	L	3.75	2.127686501	10.1893549	-0.00878696	-0.03908522	0.010696285	2.114788294
F291	L	5	2.127686501	14.09560585	-0.00878696	-0.03908522	0.021679988	-13.8771152
F291	EX	0	-19.115984	19.41924477	0.01949431	-0.00349988	0.04423891	51.74858856
F291	EX	1.25	-19.115984	19.41924477	0.01949431	-0.00349988	0.019871024	27.47452736
F291	EX	2.5	-19.115984	19.41924477	0.01949431	-0.00349988	-0.00449686	3.20047164

F291	EX	3.75	-19.115984	19.41924477	0.01949431	-0.00349988	-0.02886475	-21.0735855
F291	EX	5	-19.115984	19.41924477	0.01949431	-0.00349988	-0.05323264	-45.347641
F291	EY	0	0.006684722	0.000610364	0.234170407	0.079636104	0.65553242	0.001015626
F291	EY	1.25	0.006684722	0.000610364	0.234170407	0.079636104	0.362819403	0.000252671
F291	EY	2.5	0.006684722	0.000610364	0.234170407	0.079636104	0.070106365	-0.00051028
F291	EY	3.75	0.006684722	0.000610364	0.234170407	0.079636104	-0.22260666	-0.00127324
F291	EY	5	0.006684722	0.000610364	0.234170407	0.079636104	-0.51531971	-0.00203619
F291	COMB1	0	10.6008215	-66.8163071	-0.05916045	-0.15930474	-0.15137395	-47.8396568
F291	COMB1	1.25	10.6008215	-43.2375641	-0.05916045	-0.15930474	-0.07742339	24.84375763
F291	COMB1	2.5	10.6008215	5.798679829	-0.05916045	-0.15930474	-0.00347282	48.64863586
F291	COMB1	3.75	10.6008215	54.83492279	-0.05916045	-0.15930474	0.070477739	10.3470583
F291	COMB1	5	10.6008215	78.4136734	-0.05916045	-0.15930474	0.144428313	-76.8330612
F291	COMB2	0	-12.8157597	-25.1776409	0.05170875	-0.07552118	0.143974259	21.49154472
F291	COMB2	1.25	-12.8157597	-8.7845211	0.05170875	-0.07552118	0.07933832	45.24719238
F291	COMB2	2.5	-12.8157597	24.11985016	0.05170875	-0.07552118	0.014702379	35.92565918
F291	COMB2	3.75	-12.8157597	57.02421951	0.05170875	-0.07552118	-0.04993356	-15.0524321
F291	COMB2	5	-12.8157597	73.41734314	0.05170875	-0.07552118	-0.1145695	-99.1077042
F291	COMB3	0	0.952662528	-39.15905	0.209788099	-0.01446873	0.593938589	-15.7666922
F291	COMB3	1.25	0.952662528	-22.7659302	0.209788099	-0.01446873	0.331703424	25.46571732
F291	COMB3	2.5	0.952662528	10.13844109	0.209788099	-0.01446873	0.069468305	33.62094498
F291	COMB3	3.75	0.952662528	43.04280853	0.209788099	-0.01446873	-0.19276683	0.119614005
F291	COMB3	5	0.952662528	59.43593216	0.209788099	-0.01446873	-0.45500198	-66.4589005
F292	D	0	5.062219143	-43.0058746	-0.02352888	-0.0167323	-0.05352672	-42.4968262
F292	D	1.25	5.062219143	-28.5652542	-0.02352888	-0.0167323	-0.02411562	4.39984417
F292	D	2.5	5.062219143	0.006617815	-0.02352888	-0.0167323	0.005295474	22.47412109
F292	D	3.75	5.062219143	28.5784893	-0.02352888	-0.0167323	0.03470657	4.383299828
F292	D	5	5.062219143	43.01910782	-0.02352888	-0.0167323	0.06411767	-42.5299149
F292	L	0	1.90413177	-13.1457319	-0.00437628	-0.00257711	-0.00972491	-13.4144144
F292	L	1.25	1.90413177	-9.23948193	-0.00437628	-0.00257711	-0.00425457	1.39014709
F292	L	2.5	1.90413177	-0.02073167	-0.00437628	-0.00257711	0.001215775	7.262416363
F292	L	3.75	1.90413177	9.198019028	-0.00437628	-0.00257711	0.006686119	1.441976309
F292	L	5	1.90413177	13.10426807	-0.00437628	-0.00257711	0.012156463	-13.3107557
F292	EX	0	-14.8490295	16.50561523	-0.01767635	0.0003169	-0.01360799	41.01521301
F292	EX	1.25	-14.8490295	16.50561523	-0.01767635	0.0003169	0.008487442	20.38319397
F292	EX	2.5	-14.8490295	16.50561523	-0.01767635	0.0003169	0.030582875	-0.24882568
F292	EX	3.75	-14.8490295	16.50561523	-0.01767635	0.0003169	0.052678309	-20.8808441
F292	EX	5	-14.8490295	16.50561523	-0.01767635	0.0003169	0.074773744	-41.5128632
F292	EY	0	-0.01262754	-6.1551E-05	0.509106517	0.181333259	1.239210129	0.000191509
F292	EY	1.25	-0.01262754	-6.1551E-05	0.509106517	0.181333259	0.602826834	0.000268448
F292	EY	2.5	-0.01262754	-6.1551E-05	0.509106517	0.181333259	-0.03355632	0.000345387
F292	EY	3.75	-0.01262754	-6.1551E-05	0.509106517	0.181333259	-0.66993952	0.000422326
F292	EY	5	-0.01262754	-6.1551E-05	0.509106517	0.181333259	-1.30632281	0.000499265
F292	COMB1	0	9.121273994	-72.6402206	-0.03523669	-0.02420214	-0.07979193	-72.4592514
F292	COMB1	1.25	9.121273994	-49.0614738	-0.03523669	-0.02420214	-0.03574606	7.504048347
F292	COMB1	2.5	9.121273994	-0.02522929	-0.03523669	-0.02420214	0.008299808	38.58880997
F292	COMB1	3.75	9.121273994	49.01101685	-0.03523669	-0.02420214	0.052345674	7.567121506
F292	COMB1	5	9.121273994	72.58975983	-0.03523669	-0.02420214	0.096391544	-72.333107
F292	COMB2	0	-9.45759201	-32.2137833	0.115989693	0.039067261	0.317000508	-6.39640141
F292	COMB2	1.25	-9.45759201	-15.8206606	0.115989693	0.039067261	0.172013372	26.15442276
F292	COMB2	2.5	-9.45759201	17.08370972	0.115989693	0.039067261	0.027026253	25.6280632
F292	COMB2	3.75	-9.45759201	49.98807907	0.115989693	0.039067261	-0.11796087	-16.5548553
F292	COMB2	5	-9.45759201	66.3812027	0.115989693	0.039067261	-0.26294801	-91.8149567
F292	COMB3	0	1.224428535	-44.0978699	0.502909958	0.172119036	1.237617731	-35.9272156
F292	COMB3	1.25	1.224428535	-27.7047482	0.502909958	0.172119036	0.608980179	11.47872066
F292	COMB3	2.5	1.224428535	5.199622154	0.502909958	0.172119036	-0.01965731	25.80747223
F292	COMB3	3.75	1.224428535	38.10399246	0.502909958	0.172119036	-0.64829481	-1.52033556
F292	COMB3	5	1.224428535	54.49711227	0.502909958	0.172119036	-1.27693236	-61.9253235
F293	D	0	4.767564774	-42.9514465	0.000865837	8.79838E-05	0.009987115	-41.7517471
F293	D	1.25	4.767564774	-28.5108223	0.000865837	8.79838E-05	0.008904819	5.076885223
F293	D	2.5	4.767564774	0.061047424	0.000865837	8.79838E-05	0.007822523	23.08312607
F293	D	3.75	4.767564774	28.6329174	0.000865837	8.79838E-05	0.006740227	4.924266338
F293	D	5	4.767564774	43.07353973	0.000865837	8.79838E-05	0.005657931	-42.0569839
F293	L	0	1.817257524	-13.0200157	0.000939345	-0.00217629	0.003403237	-12.999054
F293	L	1.25	1.817257524	-9.11376572	0.000939345	-0.00217629	0.002229055	1.648361087
F293	L	2.5	1.817257524	0.104984857	0.000939345	-0.00217629	0.001054873	7.363484859
F293	L	3.75	1.817257524	9.323735237	0.000939345	-0.00217629	-0.00011931	1.385899067
F293	L	5	1.817257524	13.22998524	0.000939345	-0.00217629	-0.00129349	-13.5239792
F293	EX	0	-11.0475245	16.69343758	0.243274748	0.058235586	0.608209848	41.75557327
F293	EX	1.25	-11.0475245	16.69343758	0.243274748	0.058235586	0.304116458	20.88877296
F293	EX	2.5	-11.0475245	16.69343758	0.243274748	0.058235586	2.30114E-05	0.021977197
F293	EX	3.75	-11.0475245	16.69343758	0.243274748	0.058235586	-0.30407044	-20.84482
F293	EX	5	-11.0475245	16.69343758	0.243274748	0.058235586	-0.60816389	-41.7116165
F293	EY	0	-0.03435865	-3.5855E-07	-2.8168E-05	1.21049E-07	-0.14834389	0.001645771
F293	EY	1.25	-0.03435865	-3.5855E-07	-2.8168E-05	1.21049E-07	-0.14830868	0.00164622
F293	EY	2.5	-0.03435865	-3.5855E-07	-2.8168E-05	1.21049E-07	-0.14827347	0.001646668
F293	EY	3.75	-0.03435865	-3.5855E-07	-2.8168E-05	1.21049E-07	-0.14823826	0.001647116
F293	EY	5	-0.03435865	-3.5855E-07	-2.8168E-05	1.21049E-07	-0.14820305	0.001647564
F293	COMB1	0	8.628689766	-72.373764	0.002541957	-0.00337649	0.017429717	-70.9005814
F293	COMB1	1.25	8.628689766	-48.7950096	0.002541957	-0.00337649	0.014252272	8.729640007
F293	COMB1	2.5	8.628689766	0.241232678	0.002541957	-0.00337649	0.011074824	39.48132706
F293	COMB1	3.75	8.628689766	49.27747726	0.002541957	-0.00337649	0.007897379	8.126558304
F293	COMB1	5	8.628689766	72.85622406	0.002541957	-0.00337649	0.004719933	-72.1067505
F293	COMB2	0	-5.86663151	-31.922617	0.252985507	0.059680719	0.59432739	-4.71649885
F293	COMB2	1.25	-5.86663151	-15.5294924	0.252985507	0.059680719	0.278095514	27.47036171

F293	COMB2	2.5	-5.86663151	17.37487793	0.252985507	0.059680719	-0.03813639	26.58004379
F293	COMB2	3.75	-5.86663151	50.27924728	0.252985507	0.059680719	-0.3543683	-15.9668322
F293	COMB2	5	-5.86663151	66.67237091	0.252985507	0.059680719	-0.67060018	-91.5908966
F293	COMB3	0	2.062332153	-43.9418907	0.077806994	0.017751187	0.047383517	-34.7793007
F293	COMB3	1.25	2.062332153	-27.5487671	0.077806994	0.017751187	-0.04987522	12.43165493
F293	COMB3	2.5	2.062332153	5.355602264	0.077806994	0.017751187	-0.14713396	26.56543159
F293	COMB3	3.75	2.062332153	38.25997162	0.077806994	0.017751187	-0.24439269	-0.95735079
F293	COMB3	5	2.062332153	54.65309525	0.077806994	0.017751187	-0.34165144	-61.5573196
F294	D	0	4.933835506	-42.8248062	0.024521559	0.013772899	0.065673269	-42.134613
F294	D	1.25	4.933835506	-28.3841839	0.024521559	0.013772899	0.035021313	4.535717964
F294	D	2.5	4.933835506	0.187687248	0.024521559	0.013772899	0.004369361	22.38365746
F294	D	3.75	4.933835506	28.75955582	0.024521559	0.013772899	-0.02628259	4.06649971
F294	D	5	4.933835506	43.20018005	0.024521559	0.013772899	-0.05693454	-43.0730476
F294	L	0	1.878672719	-13.2366409	0.000877586	-0.02037758	0.003090121	-13.6809149
F294	L	1.25	1.878672719	-9.33038998	0.000877586	-0.02037758	0.001993138	1.237282038
F294	L	2.5	1.878672719	-0.11163985	0.000877586	-0.02037758	0.000896156	7.223186493
F294	L	3.75	1.878672719	9.107110023	0.000877586	-0.02037758	-0.00020083	1.516381621
F294	L	5	1.878672719	13.01336098	0.000877586	-0.02037758	-0.00129781	-13.122715
F294	EX	0	-7.62126827	16.40601921	-0.02015613	-5.8743E-05	-0.08040104	41.30424881
F294	EX	1.25	-7.62126827	16.40601921	-0.02015613	-5.8743E-05	-0.05520588	20.79672432
F294	EX	2.5	-7.62126827	16.40601921	-0.02015613	-5.8743E-05	-0.03001072	0.289198905
F294	EX	3.75	-7.62126827	16.40601921	-0.02015613	-5.8743E-05	-0.00481555	-20.2183266
F294	EX	5	-7.62126827	16.40601921	-0.02015613	-5.8743E-05	0.020379608	-40.725853
F294	EY	0	-0.01262604	6.08934E-05	-0.50908512	-0.18133476	-1.3062613	0.00049759
F294	EY	1.25	-0.01262604	6.08934E-05	-0.50908512	-0.18133476	-0.66990501	0.000421473
F294	EY	2.5	-0.01262604	6.08934E-05	-0.50908512	-0.18133476	-0.03354854	0.000345356
F294	EY	3.75	-0.01262604	6.08934E-05	-0.50908512	-0.18133476	0.602807879	0.00026924
F294	EY	5	-0.01262604	6.08934E-05	-0.50908512	-0.18133476	1.239164352	0.000193123
F294	COMB1	0	8.926478386	-72.5683899	0.030830009	-0.01607664	0.083752111	-72.451004
F294	COMB1	1.25	8.926478386	-48.9896431	0.030830009	-0.01607664	0.045214597	7.422512531
F294	COMB1	2.5	8.926478386	0.04660093	0.030830009	-0.01607664	0.006677082	38.4174881
F294	COMB1	3.75	8.926478386	49.08284378	0.030830009	-0.01607664	-0.03186043	7.306010246
F294	COMB1	5	8.926478386	72.66159821	0.030830009	-0.01607664	-0.07039794	-72.6840057
F294	COMB2	0	-2.11968064	-32.1553383	-0.15519933	-0.04913864	-0.42475709	-5.8007803
F294	COMB2	1.25	-2.11968064	-15.7622156	-0.15519933	-0.04913864	-0.23075794	26.6769886
F294	COMB2	2.5	-2.11968064	17.14215469	-0.15519933	-0.04913864	-0.03675877	26.07757378
F294	COMB2	3.75	-2.11968064	50.04652405	-0.15519933	-0.04913864	0.157240406	-16.1783981
F294	COMB2	5	-2.11968064	66.43965149	-0.15519933	-0.04913864	0.351239562	-91.5115509
F294	COMB3	0	3.358352184	-43.9676285	-0.5148645	-0.1823774	-1.32697046	-35.5394745
F294	COMB3	1.25	3.358352184	-27.5745049	-0.5148645	-0.1823774	-0.68338984	11.7036581
F294	COMB3	2.5	3.358352184	5.329864979	-0.5148645	-0.1823774	-0.03980923	25.86960411
F294	COMB3	3.75	3.358352184	38.23423386	-0.5148645	-0.1823774	0.603771389	-1.6210053
F294	COMB3	5	3.358352184	54.62735748	-0.5148645	-0.1823774	1.247352004	-62.188797
F295	D	0	5.893144608	-46.7916031	0.03189728	0.048238277	0.076911598	-46.1789017
F295	D	1.25	5.893144608	-32.3509827	0.03189728	0.048238277	0.037039991	5.449930668
F295	D	2.5	5.893144608	-3.77911162	0.03189728	0.048238277	-0.00283161	28.25636864
F295	D	3.75	5.893144608	24.79275703	0.03189728	0.048238277	-0.04270321	14.89770985
F295	D	5	5.893144608	39.23337936	0.03189728	0.048238277	-0.08257481	-27.2833424
F295	L	0	2.14163065	-14.0584288	0.007813752	0.024904719	0.019551704	-13.7489452
F295	L	1.25	2.14163065	-10.1521788	0.007813752	0.024904719	0.009784514	2.196487904
F295	L	2.5	2.14163065	-0.93342882	0.007813752	0.024904719	1.73239E-05	9.209628105
F295	L	3.75	2.14163065	8.285321236	0.007813752	0.024904719	-0.00974987	4.530059814
F295	L	5	2.14163065	12.19157219	0.007813752	0.024904719	-0.01951705	-9.08180046
F295	EX	0	-4.5186429	19.1648674	0.017176092	-0.00413494	0.044549517	44.81156158
F295	EX	1.25	-4.5186429	19.1648674	0.017176092	-0.00413494	0.023079403	20.85547829
F295	EX	2.5	-4.5186429	19.1648674	0.017176092	-0.00413494	0.001609286	-3.10060692
F295	EX	3.75	-4.5186429	19.1648674	0.017176092	-0.00413494	-0.01986083	-27.0566921
F295	EX	5	-4.5186429	19.1648674	0.017176092	-0.00413494	-0.04133095	-51.0127754
F295	EY	0	0.00668483	-0.00061114	-0.23416543	-0.0796357	-0.51530969	-0.00203801
F295	EY	1.25	0.00668483	-0.00061114	-0.23416543	-0.0796357	-0.22260292	-0.00127408
F295	EY	2.5	0.00668483	-0.00061114	-0.23416543	-0.0796357	0.070103876	-0.00051015
F295	EY	3.75	0.00668483	-0.00061114	-0.23416543	-0.0796357	0.362810701	0.000253779
F295	EY	5	0.00668483	-0.00061114	-0.23416543	-0.0796357	0.655517519	0.001017707
F295	COMB1	0	10.49838257	-78.6434097	0.050778739	0.097733483	0.123576641	-77.4129944
F295	COMB1	1.25	10.49838257	-55.0646667	0.050778739	0.097733483	0.060103212	10.05429745
F295	COMB1	2.5	10.49838257	-6.02841997	0.050778739	0.097733483	-0.00337021	48.64304733
F295	COMB1	3.75	10.49838257	43.00782394	0.050778739	0.097733483	-0.06684364	25.12534904
F295	COMB1	5	10.49838257	66.58657074	0.050778739	0.097733483	-0.13031706	-47.2708893
F295	COMB2	0	2.187725782	-33.724144	-0.02003138	0.029130265	-0.02929785	-6.43944168
F295	COMB2	1.25	2.187725782	-17.3310223	-0.02003138	0.029130265	-0.00425863	27.99934006
F295	COMB2	2.5	2.187725782	15.57334709	-0.02003138	0.029130265	0.020780597	29.3609314
F295	COMB2	3.75	2.187725782	48.47771454	-0.02003138	0.029130265	0.04581983	-10.9340315
F295	COMB2	5	2.187725782	64.87084198	-0.02003138	0.029130265	0.07085906	-84.3061752
F295	COMB3	0	5.446062088	-47.5232964	-0.20450976	-0.02642482	-0.44012615	-38.7052612
F295	COMB3	1.25	5.446062088	-31.1301765	-0.20450976	-0.02642482	-0.18448895	12.98245907
F295	COMB3	2.5	5.446062088	1.774194002	-0.20450976	-0.02642482	0.071148261	31.59299469
F295	COMB3	3.75	5.446062088	34.67856216	-0.20450976	-0.02642482	0.326785475	8.546973228
F295	COMB3	5	5.446062088	51.07168579	-0.20450976	-0.02642482	0.582422733	-47.5762329
F296	D	0	4.850914478	-79.7859726	0.216858655	12.08496952	0.360813171	-91.1737442
F296	D	0.75	4.850914478	-67.4455795	0.216858655	12.08496952	0.198168144	-35.7277679
F296	D	1.5	4.850914478	-51.3645363	0.216858655	12.08496952	0.035523091	9.06010437
F296	D	2.25	4.850914478	-35.283493	0.216858655	12.08496952	-0.12712196	41.3195343
F296	D	3	4.850914478	-22.9431019	0.216858655	12.08496952	-0.289767	62.92086029
F296	L	0	1.469320297	-12.6322193	0.079630472	4.259013653	0.13056913	-16.3021088

F296	L	0.75	1.469320297	-11.9290895	0.079630472	4.259013653	0.070845887	-7.00366783
F296	L	1.5	1.469320297	-9.81970119	0.079630472	4.259013653	0.011122648	1.240073204
F296	L	2.25	1.469320297	-7.71031237	0.079630472	4.259013653	-0.04860059	7.725978851
F296	L	3	1.469320297	-7.0071826	0.079630472	4.259013653	-0.10832383	13.1571846
F296	EX	0	-0.12860322	1.618880749	-0.54010683	-3.36470699	-0.83359385	2.807629585
F296	EX	0.75	-0.12860322	1.618880749	-0.54010683	-3.36470699	-0.42851114	1.593461156
F296	EX	1.5	-0.12860322	1.618880749	-0.54010683	-3.36470699	-0.0234284	0.379292697
F296	EX	2.25	-0.12860322	1.618880749	-0.54010683	-3.36470699	0.381654352	-0.8348757
F296	EX	3	-0.12860322	1.618880749	-0.54010683	-3.36470699	0.786737144	-2.04904437
F296	EY	0	-4.98593426	16.8305378	-0.17443328	0.006888606	-0.3324658	46.31289673
F296	EY	0.75	-4.98593426	16.8305378	-0.17443328	0.006888606	-0.20163999	33.68990707
F296	EY	1.5	-4.98593426	16.8305378	-0.17443328	0.006888606	-0.07081419	21.06692314
F296	EY	2.25	-4.98593426	16.8305378	-0.17443328	0.006888606	0.060011607	8.443938255
F296	EY	3	-4.98593426	16.8305378	-0.17443328	0.006888606	0.190837398	-4.17904711
F296	COMB1	0	8.172009468	-115.954712	0.387639135	21.31638527	0.641886413	-135.491867
F296	COMB1	0.75	8.172009468	-100.02124	0.387639135	21.31638527	0.351155192	-54.0791931
F296	COMB1	1.5	8.172009468	-77.3489609	0.387639135	21.31638527	0.060423948	12.85624218
F296	COMB1	2.25	8.172009468	-54.676693	0.387639135	21.31638527	-0.23030728	61.94500351
F296	COMB1	3	8.172009468	-38.7432137	0.387639135	21.31638527	-0.52103853	96.55652618
F296	COMB2	0	3.852622271	-80.7772522	-0.36117187	10.55050564	-0.54751325	-83.3731384
F296	COMB2	0.75	3.852622271	-67.5983582	-0.36117187	10.55050564	-0.27663264	-27.4587593
F296	COMB2	1.5	3.852622271	-50.0488052	-0.36117187	10.55050564	-0.00575198	16.93238068
F296	COMB2	2.25	3.852622271	-32.4992561	-0.36117187	10.55050564	0.265128672	47.61493683
F296	COMB2	3	3.852622271	-19.3203583	-0.36117187	10.55050564	0.536009312	66.77425385
F296	COMB3	0	0.28055504	-69.572403	-0.10050341	12.978158	-0.19168803	-51.3546524
F296	COMB3	0.75	0.28055504	-56.3935089	-0.10050341	12.978158	-0.11630999	-3.84396935
F296	COMB3	1.5	0.28055504	-38.843956	-0.10050341	12.978158	-0.04093196	32.14347839
F296	COMB3	2.25	0.28055504	-21.294405	-0.10050341	12.978158	0.034446072	54.42234039
F296	COMB3	3	0.28055504	-8.11550713	-0.10050341	12.978158	0.109824106	65.17796326
F297	D	0	8.531481743	-90.0860977	0.146215558	-1.34762788	0.245963871	-115.298462
F297	D	0.75	8.531481743	-83.3754272	0.146215558	-1.34762788	0.136301488	-49.782383
F297	D	1.5	8.531481743	-69.1834641	0.146215558	-1.34762788	0.026639115	7.895153522
F297	D	2.25	8.531481743	-54.991497	0.146215558	-1.34762788	-0.08302327	53.99348068
F297	D	3	8.531481743	-48.2808266	0.146215558	-1.34762788	-0.19268563	92.25326538
F297	L	0	3.020161152	-27.0664959	0.051807355	-0.34555191	0.084841117	-35.3633423
F297	L	0.75	3.020161152	-25.6602364	0.051807355	-0.34555191	0.045985349	-15.4149055
F297	L	1.5	3.020161152	-21.4414597	0.051807355	-0.34555191	0.00712958	2.424127817
F297	L	2.25	3.020161152	-17.222681	0.051807355	-0.34555191	-0.03172619	16.74748993
F297	L	3	3.020161152	-15.8164234	0.051807355	-0.34555191	-0.07058196	28.96145058
F297	EX	0	-0.10218614	-0.19272143	-0.24388449	-4.21996784	-0.34562179	0.042588416
F297	EX	0.75	-0.10218614	-0.19272143	-0.24388449	-4.21996784	-0.16270725	0.187130406
F297	EX	1.5	-0.10218614	-0.19272143	-0.24388449	-4.21996784	0.020207308	0.3316724
F297	EX	2.25	-0.10218614	-0.19272143	-0.24388449	-4.21996784	0.203121856	0.476214409
F297	EX	3	-0.10218614	-0.19272143	-0.24388449	-4.21996784	0.386036426	0.620756447
F297	EY	0	-4.99195004	16.05925369	-0.45656848	0.015660649	-0.89521003	44.19845581
F297	EY	0.75	-4.99195004	16.05925369	-0.45656848	0.015660649	-0.55278146	32.15394211
F297	EY	1.5	-4.99195004	16.05925369	-0.45656848	0.015660649	-0.21035284	20.10942268
F297	EY	2.25	-4.99195004	16.05925369	-0.45656848	0.015660649	0.132075727	8.064903259
F297	EY	3	-4.99195004	16.05925369	-0.45656848	0.015660649	0.474504292	-3.9796145
F297	COMB1	0	15.07003593	-151.409714	0.258350432	-2.17003655	0.430902451	-194.939499
F297	COMB1	0.75	15.07003593	-141.106888	0.258350432	-2.17003655	0.237138346	-84.40271
F297	COMB1	1.5	15.07003593	-117.326492	0.258350432	-2.17003655	0.043374266	13.35278893
F297	COMB1	2.25	15.07003593	-93.5460892	0.258350432	-2.17003655	-0.15038982	91.58816528
F297	COMB1	3	15.07003593	-83.2432709	0.258350432	-2.17003655	-0.34415391	157.0422363
F297	COMB2	0	8.231179237	-98.2571487	-0.22639388	-5.88659191	-0.35472271	-118.236244
F297	COMB2	0.75	8.231179237	-90.7679749	-0.22639388	-5.88659191	-0.18492621	-46.805027
F297	COMB2	1.5	8.231179237	-74.5374985	-0.22639388	-5.88659191	-0.01512969	15.7312603
F297	COMB2	2.25	8.231179237	-58.3070183	-0.22639388	-5.88659191	0.154666796	65.00193787
F297	COMB2	3	8.231179237	-50.8178444	-0.22639388	-5.88659191	0.324463308	105.3776932
F297	COMB3	0	4.635669708	-86.3148422	-0.38637486	-2.83670449	-0.76385432	-85.781044
F297	COMB3	0.75	4.635669708	-78.8256607	-0.38637486	-2.83670449	-0.47407135	-23.306612
F297	COMB3	1.5	4.635669708	-62.5951843	-0.38637486	-2.83670449	-0.18428829	30.27288246
F297	COMB3	2.25	4.635669708	-46.3647079	-0.38637486	-2.83670449	0.105494715	70.5867691
F297	COMB3	3	4.635669708	-38.8755341	-0.38637486	-2.83670449	0.395277739	102.0057297
F298	D	0	8.317836761	-87.7205276	0.050082114	0.100938141	0.086707741	-111.7033
F298	D	0.75	8.317836761	-81.0098648	0.050082114	0.100938141	0.049145918	-47.9614067
F298	D	1.5	8.317836761	-66.817894	0.050082114	0.100938141	0.011584091	7.94194746
F298	D	2.25	8.317836761	-52.6259308	0.050082114	0.100938141	-0.02597773	52.26609039
F298	D	3	8.317836761	-45.9152679	0.050082114	0.100938141	-0.06353956	88.75169373
F298	L	0	2.959117413	-26.3449631	0.018255161	0.004958773	0.030879783	-34.2388344
F298	L	0.75	2.959117413	-24.9387035	0.018255161	0.004958773	0.017188326	-14.8315496
F298	L	1.5	2.959117413	-20.7199268	0.018255161	0.004958773	0.003496866	2.46633029
F298	L	2.25	2.959117413	-16.5011482	0.018255161	0.004958773	-0.01019459	16.24854088
F298	L	3	2.959117413	-15.0948896	0.018255161	0.004958773	-0.02388605	27.92134666
F298	EX	0	-0.37133509	0.338423103	-0.12079967	-3.9553442	-0.22326507	0.856708169
F298	EX	0.75	-0.37133509	0.338423103	-0.12079967	-3.9553442	-0.13266473	0.60288924
F298	EX	1.5	-0.37133509	0.338423103	-0.12079967	-3.9553442	-0.0420644	0.349070281
F298	EX	2.25	-0.37133509	0.338423103	-0.12079967	-3.9553442	0.048535936	0.095251352
F298	EX	3	-0.37133509	0.338423103	-0.12079967	-3.9553442	0.13913627	-0.15856761
F298	EY	0	-5.12445164	14.34453583	-0.29545531	0.011036903	-0.59611487	39.47875977
F298	EY	0.75	-5.12445164	14.34453583	-0.29545531	0.011036903	-0.37452194	28.72029114
F298	EY	1.5	-5.12445164	14.34453583	-0.29545531	0.011036903	-0.15292904	17.9618187
F298	EY	2.25	-5.12445164	14.34453583	-0.29545531	0.011036903	0.068663858	7.203348637
F298	EY	3	-5.12445164	14.34453583	-0.29545531	0.011036903	0.290256768	-3.55512285

F300	COMB3	3	5.051442146	-39.1457977	0.406919777	0.396544963	-0.40626997	103.6550217
F301	D	0	6.307061195	-95.6262283	-0.20704471	-11.8542337	-0.33989179	-108.210167
F301	D	0.75	6.307061195	-81.4155197	-0.20704471	-11.8542337	-0.18460725	-41.3514977
F301	D	1.5	6.307061195	-59.7235031	-0.20704471	-11.8542337	-0.02932271	12.04355717
F301	D	2.25	6.307061195	-38.0314903	-0.20704471	-11.8542337	0.125961825	48.23432922
F301	D	3	6.307061195	-23.8207722	-0.20704471	-11.8542337	0.281246364	70.96149445
F301	L	0	3.048229218	-29.4279575	-0.07408965	-4.20763922	-0.11810766	-34.4034958
F301	L	0.75	3.048229218	-26.7560635	-0.07408965	-4.20763922	-0.06254005	-13.0003653
F301	L	1.5	3.048229218	-18.740387	-0.07408965	-4.20763922	-0.00697246	4.394902706
F301	L	2.25	3.048229218	-10.7247095	-0.07408965	-4.20763922	0.04859513	15.11039639
F301	L	3	3.048229218	-8.05281734	-0.07408965	-4.20763922	0.10416273	21.81802559
F301	EX	0	0.301715106	-1.59199739	0.324506283	-3.31712317	0.512710154	-2.75793362
F301	EX	0.75	0.301715106	-1.59199739	0.324506283	-3.31712317	0.269328833	-1.56392777
F301	EX	1.5	0.301715106	-1.59199739	0.324506283	-3.31712317	0.025947573	-0.36992192
F301	EX	2.25	0.301715106	-1.59199739	0.324506283	-3.31712317	-0.21743369	0.824083924
F301	EX	3	0.301715106	-1.59199739	0.324506283	-3.31712317	-0.46081495	2.018089771
F301	EY	0	-4.98593283	16.83054733	0.174429432	-0.00688869	0.332458615	46.31291962
F301	EY	0.75	-4.98593283	16.83054733	0.174429432	-0.00688869	0.201635703	33.68992996
F301	EY	1.5	-4.98593283	16.83054733	0.174429432	-0.00688869	0.070812792	21.06693459
F301	EY	2.25	-4.98593283	16.83054733	0.174429432	-0.00688869	-0.06001012	8.443943024
F301	EY	3	-4.98593283	16.83054733	0.174429432	-0.00688869	-0.19083303	-4.17904997
F301	COMB1	0	12.44563961	-161.836197	-0.36699709	-20.957304	-0.59684241	-184.897797
F301	COMB1	0.75	12.44563961	-140.508316	-0.36699709	-20.957304	-0.32159281	-70.4223862
F301	COMB1	1.5	12.44563961	-101.652824	-0.36699709	-20.957304	-0.0463432	21.48411179
F301	COMB1	2.25	12.44563961	-62.7973213	-0.36699709	-20.957304	0.228906393	82.05783081
F301	COMB1	3	12.44563961	-41.4694328	-0.36699709	-20.957304	0.504155993	120.0626297
F301	COMB2	0	6.324312687	-106.023438	0.15007408	-17.2077446	0.241289154	-112.723671
F301	COMB2	0.75	6.324312687	-90.2605438	0.15007408	-17.2077446	0.128732875	-38.5205269
F301	COMB2	1.5	6.324312687	-64.958992	0.15007408	-17.2077446	0.016176591	20.28334427
F301	COMB2	2.25	6.324312687	-39.6574402	0.15007408	-17.2077446	-0.09637967	58.91859055
F301	COMB2	3	6.324312687	-23.8945427	0.15007408	-17.2077446	-0.20893593	82.1545639
F301	COMB3	0	2.442417383	-92.506752	0.044635195	-14.8244791	0.116494961	-76.6979599
F301	COMB3	0.75	2.442417383	-76.7438583	0.044635195	-14.8244791	0.083018348	-12.6324015
F301	COMB3	1.5	2.442417383	-51.4423027	0.044635195	-14.8244791	0.049541738	36.03388596
F301	COMB3	2.25	2.442417383	-26.1407509	0.044635195	-14.8244791	0.016065139	64.53154755
F301	COMB3	3	2.442417383	-10.3778524	0.044635195	-14.8244791	-0.01741145	77.62994385
F302	D	0	0.302399993	-35.7507668	-0.03105813	-0.03577637	-0.08029659	-24.8829193
F302	D	1.25	0.302399993	-23.1101418	-0.03105813	-0.03577637	-0.04147392	14.06986141
F302	D	2.5	0.302399993	3.661728144	-0.03105813	-0.03577637	-0.00265125	26.45025063
F302	D	3.75	0.302399993	30.43359756	-0.03105813	-0.03577637	0.036171414	4.915541649
F302	D	5	0.302399993	43.07421875	-0.03105813	-0.03577637	0.07499408	-43.1915588
F302	L	0	0.117869191	-12.0302668	-0.00856694	-0.0071828	-0.02228451	-8.81826591
F302	L	1.25	0.117869191	-8.12401772	-0.00856694	-0.0071828	-0.01157583	4.591964722
F302	L	2.5	0.117869191	1.094732881	-0.00856694	-0.0071828	-0.00086715	9.069903374
F302	L	3.75	0.117869191	10.31348324	-0.00856694	-0.0071828	0.009841527	1.855132461
F302	L	5	0.117869191	14.21973324	-0.00856694	-0.0071828	0.020550206	-14.2919302
F302	EX	0	-0.90813506	2.376259804	0.008255096	-0.00318935	0.027167231	6.960994244
F302	EX	1.25	-0.90813506	2.376259804	0.008255096	-0.00318935	0.016848359	3.99066925
F302	EX	2.5	-0.90813506	2.376259804	0.008255096	-0.00318935	0.006529489	1.020344615
F302	EX	3.75	-0.90813506	2.376259804	0.008255096	-0.00318935	-0.00378938	-1.94998026
F302	EX	5	-0.90813506	2.376259804	0.008255096	-0.00318935	-0.01410825	-4.92030525
F302	EY	0	0.03689377	-0.00280982	0.154062673	-0.01520962	0.385775954	-0.00951062
F302	EY	1.25	0.03689377	-0.00280982	0.154062673	-0.01520962	0.193197608	-0.00599835
F302	EY	2.5	0.03689377	-0.00280982	0.154062673	-0.01520962	0.000619269	-0.00248608
F302	EY	3.75	0.03689377	-0.00280982	0.154062673	-0.01520962	-0.19195907	0.001026193
F302	EY	5	0.03689377	-0.00280982	0.154062673	-0.01520962	-0.38453743	0.004538464
F302	COMB1	0	0.551470697	-62.1493454	-0.05097687	-0.05442411	-0.13201113	-43.9687309
F302	COMB1	1.25	0.551470697	-40.7305984	-0.05097687	-0.05442411	-0.06829004	24.2309761
F302	COMB1	2.5	0.551470697	6.145646095	-0.05097687	-0.05442411	-0.00456895	46.25214767
F302	COMB1	3.75	0.551470697	53.02188873	-0.05097687	-0.05442411	0.059152141	8.866862297
F302	COMB1	5	0.551470697	74.44063568	-0.05097687	-0.05442411	0.122873232	-74.6969604
F302	COMB2	0	-0.57364941	-38.8692932	0.021764142	-0.04791977	0.058306467	-21.703186
F302	COMB2	1.25	-0.57364941	-24.366169	0.021764142	-0.04791977	0.031101294	20.34827614
F302	COMB2	2.5	-0.57364941	6.648199081	0.021764142	-0.04791977	0.003896121	31.68505669
F302	COMB2	3.75	-0.57364941	37.66256714	0.021764142	-0.04791977	-0.02330905	3.72777915
F302	COMB2	5	-0.57364941	52.16569138	0.021764142	-0.04791977	-0.05051422	-54.9441795
F302	COMB3	0	0.107324719	-40.5822678	0.129056543	-0.05680251	0.322291404	-26.7220917
F302	COMB3	1.25	0.107324719	-26.0791416	0.129056543	-0.05680251	0.160970718	17.47058487
F302	COMB3	2.5	0.107324719	4.935226917	0.129056543	-0.05680251	-0.00034995	30.9485817
F302	COMB3	3.75	0.107324719	35.94959641	0.129056543	-0.05680251	-0.16167061	5.132519245
F302	COMB3	5	0.107324719	50.45271683	0.129056543	-0.05680251	-0.32299128	-51.3982239
F303	D	0	0.464257091	-39.7453194	-0.01758378	-0.00344401	-0.0447678	-40.313488
F303	D	1.25	0.464257091	-27.1046982	-0.01758378	-0.00344401	-0.02278807	3.63248682
F303	D	2.5	0.464257091	-0.33282876	-0.01758378	-0.00344401	-0.00080834	21.006073
F303	D	3.75	0.464257091	26.43904114	-0.01758378	-0.00344401	0.021171387	4.464558601
F303	D	5	0.464257091	39.07966232	-0.01758378	-0.00344401	0.043151118	-38.6493454
F303	L	0	0.186246693	-13.2157221	-0.00404925	0.000974597	-0.0103421	-13.587141
F303	L	1.25	0.186246693	-9.30947208	-0.00404925	0.000974597	-0.00528054	1.304908633
F303	L	2.5	0.186246693	-0.09072176	-0.00404925	0.000974597	-0.00021897	7.264665127
F303	L	3.75	0.186246693	9.12802887	-0.00404925	0.000974597	0.004842597	1.531713009
F303	L	5	0.186246693	13.03427887	-0.00404925	0.000974597	0.009904163	-13.1335316
F303	EX	0	-1.38824642	1.540156841	-0.0017316	0.000851577	-0.00432402	3.717757702
F303	EX	1.25	-1.38824642	1.540156841	-0.0017316	0.000851577	-0.00215952	1.792561769
F303	EX	2.5	-1.38824642	1.540156841	-0.0017316	0.000851577	4.99051E-06	-0.13263439

F303	EX	3.75	-1.38824642	1.540156841	-0.0017316	0.000851577	0.002169497	-2.05783057
F303	EX	5	-1.38824642	1.540156841	-0.0017316	0.000851577	0.004334003	-3.98302674
F303	EY	0	0.199399307	-0.01141911	0.27909863	-0.03322838	0.695676327	-0.0272185
F303	EY	1.25	0.199399307	-0.01141911	0.27909863	-0.03322838	0.34680301	-0.01294461
F303	EY	2.5	0.199399307	-0.01141911	0.27909863	-0.03322838	-0.00207032	0.001329281
F303	EY	3.75	0.199399307	-0.01141911	0.27909863	-0.03322838	-0.35094362	0.015603173
F303	EY	5	0.199399307	-0.01141911	0.27909863	-0.03322838	-0.69981694	0.029877065
F303	COMB1	0	0.855103195	-68.8395386	-0.02757934	-0.00257345	-0.07026872	-70.1156082
F303	COMB1	1.25	0.855103195	-47.4207916	-0.02757934	-0.00257345	-0.03579454	6.446837902
F303	COMB1	2.5	0.855103195	-0.54454929	-0.02757934	-0.00257345	-0.00132036	36.83074951
F303	COMB1	3.75	0.855103195	46.33169556	-0.02757934	-0.00257345	0.033153817	7.808211327
F303	COMB1	5	0.855103195	67.7504425	-0.02757934	-0.00257345	0.067628004	-67.392868
F303	COMB2	0	-0.82788664	-44.3050728	0.066385373	-0.01289477	0.16439873	-42.7698059
F303	COMB2	1.25	-0.82788664	-29.8019524	0.066385373	-0.01289477	0.081417002	6.076381207
F303	COMB2	2.5	-0.82788664	1.212417722	0.066385373	-0.01289477	-0.00156472	24.20788765
F303	COMB2	3.75	-0.82788664	32.22678757	0.066385373	-0.01289477	-0.08454644	3.045336723
F303	COMB2	5	-0.82788664	46.72990799	0.066385373	-0.01289477	-0.16752815	-48.8318977
F303	COMB3	0	0.318209291	-45.4223785	0.27276963	-0.03793076	0.67883414	-45.4665985
F303	COMB3	1.25	0.318209291	-30.9192581	0.27276963	-0.03793076	0.337872058	4.776222706
F303	COMB3	2.5	0.318209291	0.095111787	0.27276963	-0.03793076	-0.00309	24.30436134
F303	COMB3	3.75	0.318209291	31.10948181	0.27276963	-0.03793076	-0.34405205	4.538443089
F303	COMB3	5	0.318209291	45.61260223	0.27276963	-0.03793076	-0.68501407	-45.9421577
F304	D	0	0.51473105	-39.4123001	-0.00021943	-0.0001004	-0.00145089	-38.8729401
F304	D	1.25	0.51473105	-26.7716808	-0.00021943	-0.0001004	-0.00117661	4.656763077
F304	D	2.5	0.51473105	0.00018994	-0.00021943	-0.0001004	-0.00090233	21.61407471
F304	D	3.75	0.51473105	26.77206039	-0.00021943	-0.0001004	-0.00062805	4.656288147
F304	D	5	0.51473105	39.41268158	-0.00021943	-0.0001004	-0.00035377	-38.8738899
F304	L	0	0.209371954	-13.0802183	-0.00047464	-7.4565E-05	-0.00142862	-13.146759
F304	L	1.25	0.209371954	-9.17396832	-0.00047464	-7.4565E-05	-0.00083532	1.575910091
F304	L	2.5	0.209371954	0.044781905	-0.00047464	-7.4565E-05	-0.00024202	7.366287231
F304	L	3.75	0.209371954	9.263532639	-0.00047464	-7.4565E-05	0.000351275	1.463955283
F304	L	5	0.209371954	13.16978168	-0.00047464	-7.4565E-05	0.000944575	-13.3706684
F304	EX	0	-1.36038208	1.645500422	0.111984618	-0.01125534	0.28055793	4.116163254
F304	EX	1.25	-1.36038208	1.645500422	0.111984618	-0.01125534	0.140577167	2.059287786
F304	EX	2.5	-1.36038208	1.645500422	0.111984618	-0.01125534	0.00059638	0.002412309
F304	EX	3.75	-1.36038208	1.645500422	0.111984618	-0.01125534	-0.1393844	-2.05446315
F304	EX	5	-1.36038208	1.645500422	0.111984618	-0.01125534	-0.27936518	-4.11133862
F304	EY	0	0.334286273	-1.14E-07	-1.279E-05	-2.6535E-08	0.000693456	0.006345167
F304	EY	1.25	0.334286273	-1.14E-07	-1.279E-05	-2.6535E-08	0.000709444	0.006345309
F304	EY	2.5	0.334286273	-1.14E-07	-1.279E-05	-2.6535E-08	0.000725432	0.006345452
F304	EY	3.75	0.334286273	-1.14E-07	-1.279E-05	-2.6535E-08	0.00074142	0.006345594
F304	EY	5	0.334286273	-1.14E-07	-1.279E-05	-2.6535E-08	0.000757408	0.006345737
F304	COMB1	0	0.952672422	-68.223114	-0.00102273	-0.00023979	-0.00402687	-67.6823425
F304	COMB1	1.25	0.952672422	-46.8043671	-0.00102273	-0.00023979	-0.00274845	8.109572411
F304	COMB1	2.5	0.952672422	0.071878977	-0.00102273	-0.00023979	-0.00147003	37.72294998
F304	COMB1	3.75	0.952672422	46.94812393	-0.00102273	-0.00023979	-0.00019162	7.92987442
F304	COMB1	5	0.952672422	68.36687469	-0.00102273	-0.00023979	0.001086802	-68.0417404
F304	COMB2	0	-0.69627553	-43.8000946	0.115520142	-0.01177819	0.288622439	-40.6955872
F304	COMB2	1.25	-0.69627553	-29.2969723	0.115520142	-0.01177819	0.144222274	7.519374847
F304	COMB2	2.5	-0.69627553	1.717398643	0.115520142	-0.01177819	-0.00017792	25.01965332
F304	COMB2	3.75	-0.69627553	32.73176956	0.115520142	-0.01177819	-0.14457811	3.225878239
F304	COMB2	5	-0.69627553	47.2348938	0.115520142	-0.01177819	-0.28897828	-49.2825813
F304	COMB3	0	0.528899968	-44.9848518	0.034881815	-0.00367437	0.08713042	-43.6545601
F304	COMB3	1.25	0.528899968	-30.4817314	0.034881815	-0.00367437	0.043528154	6.041351318
F304	COMB3	2.5	0.528899968	0.532638252	0.034881815	-0.00367437	-7.4119E-05	25.0225811
F304	COMB3	3.75	0.528899968	31.54700851	0.034881815	-0.00367437	-0.04367639	4.709755421
F304	COMB3	5	0.528899968	46.05013275	0.034881815	-0.00367437	-0.08727866	-46.3177528
F305	D	0	0.46439147	-39.0088081	0.016351696	0.003338544	0.040095266	-38.547493
F305	D	1.25	0.46439147	-26.3681889	0.016351696	0.003338544	0.019655645	4.477845669
F305	D	2.5	0.46439147	0.40368098	0.016351696	0.003338544	-0.00078398	20.93079376
F305	D	3.75	0.46439147	27.17555046	0.016351696	0.003338544	-0.0212236	3.468643188
F305	D	5	0.46439147	39.81617355	0.016351696	0.003338544	-0.04166322	-40.5658989
F305	L	0	0.186222106	-13.1809702	0.000280908	-0.00363168	0.000493646	-13.5341911
F305	L	1.25	0.186222106	-9.27471924	0.000280908	-0.00363168	0.000142511	1.314417481
F305	L	2.5	0.186222106	-0.05596913	0.000280908	-0.00363168	-0.00020862	7.230733395
F305	L	3.75	0.186222106	9.162781715	0.000280908	-0.00363168	-0.00055976	1.454340219
F305	L	5	0.186222106	13.06903076	0.000280908	-0.00363168	-0.0009109	-13.2543449
F305	EX	0	-1.03475988	1.531345487	-0.00410156	0.000896964	-0.00999571	3.963157892
F305	EX	1.25	-1.03475988	1.531345487	-0.00410156	0.000896964	-0.00486877	2.048975945
F305	EX	2.5	-1.03475988	1.531345487	-0.00410156	0.000896964	0.000258179	0.134794146
F305	EX	3.75	-1.03475988	1.531345487	-0.00410156	0.000896964	0.005385123	-1.77938771
F305	EX	5	-1.03475988	1.531345487	-0.00410156	0.000896964	0.010512068	-3.69356942
F305	EY	0	0.199391782	0.01141911	-0.27909082	0.033228658	-0.69979739	0.029877052
F305	EY	1.25	0.199391782	0.01141911	-0.27909082	0.033228658	-0.35093388	0.015603162
F305	EY	2.5	0.199391782	0.01141911	-0.27909082	0.033228658	-0.00207035	0.001329275
F305	EY	3.75	0.199391782	0.01141911	-0.27909082	0.033228658	0.346793205	-0.01294461
F305	EY	5	0.199391782	0.01141911	-0.27909082	0.033228658	0.695656717	-0.0272185
F305	COMB1	0	0.855225146	-67.9001236	0.020071488	-0.00180443	0.048904151	-67.9116974
F305	COMB1	1.25	0.855225146	-46.4813766	0.020071488	-0.00180443	0.02381479	7.476482868
F305	COMB1	2.5	0.855225146	0.394866586	0.020071488	-0.00180443	-0.00127457	36.68612671
F305	COMB1	3.75	0.855225146	47.27111053	0.020071488	-0.00180443	-0.02636394	6.489316463
F305	COMB1	5	0.855225146	68.68985748	0.020071488	-0.00180443	-0.0514533	-69.8860321
F305	COMB2	0	-0.46189705	-43.5227165	-0.07490095	0.013756877	-0.18852621	-40.6268578
F305	COMB2	1.25	-0.46189705	-29.0195942	-0.07490095	0.013756877	-0.09490003	7.241384506

F308	L	0.75	3.024678946	13.02527905	-0.01657015	0.359238327	-0.02726207	19.88747597
F308	L	1.5	3.024678946	17.24402046	-0.01657015	0.359238327	-0.01483448	8.712291718
F308	L	2.25	3.024678946	21.46276283	-0.01657015	0.359238327	-0.00240689	-5.97850323
F308	L	3	3.024678946	22.86901093	-0.01657015	0.359238327	0.010020697	-22.7786655
F308	EX	0	-0.11217285	0.643381476	0.236226887	4.418095112	0.376252204	0.616715491
F308	EX	0.75	-0.11217285	0.643381476	0.236226887	4.418095112	0.199082375	0.134180307
F308	EX	1.5	-0.11217285	0.643381476	0.236226887	4.418095112	0.021912573	-0.34835485
F308	EX	2.25	-0.11217285	0.643381476	0.236226887	4.418095112	-0.15525724	-0.83089006
F308	EX	3	-0.11217285	0.643381476	0.236226887	4.418095112	-0.33242705	-1.31342518
F308	EY	0	-4.86691427	16.06786346	-0.61907399	-0.01609632	-0.60570943	-3.96159601
F308	EY	0.75	-4.86691427	16.06786346	-0.61907399	-0.01609632	-0.14140484	-16.0124683
F308	EY	1.5	-4.86691427	16.06786346	-0.61907399	-0.01609632	0.322899729	-28.0633411
F308	EY	2.25	-4.86691427	16.06786346	-0.61907399	-0.01609632	0.787204325	-40.1142159
F308	EY	3	-4.86691427	16.06786346	-0.61907399	-0.01609632	1.251508832	-52.1650887
F308	COMB1	0	15.09343338	60.0369072	-0.04528207	2.411310911	-0.15101196	156.9904022
F308	COMB1	0.75	15.09343338	70.33963776	-0.04528207	2.411310911	-0.11705048	108.9416275
F308	COMB1	1.5	15.09343338	94.1198349	-0.04528207	2.411310911	-0.08308899	48.11178589
F308	COMB1	2.25	15.09343338	117.9000397	-0.04528207	2.411310911	-0.04912751	-32.2378464
F308	COMB1	3	15.09343338	128.202774	-0.04528207	2.411310911	-0.01516603	-125.368553
F308	COMB2	0	8.275800705	45.65291977	0.027843328	6.287781239	0.109550364	105.3426666
F308	COMB2	0.75	8.275800705	53.14202881	0.027843328	6.287781239	0.088667914	68.84096527
F308	COMB2	1.5	8.275800705	69.37237549	0.027843328	6.287781239	0.067785472	23.44447708
F308	COMB2	2.25	8.275800705	85.60271454	0.027843328	6.287781239	0.046903022	-35.2173882
F308	COMB2	3	8.275800705	93.09182739	0.027843328	6.287781239	0.026020564	-102.774033
F308	COMB3	0	4.779383183	56.99956512	-0.5972594	3.094922304	-0.60654765	101.9868622
F308	COMB3	0.75	4.779383183	64.48867798	-0.5972594	3.094922304	-0.15860395	56.97518921
F308	COMB3	1.5	4.779383183	80.71901703	-0.5972594	3.094922304	0.289339721	3.068736315
F308	COMB3	2.25	4.779383183	96.94935608	-0.5972594	3.094922304	0.737283409	-64.103096
F308	COMB3	3	4.779383183	104.4384689	-0.5972594	3.094922304	1.185227036	-140.169708
F309	D	0	8.335201263	32.57670212	-0.00039186	-0.12265591	-0.01893755	88.74835205
F309	D	0.75	8.335201263	39.28731155	-0.00039186	-0.12265591	-0.01864366	62.2669754
F309	D	1.5	8.335201263	53.47915649	-0.00039186	-0.12265591	-0.01834977	27.94719696
F309	D	2.25	8.335201263	67.67099762	-0.00039186	-0.12265591	-0.01805587	-17.9515953
F309	D	3	8.335201263	74.38160706	-0.00039186	-0.12265591	-0.01776198	-71.6887894
F309	L	0	2.962692022	11.01960754	-0.0048701	-0.00826906	-0.01255327	27.92239761
F309	L	0.75	2.962692022	12.42585468	-0.0048701	-0.00826906	-0.0089007	19.30614662
F309	L	1.5	2.962692022	16.6445961	-0.0048701	-0.00826906	-0.00524813	8.580530167
F309	L	2.25	2.962692022	20.86333847	-0.0048701	-0.00826906	-0.00159556	-5.66069698
F309	L	3	2.962692022	22.26958466	-0.0048701	-0.00826906	0.002057015	-22.0112915
F309	EX	0	-0.25761887	0.233079582	-0.14866403	4.143845558	-0.13708767	-0.1464607
F309	EX	0.75	-0.25761887	0.233079582	-0.14866403	4.143845558	-0.02558987	-0.32127002
F309	EX	1.5	-0.25761887	0.233079582	-0.14866403	4.143845558	0.085907936	-0.49607933
F309	EX	2.25	-0.25761887	0.233079582	-0.14866403	4.143845558	0.197405726	-0.67088872
F309	EX	3	-0.25761887	0.233079582	-0.14866403	4.143845558	0.308903545	-0.845698
F309	EY	0	-5.4035635	14.33311653	-0.43034223	-0.012495	-0.41025364	-3.58835125
F309	EY	0.75	-5.4035635	14.33311653	-0.43034223	-0.012495	-0.08749761	-14.3381672
F309	EY	1.5	-5.4035635	14.33311653	-0.43034223	-0.012495	0.235258415	-25.0879841
F309	EY	2.25	-5.4035635	14.33311653	-0.43034223	-0.012495	0.558014452	-35.8377991
F309	EY	3	-5.4035635	14.33311653	-0.43034223	-0.012495	0.880770504	-46.587616
F309	COMB1	0	14.74254799	56.72341156	-0.0082624	-0.16041759	-0.04281029	151.1738586
F309	COMB1	0.75	14.74254799	67.02613831	-0.0082624	-0.16041759	-0.03661351	105.6102066
F309	COMB1	1.5	14.74254799	90.80634308	-0.0082624	-0.16041759	-0.03041672	47.26548386
F309	COMB1	2.25	14.74254799	114.5865402	-0.0082624	-0.16041759	-0.02421994	-30.5990295
F309	COMB1	3	14.74254799	124.889267	-0.0082624	-0.16041759	-0.01802315	-121.244614
F309	COMB2	0	7.716451168	42.4328804	-0.2913706	4.153550625	-0.29495433	100.6994019
F309	COMB2	0.75	7.716451168	49.92198944	-0.2913706	4.153550625	-0.07642682	66.6127243
F309	COMB2	1.5	7.716451168	66.15232849	-0.2913706	4.153550625	0.142100692	23.63126755
F309	COMB2	2.25	7.716451168	82.38266754	-0.2913706	4.153550625	0.360628217	-32.6155701
F309	COMB2	3	7.716451168	89.8717804	-0.2913706	4.153550625	0.579155743	-97.7571869
F309	COMB3	0	3.93031764	52.79990387	-0.50063407	1.160798192	-0.49778765	98.16741943
F309	COMB3	0.75	3.93031764	60.28901291	-0.50063407	1.160798192	-0.12231287	56.30548477
F309	COMB3	1.5	3.93031764	76.51935577	-0.50063407	1.160798192	0.253161907	5.54877615
F309	COMB3	2.25	3.93031764	92.74969482	-0.50063407	1.160798192	0.628636718	-58.4733124
F309	COMB3	3	3.93031764	100.2388	-0.50063407	1.160798192	1.004111528	-131.390182
F310	D	0	8.331084251	32.54153061	0.002882137	0.174957648	0.021622745	88.69229889
F310	D	0.75	8.331084251	39.25214386	0.002882137	0.174957648	0.019461146	62.23730087
F310	D	1.5	8.331084251	53.44398499	0.002882137	0.174957648	0.017299548	27.94389725
F310	D	2.25	8.331084251	67.63583374	0.002882137	0.174957648	0.015137948	-17.9285202
F310	D	3	8.331084251	74.34644318	0.002882137	0.174957648	0.01297635	-71.6393356
F310	L	0	3.009909868	11.11355019	0.011262924	-0.09300995	0.018351618	28.15314293
F310	L	0.75	3.009909868	12.51979733	0.011262924	-0.09300995	0.009904441	19.46643448
F310	L	1.5	3.009909868	16.73853874	0.011262924	-0.09300995	0.001457264	8.670361519
F310	L	2.25	3.009909868	20.95728111	0.011262924	-0.09300995	-0.00698991	-5.64132309
F310	L	3	3.009909868	22.3635273	0.011262924	-0.09300995	-0.01543709	-22.0623741
F310	EX	0	0.198074356	-0.23346113	-0.28276137	4.130355835	-0.37262359	0.15505971
F310	EX	0.75	0.198074356	-0.23346113	-0.28276137	4.130355835	-0.16055301	0.330155194
F310	EX	1.5	0.198074356	-0.23346113	-0.28276137	4.130355835	0.05151761	0.505250692
F310	EX	2.25	0.198074356	-0.23346113	-0.28276137	4.130355835	0.26358822	0.680346191
F310	EX	3	0.198074356	-0.23346113	-0.28276137	4.130355835	0.475658834	0.85544163
F310	EY	0	-5.40367985	14.33311462	0.430368155	0.012494407	0.410279274	-3.58835125
F310	EY	0.75	-5.40367985	14.33311462	0.430368155	0.012494407	0.087503791	-14.3381662
F310	EY	1.5	-5.40367985	14.33311462	0.430368155	0.012494407	-0.23527169	-25.0879803
F310	EY	2.25	-5.40367985	14.33311462	0.430368155	0.012494407	-0.55804718	-35.8377953
F310	EY	3	-5.40367985	14.33311462	0.430368155	0.012494407	-0.88082266	-46.5876083

F310	COMB1	0	14.81315708	56.83151627	0.021479245	0.061133265	0.055309881	151.4757843
F310	COMB1	0.75	14.81315708	67.13424683	0.021479245	0.061133265	0.039200481	105.8310623
F310	COMB1	1.5	14.81315708	90.91444397	0.021479245	0.061133265	0.02309108	47.40525436
F310	COMB1	2.25	14.81315708	114.6946487	0.021479245	0.061133265	0.006981678	-30.5403404
F310	COMB1	3	14.81315708	124.9973755	0.021479245	0.061133265	-0.00912772	-121.267006
F310	COMB2	0	8.198608398	41.94267654	-0.15051799	4.433261395	-0.22794281	101.0253067
F310	COMB2	0.75	8.198608398	49.43178558	-0.15051799	4.433261395	-0.11505456	67.30628204
F310	COMB2	1.5	8.198608398	65.66212463	-0.15051799	4.433261395	-0.00216629	24.69247627
F310	COMB2	2.25	8.198608398	81.89246368	-0.15051799	4.433261395	0.110721961	-31.1867104
F310	COMB2	3	8.198608398	89.38156891	-0.15051799	4.433261395	0.223610267	-95.9606705
F310	COMB3	0	4.084290028	52.64560699	0.369390786	1.468588591	0.341901451	98.27622986
F310	COMB3	0.75	4.084290028	60.13471603	0.369390786	1.468588591	0.064858884	56.53001785
F310	COMB3	1.5	4.084290028	76.36505127	0.369390786	1.468588591	-0.21218367	5.889030457
F310	COMB3	2.25	4.084290028	92.59539795	0.369390786	1.468588591	-0.48922622	-58.0173378
F310	COMB3	3	4.084290028	100.0845032	0.369390786	1.468588591	-0.76626873	-130.818481
F311	D	0	8.608580589	34.64777756	0.024949532	-1.71734071	0.081325024	92.51420593
F311	D	0.75	8.608580589	41.35839081	0.024949532	-1.71734071	0.062612914	64.47952271
F311	D	1.5	8.608580589	55.55023193	0.024949532	-1.71734071	0.043900799	28.6064415
F311	D	2.25	8.608580589	69.74208069	0.024949532	-1.71734071	0.025188688	-18.8456573
F311	D	3	8.608580589	76.45269012	0.024949532	-1.71734071	0.006476576	-74.1361618
F311	L	0	4.030601978	10.88311386	0.025714181	-0.56907374	0.047920156	34.44191742
F311	L	0.75	4.030601978	13.55498505	0.025714181	-0.56907374	0.028634563	25.6116333
F311	L	1.5	4.030601978	21.57059288	0.025714181	-0.56907374	0.009348966	12.77355194
F311	L	2.25	4.030601978	29.58620262	0.025714181	-0.56907374	-0.00993663	-6.74419165
F311	L	3	4.030601978	32.2580719	0.025714181	-0.56907374	-0.02922223	-30.2697315
F311	EX	0	-0.01418122	-0.63326049	-0.20274833	4.37120676	-0.36403474	-0.59519529
F311	EX	0.75	-0.01418122	-0.63326049	-0.20274833	4.37120676	-0.2119738	-0.12025087
F311	EX	1.5	-0.01418122	-0.63326049	-0.20274833	4.37120676	-0.05991285	0.354693562
F311	EX	2.25	-0.01418122	-0.63326049	-0.20274833	4.37120676	0.092148088	0.829637945
F311	EX	3	-0.01418122	-0.63326049	-0.20274833	4.37120676	0.244209021	1.304582357
F311	EY	0	-4.86692142	16.06787682	0.619054973	0.016095752	0.605691493	-3.96159863
F311	EY	0.75	-4.86692142	16.06787682	0.619054973	0.016095752	0.141401127	-16.0124817
F311	EY	1.5	-4.86692142	16.06787682	0.619054973	0.016095752	-0.32288918	-28.063364
F311	EY	2.25	-4.86692142	16.06787682	0.619054973	0.016095752	-0.78717947	-40.1142502
F311	EY	3	-4.86692142	16.06787682	0.619054973	0.016095752	-1.25146973	-52.1651306
F311	COMB1	0	16.77926064	58.9903183	0.07108213	-2.97132683	0.174262285	166.124115
F311	COMB1	0.75	16.77926064	71.31804657	0.07108213	-2.97132683	0.120950796	118.3540421
F311	COMB1	1.5	16.77926064	101.1732254	0.07108213	-2.97132683	0.067639306	54.76541519
F311	COMB1	2.25	16.77926064	131.0284119	0.07108213	-2.97132683	0.014327817	-33.4054947
F311	COMB1	3	16.77926064	143.3561401	0.07108213	-2.97132683	-0.03898368	-137.394958
F311	COMB2	0	8.760891914	44.21430588	0.019454768	2.546802998	-0.08549701	106.1251907
F311	COMB2	0.75	8.760891914	52.10208511	0.019454768	2.546802998	-0.10008808	70.60277557
F311	COMB2	1.5	8.760891914	69.52843475	0.019454768	2.546802998	-0.11467913	25.58758163
F311	COMB2	2.25	8.760891914	86.95478821	0.019454768	2.546802998	-0.12927018	-33.6896744
F311	COMB2	3	8.760891914	94.84256744	0.019454768	2.546802998	-0.14386123	-102.459709
F311	COMB3	0	5.19391489	56.48014069	0.620438993	-0.58863544	0.621791244	103.6419525
F311	COMB3	0.75	5.19391489	64.36791992	0.620438993	-0.58863544	0.156462893	58.92018127
F311	COMB3	1.5	5.19391489	81.79427338	0.620438993	-0.58863544	-0.30886543	4.705628872
F311	COMB3	2.25	5.19391489	99.22062683	0.620438993	-0.58863544	-0.7741937	-63.7709846
F311	COMB3	3	5.19391489	107.1084061	0.620438993	-0.58863544	-1.23952198	-141.740372
F312	D	0	6.281553268	11.70994759	0.094756536	12.51404381	0.21502687	70.99362946
F312	D	0.75	6.281553268	25.92054367	0.094756536	12.51404381	0.143959627	57.3497963
F312	D	1.5	6.281553268	47.61237335	0.094756536	12.51404381	0.07289236	30.24258423
F312	D	2.25	6.281553268	69.30419922	0.094756536	12.51404381	0.001825096	-14.0686197
F312	D	3	6.281553268	83.51480103	0.094756536	12.51404381	-0.06924216	-71.8432083
F312	L	0	3.042326689	3.944627762	0.042637993	4.489145279	0.088634171	21.82379532
F312	L	0.75	3.042326689	6.616497517	0.042637993	4.489145279	0.056655735	18.1973629
F312	L	1.5	3.042326689	14.63210678	0.042637993	4.489145279	0.02467731	10.5631361
F312	L	2.25	3.042326689	22.64771652	0.042637993	4.489145279	-0.00730112	-3.75075269
F312	L	3	3.042326689	25.31958389	0.042637993	4.489145279	-0.03927955	-22.0724373
F312	EX	0	0.306437939	0.75001967	-0.2349676	3.535585642	-0.44792974	2.015149593
F312	EX	0.75	0.306437939	0.75001967	-0.2349676	3.535585642	-0.27170441	1.452636123
F312	EX	1.5	0.306437939	0.75001967	-0.2349676	3.535585642	-0.09547905	0.890122473
F312	EX	2.25	0.306437939	0.75001967	-0.2349676	3.535585642	0.080746301	0.327608883
F312	EX	3	0.306437939	0.75001967	-0.2349676	3.535585642	0.256971657	-0.23490472
F312	EY	0	-4.83187389	16.83335686	0.211322352	0.002621278	0.194933414	-4.16384029
F312	EY	0.75	-4.83187389	16.83335686	0.211322352	0.002621278	0.036441967	-16.7888336
F312	EY	1.5	-4.83187389	16.83335686	0.211322352	0.002621278	-0.12204949	-29.4138279
F312	EY	2.25	-4.83187389	16.83335686	0.211322352	0.002621278	-0.28054094	-42.0388184
F312	EY	3	-4.83187389	16.83335686	0.211322352	0.002621278	-0.43903238	-54.6638107
F312	COMB1	0	12.40558624	20.36334038	0.181928635	22.19948578	0.399846911	120.1104279
F312	COMB1	0.75	12.40558624	41.69104767	0.181928635	22.19948578	0.263400733	97.93553925
F312	COMB1	1.5	12.40558624	80.54621887	0.181928635	22.19948578	0.126954526	53.1921196
F312	COMB1	2.25	12.40558624	119.4013901	0.181928635	22.19948578	-0.00949168	-22.8835487
F312	COMB1	3	12.40558624	140.7290955	0.181928635	22.19948578	-0.14593787	-121.527748
F312	COMB2	0	6.349086761	19.61677933	-0.0636996	18.21398354	-0.14850527	82.19187164
F312	COMB2	0.75	6.349086761	35.3795433	-0.0636996	18.21398354	-0.10073067	62.1644516
F312	COMB2	1.5	6.349086761	60.68088531	-0.0636996	18.21398354	-0.05295607	26.73802185
F312	COMB2	2.25	6.349086761	85.98222351	-0.0636996	18.21398354	-0.00518147	-28.8566914
F312	COMB2	3	6.349086761	101.7449875	-0.0636996	18.21398354	0.042593144	-99.8504105
F312	COMB3	0	2.577023983	31.4492836	0.260799021	15.67028904	0.317280203	77.68054199
F312	COMB3	0.75	2.577023983	47.21204758	0.260799021	15.67028904	0.12168134	48.77876282
F312	COMB3	1.5	2.577023983	72.51338959	0.260799021	15.67028904	-0.07391754	4.477971077
F312	COMB3	2.25	2.577023983	97.81472015	0.260799021	15.67028904	-0.26951638	-59.9911003

F312	COMB3	3	2.577023983	113.5774918	0.260799021	15.67028904	-0.46511525	-139.859177
F313	D	0	4.446059704	-47.6891098	-0.01064728	0.565736294	-0.01792988	-33.7192383
F313	D	1.25	4.446059704	-25.9438	-0.01064728	0.565736294	-0.00462078	13.3836937
F313	D	2.5	4.446059704	2.867132664	-0.01064728	0.565736294	0.008688324	27.9191761
F313	D	3.75	4.446059704	31.67806625	-0.01064728	0.565736294	0.021997424	6.215861797
F313	D	5	4.446059704	53.42337799	-0.01064728	0.565736294	0.035306528	-48.0548973
F313	L	0	1.769518614	-12.1935234	0.000486659	0.430862218	0.005766527	-9.46392632
F313	L	1.25	1.769518614	-8.28727245	0.000486659	0.430862218	0.005158203	4.150372982
F313	L	2.5	1.769518614	0.931477606	0.000486659	0.430862218	0.00454988	8.832380295
F313	L	3.75	1.769518614	10.15022755	0.000486659	0.430862218	0.003941556	1.821678996
F313	L	5	1.769518614	14.0564785	0.000486659	0.430862218	0.003333233	-14.121314
F313	EX	0	-19.7610054	19.98689461	-0.11234985	0.064261682	-0.35507059	53.20416641
F313	EX	1.25	-19.7610054	19.98689461	-0.11234985	0.064261682	-0.21463329	28.22054863
F313	EX	2.5	-19.7610054	19.98689461	-0.11234985	0.064261682	-0.07419597	3.236931562
F313	EX	3.75	-19.7610054	19.98689461	-0.11234985	0.064261682	0.066241346	-21.7466869
F313	EX	5	-19.7610054	19.98689461	-0.11234985	0.064261682	0.206678674	-46.7303047
F313	EY	0	-0.21302383	0.015738828	0.13883172	0.131459251	0.447282523	0.043960411
F313	EY	1.25	-0.21302383	0.015738828	0.13883172	0.131459251	0.273742884	0.024286877
F313	EY	2.5	-0.21302383	0.015738828	0.13883172	0.131459251	0.100203224	0.004613341
F313	EY	3.75	-0.21302383	0.015738828	0.13883172	0.131459251	-0.07333643	-0.0150602
F313	EY	5	-0.21302383	0.015738828	0.13883172	0.131459251	-0.24687609	-0.03473374
F313	COMB1	0	8.166501999	-76.7365723	-0.01199808	1.368263125	-0.01228941	-55.6053658
F313	COMB1	1.25	8.166501999	-44.3921967	-0.01199808	1.368263125	0.002708195	22.70102882
F313	COMB1	2.5	8.166501999	4.930923462	-0.01199808	1.368263125	0.017705796	47.63482285
F313	COMB1	3.75	8.166501999	54.25404358	-0.01199808	1.368263125	0.0327034	10.37372017
F313	COMB1	5	8.166501999	86.59841919	-0.01199808	1.368263125	0.047701005	-80.2599792
F313	COMB2	0	-15.2939825	-33.2231331	-0.08357646	0.8376652	-0.24361399	16.69382477
F313	COMB2	1.25	-15.2939825	-9.16008854	-0.08357646	0.8376652	-0.13914342	44.57616425
F313	COMB2	2.5	-15.2939825	23.99529839	-0.08357646	0.8376652	-0.03467286	35.44901276
F313	COMB2	3.75	-15.2939825	57.15068436	-0.08357646	0.8376652	0.069797702	-15.4120808
F313	COMB2	5	-15.2939825	81.21372986	-0.08357646	0.8376652	0.174268275	-103.282669
F313	COMB3	0	-1.22263074	-47.6021271	0.099356748	0.888019383	0.340789497	-21.580864
F313	COMB3	1.25	-1.22263074	-23.5390835	0.099356748	0.888019383	0.216593564	24.27522087
F313	COMB3	2.5	-1.22263074	9.61630249	0.099356748	0.888019383	0.092397608	33.12181473
F313	COMB3	3.75	-1.22263074	42.77169037	0.099356748	0.888019383	-0.03179834	0.234464109
F313	COMB3	5	-1.22263074	66.83473206	0.099356748	0.888019383	-0.1559943	-69.6623764
F314	D	0	3.824143648	-50.4996719	-0.00555268	-0.08040038	-0.00070391	-45.380703
F314	D	1.25	3.824143648	-28.7543602	-0.00555268	-0.08040038	0.006236938	5.235424995
F314	D	2.5	3.824143648	0.056573525	-0.00555268	-0.08040038	0.013177789	23.28410721
F314	D	3.75	3.824143648	28.86750603	-0.00555268	-0.08040038	0.020118641	5.09399128
F314	D	5	3.824143648	50.61281586	-0.00555268	-0.08040038	0.027059492	-45.6635704
F314	L	0	1.641700745	-13.1361609	0.001347338	-0.01438814	0.007506792	-13.3719702
F314	L	1.25	1.641700745	-9.22991085	0.001347338	-0.01438814	0.00582262	1.420627356
F314	L	2.5	1.641700745	-0.01116091	0.001347338	-0.01438814	0.004138447	7.280932903
F314	L	3.75	1.641700745	9.207589149	0.001347338	-0.01438814	0.002454275	1.448529601
F314	L	5	1.641700745	13.1138401	0.001347338	-0.01438814	0.000770103	-13.3161659
F314	EX	0	-15.6945543	16.99418068	-0.06702936	-0.01687052	-0.13614462	42.24711609
F314	EX	1.25	-15.6945543	16.99418068	-0.06702936	-0.01687052	-0.05235792	21.0043869
F314	EX	2.5	-15.6945543	16.99418068	-0.06702936	-0.01687052	0.031428773	-0.23834008
F314	EX	3.75	-15.6945543	16.99418068	-0.06702936	-0.01687052	0.115215465	-21.4810677
F314	EX	5	-15.6945543	16.99418068	-0.06702936	-0.01687052	0.199002162	-42.7237968
F314	EY	0	-0.83830822	0.02679565	0.396753281	0.290495276	0.943493187	0.068448611
F314	EY	1.25	-0.83830822	0.02679565	0.396753281	0.290495276	0.447551519	0.034954049
F314	EY	2.5	-0.83830822	0.02679565	0.396753281	0.290495276	-0.0483901	0.001459489
F314	EY	3.75	-0.83830822	0.02679565	0.396753281	0.290495276	-0.54433173	-0.03203507
F314	EY	5	-0.83830822	0.02679565	0.396753281	0.290495276	-1.04027331	-0.06552964
F314	COMB1	0	7.215693474	-81.6174622	-0.00450748	-0.11950147	0.01116617	-75.8519974
F314	COMB1	1.25	7.215693474	-49.2730904	-0.00450748	-0.11950147	0.016800517	8.555513382
F314	COMB1	2.5	7.215693474	0.050030772	-0.00450748	-0.11950147	0.022434862	39.59041977
F314	COMB1	3.75	7.215693474	49.37314987	-0.00450748	-0.11950147	0.028069209	8.430437088
F314	COMB1	5	7.215693474	81.71752167	-0.00450748	-0.11950147	0.033703554	-76.10215
F314	COMB2	0	-11.9754448	-39.5651245	0.050195999	-0.01490764	0.157916188	-8.11458302
F314	COMB2	1.25	-11.9754448	-15.5020819	0.050195999	-0.01490764	0.095171191	27.69524574
F314	COMB2	2.5	-11.9754448	17.65330505	0.050195999	-0.01490764	0.03242619	26.49558449
F314	COMB2	3.75	-11.9754448	50.80869293	0.050195999	-0.01490764	-0.03031882	-16.4380188
F314	COMB2	5	-11.9754448	74.87173462	0.050195999	-0.01490764	-0.09306382	-96.3811111
F314	COMB3	0	-1.29152179	-51.7812424	0.390070796	0.210753158	0.949407816	-38.4821968
F314	COMB3	1.25	-1.29152179	-27.7181969	0.390070796	0.210753158	0.461819261	12.59777737
F314	COMB3	2.5	-1.29152179	5.437189102	0.390070796	0.210753158	-0.02576925	26.66826248
F314	COMB3	3.75	-1.29152179	38.59257507	0.390070796	0.210753158	-0.51335776	-0.99519581
F314	COMB3	5	-1.29152179	62.65562057	0.390070796	0.210753158	-1.00094628	-65.6681442
F315	D	0	3.656820774	-50.4951096	5.21754E-05	-0.00074311	0.015292138	-45.0324249
F315	D	1.25	3.656820774	-28.7497959	5.21754E-05	-0.00074311	0.015226918	5.5779953
F315	D	2.5	3.656820774	0.061137509	5.21754E-05	-0.00074311	0.015161699	23.62097168
F315	D	3.75	3.656820774	28.87207222	5.21754E-05	-0.00074311	0.01509648	5.425151348
F315	D	5	3.656820774	50.61738205	5.21754E-05	-0.00074311	0.015031261	-45.3381157
F315	L	0	1.600974083	-13.0433731	0.000899743	0.01161826	0.004913761	-13.0365419
F315	L	1.25	1.600974083	-9.13712311	0.000899743	0.01161826	0.003789082	1.640070915
F315	L	2.5	1.600974083	0.081627108	0.000899743	0.01161826	0.002664403	7.384391785
F315	L	3.75	1.600974083	9.300377846	0.000899743	0.01161826	0.001539725	1.436003089
F315	L	5	1.600974083	13.20662689	0.000899743	0.01161826	0.000415046	-13.4446774
F315	EX	0	-11.9951611	17.17609215	0.208425865	0.097540818	0.505728066	42.96470261
F315	EX	1.25	-11.9951611	17.17609215	0.208425865	0.097540818	0.245195672	21.49458694
F315	EX	2.5	-11.9951611	17.17609215	0.208425865	0.097540818	-0.01533667	0.02446918

F315	EX	3.75	-11.9951611	17.17609215	0.208425865	0.097540818	-0.27586901	-21.4456463
F315	EX	5	-11.9951611	17.17609215	0.208425865	0.097540818	-0.53640133	-42.9157639
F315	EY	0	-1.27237833	-1.1557E-06	-2.5103E-05	2.18661E-07	-0.22916944	-0.00153293
F315	EY	1.25	-1.27237833	-1.1557E-06	-2.5103E-05	2.18661E-07	-0.22913806	-0.00153148
F315	EY	2.5	-1.27237833	-1.1557E-06	-2.5103E-05	2.18661E-07	-0.22910668	-0.00153004
F315	EY	3.75	-1.27237833	-1.1557E-06	-2.5103E-05	2.18661E-07	-0.22907533	-0.00152859
F315	EY	5	-1.27237833	-1.1557E-06	-2.5103E-05	2.18661E-07	-0.22904395	-0.00152715
F315	COMB1	0	6.949743271	-81.4635315	0.001502199	0.017697485	0.026212582	-74.897377
F315	COMB1	1.25	6.949743271	-49.1191521	0.001502199	0.017697485	0.024334833	9.317708015
F315	COMB1	2.5	6.949743271	0.203968391	0.001502199	0.017697485	0.022457084	40.1601944
F315	COMB1	3.75	6.949743271	49.52709198	0.001502199	0.017697485	0.020579334	8.807786942
F315	COMB1	5	6.949743271	81.87145996	0.001502199	0.017697485	0.018701587	-75.9172211
F315	COMB2	0	-8.47182274	-39.3512726	0.216051057	0.103834301	0.468844712	-6.922575
F315	COMB2	1.25	-8.47182274	-15.2882233	0.216051057	0.103834301	0.19878085	28.61993217
F315	COMB2	2.5	-8.47182274	17.8671627	0.216051057	0.103834301	-0.07128298	27.15294838
F315	COMB2	3.75	-8.47182274	51.02254868	0.216051057	0.103834301	-0.34134683	-16.0479755
F315	COMB2	5	-8.47182274	75.08559418	0.216051057	0.103834301	-0.61141068	-96.2583923
F315	COMB3	0	-0.77050447	-51.7180595	0.065965995	0.033605073	-0.063719	-37.8582878
F315	COMB3	1.25	-0.77050447	-27.6550102	0.065965995	0.033605073	-0.1461765	13.14270401
F315	COMB3	2.5	-0.77050447	5.500374794	0.065965995	0.033605073	-0.228634	27.13420486
F315	COMB3	3.75	-0.77050447	38.65576172	0.065965995	0.033605073	-0.31109151	-0.60823381
F315	COMB3	5	-0.77050447	62.71880722	0.065965995	0.033605073	-0.393549	-65.3601608
F316	D	0	3.751927853	-50.4535065	0.006102745	0.097613759	0.026283562	-45.3095322
F316	D	1.25	3.751927853	-28.7081966	0.006102745	0.097613759	0.018655131	5.248892307
F316	D	2.5	3.751927853	0.102736972	0.006102745	0.097613759	0.0110267	23.23987007
F316	D	3.75	3.751927853	28.91366959	0.006102745	0.097613759	0.003398268	4.992049694
F316	D	5	3.751927853	50.65898514	0.006102745	0.097613759	-0.00423016	-45.8232155
F316	L	0	1.62527144	-13.1070766	-0.00735329	0.279626757	-0.01504988	-13.3183975
F316	L	1.25	1.62527144	-9.20082569	-0.00735329	0.279626757	-0.00585827	1.437844634
F316	L	2.5	1.62527144	0.017923793	-0.00735329	0.279626757	0.003333344	7.261794567
F316	L	3.75	1.62527144	9.236674309	-0.00735329	0.279626757	0.012524958	1.393035173
F316	L	5	1.62527144	13.14292431	-0.00735329	0.279626757	0.02171657	-13.4080162
F316	EX	0	-8.48484898	16.88315392	-0.00533359	-0.01710491	-0.06736688	42.49136734
F316	EX	1.25	-8.48484898	16.88315392	-0.00533359	-0.01710491	-0.0606999	21.38742256
F316	EX	2.5	-8.48484898	16.88315392	-0.00533359	-0.01710491	-0.05403291	0.283478528
F316	EX	3.75	-8.48484898	16.88315392	-0.00533359	-0.01710491	-0.04736593	-20.8204651
F316	EX	5	-8.48484898	16.88315392	-0.00533359	-0.01710491	-0.04069895	-41.924408
F316	EY	0	-0.83828324	-0.02679791	-0.3967317	-0.29049763	-1.04020774	-0.06553534
F316	EY	1.25	-0.83828324	-0.02679791	-0.3967317	-0.29049763	-0.54429311	-0.03203795
F316	EY	2.5	-0.83828324	-0.02679791	-0.3967317	-0.29049763	-0.04837846	0.001459445
F316	EY	3.75	-0.83828324	-0.02679791	-0.3967317	-0.29049763	0.44753617	0.034956839
F316	EY	5	-0.83828324	-0.02679791	-0.3967317	-0.29049763	0.943450809	0.068454236
F316	COMB1	0	7.102747917	-81.5155334	-0.00444197	0.564539373	0.007460462	-75.6808701
F316	COMB1	1.25	7.102747917	-49.1711578	-0.00444197	0.564539373	0.013012927	8.599222183
F316	COMB1	2.5	7.102747917	0.151962444	-0.00444197	0.564539373	0.01856539	39.50671768
F316	COMB1	3.75	7.102747917	49.4750824	-0.00444197	0.564539373	0.024117853	8.219316483
F316	COMB1	5	7.102747917	81.81945801	-0.00444197	0.564539373	0.029670317	-76.4406891
F316	COMB2	0	-4.59439325	-39.6392899	-0.12639916	0.081366539	-0.37453315	-7.81238031
F316	COMB2	1.25	-4.59439325	-15.5762434	-0.12639916	0.081366539	-0.21653418	28.09014702
F316	COMB2	2.5	-4.59439325	17.57914352	-0.12639916	0.081366539	-0.05853524	26.98319054
F316	COMB2	3.75	-4.59439325	50.7345314	-0.12639916	0.081366539	0.099463701	-15.8577118
F316	COMB2	5	-4.59439325	74.7975769	-0.12639916	0.081366539	0.257462651	-95.708107
F316	COMB3	0	0.898559988	-51.8148575	-0.41415679	-0.11983369	-1.09058166	-38.4543343
F316	COMB3	1.25	0.898559988	-27.751812	-0.41415679	-0.11983369	-0.57288569	12.66765594
F316	COMB3	2.5	0.898559988	5.403575897	-0.41415679	-0.11983369	-0.05518971	26.78015709
F316	COMB3	3.75	0.898559988	38.55895996	-0.41415679	-0.11983369	0.462506264	-0.84128326
F316	COMB3	5	0.898559988	62.62200928	-0.41415679	-0.11983369	0.980202258	-65.4722137
F317	D	0	4.383277416	-53.447834	0.001921149	-0.18023947	0.012684588	-48.1539917
F317	D	1.25	4.383277416	-31.7025204	0.001921149	-0.18023947	0.010283153	6.147336006
F317	D	2.5	4.383277416	-2.89158678	0.001921149	-0.18023947	0.007881716	27.88121986
F317	D	3.75	4.383277416	25.91934776	0.001921149	-0.18023947	0.00548028	13.37630367
F317	D	5	4.383277416	47.66465759	0.001921149	-0.18023947	0.003078844	-33.6960602
F317	L	0	1.770556092	-13.9624996	-0.00284789	-0.27382216	-0.001598	-13.8789415
F317	L	1.25	1.770556092	-10.0562506	-0.00284789	-0.27382216	0.00196186	1.946579814
F317	L	2.5	1.770556092	-0.83749956	-0.00284789	-0.27382216	0.00552172	8.839808464
F317	L	3.75	1.770556092	8.381250381	-0.00284789	-0.27382216	0.00908158	4.040328979
F317	L	5	1.770556092	12.28750038	-0.00284789	-0.27382216	0.01264144	-9.69144344
F317	EX	0	-5.01221752	19.70734215	0.077762611	0.061596647	0.179741263	46.13833237
F317	EX	1.25	-5.01221752	19.70734215	0.077762611	0.061596647	0.082538009	21.50414848
F317	EX	2.5	-5.01221752	19.70734215	0.077762611	0.061596647	-0.01466526	-3.13003063
F317	EX	3.75	-5.01221752	19.70734215	0.077762611	0.061596647	-0.11186853	-27.7642117
F317	EX	5	-5.01221752	19.70734215	0.077762611	0.061596647	-0.20907179	-52.3983917
F317	EY	0	-0.2130184	-0.01574136	-0.13882904	-0.13145871	-0.24687329	-0.03473967
F317	EY	1.25	-0.2130184	-0.01574136	-0.13882904	-0.13145871	-0.073337	-0.01506297
F317	EY	2.5	-0.2130184	-0.01574136	-0.13882904	-0.13145871	0.10019929	0.004613735
F317	EY	3.75	-0.2130184	-0.01574136	-0.13882904	-0.13145871	0.273735583	0.024290441
F317	EY	5	-0.2130184	-0.01574136	-0.13882904	-0.13145871	0.447271883	0.043967146
F317	COMB1	0	8.092822075	-86.4774017	-0.00225124	-0.65440279	0.012664706	-79.9910965
F317	COMB1	1.25	8.092822075	-54.1330261	-0.00225124	-0.65440279	0.015478759	10.4913311
F317	COMB1	2.5	8.092822075	-4.80990362	-0.00225124	-0.65440279	0.018292811	47.60115814
F317	COMB1	3.75	8.092822075	44.51321793	-0.00225124	-0.65440279	0.021106863	22.51609039
F317	COMB1	5	8.092822075	76.85758972	-0.00225124	-0.65440279	0.023920918	-55.9415817
F317	COMB2	0	-0.0945797	-40.1262703	0.037873279	-0.25316238	0.121082574	-7.1913271
F317	COMB2	1.25	-0.0945797	-16.0632229	0.037873279	-0.25316238	0.073740982	29.31992531

F317	COMB2	2.5	-0.0945797	17.09216309	0.037873279	-0.25316238	0.026399378	28.82169151
F317	COMB2	3.75	-0.0945797	50.24755096	0.037873279	-0.25316238	-0.02094223	-13.4104862
F317	COMB2	5	-0.0945797	74.31059265	0.037873279	-0.25316238	-0.06828382	-92.652153
F317	COMB3	0	3.357648373	-54.3271255	-0.12015514	-0.39413413	-0.18978301	-40.4364586
F317	COMB3	1.25	3.357648373	-30.26408	-0.12015514	-0.39413413	-0.03958908	13.8258667
F317	COMB3	2.5	3.357648373	2.891306162	-0.12015514	-0.39413413	0.110604845	31.07870483
F317	COMB3	3.75	3.357648373	36.04669189	-0.12015514	-0.39413413	0.260798752	6.59760046
F317	COMB3	5	3.357648373	60.10974121	-0.12015514	-0.39413413	0.410992712	-54.8929939
F318	D	0	-28.2391949	-7.51305008	-1.61176324	0.019261137	2.025414228	-4.78049278
F318	D	0.730000019	-25.4359932	-7.51305008	-1.61176324	0.019261137	3.202000856	0.704031885
F318	D	1.460000038	-22.6327953	-7.51305008	-1.61176324	0.019261137	4.378587723	6.188556671
F318	L	0	0.117662698	0.012007793	-0.0763569	-0.00812899	-0.08885213	0.005439849
F318	L	0.730000019	0.117662698	0.012007793	-0.0763569	-0.00812899	-0.0331116	-0.00332584
F318	L	1.460000038	0.117662698	0.012007793	-0.0763569	-0.00812899	0.022628918	-0.01209152
F318	EX	0	2.594642401	4.18291378	1.788290739	-3.00690293	0.869331658	1.975438237
F318	EX	0.730000019	2.594642401	4.18291378	1.788290739	-3.00690293	-0.43612021	-1.07808793
F318	EX	1.460000038	2.594642401	4.18291378	1.788290739	-3.00690293	-1.74157202	-4.13161421
F318	EY	0	26.77819252	0.000967355	44.3970108	-0.01132035	19.63724899	0.000726552
F318	EY	0.730000019	26.77819252	0.000967355	44.3970108	-0.01132035	-12.7725649	2.03833E-05
F318	EY	1.460000038	26.77819252	0.000967355	44.3970108	-0.01132035	-45.1823769	-0.00068579
F318	COMB1	0	-33.6987724	-8.99644756	-2.05628681	0.010106984	2.288333654	-5.72788763
F318	COMB1	0.730000019	-30.3349323	-8.99644756	-2.05628681	0.010106984	3.789422512	0.839516938
F318	COMB1	1.460000038	-26.9710922	-8.99644756	-2.05628681	0.010106984	5.290511608	7.406921864
F318	COMB2	0	-18.4935055	-3.5553	14.11953545	-3.09804678	9.184187889	-2.97299671
F318	COMB2	0.730000019	-15.5501442	-3.5553	14.11953545	-3.09804678	-1.12307155	-0.37762874
F318	COMB2	1.460000038	-12.6067848	-3.5553	14.11953545	-3.09804678	-11.4303303	2.217739105
F318	COMB3	0	-0.67967647	-6.56628656	45.46377182	-0.94139719	22.99164581	-4.39477825
F318	COMB3	0.730000019	2.26368475	-6.56628656	45.46377182	-0.94139719	-10.1969004	0.398609549
F318	COMB3	1.460000038	5.207043648	-6.56628656	45.46377182	-0.94139719	-43.3854446	5.191997051
F319	D	0	-28.2555122	7.54486084	-1.61806881	-0.04056436	2.022822857	4.795761585
F319	D	0.730000019	-25.4523125	7.54486084	-1.61806881	-0.04056436	3.204012871	-0.71198565
F319	D	1.460000038	-22.6491146	7.54486084	-1.61806881	-0.04056436	4.385202408	-6.21973276
F319	L	0	0.094279021	0.013347236	-0.10443036	-0.01379372	-0.10365287	0.006124132
F319	L	0.730000019	0.094279021	0.013347236	-0.10443036	-0.01379372	-0.02741873	-0.00361935
F319	L	1.460000038	0.094279021	0.013347236	-0.10443036	-0.01379372	0.048815411	-0.01336283
F319	EX	0	-2.60269713	4.182932854	-1.80275381	-3.01093912	-0.87598783	1.975566268
F319	EX	0.730000019	-2.60269713	4.182932854	-1.80275381	-3.01093912	0.440022141	-1.07797396
F319	EX	1.460000038	-2.60269713	4.182932854	-1.80275381	-3.01093912	1.756032109	-4.13151407
F319	EY	0	26.77801132	-0.00091335	44.39674377	0.011310329	19.6371212	-0.0006878
F319	EY	0.730000019	26.77801132	-0.00091335	44.39674377	0.011310329	-12.7724943	-2.1052E-05
F319	EY	1.460000038	26.77801132	-0.00091335	44.39674377	0.011310329	-45.1821098	0.000645692
F319	COMB1	0	-33.7557678	9.075188637	-2.10877109	-0.07074718	2.261543036	5.764712811
F319	COMB1	0.730000019	-30.3919296	9.075188637	-2.10877109	-0.07074718	3.80094552	-0.8601737
F319	COMB1	1.460000038	-27.0280914	9.075188637	-2.10877109	-0.07074718	5.340347767	-7.48506021
F319	COMB2	0	-23.8973083	12.25535679	10.38725662	-3.15969682	7.370358944	7.081973553
F319	COMB2	0.730000019	-20.953949	12.25535679	10.38725662	-3.15969682	-0.21233617	-1.86443472
F319	COMB2	1.460000038	-18.0105896	12.25535679	10.38725662	-3.15969682	-7.79503155	-10.8108425
F319	COMB3	0	-2.34152699	9.242973328	44.31684494	-0.98350757	22.43435287	5.659060001
F319	COMB3	0.730000019	0.601832151	9.242973328	44.31684494	-0.98350757	-9.91693497	-1.08830893
F319	COMB3	1.460000038	3.545191288	9.242973328	44.31684494	-0.98350757	-42.2682228	-7.8356781
F320	D	0	-7.47500658	-9.90817928	-0.0096248	0.000457325	-0.05634085	-6.34586048
F320	D	1.25	-7.47500658	-4.958179	-0.0096248	0.000457325	-0.04430984	2.945613384
F320	D	2.5	-7.47500658	-0.00817874	-0.0096248	0.000457325	-0.03227884	6.049586773
F320	D	3.75	-7.47500658	4.941821098	-0.0096248	0.000457325	-0.02024784	2.966060162
F320	D	5	-7.47500658	9.891820908	-0.0096248	0.000457325	-0.00821683	-6.30496693
F320	L	0	0.005516146	-0.00697546	-0.00684159	0.001127172	-0.01943903	-0.01731445
F320	L	1.25	0.005516146	-0.00697546	-0.00684159	0.001127172	-0.01088704	-0.00859513
F320	L	2.5	0.005516146	-0.00697546	-0.00684159	0.001127172	-0.00233505	0.000124189
F320	L	3.75	0.005516146	-0.00697546	-0.00684159	0.001127172	0.006216937	0.008843509
F320	L	5	0.005516146	-0.00697546	-0.00684159	0.001127172	0.014768927	0.017562829
F320	EX	0	0.004395164	-2.176476	-2.46357822	0.183809504	-6.16063404	-5.44129229
F320	EX	1.25	0.004395164	-2.176476	-2.46357822	0.183809504	-3.08116078	-2.72069693
F320	EX	2.5	0.004395164	-2.176476	-2.46357822	0.183809504	-0.00168809	-0.00010192
F320	EX	3.75	0.004395164	-2.176476	-2.46357822	0.183809504	3.077784777	2.720493078
F320	EX	5	0.004395164	-2.176476	-2.46357822	0.183809504	6.157257557	5.4410882
F320	EY	0	-0.0239825	-7.2947E-06	-2.0707E-05	5.71394E-06	0.009506362	0.000199727
F320	EY	1.25	-0.0239825	-7.2947E-06	-2.0707E-05	5.71394E-06	0.009532247	0.000208846
F320	EY	2.5	-0.0239825	-7.2947E-06	-2.0707E-05	5.71394E-06	0.009558129	0.000217964
F320	EY	3.75	-0.0239825	-7.2947E-06	-2.0707E-05	5.71394E-06	0.009584013	0.000227083
F320	EY	5	-0.0239825	-7.2947E-06	-2.0707E-05	5.71394E-06	0.009609897	0.000236201
F320	COMB1	0	-8.96118164	-11.9009752	-0.02249631	0.002352265	-0.09871148	-7.64273548
F320	COMB1	1.25	-8.96118164	-5.96097517	-0.02249631	0.002352265	-0.07059108	3.520983934
F320	COMB1	2.5	-8.96118164	-0.02097521	-0.02249631	0.002352265	-0.04247069	7.259702682
F320	COMB1	3.75	-8.96118164	5.919024467	-0.02249631	0.002352265	-0.0143503	3.573421955
F320	COMB1	5	-8.96118164	11.859025	-0.02249631	0.002352265	0.013770086	-7.53785944
F320	COMB2	0	-7.8500247	-12.6584396	-2.56207108	0.191079885	-6.43854284	-12.3002815
F320	COMB2	1.25	-7.8500247	-7.46093988	-2.56207108	0.191079885	-3.23595357	0.274331123
F320	COMB2	2.5	-7.8500247	-2.26343989	-2.56207108	0.191079885	-0.03336468	6.352068424
F320	COMB2	3.75	-7.8500247	2.934060097	-2.56207108	0.191079885	3.169224262	5.932930946
F320	COMB2	5	-7.8500247	8.131560326	-2.56207108	0.191079885	6.37181282	-0.98308218
F320	COMB3	0	-7.87081623	-11.091383	-0.78831005	0.058741245	-1.9958992	-8.38240433
F320	COMB3	1.25	-7.87081623	-5.89388275	-0.78831005	0.058741245	-1.01051152	2.233386278
F320	COMB3	2.5	-7.87081623	-0.69638252	-0.78831005	0.058741245	-0.02512403	6.352302074
F320	COMB3	3.75	-7.87081623	4.501117229	-0.78831005	0.058741245	0.96026355	3.974342585

F320	COMB3	5	-7.87081623	9.698616982	-0.78831005	0.058741245	1.945651054	-4.90049219
F321	D	0	-1.62138796	-7.74097204	-0.03804344	-0.11640986	-0.02747797	-4.37904501
F321	D	1	-1.62138796	-3.78097248	-0.03804344	-0.11640986	0.010565469	1.381926537
F321	D	2	-1.62138796	0.179027185	-0.03804344	-0.11640986	0.048608907	3.18289876
F321	D	3	-1.62138796	4.139026642	-0.03804344	-0.11640986	0.086652346	1.023872137
F321	D	4	-1.62138796	8.09902668	-0.03804344	-0.11640986	0.124695785	-5.09515381
F321	L	0	-0.0831985	0.110687248	0.006491648	0.005471303	0.022897916	-0.02375609
F321	L	1	-0.0831985	0.110687248	0.006491648	0.005471303	0.01640627	-0.13444331
F321	L	2	-0.0831985	0.110687248	0.006491648	0.005471303	0.009914622	-0.24513055
F321	L	3	-0.0831985	0.110687248	0.006491648	0.005471303	0.003422975	-0.35581776
F321	L	4	-0.0831985	0.110687248	0.006491648	0.005471303	-0.00306867	-0.46650505
F321	EX	0	-0.67528749	0.41816625	4.178518295	1.309473991	9.164160728	1.557762504
F321	EX	1	-0.67528749	0.41816625	4.178518295	1.309473991	4.985642433	1.139596224
F321	EX	2	-0.67528749	0.41816625	4.178518295	1.309473991	0.807124138	0.721430123
F321	EX	3	-0.67528749	0.41816625	4.178518295	1.309473991	-3.37139416	0.303263873
F321	EX	4	-0.67528749	0.41816625	4.178518295	1.309473991	-7.54991245	-0.11490237
F321	EY	0	44.39699554	26.77818489	0.024949858	-0.00044958	0.020930244	45.18236923
F321	EY	1	44.39699554	26.77818489	0.024949858	-0.00044958	-0.00401961	18.40419006
F321	EY	2	44.39699554	26.77818489	0.024949858	-0.00044958	-0.02896947	-8.37399292
F321	EY	3	44.39699554	26.77818489	0.024949858	-0.00044958	-0.05391932	-35.1521721
F321	EY	4	44.39699554	26.77818489	0.024949858	-0.00044958	-0.07886918	-61.9303513
F321	COMB1	0	-2.07878327	-9.11206722	-0.03526549	-0.13093774	0.003663105	-5.29286385
F321	COMB1	1	-2.07878327	-4.36006737	-0.03526549	-0.13093774	0.038928594	1.443202496
F321	COMB1	2	-2.07878327	0.391932219	-0.03526549	-0.13093774	0.074194081	3.427269697
F321	COMB1	3	-2.07878327	5.143931866	-0.03526549	-0.13093774	0.109459572	0.659338176
F321	COMB1	4	-2.07878327	9.895931244	-0.03526549	-0.13093774	0.144725069	-6.86059237
F321	COMB2	0	11.55746555	0.774775743	4.294724941	1.234657049	9.469860077	11.23925018
F321	COMB2	1	11.55746555	4.932775497	4.294724941	1.234657049	5.175135136	8.385475159
F321	COMB2	2	11.55746555	9.09077549	4.294724941	1.234657049	0.880410552	1.373700142
F321	COMB2	3	11.55746555	13.24877453	4.294724941	1.234657049	-3.41431427	-9.79607296
F321	COMB2	4	11.55746555	17.40677452	4.294724941	1.234657049	-7.70903921	-25.1238461
F321	COMB3	0	44.67546463	20.15566063	1.304529905	0.291505337	2.887048244	43.32670212
F321	COMB3	1	44.67546463	24.31366158	1.304529905	0.291505337	1.582518458	21.09204483
F321	COMB3	2	44.67546463	28.47166061	1.304529905	0.291505337	0.277988613	-5.30061388
F321	COMB3	3	44.67546463	32.62966156	1.304529905	0.291505337	-1.02654123	-35.8512726
F321	COMB3	4	44.67546463	36.78765869	1.304529905	0.291505337	-2.33107114	-70.5599213
F322	D	0	-1.60844398	-7.74093342	0.069854625	0.126127675	0.096905202	-4.38474512
F322	D	1	-1.60844398	-3.78093386	0.069854625	0.126127675	0.027050592	1.376187921
F322	D	2	-1.60844398	0.179065526	0.069854625	0.126127675	-0.04280402	3.177121878
F322	D	3	-1.60844398	4.139065266	0.069854625	0.126127675	-0.11265863	1.01805687
F322	D	4	-1.60844398	8.099064827	0.069854625	0.126127675	-0.18251324	-5.10100746
F322	L	0	-0.09758876	0.101254478	0.018863382	0.003951621	0.033232756	-0.04768824
F322	L	1	-0.09758876	0.101254478	0.018863382	0.003951621	0.014369372	-0.14894271
F322	L	2	-0.09758876	0.101254478	0.018863382	0.003951621	-0.00449401	-0.2501972
F322	L	3	-0.09758876	0.101254478	0.018863382	0.003951621	-0.02335739	-0.35145164
F322	L	4	-0.09758876	0.101254478	0.018863382	0.003951621	-0.04222078	-0.4527061
F322	EX	0	0.660824358	-0.42622107	4.187328339	1.309777617	9.171572685	-1.57222259
F322	EX	1	0.660824358	-0.42622107	4.187328339	1.309777617	4.984244823	-1.14600146
F322	EX	2	0.660824358	-0.42622107	4.187328339	1.309777617	0.79691714	-0.7197805
F322	EX	3	0.660824358	-0.42622107	4.187328339	1.309777617	-3.39041066	-0.29355949
F322	EX	4	0.660824358	-0.42622107	4.187328339	1.309777617	-7.57773781	0.132661566
F322	EY	0	44.39676666	26.77802086	-0.02489585	0.000445965	-0.02081669	45.18211746
F322	EY	1	44.39676666	26.77802086	-0.02489585	0.000445965	0.004079158	18.40409851
F322	EY	2	44.39676666	26.77802086	-0.02489585	0.000445965	0.028975008	-8.37392044
F322	EY	3	44.39676666	26.77802086	-0.02489585	0.000445965	0.053870857	-35.1519394
F322	EY	4	44.39676666	26.77802086	-0.02489585	0.000445965	0.078766704	-61.9299545
F322	COMB1	0	-2.08627486	-9.12711334	0.114006959	0.157675788	0.169458658	-5.33799553
F322	COMB1	1	-2.08627486	-4.37511349	0.114006959	0.157675788	0.055451706	1.41311717
F322	COMB1	2	-2.08627486	0.376885802	0.114006959	0.157675788	-0.05855523	3.41223073
F322	COMB1	3	-2.08627486	5.128885269	0.114006959	0.157675788	-0.17256218	0.659345627
F322	COMB1	4	-2.08627486	9.880885124	0.114006959	0.157675788	-0.28656912	-6.84553862
F322	COMB2	0	12.94932747	-0.1021473	4.405331612	1.48943913	9.598238945	7.986111641
F322	COMB2	1	12.94932747	4.055852413	4.405331612	1.48943913	5.19290781	6.009259701
F322	COMB2	2	12.94932747	8.213851929	4.405331612	1.48943913	0.787576556	-0.12559178
F322	COMB2	3	12.94932747	12.37185097	4.405331612	1.48943913	-3.6177547	-10.4184427
F322	COMB2	4	12.94932747	16.52985001	4.405331612	1.48943913	-8.02308559	-24.8692913
F322	COMB3	0	45.10515594	19.88657761	1.372157097	0.546727002	2.979406595	42.32696533
F322	COMB3	1	45.10515594	24.04457664	1.372157097	0.546727002	1.607249737	20.36139297
F322	COMB3	2	45.10515594	28.20257568	1.372157097	0.546727002	0.235092819	-5.76218128
F322	COMB3	3	45.10515594	32.36057663	1.372157097	0.546727002	-1.1370641	-36.0437546
F322	COMB3	4	45.10515594	36.51857376	1.372157097	0.546727002	-2.50922084	-70.4833221
F323	D	0	5.853761673	-9.8634634	-0.01517246	-0.0009365	-0.07878265	-6.87742138
F323	D	1.25	5.853761673	-4.91346407	-0.01517246	-0.0009365	-0.05981707	2.35815835
F323	D	2.5	5.853761673	0.036536369	-0.01517246	-0.0009365	-0.04085149	5.406238079
F323	D	3.75	5.853761673	4.986536503	-0.01517246	-0.0009365	-0.02188592	2.266817331
F323	D	5	5.853761673	9.936536789	-0.01517246	-0.0009365	-0.00292034	-7.06010342
F323	L	0	-0.03254761	0.03411505	-0.0119466	-9.5277E-05	-0.03905834	0.089442886
F323	L	1.25	-0.03254761	0.03411505	-0.0119466	-9.5277E-05	-0.0241251	0.046799071
F323	L	2.5	-0.03254761	0.03411505	-0.0119466	-9.5277E-05	-0.00919185	0.004155259
F323	L	3.75	-0.03254761	0.03411505	-0.0119466	-9.5277E-05	0.005741396	-0.03848855
F323	L	5	-0.03254761	0.03411505	-0.0119466	-9.5277E-05	0.020674642	-0.08113237
F323	EX	0	0.002120543	9.830327034	-3.9901588	-0.1639185	-9.98187542	24.57491112
F323	EX	1.25	0.002120543	9.830327034	-3.9901588	-0.1639185	-4.99417639	12.28700161
F323	EX	2.5	0.002120543	9.830327034	-3.9901588	-0.1639185	-0.00647751	-0.00090758

F326	COMB3	4	-290.250488	-10.1378288	-4.01310444	0.2478773	4.852425575	19.0713768
F327	D	0	-448.001556	1.155724883	-20.3253803	0.327802598	-41.9951973	2.739552736
F327	D	2	-440.321533	1.155724883	-20.3253803	0.327802598	-1.34443927	0.428102851
F327	D	4	-432.641541	1.155724883	-20.3253803	0.327802598	39.30631638	-1.88334692
F327	L	0	-75.2941971	0.248047009	-6.4435668	-0.02460206	-13.3204937	0.650663316
F327	L	2	-75.2941971	0.248047009	-6.4435668	-0.02460206	-0.43336058	0.154569387
F327	L	4	-75.2941971	0.248047009	-6.4435668	-0.02460206	12.45377159	-0.34152457
F327	EX	0	-5.03218269	21.29191017	0.187938839	-0.14941567	0.219685227	41.42669296
F327	EX	2	-5.03218269	21.29191017	0.187938839	-0.14941567	-0.15619241	-1.15712273
F327	EX	4	-5.03218269	21.29191017	0.187938839	-0.14941567	-0.53207004	-43.7409401
F327	EY	0	18.96240997	-0.12432733	12.55733967	-0.44972557	23.22377014	-0.22667962
F327	EY	2	18.96240997	-0.12432733	12.55733967	-0.44972557	-1.89090693	0.021975014
F327	EY	4	18.96240997	-0.12432733	12.55733967	-0.44972557	-27.0055847	0.270629674
F327	COMB1	0	-658.072571	1.78374505	-34.7001648	0.353999853	-71.7070236	4.32852459
F327	COMB1	2	-648.856567	1.78374505	-34.7001648	0.353999853	-2.30670404	0.761034429
F327	COMB1	4	-639.640564	1.78374505	-34.7001648	0.353999853	67.09361267	-2.80645561
F327	COMB2	0	-493.354431	23.28960991	-19.2212944	0.040134318	-40.7480507	45.88671494
F327	COMB2	2	-485.290436	23.28960991	-19.2212944	0.040134318	-2.30546474	-0.6925025
F327	COMB2	4	-477.22644	23.28960991	-19.2212944	0.040134318	36.13711929	-47.2717171
F327	COMB3	0	-475.793884	7.86805439	-10.1269655	-0.18283468	-23.8367538	15.89288425
F327	COMB3	2	-467.729889	7.86805439	-10.1269655	-0.18283468	-3.5828228	0.156777456
F327	COMB3	4	-459.665894	7.86805439	-10.1269655	-0.18283468	16.67110634	-15.5793285
F328	D	0	-448.820282	-1.12292349	-20.4365273	-0.33031258	-42.2348061	-2.63204932
F328	D	2	-441.140289	-1.12292349	-20.4365273	-0.33031258	-1.36175573	-0.38620266
F328	D	4	-433.460297	-1.12292349	-20.4365273	-0.33031258	39.51129532	1.859644175
F328	L	0	-94.0893555	-0.22708972	-8.5381403	0.022122288	-17.663269	-0.57013851
F328	L	2	-94.0893555	-0.22708972	-8.5381403	0.022122288	-0.58698952	-0.11595915
F328	L	4	-94.0893555	-0.22708972	-8.5381403	0.022122288	16.48928833	0.338220239
F328	EX	0	4.829362869	21.08795929	-0.18742906	-0.09735286	-0.21937855	41.03541946
F328	EX	2	4.829362869	21.08795929	-0.18742906	-0.09735286	0.155479506	-1.14049399
F328	EX	4	4.829362869	21.08795929	-0.18742906	-0.09735286	0.530337572	-43.3164063
F328	EY	0	18.96240616	0.124319427	12.55734348	0.44973439	23.22377586	0.226665094
F328	EY	2	18.96240616	0.124319427	12.55734348	0.44973439	-1.89090848	-0.02197373
F328	EY	4	18.96240616	0.124319427	12.55734348	0.44973439	-27.0055923	-0.27061257
F328	COMB1	0	-689.127319	-1.71085179	-38.1848564	-0.36097944	-78.9430008	-4.07068062
F328	COMB1	2	-679.911316	-1.71085179	-38.1848564	-0.36097944	-2.57329011	-0.64897782
F328	COMB1	4	-670.695313	-1.71085179	-38.1848564	-0.36097944	73.79641724	2.772725344
F328	COMB2	0	-489.927887	20.61459541	-20.3862934	-0.29895356	-42.8220444	39.59981155
F328	COMB2	2	-481.863892	20.61459541	-20.3862934	-0.29895356	-2.04946017	-1.62937284
F328	COMB2	4	-473.799896	20.61459541	-20.3862934	-0.29895356	38.72312546	-42.8585587
F328	COMB3	0	-479.467651	5.522639275	-11.021697	0.101695277	-25.5946178	10.22091007
F328	COMB3	2	-471.403656	5.522639275	-11.021697	0.101695277	-3.55122304	-0.82436794
F328	COMB3	4	-463.339661	5.522639275	-11.021697	0.101695277	18.49217224	-11.8696461
F329	D	0	-337.779846	12.58226204	-19.4372902	-0.46683255	-39.9723434	25.71892166
F329	D	2	-330.099823	12.58226204	-19.4372902	-0.46683255	-1.09776711	0.554399967
F329	D	4	-322.41983	12.58226204	-19.4372902	-0.46683255	37.77680588	-24.6101227
F329	L	0	-63.6522331	2.564091682	-6.33966017	0.033039022	-13.1645918	5.417945862
F329	L	2	-63.6522331	2.564091682	-6.33966017	0.033039022	-0.48527351	0.289762765
F329	L	4	-63.6522331	2.564091682	-6.33966017	0.033039022	12.19404507	-4.83842039
F329	EX	0	-27.2005901	12.49771786	-0.52444714	-0.32161307	-1.03186631	23.11808205
F329	EX	2	-27.2005901	12.49771786	-0.52444714	-0.32161307	0.017027888	-1.87735152
F329	EX	4	-27.2005901	12.49771786	-0.52444714	-0.32161307	1.065922022	-26.8727837
F329	EY	0	19.86435699	0.005183108	13.32731056	0.116089053	24.58575249	0.006138747
F329	EY	2	19.86435699	0.005183108	13.32731056	0.116089053	-2.06886458	-0.00422747
F329	EY	4	19.86435699	0.005183108	13.32731056	0.116089053	-28.723484	-0.01459368
F329	COMB1	0	-507.179382	19.20126152	-33.4682045	-0.50733662	-69.030159	39.53142166
F329	COMB1	2	-497.963379	19.20126152	-33.4682045	-0.50733662	-2.09375811	1.128900409
F329	COMB1	4	-488.747375	19.20126152	-33.4682045	-0.50733662	64.84263611	-37.2736206
F329	COMB2	0	-396.614624	26.95583344	-18.7508469	-0.77606833	-39.4412727	52.64067078
F329	COMB2	2	-388.550629	26.95583344	-18.7508469	-0.77606833	-1.93958509	-1.27099514
F329	COMB2	4	-380.486633	26.95583344	-18.7508469	-0.77606833	35.56210327	-55.1826591
F329	COMB3	0	-362.429901	17.96128654	-8.577672	-0.45918149	-20.6278019	36.00016403
F329	COMB3	2	-354.365906	17.96128654	-8.577672	-0.45918149	-3.47246075	0.077590682
F329	COMB3	4	-346.30188	17.96128654	-8.577672	-0.45918149	13.68287754	-35.8449821
F330	D	0	-473.596527	-15.6953573	1.033153892	0.342419475	2.50830102	-34.0242004
F330	D	2	-465.916534	-15.6953573	1.033153892	0.342419475	0.441993356	-2.63348913
F330	D	4	-458.236542	-15.6953573	1.033153892	0.342419475	-1.62431431	28.75722313
F330	L	0	-72.4025345	-4.45422792	0.226016432	-0.04299324	0.565242529	-9.4035759
F330	L	2	-72.4025345	-4.45422792	0.226016432	-0.04299324	0.113209724	-0.49512085
F330	L	4	-72.4025345	-4.45422792	0.226016432	-0.04299324	-0.33882311	8.413334846
F330	EX	0	28.51377296	14.57581806	0.345802963	-0.15818357	0.66013509	26.93360901
F330	EX	2	28.51377296	14.57581806	0.345802963	-0.15818357	-0.03147075	-2.21802425
F330	EX	4	28.51377296	14.57581806	0.345802963	-0.15818357	-0.72307658	-31.3696575
F330	EY	0	-2.99447036	0.095572442	21.37210083	-0.03708607	41.67209244	0.204592556
F330	EY	2	-2.99447036	0.095572442	21.37210083	-0.03708607	-1.07210374	0.013447696
F330	EY	4	-2.99447036	0.095572442	21.37210083	-0.03708607	-43.8162994	-0.17769715
F330	COMB1	0	-684.159912	-25.9611931	1.601410985	0.34211421	3.914349318	-55.8747635
F330	COMB1	2	-674.943909	-25.9611931	1.601410985	0.34211421	0.711527586	-3.95238018
F330	COMB1	4	-665.727905	-25.9611931	1.601410985	0.34211421	-2.49129415	47.97000122
F330	COMB2	0	-491.514648	-2.76713037	8.246124268	0.170595467	16.62171745	-10.7468052
F330	COMB2	2	-483.450653	-2.76713037	8.246124268	0.170595467	0.129469186	-5.21254539
F330	COMB2	4	-475.386658	-2.76713037	8.246124268	0.170595467	-16.3627777	0.321714133
F330	COMB3	0	-514.245544	-13.191474	23.70564079	0.257229388	46.7754097	-29.9886284
F330	COMB3	2	-506.181519	-13.191474	23.70564079	0.257229388	-0.63586807	-3.60568404

F330	COMB3	4	-498.117523	-13.191474	23.70564079	0.257229388	-48.047142	22.77725983
F331	D	0	-626.436829	-0.13926558	1.66954422	0.279485524	3.927079916	-0.47562373
F331	D	2	-618.756775	-0.13926558	1.66954422	0.279485524	0.587991595	-0.19709262
F331	D	4	-611.076782	-0.13926558	1.66954422	0.279485524	-2.75109673	0.081438489
F331	L	0	-161.146454	0.935643494	0.372000635	-0.03077741	0.963016629	2.193108797
F331	L	2	-161.146454	0.935643494	0.372000635	-0.03077741	0.21901539	0.321822077
F331	L	4	-161.146454	0.935643494	0.372000635	-0.03077741	-0.52498579	-1.5494647
F331	EX	0	-1.51209235	24.18762207	0.348038971	-0.07689985	0.65156281	46.65288162
F331	EX	2	-1.51209235	24.18762207	0.348038971	-0.07689985	-0.04451509	-1.72236276
F331	EX	4	-1.51209235	24.18762207	0.348038971	-0.07689985	-0.74059296	-50.0976028
F331	EY	0	-3.17394996	0.109598838	20.36599922	-0.25136214	39.75331116	0.230962604
F331	EY	2	-3.17394996	0.109598838	20.36599922	-0.25136214	-0.97868681	0.01176496
F331	EY	4	-3.17394996	0.109598838	20.36599922	-0.25136214	-41.7106781	-0.2074327
F331	COMB1	0	-1009.55847	1.329910874	2.59865427	0.286138773	6.253322601	2.938225508
F331	COMB1	2	-1000.34247	1.329910874	2.59865427	0.286138773	1.056014538	0.278404146
F331	COMB1	4	-991.126526	1.329910874	2.59865427	0.286138773	-4.14129305	-2.38141727
F331	COMB2	0	-711.084595	25.21721268	8.645711899	0.124994509	17.6234436	48.54990768
F331	COMB2	2	-703.020569	25.21721268	8.645711899	0.124994509	0.332021534	-1.8845129
F331	COMB2	4	-694.956604	25.21721268	8.645711899	0.124994509	-16.9594002	-52.3189316
F331	COMB3	0	-712.328735	7.882678986	23.36413383	-0.00438877	46.3730011	15.1295929
F331	COMB3	2	-704.264709	7.882678986	23.36413383	-0.00438877	-0.3552624	-0.63576436
F331	COMB3	4	-696.200745	7.882678986	23.36413383	-0.00438877	-47.0835228	-16.4011211
F332	D	0	-292.392731	6.433284283	2.427814245	0.357295126	5.728408813	5.130709171
F332	D	2	-284.712738	6.433284283	2.427814245	0.357295126	0.872781038	-7.73585844
F332	D	4	-277.032776	6.433284283	2.427814245	0.357295126	-3.98284698	-20.6024265
F332	L	0	-70.5186157	2.90796566	0.539066434	-0.03949419	1.404514074	3.929631472
F332	L	2	-70.5186157	2.90796566	0.539066434	-0.03949419	0.326381207	-1.88629949
F332	L	4	-70.5186157	2.90796566	0.539066434	-0.03949419	-0.7517516	-7.70223045
F332	EX	0	-26.2083206	19.3125782	0.453788131	-0.17111956	0.916913211	40.69590759
F332	EX	2	-26.2083206	19.3125782	0.453788131	-0.17111956	0.009337084	2.070750713
F332	EX	4	-26.2083206	19.3125782	0.453788131	-0.17111956	-0.89823908	-36.5544014
F332	EY	0	-5.20766115	0.083961122	16.26393318	-0.2358755	31.81965828	0.191240638
F332	EY	2	-5.20766115	0.083961122	16.26393318	-0.2358755	-0.70820439	0.023318402
F332	EY	4	-5.20766115	0.083961122	16.26393318	-0.2358755	-33.2360649	-0.14460382
F332	COMB1	0	-463.70108	12.37268639	3.775883436	0.365563422	9.121313095	12.44426155
F332	COMB1	2	-454.485077	12.37268639	3.775883436	0.365563422	1.569547176	-12.3011093
F332	COMB1	4	-445.269104	12.37268639	3.775883436	0.365563422	-5.98221874	-37.0464783
F332	COMB2	0	-357.99176	27.68592453	8.31182003	0.111309685	17.42944908	48.80558014
F332	COMB2	2	-349.927765	27.68592453	8.31182003	0.111309685	0.805809677	-6.5662632
F332	COMB2	4	-341.8638	27.68592453	8.31182003	0.111309685	-15.8178291	-61.9381065
F332	COMB3	0	-342.949402	13.84257889	19.9390831	0.061147269	40.15671921	19.64509201
F332	COMB3	2	-334.885406	13.84257889	19.9390831	0.061147269	0.278556734	-8.04006481
F332	COMB3	4	-326.821442	13.84257889	19.9390831	0.061147269	-39.5996056	-35.7252197
F333	D	0	-291.531372	-6.22543144	2.427999258	-0.36637655	5.728441715	-4.61225176
F333	D	2	-283.85141	-6.22543144	2.427999258	-0.36637655	0.872443497	7.838610172
F333	D	4	-276.171417	-6.22543144	2.427999258	-0.36637655	-3.98355484	20.28947067
F333	L	0	-73.3416595	-2.96638823	0.551046014	0.031337406	1.431338668	-3.9002409
F333	L	2	-73.3416595	-2.96638823	0.551046014	0.031337406	0.329246819	2.032534838
F333	L	4	-73.3416595	-2.96638823	0.551046014	0.031337406	-0.77284509	7.965310574
F333	EX	0	26.01666832	19.04984474	-0.46128899	-0.14412802	-0.932401	40.15949631
F333	EX	2	26.01666832	19.04984474	-0.46128899	-0.14412802	-0.00982304	2.059809208
F333	EX	4	26.01666832	19.04984474	-0.46128899	-0.14412802	0.912754893	-36.0398788
F333	EY	0	-5.20765829	-0.08396424	16.26390839	0.235864639	31.81962776	-0.19124645
F333	EY	2	-5.20765829	-0.08396424	16.26390839	0.235864639	-0.70818675	-0.02331799
F333	EY	4	-5.20765829	-0.08396424	16.26390839	0.235864639	-33.2360039	0.144610479
F333	COMB1	0	-467.184326	-12.2167387	3.795272827	-0.389512	9.164272308	-11.7750874
F333	COMB1	2	-457.968353	-12.2167387	3.795272827	-0.389512	1.573727131	12.65838814
F333	COMB1	4	-448.75235	-12.2167387	3.795272827	-0.389512	-6.01681805	37.09186172
F333	COMB2	0	-303.923737	12.21902561	7.368676186	-0.44969922	15.52388287	35.43339539
F333	COMB2	2	-295.859772	12.21902561	7.368676186	-0.44969922	0.78653276	10.99534702
F333	COMB2	4	-287.795746	12.21902561	7.368676186	-0.44969922	-13.9508181	-13.4427032
F333	COMB3	0	-326.483368	-1.5585767	19.65477753	-0.17256653	39.58263779	6.37799263
F333	COMB3	2	-318.419373	-1.5585767	19.65477753	-0.17256653	0.273088127	9.495144844
F333	COMB3	4	-310.355377	-1.5585767	19.65477753	-0.17256653	-39.0364647	12.61229706
F334	D	0	-628.552795	0.057542671	1.680547714	-0.2851319	3.959209204	0.386059076
F334	D	2	-620.872803	0.057542671	1.680547714	-0.2851319	0.598114133	0.270973742
F334	D	4	-613.19281	0.057542671	1.680547714	-0.2851319	-2.76298118	0.155888423
F334	L	0	-202.252884	-1.04197979	0.506561816	0.02530179	1.299234748	-2.33163762
F334	L	2	-202.252884	-1.04197979	0.506561816	0.02530179	0.286111176	-0.24767822
F334	L	4	-202.252884	-1.04197979	0.506561816	0.02530179	-0.72701234	1.83628118
F334	EX	0	1.439165711	23.92080498	-0.34228605	-0.0463146	-0.64138669	46.14316177
F334	EX	2	1.439165711	23.92080498	-0.34228605	-0.0463146	0.043185301	-1.69843876
F334	EX	4	1.439165711	23.92080498	-0.34228605	-0.0463146	0.727757335	-49.5400429
F334	EY	0	-3.17394876	-0.10960312	20.36600113	0.251366109	39.75330734	-0.2309709
F334	EY	2	-3.17394876	-0.10960312	20.36600113	0.251366109	-0.97869039	-0.0117647
F334	EY	4	-3.17394876	-0.10960312	20.36600113	0.251366109	-41.7106857	0.207441509
F334	COMB1	0	-1077.86792	-1.5981164	2.827156305	-0.30167541	6.829826355	-3.26734924
F334	COMB1	2	-1068.65198	-1.5981164	2.827156305	-0.30167541	1.175514817	-0.07111666
F334	COMB1	4	-1059.43591	-1.5981164	2.827156305	-0.30167541	-4.47879696	3.12511611
F334	COMB2	0	-723.200317	24.45570374	7.98516655	-0.26017371	16.4248848	47.3563118
F334	COMB2	2	-715.136353	24.45570374	7.98516655	-0.26017371	0.45455417	-1.55508626
F334	COMB2	4	-707.072327	24.45570374	7.98516655	-0.26017371	-15.5157766	-50.4664879
F334	COMB3	0	-726.569397	7.152166367	23.20062256	-0.04207312	46.10536194	13.96347332
F334	COMB3	2	-718.505371	7.152166367	23.20062256	-0.04207312	-0.29587668	-0.34085736

F334	COMB3	4	-710.441406	7.152166367	23.20062256	-0.04207312	-46.6971169	-14.6451883
F335	D	0	-533.909485	15.41549969	1.222402692	-0.35005286	2.980937958	33.55968475
F335	D	2	-526.229431	15.41549969	1.222402692	-0.35005286	0.536132753	2.728688955
F335	D	4	-518.549438	15.41549969	1.222402692	-0.35005286	-1.90867245	-28.1023064
F335	L	0	-137.281494	4.459021568	0.435680687	0.034721918	1.090177417	9.498390198
F335	L	2	-137.281494	4.459021568	0.435680687	0.034721918	0.218816057	0.58034867
F335	L	4	-137.281494	4.459021568	0.435680687	0.034721918	-0.65254521	-8.33769321
F335	EX	0	-28.248703	14.51230717	-0.34018812	-0.09347118	-0.64747834	26.87964439
F335	EX	2	-28.248703	14.51230717	-0.34018812	-0.09347118	0.032897852	-2.14496922
F335	EX	4	-28.248703	14.51230717	-0.34018812	-0.09347118	0.713274062	-31.1695824
F335	EY	0	-2.99446869	-0.0955749	21.37210846	0.037084792	41.67211151	-0.20459664
F335	EY	2	-2.99446869	-0.0955749	21.37210846	0.037084792	-1.07210493	-0.01344688
F335	EY	4	-2.99446869	-0.0955749	21.37210846	0.037084792	-43.8163185	0.177702889
F335	COMB1	0	-860.341736	25.63303375	2.163972378	-0.36450836	5.321409225	55.46904373
F335	COMB1	2	-851.125732	25.63303375	2.163972378	-0.36450836	0.993465006	4.20298481
F335	COMB1	4	-841.909729	25.63303375	2.163972378	-0.36450836	-3.33447933	-47.063076
F335	COMB2	0	-634.029297	32.58099747	7.800881863	-0.44167909	15.92996502	65.98564148
F335	COMB2	2	-625.965271	32.58099747	7.800881863	-0.44167909	0.328202695	0.823654413
F335	COMB2	4	-617.901245	32.58099747	7.800881863	-0.44167909	-15.2735596	-64.3383331
F335	COMB3	0	-615.891113	22.06188965	23.75431633	-0.34712249	47.0251503	46.48192215
F335	COMB3	2	-607.827148	22.06188965	23.75431633	-0.34712249	-0.48348084	2.358148813
F335	COMB3	4	-599.763123	22.06188965	23.75431633	-0.34712249	-47.9921112	-41.765625
F336	D	0	-462.880676	-15.6388254	0.016966544	-0.35357153	-0.04440945	-33.9126511
F336	D	2	-455.200684	-15.6388254	0.016966544	-0.35357153	-0.07834253	-2.63500285
F336	D	4	-447.520691	-15.6388254	0.016966544	-0.35357153	-0.11227562	28.64264488
F336	L	0	-70.6579742	-4.47913027	0.044297677	0.04204686	0.072669446	-9.45740128
F336	L	2	-70.6579742	-4.47913027	0.044297677	0.04204686	-0.0159259	-0.49914101
F336	L	4	-70.6579742	-4.47913027	0.044297677	0.04204686	-0.10452124	8.459118843
F336	EX	0	27.33530807	12.54362011	0.351037979	0.019597761	0.669214129	21.74463272
F336	EX	2	27.33530807	12.54362011	0.351037979	0.019597761	-0.03286173	-3.34260559
F336	EX	4	27.33530807	12.54362011	0.351037979	0.019597761	-0.73493761	-28.429842
F336	EY	0	0.159365818	0.04136689	20.41243744	-0.04532631	39.57687759	0.088547006
F336	EY	2	0.159365818	0.04136689	20.41243744	-0.04532631	-1.24799383	0.005813236
F336	EY	4	0.159365818	0.04136689	20.41243744	-0.04532631	-42.0728645	-0.07692054
F336	COMB1	0	-668.509583	-25.9331989	0.091236137	-0.35701084	0.06297978	-55.8270226
F336	COMB1	2	-659.293579	-25.9331989	0.091236137	-0.35701084	-0.11949248	-3.96062922
F336	COMB1	4	-650.077576	-25.9331989	0.091236137	-0.35701084	-0.30196473	47.90576553
F336	COMB2	0	-479.939728	-4.8360157	6.825010777	-0.35199943	13.1356144	-16.0537777
F336	COMB2	2	-471.875732	-4.8360157	6.825010777	-0.35199943	-0.51440626	-6.3817482
F336	COMB2	4	-463.811737	-4.8360157	6.825010777	-0.35199943	-14.1644258	3.290282011
F336	COMB3	0	-499.504028	-13.8370171	21.57540512	-0.39942467	41.74278641	-31.6448307
F336	COMB3	2	-491.440033	-13.8370171	21.57540512	-0.39942467	-1.40802133	-3.97079945
F336	COMB3	4	-483.376038	-13.8370171	21.57540512	-0.39942467	-44.5588264	23.70323181
F337	D	0	-612.72644	-0.00853169	0.079780921	-0.25249878	0.027096648	-0.19181022
F337	D	2	-605.046448	-0.00853169	0.079780921	-0.25249878	-0.13246517	-0.17474684
F337	D	4	-597.366455	-0.00853169	0.079780921	-0.25249878	-0.292027	-0.15768346
F337	L	0	-158.294525	0.963234603	0.063636519	0.037148118	0.08909934	2.258241415
F337	L	2	-158.294525	0.963234603	0.063636519	0.037148118	-0.03817369	0.331772476
F337	L	4	-158.294525	0.963234603	0.063636519	0.037148118	-0.16544671	-1.59469664
F337	EX	0	-1.32807958	22.59969711	0.290148944	0.012376611	0.541627944	42.83094788
F337	EX	2	-1.32807958	22.59969711	0.290148944	0.012376611	-0.0386699	-2.36843657
F337	EX	4	-1.32807958	22.59969711	0.290148944	0.012376611	-0.61896777	-47.5678253
F337	EY	0	0.129999846	0.056748018	19.41991234	-0.23479465	37.69814682	0.116734095
F337	EY	2	0.129999846	0.056748018	19.41991234	-0.23479465	-1.14167321	0.003238075
F337	EY	4	0.129999846	0.056748018	19.41991234	-0.23479465	-39.9814911	-0.11025795
F337	COMB1	0	-988.542969	1.530937314	0.197555527	-0.24356154	0.17507492	3.383014202
F337	COMB1	2	-979.326965	1.530937314	0.197555527	-0.24356154	-0.22003612	0.321139753
F337	COMB1	4	-970.110962	1.530937314	0.197555527	-0.24356154	-0.61514717	-2.74073482
F337	COMB2	0	-694.559143	23.703022	6.521391869	-0.31457257	12.4920187	44.87675095
F337	COMB2	2	-686.495117	23.703022	6.521391869	-0.31457257	-0.55076355	-2.52928782
F337	COMB2	4	-678.431152	23.703022	6.521391869	-0.31457257	-13.5935459	-49.9353256
F337	COMB3	0	-693.507385	7.472950459	20.5861187	-0.49605781	39.81018448	14.12426567
F337	COMB3	2	-685.443359	7.472950459	20.5861187	-0.49605781	-1.36205101	-0.8216334
F337	COMB3	4	-677.379395	7.472950459	20.5861187	-0.49605781	-42.5342865	-15.7675323
F338	D	0	-278.176819	6.501852036	0.141563237	-0.34536386	-0.14830819	5.290556431
F338	D	2	-270.496826	6.501852036	0.141563237	-0.34536386	-0.43143463	-7.71314621
F338	D	4	-262.816833	6.501852036	0.141563237	-0.34536386	-0.71456105	-20.7168484
F338	L	0	-67.330368	2.912334681	0.061782103	0.04288049	-0.02558067	3.945325613
F338	L	2	-67.330368	2.912334681	0.061782103	0.04288049	-0.14914487	-1.87934291
F338	L	4	-67.330368	2.912334681	0.061782103	0.04288049	-0.27270907	-7.70401144
F338	EX	0	-25.8003292	18.20100594	0.619202971	0.031283464	1.114462495	37.68822861
F338	EX	2	-25.8003292	18.20100594	0.619202971	0.031283464	-0.12394329	1.286217928
F338	EX	4	-25.8003292	18.20100594	0.619202971	0.031283464	-1.36234915	-35.1157951
F338	EY	0	0.137161925	0.046565671	15.49576664	-0.22084813	30.17234421	0.101043418
F338	EY	2	0.137161925	0.046565671	15.49576664	-0.22084813	-0.81918466	0.007912081
F338	EY	4	0.137161925	0.046565671	15.49576664	-0.22084813	-31.8107147	-0.08521925
F338	COMB1	0	-441.540771	12.46195793	0.268727243	-0.34582785	-0.21889889	12.66118908
F338	COMB1	2	-432.324768	12.46195793	0.268727243	-0.34582785	-0.75635338	-12.2627239
F338	COMB1	4	-423.108795	12.46195793	0.268727243	-0.34582785	-1.29380774	-37.1866379
F338	COMB2	0	-339.954865	26.59704018	5.690144062	-0.38631347	10.49397564	45.83700943
F338	COMB2	2	-331.890869	26.59704018	5.690144062	-0.38631347	-0.88631147	-7.35706854
F338	COMB2	4	-323.826874	26.59704018	5.690144062	-0.38631347	-12.2665987	-60.5511436
F338	COMB3	0	-321.277802	13.52654076	16.63370705	-0.57116091	31.86823654	18.77574921
F338	COMB3	2	-313.213806	13.52654076	16.63370705	-0.57116091	-1.39917302	-8.2773304

F338	COMB3	4	-305.149811	13.52654076	16.63370705	-0.57116091	-34.666584	-35.33041
F339	D	0	-277.278839	-6.27536154	0.138121307	0.343114316	-0.15383787	-4.7285943
F339	D	2	-269.598816	-6.27536154	0.138121307	0.343114316	-0.43008047	7.822126865
F339	D	4	-261.918823	-6.27536154	0.138121307	0.343114316	-0.70632309	20.37284851
F339	L	0	-69.9793777	-2.94755054	0.059247203	-0.04428182	-0.02714328	-3.86337256
F339	L	2	-69.9793777	-2.94755054	0.059247203	-0.04428182	-0.14563766	2.031727791
F339	L	4	-69.9793777	-2.94755054	0.059247203	-0.04428182	-0.26413205	7.926828861
F339	EX	0	25.73882484	17.81209946	-0.62397563	0.055567216	-1.12413979	36.95859909
F339	EX	2	25.73882484	17.81209946	-0.62397563	0.055567216	0.123811394	1.334402561
F339	EX	4	25.73882484	17.81209946	-0.62397563	0.055567216	1.371762514	-34.2897911
F339	EY	0	0.13716276	-0.04656491	15.49573803	0.220838323	30.17229652	-0.10104188
F339	EY	2	0.13716276	-0.04656491	15.49573803	0.220838323	-0.81917596	-0.00791208
F339	EY	4	0.13716276	-0.04656491	15.49573803	0.220838323	-31.8106499	0.085217737
F339	COMB1	0	-444.701599	-12.2465153	0.260541081	0.340886265	-0.22803469	-11.8557091
F339	COMB1	2	-435.485596	-12.2465153	0.260541081	0.340886265	-0.74911684	12.6373167
F339	COMB1	4	-426.269592	-12.2465153	0.260541081	0.340886265	-1.27019894	37.13034439
F339	COMB2	0	-286.503387	10.90324593	4.39903307	0.473397404	8.170708656	32.03833771
F339	COMB2	2	-278.439392	10.90324593	4.39903307	0.473397404	-0.62735599	10.23184204
F339	COMB2	4	-270.375397	10.90324593	4.39903307	0.473397404	-9.42542076	-11.5746479
F339	COMB3	0	-304.934509	-1.95569026	16.23766327	0.595705152	31.15672684	5.353878975
F339	COMB3	2	-296.870514	-1.95569026	16.23766327	0.595705152	-1.31859457	9.265256882
F339	COMB3	4	-288.806519	-1.95569026	16.23766327	0.595705152	-33.7939186	13.17663765
F340	D	0	-614.675598	-0.03999017	0.078268245	0.251556307	0.022052893	0.171315476
F340	D	2	-606.995605	-0.03999017	0.078268245	0.251556307	-0.13448358	0.251295775
F340	D	4	-599.315613	-0.03999017	0.078268245	0.251556307	-0.29102004	0.331276119
F340	L	0	-198.236877	-1.03782678	0.062535316	-0.03765643	0.077348776	-2.33094597
F340	L	2	-198.236877	-1.03782678	0.062535316	-0.03765643	-0.04772185	-0.25529236
F340	L	4	-198.236877	-1.03782678	0.062535316	-0.03765643	-0.17279248	1.820361018
F340	EX	0	1.428472161	22.6836853	-0.29008624	0.024570744	-0.54128253	43.13195801
F340	EX	2	1.428472161	22.6836853	-0.29008624	0.024570744	0.038889874	-2.23540807
F340	EX	4	1.428472161	22.6836853	-0.29008624	0.024570744	0.619062304	-47.6027756
F340	EY	0	0.129999608	-0.05674728	19.41991234	0.234798014	37.69814301	-0.11673278
F340	EY	2	0.129999608	-0.05674728	19.41991234	0.234798014	-1.14167678	-0.00323821
F340	EY	4	0.129999608	-0.05674728	19.41991234	0.234798014	-39.9814949	0.110256344
F340	COMB1	0	-1054.78967	-1.70851111	0.193978399	0.241617277	0.150221512	-3.52393484
F340	COMB1	2	-1045.57373	-1.70851111	0.193978399	0.241617277	-0.23773526	-0.10691281
F340	COMB1	4	-1036.35767	-1.70851111	0.193978399	0.241617277	-0.62569201	3.3101089
F340	COMB2	0	-706.334534	23.09083366	5.918912888	0.351664424	11.36220741	44.05043793
F340	COMB2	2	-698.270569	23.09083366	5.918912888	0.351664424	-0.47561729	-2.13122392
F340	COMB2	4	-690.206543	23.09083366	5.918912888	0.351664424	-12.3134422	-48.3128891
F340	COMB3	0	-707.267517	6.716871262	20.40141106	0.506550074	39.46006775	12.90963078
F340	COMB3	2	-699.203491	6.716871262	20.40141106	0.506550074	-1.34275043	-0.52411014
F340	COMB3	4	-691.139526	6.716871262	20.40141106	0.506550074	-42.1455688	-13.9578514
F341	D	0	-521.627014	15.38359451	0.011762795	0.352270663	-0.06817089	33.5030098
F341	D	2	-513.947021	15.38359451	0.011762795	0.352270663	-0.09169648	2.7358253
F341	D	4	-506.267029	15.38359451	0.011762795	0.352270663	-0.11522207	-28.0313606
F341	L	0	-133.770142	4.501531601	0.040396128	-0.04314837	0.049172647	9.590719223
F341	L	2	-133.770142	4.501531601	0.040396128	-0.04314837	-0.0316196	0.587657273
F341	L	4	-133.770142	4.501531601	0.040396128	-0.04314837	-0.11241186	-8.41540527
F341	EX	0	-27.3733387	13.29619598	-0.34261888	0.02399784	-0.65278029	23.61154366
F341	EX	2	-27.3733387	13.29619598	-0.34261888	0.02399784	0.032457352	-2.98084545
F341	EX	4	-27.3733387	13.29619598	-0.34261888	0.02399784	0.717694998	-29.5732327
F341	EY	0	0.159365907	-0.04136621	20.41244698	0.045325264	39.57689285	-0.08854569
F341	EY	2	0.159365907	-0.04136621	20.41244698	0.045325264	-1.24799526	-0.00581328
F341	EY	4	0.159365907	-0.04136621	20.41244698	0.045325264	-42.0728836	0.076919124
F341	COMB1	0	-839.98468	25.6627636	0.078749157	0.353687376	-0.00312883	55.54876328
F341	COMB1	2	-830.768677	25.6627636	0.078749157	0.353687376	-0.16062714	4.223241806
F341	COMB1	4	-821.552673	25.6627636	0.078749157	0.353687376	-0.31812546	-47.1022797
F341	COMB2	0	-618.127197	31.31928825	6.100385666	0.395407677	11.73500443	62.60929489
F341	COMB2	2	-610.063171	31.31928825	6.100385666	0.395407677	-0.46576661	-0.02927769
F341	COMB2	4	-601.999207	31.31928825	6.100385666	0.395407677	-12.6665373	-62.6678467
F341	COMB3	0	-598.30127	21.71562386	21.35021973	0.411443293	41.29402542	45.54390335
F341	COMB3	2	-590.237244	21.71562386	21.35021973	0.411443293	-1.40641236	2.112658262
F341	COMB3	4	-582.173218	21.71562386	21.35021973	0.411443293	-44.1068459	-41.3185844
F342	D	0	-457.761017	-14.6662903	0.04712956	-0.24534811	0.085328445	-30.194025
F342	D	2	-450.081024	-14.6662903	0.04712956	-0.24534811	-0.00893067	-0.8614468
F342	D	4	-442.401001	-14.6662903	0.04712956	-0.24534811	-0.10318978	28.47113037
F342	L	0	-70.8140182	-4.91290331	0.041185252	0.033520773	0.086394854	-10.2452974
F342	L	2	-70.8140182	-4.91290331	0.041185252	0.033520773	0.004024354	-0.41949099
F342	L	4	-70.8140182	-4.91290331	0.041185252	0.033520773	-0.07834615	9.406315804
F342	EX	0	27.97852707	14.6993084	0.347285509	0.067395464	0.65533179	26.6372776
F342	EX	2	27.97852707	14.6993084	0.347285509	0.067395464	-0.03923915	-2.76133442
F342	EX	4	27.97852707	14.6993084	0.347285509	0.067395464	-0.73381007	-32.1599464
F342	EY	0	-0.02428398	0.000913322	20.39126587	-0.04770432	39.57219696	0.001866506
F342	EY	2	-0.02428398	0.000913322	20.39126587	-0.04770432	-1.21032703	3.98617E-05
F342	EY	4	-0.02428398	0.000913322	20.39126587	-0.04770432	-41.9928513	-0.00178678
F342	COMB1	0	-662.615662	-25.4601936	0.122451879	-0.2407845	0.240625888	-52.6253052
F342	COMB1	2	-653.399658	-25.4601936	0.122451879	-0.2407845	-0.00427784	-1.70492172
F342	COMB1	4	-644.183655	-25.4601936	0.122451879	-0.2407845	-0.24918157	49.21546173
F342	COMB2	0	-474.005341	-1.73309791	6.845148563	-0.19232903	13.26031971	-7.36082554
F342	COMB2	2	-465.941345	-1.73309791	6.845148563	-0.19232903	-0.42997503	-3.89462733
F342	COMB2	4	-457.87735	-1.73309791	6.845148563	-0.19232903	-14.1202698	-0.42843148
F342	COMB3	0	-494.167725	-12.3159285	21.58268356	-0.27591643	41.87404633	-26.5382938
F342	COMB3	2	-486.103729	-12.3159285	21.58268356	-0.27591643	-1.29131317	-1.90643728

F346	COMB3	4	-679.178833	5.459868431	20.56583977	0.379795909	-42.4128494	-11.9711838
F347	D	0	-516.569397	14.4093132	0.045105133	0.246458828	0.081489086	29.77185249
F347	D	2	-508.889404	14.4093132	0.045105133	0.246458828	-0.00872116	0.953229964
F347	D	4	-501.209412	14.4093132	0.045105133	0.246458828	-0.09893142	-27.8653946
F347	L	0	-133.992462	4.936515331	0.040777642	-0.03173017	0.085808121	10.36506081
F347	L	2	-133.992462	4.936515331	0.040777642	-0.03173017	0.004252845	0.492031783
F347	L	4	-133.992462	4.936515331	0.040777642	-0.03173017	-0.07730243	-9.38099766
F347	EX	0	-27.5976582	14.5402422	-0.33873397	-0.12091728	-0.64012057	26.34642601
F347	EX	2	-27.5976582	14.5402422	-0.33873397	-0.12091728	0.03734725	-2.73405576
F347	EX	4	-27.5976582	14.5402422	-0.33873397	-0.12091728	0.71481508	-31.814539
F347	EY	0	-0.02428532	-0.00091116	20.39127541	0.047704786	39.57221985	-0.00186249
F347	EY	2	-0.02428532	-0.00091116	20.39127541	0.047704786	-1.21032822	-4.0181E-05
F347	EY	4	-0.02428532	-0.00091116	20.39127541	0.047704786	-41.9928741	0.001782129
F347	COMB1	0	-834.27124	25.18959999	0.119370386	0.244982317	0.235079899	52.31032181
F347	COMB1	2	-825.055237	25.18959999	0.119370386	0.244982317	-0.00366085	1.931126833
F347	COMB1	4	-815.839233	25.18959999	0.119370386	0.244982317	-0.2424016	-48.4480705
F347	COMB2	0	-613.176697	31.73364449	6.132867813	0.138664395	11.91531754	61.79340363
F347	COMB2	2	-605.112732	31.73364449	6.132867813	0.138664395	-0.35041657	-1.67387903
F347	COMB2	4	-597.048706	31.73364449	6.132867813	0.138664395	-12.6161499	-65.1411667
F347	COMB3	0	-593.32428	21.26399994	21.36434364	0.260787845	41.46178436	42.82260895
F347	COMB3	2	-585.260254	21.26399994	21.36434364	0.260787845	-1.26689792	0.294611692
F347	COMB3	4	-577.196228	21.26399994	21.36434364	0.260787845	-43.9955788	-42.233387
F348	D	0	-456.603638	-14.6878061	0.046960756	0.002831567	0.148232937	-30.1388264
F348	D	2	-448.923645	-14.6878061	0.046960756	0.002831567	0.054311428	-0.76321578
F348	D	4	-441.243652	-14.6878061	0.046960756	0.002831567	-0.03961008	28.61239433
F348	L	0	-70.7786331	-4.9093132	0.050720308	0.0012397	0.120111294	-10.2247982
F348	L	2	-70.7786331	-4.9093132	0.050720308	0.0012397	0.018670691	-0.40617409
F348	L	4	-70.7786331	-4.9093132	0.050720308	0.0012397	-0.08276992	9.412449837
F348	EX	0	27.85170746	14.63319397	0.340170473	0.039699703	0.645877957	26.63703156
F348	EX	2	27.85170746	14.63319397	0.340170473	0.039699703	-0.03446293	-2.62935424
F348	EX	4	27.85170746	14.63319397	0.340170473	0.039699703	-0.71480381	-31.8957386
F348	EY	0	-0.17386603	0.000164468	20.24660301	-0.05456312	39.2532959	0.000341598
F348	EY	2	-0.17386603	0.000164468	20.24660301	-0.05456312	-1.23990428	1.26616E-05
F348	EY	4	-0.17386603	0.000164468	20.24660301	-0.05456312	-41.7331047	-0.00031628
F348	COMB1	0	-661.170166	-25.4802685	0.137505397	0.005381401	0.370057583	-52.526268
F348	COMB1	2	-651.954163	-25.4802685	0.137505397	0.005381401	0.095046818	-1.56573749
F348	COMB1	4	-642.73822	-25.4802685	0.137505397	0.005381401	-0.17996396	49.39479446
F348	COMB2	0	-472.957336	-1.82322276	6.795042038	0.027265459	13.22675228	-7.29714489
F348	COMB2	2	-464.893341	-1.82322276	6.795042038	0.027265459	-0.36333069	-3.65069914
F348	COMB2	4	-456.829346	-1.82322276	6.795042038	0.027265459	-13.953413	-0.00425322
F348	COMB3	0	-493.138367	-12.3590012	21.4313736	-0.04142222	41.61289215	-26.4755554
F348	COMB3	2	-485.074371	-12.3590012	21.4313736	-0.04142222	-1.24984705	-1.75755465
F348	COMB3	4	-477.010376	-12.3590012	21.4313736	-0.04142222	-44.112587	22.96044731
F349	D	0	-598.76886	1.602037787	0.147041112	0.018694736	0.358924359	3.612137079
F349	D	2	-591.088867	1.602037787	0.147041112	0.018694736	0.064842157	0.408061862
F349	D	4	-583.408875	1.602037787	0.147041112	0.018694736	-0.22924004	-2.79601336
F349	L	0	-153.817368	0.298803061	0.067289807	0.003540064	0.162062213	0.798671007
F349	L	2	-153.817368	0.298803061	0.067289807	0.003540064	0.027482623	0.201064944
F349	L	4	-153.817368	0.298803061	0.067289807	0.003540064	-0.10709698	-0.39654112
F349	EX	0	-6.08033323	23.74003601	0.303532034	0.036171749	0.55970639	45.9372139
F349	EX	2	-6.08033323	23.74003601	0.303532034	0.036171749	-0.04735764	-1.54285598
F349	EX	4	-6.08033323	23.74003601	0.303532034	0.036171749	-0.65442163	-49.0229225
F349	EY	0	-0.18452926	0.000231981	19.26985359	-0.22003372	37.40401459	0.000665907
F349	EY	2	-0.18452926	0.000231981	19.26985359	-0.22003372	-1.13568699	0.000201946
F349	EY	4	-0.18452926	0.000231981	19.26985359	-0.22003372	-39.6753922	-0.00026201
F349	COMB1	0	-964.630432	2.400530338	0.28411302	0.028097786	0.690008759	5.612438202
F349	COMB1	2	-955.414429	2.400530338	0.28411302	0.028097786	0.121782787	0.811378121
F349	COMB1	4	-946.198425	2.400530338	0.28411302	0.028097786	-0.44644323	-3.98968172
F349	COMB2	0	-683.511047	26.34727287	6.559749126	-0.01112827	12.78948116	51.58955002
F349	COMB2	2	-675.447021	26.34727287	6.559749126	-0.01112827	-0.33001527	-1.10499191
F349	COMB2	4	-667.383057	26.34727287	6.559749126	-0.01112827	-13.4495125	-53.7995338
F349	COMB3	0	-679.268799	9.254617691	20.50454903	-0.19889671	39.87844467	18.51524544
F349	COMB3	2	-671.204834	9.254617691	20.50454903	-0.19889671	-1.13064766	0.006012806
F349	COMB3	4	-663.140808	9.254617691	20.50454903	-0.19889671	-42.13974	-18.5032215
F350	D	0	-531.920471	0.319217026	0.564537585	0.009570991	0.874587238	0.500325501
F350	D	2	-524.240479	0.319217026	0.564537585	0.009570991	-0.25448778	-0.13810851
F350	D	4	-516.560486	0.319217026	0.564537585	0.009570991	-1.3835628	-0.77654248
F350	L	0	-151.386078	0.125479206	0.162556559	0.004536535	0.242027313	0.243538082
F350	L	2	-151.386078	0.125479206	0.162556559	0.004536535	-0.0830858	-0.0074203
F350	L	4	-151.386078	0.125479206	0.162556559	0.004536535	-0.40819892	-0.25837868
F350	EX	0	-0.27108192	22.87784386	0.411322266	-0.00231859	0.752010465	44.10095596
F350	EX	2	-0.27108192	22.87784386	0.411322266	-0.00231859	-0.07063404	-1.65472567
F350	EX	4	-0.27108192	22.87784386	0.411322266	-0.00231859	-0.89327854	-47.410408
F350	EY	0	-0.33191028	0.000120121	16.02876091	-0.17212051	31.19104576	0.000411141
F350	EY	2	-0.33191028	0.000120121	16.02876091	-0.17212051	-0.86647183	0.0001709
F350	EY	4	-0.33191028	0.000120121	16.02876091	-0.17212051	-32.9239883	-6.9342E-05
F350	COMB1	0	-880.522339	0.583827138	0.937535584	0.018743645	1.436748385	0.990051568
F350	COMB1	2	-871.306335	0.583827138	0.937535584	0.018743645	-0.4383226	-0.17760268
F350	COMB1	4	-862.090332	0.583827138	0.937535584	0.018743645	-2.31339359	-1.34525692
F350	COMB2	0	-606.588257	24.05331039	6.118747711	-0.04513915	11.59806538	46.2466774
F350	COMB2	2	-598.524231	24.05331039	6.118747711	-0.04513915	-0.63942903	-1.8599385
F350	COMB2	4	-590.460266	24.05331039	6.118747711	-0.04513915	-12.8769236	-49.9665527
F350	COMB3	0	-606.637024	7.58135128	17.60373497	-0.16997834	33.98203659	14.4942894
F350	COMB3	2	-598.573059	7.58135128	17.60373497	-0.16997834	-1.2254293	-0.66841042

F350	COMB3	4	-590.509033	7.58135128	17.60373497	-0.16997834	-36.4328957	-15.83111
F351	D	0	-531.465088	-0.03843023	0.563667417	-0.00754591	0.873586178	0.107428528
F351	D	2	-523.785095	-0.03843023	0.563667417	-0.00754591	-0.2537486	0.184288964
F351	D	4	-516.105103	-0.03843023	0.563667417	-0.00754591	-1.38108337	0.261149436
F351	L	0	-152.906693	-0.07845066	0.164309293	-0.00244787	0.250383288	-0.08586382
F351	L	2	-152.906693	-0.07845066	0.164309293	-0.00244787	-0.07823524	0.071037486
F351	L	4	-152.906693	-0.07845066	0.164309293	-0.00244787	-0.40685377	0.227938801
F351	EX	0	0.096039794	22.82897758	-0.41553915	-0.00534679	-0.76048917	44.00576019
F351	EX	2	0.096039794	22.82897758	-0.41553915	-0.00534679	0.070589095	-1.65219128
F351	EX	4	0.096039794	22.82897758	-0.41553915	-0.00534679	0.901667297	-47.3101425
F351	EY	0	-0.33190924	-0.00011955	16.02872276	0.172119066	31.19096756	-0.00041004
F351	EY	2	-0.33190924	-0.00011955	16.02872276	0.172119066	-0.86647511	-0.00017093
F351	EY	4	-0.33190924	-0.00011955	16.02872276	0.172119066	-32.9239197	6.81764E-05
F351	COMB1	0	-882.408813	-0.17163733	0.939295769	-0.01297169	1.448916674	-0.00846788
F351	COMB1	2	-873.19281	-0.17163733	0.939295769	-0.01297169	-0.42967471	0.33480674
F351	COMB1	4	-863.976807	-0.17163733	0.939295769	-0.01297169	-2.30826616	0.678081393
F351	COMB2	0	-606.209106	23.56289101	5.262572765	0.039989293	10.03418446	45.63158417
F351	COMB2	2	-598.145142	23.56289101	5.262572765	0.039989293	-0.49096006	-1.49419165
F351	COMB2	4	-590.081116	23.56289101	5.262572765	0.039989293	-11.0161057	-48.6199684
F351	COMB3	0	-606.522217	7.125938416	17.34287262	0.170346498	33.50709534	13.94713688
F351	COMB3	2	-598.458191	7.125938416	17.34287262	0.170346498	-1.17864347	-0.30473951
F351	COMB3	4	-590.394226	7.125938416	17.34287262	0.170346498	-35.8643875	-14.5566158
F352	D	0	-600.648621	-1.66470397	0.146299496	-0.01730813	0.360002518	-3.66004562
F352	D	2	-592.968628	-1.66470397	0.146299496	-0.01730813	0.067403562	-0.33065823
F352	D	4	-585.288635	-1.66470397	0.146299496	-0.01730813	-0.22519539	2.998769283
F352	L	0	-193.465744	-0.3971118	0.06950888	-0.0020151	0.177179933	-0.92052472
F352	L	2	-193.465744	-0.3971118	0.06950888	-0.0020151	0.038162172	-0.12630118
F352	L	4	-193.465744	-0.3971118	0.06950888	-0.0020151	-0.10085558	0.667922318
F352	EX	0	5.871647835	23.56710243	-0.30338478	0.03811603	-0.55957097	45.60712051
F352	EX	2	5.871647835	23.56710243	-0.30338478	0.03811603	0.047198556	-1.52707887
F352	EX	4	5.871647835	23.56710243	-0.30338478	0.03811603	0.653968036	-48.6612778
F352	EY	0	-0.18452892	-0.00023145	19.26985359	0.220036775	37.40401077	-0.00066492
F352	EY	2	-0.18452892	-0.00023145	19.26985359	0.220036775	-1.13569117	-0.00020202
F352	EY	4	-0.18452892	-0.00023145	19.26985359	0.220036775	-39.675396	0.000260876
F352	COMB1	0	-1030.32361	-2.63302374	0.286773592	-0.02399392	0.715490878	-5.86489439
F352	COMB1	2	-1021.10754	-2.63302374	0.286773592	-0.02399392	0.141943753	-0.59884781
F352	COMB1	4	-1011.89154	-2.63302374	0.286773592	-0.02399392	-0.4316034	4.667198658
F352	COMB2	0	-685.60376	22.51884842	5.931510448	0.089953378	11.63692188	43.07014465
F352	COMB2	2	-677.539734	22.51884842	5.931510448	0.089953378	-0.22609739	-1.96754527
F352	COMB2	4	-669.475769	22.51884842	5.931510448	0.089953378	-12.0891171	-47.0052376
F352	COMB3	0	-689.96698	5.550364494	20.31328964	0.224236861	39.53176117	10.23253155
F352	COMB3	2	-681.902954	5.550364494	20.31328964	0.224236861	-1.09481335	-0.86819696
F352	COMB3	4	-673.838989	5.550364494	20.31328964	0.224236861	-41.7213898	-11.9689255
F353	D	0	-515.327942	14.42635727	0.047982544	-0.00092323	0.164066777	29.70680618
F353	D	2	-507.647949	14.42635727	0.047982544	-0.00092323	0.068101689	0.854092896
F353	D	4	-499.967957	14.42635727	0.047982544	-0.00092323	-0.02786339	-27.9986191
F353	L	0	-133.86377	4.927246571	0.054007221	0.001372098	0.142583773	10.32964039
F353	L	2	-133.86377	4.927246571	0.054007221	0.001372098	0.034569338	0.475147307
F353	L	4	-133.86377	4.927246571	0.054007221	0.001372098	-0.07344509	-9.37934494
F353	EX	0	-27.4683704	14.5330162	-0.33270147	0.04006527	-0.63104069	26.46318245
F353	EX	2	-27.4683704	14.5330162	-0.33270147	0.04006527	0.034362175	-2.60284877
F353	EX	4	-27.4683704	14.5330162	-0.33270147	0.04006527	0.699765086	-31.6688805
F353	EY	0	-0.17386658	-0.00016411	20.24661255	0.054563541	39.25331497	-0.00034094
F353	EY	2	-0.17386658	-0.00016411	20.24661255	0.054563541	-1.23990548	-1.2726E-05
F353	EY	4	-0.17386658	-0.00016411	20.24661255	0.054563541	-41.7331276	0.000315492
F353	COMB1	0	-832.575562	25.19522285	0.143990606	0.001087481	0.425014168	52.17559052
F353	COMB1	2	-823.359558	25.19522285	0.143990606	0.001087481	0.137032971	1.78514719
F353	COMB1	4	-814.143555	25.19522285	0.143990606	0.001087481	-0.15094823	-48.6052933
F353	COMB2	0	-611.745972	31.74137878	6.100730896	0.058117889	11.92885113	61.83526993
F353	COMB2	2	-603.681946	31.74137878	6.100730896	0.058117889	-0.27260929	-1.64748359
F353	COMB2	4	-595.617981	31.74137878	6.100730896	0.058117889	-12.4740696	-65.1302338
F353	COMB3	0	-592.096497	21.27748489	21.22153473	0.069375098	41.23438644	42.78152847
F353	COMB3	2	-584.032532	21.27748489	21.22153473	0.069375098	-1.20868063	0.226558208
F353	COMB3	4	-575.968506	21.27748489	21.22153473	0.069375098	-43.6517487	-42.3284111
F354	D	0	-467.003845	-14.6969395	-1.00886238	0.00329321	-2.47757006	-30.1124344
F354	D	2	-459.323853	-14.6969395	-1.00886238	0.00329321	-0.45984536	-0.71855909
F354	D	4	-451.64386	-14.6969395	-1.00886238	0.00329321	1.557879329	28.67531776
F354	L	0	-72.8375092	-4.91371918	-0.19008256	0.001834803	-0.48177683	-10.2308559
F354	L	2	-72.8375092	-4.91371918	-0.19008256	0.001834803	-0.10161175	-0.40341884
F354	L	4	-72.8375092	-4.91371918	-0.19008256	0.001834803	0.278553367	9.42401886
F354	EX	0	27.97987747	14.57415771	0.396999002	-0.02088795	0.774718285	26.5439682
F354	EX	2	27.97987747	14.57415771	0.396999002	-0.02088795	-0.01927963	-2.60434461
F354	EX	4	27.97987747	14.57415771	0.396999002	-0.02088795	-0.81327754	-31.7526569
F354	EY	0	3.001298428	-0.00122259	21.00785255	-0.05346908	40.95742798	-0.0027429
F354	EY	2	3.001298428	-0.00122259	21.00785255	-0.05346908	-1.05827308	-0.00029771
F354	EY	4	3.001298428	-0.00122259	21.00785255	-0.05346908	-43.0739746	0.002147478
F354	COMB1	0	-676.944641	-25.4982777	-1.51476705	0.006887536	-3.743927	-52.5042915
F354	COMB1	2	-667.728638	-25.4982777	-1.51476705	0.006887536	-0.7143932	-1.50774109
F354	COMB1	4	-658.512634	-25.4982777	-1.51476705	0.006887536	2.315140724	49.48881149
F354	COMB2	0	-483.39328	-1.89573979	5.909185886	-0.03442596	10.95021534	-7.36863327
F354	COMB2	2	-475.329285	-1.89573979	5.909185886	-0.03442596	-0.86815578	-3.5771544
F354	COMB2	4	-467.265289	-1.89573979	5.909185886	-0.03442596	-12.6865263	0.214326471
F354	COMB3	0	-501.332825	-12.3900318	21.06411743	-0.0586864	40.49612808	-26.4823074
F354	COMB3	2	-493.268829	-12.3900318	21.06411743	-0.0586864	-1.63210523	-1.70224512

F354	COMB3	4	-485.204834	-12.3900318	21.06411743	-0.0586864	-43.7603378	23.07781792
F355	D	0	-611.880798	1.575790048	-1.42582941	0.016966974	-3.46832657	3.52659893
F355	D	2	-604.200806	1.575790048	-1.42582941	0.016966974	-0.61666775	0.375019103
F355	D	4	-596.520813	1.575790048	-1.42582941	0.016966974	2.234990835	-2.77656078
F355	L	0	-157.515457	0.27727589	-0.39403966	0.004313346	-0.98678976	0.747330129
F355	L	2	-157.515457	0.27727589	-0.39403966	0.004313346	-0.19871058	0.192778423
F355	L	4	-157.515457	0.27727589	-0.39403966	0.004313346	0.589368701	-0.36177331
F355	EX	0	-6.07697487	23.65465546	0.301574528	-0.00876518	0.560064614	45.78476334
F355	EX	2	-6.07697487	23.65465546	0.301574528	-0.00876518	-0.04308436	-1.52453876
F355	EX	4	-6.07697487	23.65465546	0.301574528	-0.00876518	-0.64623338	-48.8338432
F355	EY	0	2.970216274	-0.00263913	19.99596214	-0.21503434	39.02693176	-0.00571865
F355	EY	2	2.970216274	-0.00263913	19.99596214	-0.21503434	-0.96498913	-0.00044039
F355	EY	4	2.970216274	-0.00263913	19.99596214	-0.21503434	-40.9569092	0.004837865
F355	COMB1	0	-986.281677	2.334589481	-2.3414588	0.027261723	-5.74085522	5.427647114
F355	COMB1	2	-977.065674	2.334589481	-2.3414588	0.027261723	-1.05793822	0.75846839
F355	COMB1	4	-967.84967	2.334589481	-2.3414588	0.027261723	3.624978781	-3.9107101
F355	COMB2	0	-697.446228	26.22365761	4.989614487	-0.05763375	8.920568466	51.32376862
F355	COMB2	2	-689.382263	26.22365761	4.989614487	-0.05763375	-1.05865884	-1.123541
F355	COMB2	4	-681.318237	26.22365761	4.989614487	-0.05763375	-11.0378866	-53.5708504
F355	COMB3	0	-690.887695	9.190366745	19.46951294	-0.20937306	37.20211792	18.35453415
F355	COMB3	2	-682.82373	9.190366745	19.46951294	-0.20937306	-1.7369051	-0.02619685
F355	COMB3	4	-674.759705	9.190366745	19.46951294	-0.20937306	-40.67593	-18.4069271
F356	D	0	-542.73999	0.305667758	-1.00711119	0.016439917	-2.73657608	0.486058235
F356	D	2	-535.059998	0.305667758	-1.00711119	0.016439917	-0.72235382	-0.12527724
F356	D	4	-527.380005	0.305667758	-1.00711119	0.016439917	1.291868448	-0.73661274
F356	L	0	-154.160309	0.116549656	-0.28749728	0.005294435	-0.806611	0.227509439
F356	L	2	-154.160309	0.116549656	-0.28749728	0.005294435	-0.23161647	-0.00558986
F356	L	4	-154.160309	0.116549656	-0.28749728	0.005294435	0.343378067	-0.23868914
F356	EX	0	-0.50697702	22.79945755	0.410385698	-0.04897234	0.747846723	43.96029663
F356	EX	2	-0.50697702	22.79945755	0.410385698	-0.04897234	-0.07292458	-1.63861358
F356	EX	4	-0.50697702	22.79945755	0.410385698	-0.04897234	-0.89369583	-47.2375221
F356	EY	0	2.968454123	-0.00187233	16.83961868	-0.16758488	32.95497131	-0.00411644
F356	EY	2	2.968454123	-0.00187233	16.83961868	-0.16758488	-0.72426224	-0.00037177
F356	EY	4	2.968454123	-0.00187233	16.83961868	-0.16758488	-34.4034958	0.003372899
F356	COMB1	0	-897.944458	0.553280771	-1.66852915	0.028198997	-4.57446909	0.947284997
F356	COMB1	2	-888.728516	0.553280771	-1.66852915	0.028198997	-1.2374109	-0.15927644
F356	COMB1	4	-879.512512	0.553280771	-1.66852915	0.028198997	2.099647045	-1.26583791
F356	COMB2	0	-618.027161	23.95451355	4.581201077	-0.08454595	8.027350426	46.07963943
F356	COMB2	2	-609.963135	23.95451355	4.581201077	-0.08454595	-1.13505018	-1.82938397
F356	COMB2	4	-601.89917	23.95451355	4.581201077	-0.08454595	-10.297451	-49.7384071
F356	COMB3	0	-615.480286	7.537527561	16.6628437	-0.17246075	31.71080589	14.42519855
F356	COMB3	2	-607.416321	7.537527561	16.6628437	-0.17246075	-1.61487722	-0.64985549
F356	COMB3	4	-599.352295	7.537527561	16.6628437	-0.17246075	-34.9405594	-15.7249088
F357	D	0	-542.280579	-0.04354562	-1.00831819	-0.0116772	-2.73808384	0.081893034
F357	D	2	-534.600586	-0.04354562	-1.00831819	-0.0116772	-0.72144777	0.168984264
F357	D	4	-526.920593	-0.04354562	-1.00831819	-0.0116772	1.295188308	0.256075501
F357	L	0	-155.842743	-0.09490196	-0.29410338	-0.0010157	-0.82668698	-0.123095
F357	L	2	-155.842743	-0.09490196	-0.29410338	-0.0010157	-0.2384803	0.066708915
F357	L	4	-155.842743	-0.09490196	-0.29410338	-0.0010157	0.349726409	0.256512821
F357	EX	0	0.330504239	22.75069237	-0.41553533	-0.04901775	-0.75818563	43.86535263
F357	EX	2	0.330504239	22.75069237	-0.41553533	-0.04901775	0.072884984	-1.63602901
F357	EX	4	0.330504239	22.75069237	-0.41553533	-0.04901775	0.903955519	-47.1374092
F357	EY	0	2.968449354	0.001871427	16.83958054	0.167583659	32.9548912	0.004114735
F357	EY	2	2.968449354	0.001871427	16.83958054	0.167583659	-0.7242679	0.000371882
F357	EY	4	2.968449354	0.001871427	16.83958054	0.167583659	-34.4034233	-0.00337097
F357	COMB1	0	-900.085083	-0.20409788	-1.68054724	-0.01563776	-4.60839987	-0.09868035
F357	COMB1	2	-890.86908	-0.20409788	-1.68054724	-0.01563776	-1.24730575	0.309515357
F357	COMB1	4	-881.653076	-0.20409788	-1.68054724	-0.01563776	2.113788366	0.717711091
F357	COMB2	0	-617.207947	23.47193909	3.723011971	-0.01052552	6.460673809	45.44915009
F357	COMB2	2	-609.143921	23.47193909	3.723011971	-0.01052552	-0.98534989	-1.49472618
F357	COMB2	4	-601.079956	23.47193909	3.723011971	-0.01052552	-8.4313736	-48.4386024
F357	COMB3	0	-615.264099	7.092816353	16.39928818	0.147941247	31.22841072	13.86911964
F357	COMB3	2	-607.200134	7.092816353	16.39928818	0.147941247	-1.57016397	-0.3165119
F357	COMB3	4	-599.136108	7.092816353	16.39928818	0.147941247	-34.3687401	-14.5021429
F358	D	0	-613.931946	-1.66682959	-1.43972039	-0.01346374	-3.50546765	-3.63447809
F358	D	2	-606.251953	-1.66682959	-1.43972039	-0.01346374	-0.62602717	-0.30081952
F358	D	4	-598.57196	-1.66682959	-1.43972039	-0.01346374	2.253413439	3.03283906
F358	L	0	-198.334854	-0.40473619	-0.52885377	-0.00087953	-1.32327235	-0.93052965
F358	L	2	-198.334854	-0.40473619	-0.52885377	-0.00087953	-0.26556498	-0.12105739
F358	L	4	-198.334854	-0.40473619	-0.52885377	-0.00087953	0.79214251	0.688414872
F358	EX	0	5.870041847	23.48192215	-0.30313316	-0.00935058	-0.56318432	45.45516968
F358	EX	2	5.870041847	23.48192215	-0.30313316	-0.00935058	0.043081917	-1.50866568
F358	EX	4	5.870041847	23.48192215	-0.30313316	-0.00935058	0.649348199	-48.4725037
F358	EY	0	2.970214844	0.002638204	19.99596405	0.215037197	39.02693176	0.005716853
F358	EY	2	2.970214844	0.002638204	19.99596405	0.215037197	-0.96499312	0.000440444
F358	EY	4	2.970214844	0.002638204	19.99596405	0.215037197	-40.9569168	-0.00483596
F358	COMB1	0	-1054.05408	-2.64777327	-2.57383037	-0.01756374	-6.32379723	-5.85022116
F358	COMB1	2	-1044.83813	-2.64777327	-2.57383037	-0.01756374	-1.17613661	-0.55467522
F358	COMB1	4	-1035.62207	-2.64777327	-2.57383037	-0.01756374	3.971524	4.740870953
F358	COMB2	0	-700.092896	22.42695618	4.306690693	0.043644883	7.613015652	42.93858337
F358	COMB2	2	-692.028931	22.42695618	4.306690693	0.043644883	-1.00036454	-1.91532385
F358	COMB2	4	-683.964905	22.42695618	4.306690693	0.043644883	-9.61374474	-46.7692299
F358	COMB3	0	-702.13623	5.521912575	19.22198105	0.208429635	36.70330429	10.2150631
F358	COMB3	2	-694.072205	5.521912575	19.22198105	0.208429635	-1.7406534	-0.8287608

F358	COMB3	4	-686.00824	5.521912575	19.22198105	0.208429635	-40.1846085	-11.8725843
F359	D	0	-527.298706	14.41379261	-1.20285726	0.001447429	-2.95931506	29.63109398
F359	D	2	-519.618713	14.41379261	-1.20285726	0.001447429	-0.55360067	0.803512573
F359	D	4	-511.93869	14.41379261	-1.20285726	0.001447429	1.852113605	-28.0240707
F359	L	0	-137.689407	4.91561985	-0.40089783	0.003808382	-1.00872195	10.29994392
F359	L	2	-137.689407	4.91561985	-0.40089783	0.003808382	-0.20692627	0.468704283
F359	L	4	-137.689407	4.91561985	-0.40089783	0.003808382	0.594869316	-9.36253452
F359	EX	0	-27.5970669	14.47460651	-0.38681915	-0.01759204	-0.75460923	26.37159729
F359	EX	2	-27.5970669	14.47460651	-0.38681915	-0.01759204	0.019028982	-2.57761335
F359	EX	4	-27.5970669	14.47460651	-0.38681915	-0.01759204	0.79266721	-31.526825
F359	EY	0	3.001300335	0.001222019	21.00786209	0.053469516	40.95744705	0.002741872
F359	EY	2	3.001300335	0.001222019	21.00786209	0.053469516	-1.05827427	0.000297833
F359	EY	4	3.001300335	0.001222019	21.00786209	0.053469516	-43.0739975	-0.0021462
F359	COMB1	0	-853.061462	25.16154289	-2.08486533	0.007830326	-5.165133	52.03722382
F359	COMB1	2	-843.845459	25.16154289	-2.08486533	0.007830326	-0.99540281	1.714141965
F359	COMB1	4	-834.629456	25.16154289	-2.08486533	0.007830326	3.174327374	-48.6089401
F359	COMB2	0	-624.65332	31.664505	4.827836037	0.001354579	8.69554615	61.65259933
F359	COMB2	2	-616.589355	31.664505	4.827836037	0.001354579	-0.9601239	-1.67640603
F359	COMB2	4	-608.52533	31.664505	4.827836037	0.001354579	-10.6157951	-65.0054092
F359	COMB3	0	-602.577515	21.24368668	20.54712486	0.053320941	39.34258652	42.66706467
F359	COMB3	2	-594.513489	21.24368668	20.54712486	0.053320941	-1.75165641	0.179694548
F359	COMB3	4	-586.449524	21.24368668	20.54712486	0.053320941	-42.8459053	-42.3076744
F360	D	0	-297.267548	-12.9763536	16.41376495	-0.03167098	33.66321564	-26.0646534
F360	D	2	-289.587555	-12.9763536	16.41376495	-0.03167098	0.835692406	-0.11194903
F360	D	4	-281.907532	-12.9763536	16.41376495	-0.03167098	-31.9918327	25.84075546
F360	L	0	-46.0161247	-3.89302301	3.041663885	-0.00916269	6.330606461	-8.15083122
F360	L	2	-46.0161247	-3.89302301	3.041663885	-0.00916269	0.247279033	-0.36478552
F360	L	4	-46.0161247	-3.89302301	3.041663885	-0.00916269	-5.83604813	7.42125988
F360	EX	0	26.82107544	14.20219517	-0.07497007	-0.15617457	-0.24982357	25.736866
F360	EX	2	26.82107544	14.20219517	-0.07497007	-0.15617457	-0.09988343	-2.66752243
F360	EX	4	26.82107544	14.20219517	-0.07497007	-0.15617457	0.050056692	-31.071909
F360	EY	0	-19.5925541	0.013562168	13.08538628	-0.08781548	24.13263321	0.022440415
F360	EY	2	-19.5925541	0.013562168	13.08538628	-0.08781548	-2.03813815	-0.00468392
F360	EY	4	-19.5925541	0.013562168	13.08538628	-0.08781548	-28.2089081	-0.03180825
F360	COMB1	0	-430.346863	-21.8004608	24.56317902	-0.05266549	50.52482986	-44.3189163
F360	COMB1	2	-421.130859	-21.8004608	24.56317902	-0.05266549	1.398477316	-0.7179957
F360	COMB1	4	-411.914856	-21.8004608	24.56317902	-0.05266549	-47.7278748	42.88292313
F360	COMB2	0	-305.037842	-0.14792927	22.23687935	-0.22544333	44.68373108	-3.29067373
F360	COMB2	2	-296.973846	-0.14792927	22.23687935	-0.22544333	0.209977061	-2.99481487
F360	COMB2	4	-288.909851	-0.14792927	22.23687935	-0.22544333	-44.2637749	-2.6989553
F360	COMB3	0	-338.749573	-10.3635416	31.90861702	-0.17754202	62.60108948	-21.8047237
F360	COMB3	2	-330.685547	-10.3635416	31.90861702	-0.17754202	-1.21613848	-1.07764161
F360	COMB3	4	-322.621552	-10.3635416	31.90861702	-0.17754202	-65.0333633	19.64944077
F361	D	0	-431.145782	1.254318714	20.39237595	0.009358181	42.17821121	2.605345011
F361	D	2	-423.46579	1.254318714	20.39237595	0.009358181	1.393463492	0.096707784
F361	D	4	-415.785797	1.254318714	20.39237595	0.009358181	-39.3912849	-2.41192937
F361	L	0	-100.462975	0.261304498	6.310691357	0.001164441	13.1149292	0.667958736
F361	L	2	-100.462975	0.261304498	6.310691357	0.001164441	0.493547887	0.145349786
F361	L	4	-100.462975	0.261304498	6.310691357	0.001164441	-12.1278334	-0.37725914
F361	EX	0	-5.84785175	23.36342239	0.295184493	-0.03877643	0.53709352	45.16242218
F361	EX	2	-5.84785175	23.36342239	0.295184493	-0.03877643	-0.05327544	-1.5644207
F361	EX	4	-5.84785175	23.36342239	0.295184493	-0.03877643	-0.64364439	-48.2912598
F361	EY	0	-19.2647247	0.026340352	12.4101162	-0.31232166	22.94642258	0.048508719
F361	EY	2	-19.2647247	0.026340352	12.4101162	-0.31232166	-1.87380803	-0.00417198
F361	EY	4	-19.2647247	0.026340352	12.4101162	-0.31232166	-26.6940384	-0.05685268
F361	COMB1	0	-678.115723	1.923269629	34.56795883	0.013092923	71.59774017	4.195147991
F361	COMB1	2	-668.899719	1.923269629	34.56795883	0.013092923	2.461832762	0.348609
F361	COMB1	4	-659.683716	1.923269629	34.56795883	0.013092923	-66.6740723	-3.49792981
F361	COMB2	0	-496.469849	25.58878517	27.6145649	-0.12832204	56.20233917	49.70440292
F361	COMB2	2	-488.405853	25.58878517	27.6145649	-0.12832204	0.973214626	-1.47316122
F361	COMB2	4	-480.341858	25.58878517	27.6145649	-0.12832204	-54.255909	-52.6507263
F361	COMB3	0	-506.418945	8.786480904	36.52346802	-0.32995942	72.68125153	17.22311592
F361	COMB3	2	-498.35495	8.786480904	36.52346802	-0.32995942	-0.3656759	-0.34984475
F361	COMB3	4	-490.290955	8.786480904	36.52346802	-0.32995942	-73.4126053	-17.9228058
F362	D	0	-381.352539	0.230916515	19.85521889	0.019479811	41.30038834	0.418966234
F362	D	2	-373.672546	0.230916515	19.85521889	0.019479811	1.589955091	-0.04286674
F362	D	4	-365.992554	0.230916515	19.85521889	0.019479811	-38.1204758	-0.50469971
F362	L	0	-96.8553772	0.100269683	6.200438976	0.005242245	12.94700623	0.19223927
F362	L	2	-96.8553772	0.100269683	6.200438976	0.005242245	0.546129882	-0.00830007
F362	L	4	-96.8553772	0.100269683	6.200438976	0.005242245	-11.8547468	-0.20883942
F362	EX	0	-0.38353831	22.52326775	0.301197529	-0.07470826	0.482581884	43.37467194
F362	EX	2	-0.38353831	22.52326775	0.301197529	-0.07470826	-0.1198131	-1.67185974
F362	EX	4	-0.38353831	22.52326775	0.301197529	-0.07470826	-0.72220808	-46.7183914
F362	EY	0	-17.4066677	0.015158835	10.06213474	-0.24560967	18.62844658	0.028758124
F362	EY	2	-17.4066677	0.015158835	10.06213474	-0.24560967	-1.49582124	-0.00155954
F362	EY	4	-17.4066677	0.015158835	10.06213474	-0.24560967	-21.6200886	-0.03187721
F362	COMB1	0	-612.591614	0.437531292	33.7469635	0.031763367	70.27568054	0.810342312
F362	COMB1	2	-603.375671	0.437531292	33.7469635	0.031763367	2.781753778	-0.0647202
F362	COMB1	4	-594.159668	0.437531292	33.7469635	0.031763367	-64.7121658	-0.93978274
F362	COMB2	0	-436.809662	23.59040451	26.28242874	-0.13258499	53.8111496	45.40231323
F362	COMB2	2	-428.745667	23.59040451	26.28242874	-0.13258499	1.246293426	-1.77849066
F362	COMB2	4	-420.681671	23.59040451	26.28242874	-0.13258499	-51.3185577	-48.9592934
F362	COMB3	0	-449.327423	7.384793758	33.46123505	-0.25931814	67.15559387	14.19368744
F362	COMB3	2	-441.263428	7.384793758	33.46123505	-0.25931814	0.233130217	-0.57589793

F362	COMB3	4	-433.199432	7.384793758	33.46123505	-0.25931814	-66.6893387	-15.3454828
F363	D	0	-381.126221	-0.01020711	19.84578514	-0.01597327	41.28330612	0.048131432
F363	D	2	-373.446198	-0.01020711	19.84578514	-0.01597327	1.591736317	0.068545647
F363	D	4	-365.766205	-0.01020711	19.84578514	-0.01597327	-38.0998344	0.088959858
F363	L	0	-97.5655823	-0.00338911	6.279772282	-0.00298699	13.12011051	0.033532329
F363	L	2	-97.5655823	-0.00338911	6.279772282	-0.00298699	0.560566485	0.040310558
F363	L	4	-97.5655823	-0.00338911	6.279772282	-0.00298699	-11.9989777	0.047088783
F363	EX	0	0.206815347	22.47155952	-0.30317175	-0.05407877	-0.48613885	43.27422714
F363	EX	2	0.206815347	22.47155952	-0.30317175	-0.05407877	0.120204583	-1.66888368
F363	EX	4	0.206815347	22.47155952	-0.30317175	-0.05407877	0.726547956	-46.6119957
F363	EY	0	-17.406641	-0.01516168	10.06210327	0.245607898	18.6283741	-0.02876347
F363	EY	2	-17.406641	-0.01516168	10.06210327	0.245607898	-1.49583018	0.001559892
F363	EY	4	-17.406641	-0.01516168	10.06210327	0.245607898	-21.6200333	0.031883258
F363	COMB1	0	-613.45636	-0.01767111	33.86257935	-0.02394712	70.53214264	0.111409448
F363	COMB1	2	-604.240356	-0.01767111	33.86257935	-0.02394712	2.806989908	0.146751672
F363	COMB1	4	-595.024353	-0.01767111	33.86257935	-0.02394712	-64.9181671	0.182093889
F363	COMB2	0	-436.184723	23.24150276	25.67198372	0.003682119	52.84508896	44.84086609
F363	COMB2	2	-428.120728	23.24150276	25.67198372	0.003682119	1.501126766	-1.6421324
F363	COMB2	4	-420.056732	23.24150276	25.67198372	0.003682119	-49.8428383	-48.1251335
F363	COMB3	0	-449.127502	7.050836086	33.28591156	0.223140642	66.88696289	13.66228104
F363	COMB3	2	-441.063507	7.050836086	33.28591156	0.223140642	0.315144211	-0.43938971
F363	COMB3	4	-432.999512	7.050836086	33.28591156	0.223140642	-66.2566757	-14.5410604
F364	D	0	-431.961029	-1.20331681	20.50110054	-0.00872242	42.41457367	-2.46480823
F364	D	2	-424.281006	-1.20331681	20.50110054	-0.00872242	1.412377238	-0.05817481
F364	D	4	-416.601013	-1.20331681	20.50110054	-0.00872242	-39.5898209	2.348458529
F364	L	0	-119.188377	-0.23569034	8.401408195	-0.00068488	17.45435905	-0.58055711
F364	L	2	-119.188377	-0.23569034	8.401408195	-0.00068488	0.651544273	-0.10917646
F364	L	4	-119.188377	-0.23569034	8.401408195	-0.00068488	-16.1512699	0.362204164
F364	EX	0	5.634434223	23.18146515	-0.29309154	0.01204096	-0.53244567	44.81680679
F364	EX	2	5.634434223	23.18146515	-0.29309154	0.01204096	0.053737242	-1.54611659
F364	EX	4	5.634434223	23.18146515	-0.29309154	0.01204096	0.639920235	-47.9090385
F364	EY	0	-19.2647228	-0.02634337	12.41011524	0.312325567	22.94641304	-0.04851445
F364	EY	2	-19.2647228	-0.02634337	12.41011524	0.312325567	-1.87381482	0.004172278
F364	EY	4	-19.2647228	-0.02634337	12.41011524	0.312325567	-26.6940422	0.056859009
F364	COMB1	0	-709.054626	-1.82108474	38.04357529	-0.0115627	78.82446289	-3.88666129
F364	COMB1	2	-699.838623	-1.82108474	38.04357529	-0.0115627	2.737323523	-0.2444921
F364	COMB1	4	-690.62262	-1.82108474	38.04357529	-0.0115627	-73.3498154	3.397676945
F364	COMB2	0	-491.340179	22.64679146	27.77843666	0.101470672	56.71046448	43.59918976
F364	COMB2	2	-483.276154	22.64679146	27.77843666	0.101470672	1.153598785	-1.69439065
F364	COMB2	4	-475.212158	22.64679146	27.77843666	0.101470672	-54.4032669	-46.9879684
F364	COMB3	0	-509.556549	5.936775684	37.11089706	0.322360486	73.95944214	11.29543018
F364	COMB3	2	-501.492523	5.936775684	37.11089706	0.322360486	-0.26234591	-0.57811999
F364	COMB3	4	-493.428497	5.936775684	37.11089706	0.322360486	-74.4841309	-12.4516697
F365	D	0	-325.212433	12.89210033	19.45664024	0.033313114	39.9706955	25.93859863
F365	D	2	-317.53244	12.89210033	19.45664024	0.033313114	1.057419896	0.154401124
F365	D	4	-309.852448	12.89210033	19.45664024	0.033313114	-37.855854	-25.6297951
F365	L	0	-75.9794083	3.946104288	6.320280075	0.013226555	13.13349342	8.2917099
F365	L	2	-75.9794083	3.946104288	6.320280075	0.013226555	0.492934644	0.399501413
F365	L	4	-75.9794083	3.946104288	6.320280075	0.013226555	-12.147624	-7.49270725
F365	EX	0	-26.4318447	14.10235405	0.077171437	0.010647514	0.252950102	25.56772614
F365	EX	2	-26.4318447	14.10235405	0.077171437	0.010647514	0.098607257	-2.63697958
F365	EX	4	-26.4318447	14.10235405	0.077171437	0.010647514	-0.0557356	-30.8416862
F365	EY	0	-19.5925579	-0.01356405	13.08539295	0.087815814	24.13264275	-0.02244373
F365	EY	2	-19.5925579	-0.01356405	13.08539295	0.087815814	-2.0381403	0.004684363
F365	EY	4	-19.5925579	-0.01356405	13.08539295	0.087815814	-28.2089233	0.031812452
F365	COMB1	0	-511.82196	21.7842865	33.46041489	0.061138224	68.97842407	44.39305496
F365	COMB1	2	-502.605957	21.7842865	33.46041489	0.061138224	2.057599306	0.824483573
F365	COMB1	4	-493.389984	21.7842865	33.46041489	0.061138224	-64.8632278	-42.7440872
F365	COMB2	0	-398.935181	29.3713913	26.62213135	0.07782729	53.96986771	56.30294418
F365	COMB2	2	-390.871185	29.3713913	26.62213135	0.07782729	0.725609541	-2.43983412
F365	COMB2	4	-382.80719	29.3713913	26.62213135	0.07782729	-52.5186462	-61.1826134
F365	COMB3	0	-394.304779	19.20772743	36.18432999	0.134705707	71.52523804	37.87768555
F365	COMB3	2	-386.240784	19.20772743	36.18432999	0.134705707	-0.8434208	-0.53776586
F365	COMB3	4	-378.176788	19.20772743	36.18432999	0.134705707	-73.2120743	-38.9532166
F366	D	0	-34.7983856	-6.68160677	-2.23322272	-0.23169862	6.52054739	-4.96646214
F366	D	0.810000002	-31.6879864	-6.68160677	-2.23322272	-0.23169862	8.329457283	0.445637107
F366	D	1.620000005	-28.5775871	-6.68160677	-2.23322272	-0.23169862	10.1383667	5.857736588
F366	L	0	-1.25051153	0.064263076	-0.24982466	-0.04894866	0.922724426	0.032197792
F366	L	0.810000002	-1.25051153	0.064263076	-0.24982466	-0.04894866	1.125082374	-0.01985528
F366	L	1.620000005	-1.25051153	0.064263076	-0.24982466	-0.04894866	1.327440143	-0.07190835
F366	EX	0	5.951087475	11.33240509	-3.65730906	-4.6408124	-2.99362779	7.406763554
F366	EX	0.810000002	5.951087475	11.33240509	-3.65730906	-4.6408124	-0.03120882	-1.77248037
F366	EX	1.620000005	5.951087475	11.33240509	-3.65730906	-4.6408124	2.931210041	-10.951725
F366	EY	0	27.67122078	-0.00135098	54.99910355	0.130512178	37.33198547	-0.00357311
F366	EY	0.810000002	27.67122078	-0.00135098	54.99910355	0.130512178	-7.21726656	-0.00247882
F366	EY	1.620000005	27.67122078	-0.00135098	54.99910355	0.130512178	-51.7665215	-0.00138453
F366	COMB1	0	-43.7588806	-7.91510725	-3.07958651	-0.3563562	9.301015854	-5.90823793
F366	COMB1	0.810000002	-40.0264015	-7.91510725	-3.07958651	-0.3563562	11.79548073	0.502996087
F366	COMB1	1.620000005	-36.2939224	-7.91510725	-3.07958651	-0.3563562	14.28994465	6.914230347
F366	COMB2	0	-22.056406	4.733169079	11.1158247	-5.02083158	15.79840374	2.460231543
F366	COMB2	0.810000002	-18.7904873	4.733169079	11.1158247	-5.02083158	6.79459095	-1.3736335
F366	COMB2	1.620000005	-15.5245676	4.733169079	11.1158247	-5.02083158	-2.20922232	-5.20749903
F366	COMB3	0	-6.002841	-3.42715526	54.17342758	-1.58352041	45.39282608	-2.87526417
F366	COMB3	0.810000002	-2.73692203	-3.42715526	54.17342758	-1.58352041	1.512370348	-0.09926954

F366	COMB3	1.620000005	0.528997064	-3.42715526	54.17342758	-1.58352041	-42.3680878	2.676725149
F367	D	0	-34.8417625	6.76526165	-2.19597578	0.198055461	6.546682835	5.025692463
F367	D	0.810000002	-31.7313652	6.76526165	-2.19597578	0.198055461	8.325422287	-0.45416743
F367	D	1.620000005	-28.620966	6.76526165	-2.19597578	0.198055461	10.10416222	-5.93402719
F367	L	0	-1.31853235	0.010392915	-0.2516976	0.017572388	0.940028012	0.020713285
F367	L	0.810000002	-1.31853235	0.010392915	-0.2516976	0.017572388	1.143903017	0.012295027
F367	L	1.620000005	-1.31853235	0.010392915	-0.2516976	0.017572388	1.347777963	0.003876769
F367	EX	0	-5.96467638	11.34556198	3.6388762	-4.59438419	2.985471725	7.409509659
F367	EX	0.810000002	-5.96467638	11.34556198	3.6388762	-4.59438419	0.037983365	-1.7803911
F367	EX	1.620000005	-5.96467638	11.34556198	3.6388762	-4.59438419	-2.90950513	-10.9702921
F367	EY	0	27.67111015	0.001388925	54.99879456	-0.13054125	37.33178329	0.003611165
F367	EY	0.810000002	27.67111015	0.001388925	54.99879456	-0.13054125	-7.21722317	0.002486136
F367	EY	1.620000005	27.67111015	0.001388925	54.99879456	-0.13054125	-51.7662277	0.001361107
F367	COMB1	0	-43.9197693	8.134943008	-3.0378871	0.265782386	9.360064507	6.063971996
F367	COMB1	0.810000002	-40.1872902	8.134943008	-3.0378871	0.265782386	11.82075119	-0.52532887
F367	COMB1	1.620000005	-36.4548111	8.134943008	-3.0378871	0.265782386	14.28143883	-7.11462975
F367	COMB2	0	-34.4562302	18.84989357	18.7057972	-4.58281469	22.01959991	12.95348167
F367	COMB2	0.810000002	-31.1903095	18.84989357	18.7057972	-4.58281469	6.867909908	-2.31492448
F367	COMB2	1.620000005	-27.9243908	18.84989357	18.7057972	-4.58281469	-8.28377914	-17.5833321
F367	COMB3	0	-9.82339573	10.68210888	56.50992203	-1.37080574	47.30892181	7.621288776
F367	COMB3	0.810000002	-6.557477	10.68210888	56.50992203	-1.37080574	1.535902858	-1.03121567
F367	COMB3	1.620000005	-3.29155803	10.68210888	56.50992203	-1.37080574	-44.237114	-9.68372059
F368	D	0	-7.03535032	-9.86986351	-0.02799995	-0.00016779	-0.23511328	-6.32501125
F368	D	1.25	-7.03535032	-4.9198637	-0.02799995	-0.00016779	-0.20011333	2.918569088
F368	D	2.5	-7.03535032	0.030136229	-0.02799995	-0.00016779	-0.16511337	5.974648952
F368	D	3.75	-7.03535032	4.980136395	-0.02799995	-0.00016779	-0.13011345	2.84322834
F368	D	5	-7.03535032	9.930136681	-0.02799995	-0.00016779	-0.09511351	-6.47569227
F368	L	0	0.001614093	0.028327523	-0.02410127	-0.00368096	-0.08867936	0.054664567
F368	L	1.25	0.001614093	0.028327523	-0.02410127	-0.00368096	-0.05855277	0.019255163
F368	L	2.5	0.001614093	0.028327523	-0.02410127	-0.00368096	-0.02842618	-0.01615424
F368	L	3.75	0.001614093	0.028327523	-0.02410127	-0.00368096	0.001700415	-0.05156364
F368	L	5	0.001614093	0.028327523	-0.02410127	-0.00368096	0.031827006	-0.08697305
F368	EX	0	-0.01430877	7.188642502	-7.45773172	-0.17710087	-18.6642323	17.97569656
F368	EX	1.25	-0.01430877	7.188642502	-7.45773172	-0.17710087	-9.34206772	8.98989296
F368	EX	2.5	-0.01430877	7.188642502	-7.45773172	-0.17710087	-0.01990204	0.004089706
F368	EX	3.75	-0.01430877	7.188642502	-7.45773172	-0.17710087	9.30226326	-8.98171329
F368	EX	5	-0.01430877	7.188642502	-7.45773172	-0.17710087	18.6244297	-17.9675179
F368	EY	0	0.283558279	4.20908E-06	-1.3683E-05	1.49749E-05	0.112245925	-0.00528341
F368	EY	1.25	0.283558279	4.20908E-06	-1.3683E-05	1.49749E-05	0.112263024	-0.00528867
F368	EY	2.5	0.283558279	4.20908E-06	-1.3683E-05	1.49749E-05	0.11228013	-0.00529393
F368	EY	3.75	0.283558279	4.20908E-06	-1.3683E-05	1.49749E-05	0.112297237	-0.00529919
F368	EY	5	0.283558279	4.20908E-06	-1.3683E-05	1.49749E-05	0.112314336	-0.00530446
F368	COMB1	0	-8.43983746	-11.7985125	-0.07216197	-0.00609089	-0.42402288	-7.50255013
F368	COMB1	1.25	-8.43983746	-5.8585124	-0.07216197	-0.00609089	-0.33382043	3.533091068
F368	COMB1	2.5	-8.43983746	0.081487514	-0.07216197	-0.00609089	-0.24361794	7.143731594
F368	COMB1	3.75	-8.43983746	6.021487713	-0.07216197	-0.00609089	-0.15341547	3.329372406
F368	COMB1	5	-8.43983746	11.96148777	-0.07216197	-0.00609089	-0.06321301	-7.90998745
F368	COMB2	0	-7.31209803	-2.91418743	-7.75574875	-0.18463036	-19.5569267	11.97914028
F368	COMB2	1.25	-7.31209803	2.283312559	-7.75574875	-0.18463036	-9.86223984	12.37343693
F368	COMB2	2.5	-7.31209803	7.48081255	-7.75574875	-0.18463036	-0.16755366	6.270857811
F368	COMB2	3.75	-7.31209803	12.6783123	-7.75574875	-0.18463036	9.527132988	-6.32859564
F368	COMB2	5	-7.31209803	17.87581253	-7.75574875	-0.18463036	19.22181892	-25.4249268
F368	COMB3	0	-7.09338045	-8.09000683	-2.38619184	-0.05710673	-6.03617811	-0.96724522
F368	COMB3	1.25	-7.09338045	-2.89250684	-2.38619184	-0.05710673	-3.05343819	5.896826267
F368	COMB3	2.5	-7.09338045	2.304992914	-2.38619184	-0.05710673	-0.0706983	6.26402235
F368	COMB3	3.75	-7.09338045	7.502492905	-2.38619184	-0.05710673	2.912041664	0.134343356
F368	COMB3	5	-7.09338045	12.69999313	-2.38619184	-0.05710673	5.89478159	-12.4922113
F369	D	0	-2.26122236	-13.7077227	0.353743315	-0.4672747	0.466811925	-10.1381989
F369	D	1	-2.26122236	-9.74772263	0.353743315	-0.4672747	0.11306864	1.589522481
F369	D	2	-2.26122236	-5.78772306	0.353743315	-0.4672747	-0.24067461	9.357244492
F369	D	3	-2.26122236	-1.82772362	0.353743315	-0.4672747	-0.59441787	13.16496849
F369	D	4	-2.26122236	2.13227582	0.353743315	-0.4672747	-0.94816113	13.01269245
F369	L	0	-0.27392593	-1.27883899	0.062648982	-0.01724378	0.137628019	-1.3237592
F369	L	1	-0.27392593	-1.27883899	0.062648982	-0.01724378	0.074979037	-0.04492034
F369	L	2	-0.27392593	-1.27883899	0.062648982	-0.01724378	0.012330058	1.233918548
F369	L	3	-0.27392593	-1.27883899	0.062648982	-0.01724378	-0.05031892	2.512757301
F369	L	4	-0.27392593	-1.27883899	0.062648982	-0.01724378	-0.11296789	3.791596413
F369	EX	0	-11.1150417	-1.23755491	11.34671402	7.023972988	23.30504608	-2.75410938
F369	EX	1	-11.1150417	-1.23755491	11.34671402	7.023972988	11.95833206	-1.51655447
F369	EX	2	-11.1150417	-1.23755491	11.34671402	7.023972988	0.611619174	-0.27899966
F369	EX	3	-11.1150417	-1.23755491	11.34671402	7.023972988	-10.7350931	0.958555222
F369	EX	4	-11.1150417	-1.23755491	11.34671402	7.023972988	-22.0818062	2.19611001
F369	EY	0	54.99908829	27.67121696	-0.28490928	-0.00666794	-0.24275811	51.7665062
F369	EY	1	54.99908829	27.67121696	-0.28490928	-0.00666794	0.042151123	24.09529114
F369	EY	2	54.99908829	27.67121696	-0.28490928	-0.00666794	0.327060342	-3.57592297
F369	EY	3	54.99908829	27.67121696	-0.28490928	-0.00666794	0.61196959	-31.247139
F369	EY	4	54.99908829	27.67121696	-0.28490928	-0.00666794	0.896878779	-58.918354
F369	COMB1	0	-3.15174842	-18.495409	0.524730325	-0.58831972	0.780379117	-14.2838535
F369	COMB1	1	-3.15174842	-13.7434092	0.524730325	-0.58831972	0.255648822	1.835554481
F369	COMB1	2	-3.15174842	-8.99141026	0.524730325	-0.58831972	-0.26908144	13.20296383
F369	COMB1	3	-3.15174842	-4.23941088	0.524730325	-0.58831972	-0.79381174	19.81837273
F369	COMB1	4	-3.15174842	0.51258868	0.524730325	-0.58831972	-1.318542	21.68178558
F369	COMB2	0	3.360074282	-7.36037874	12.04526711	6.771641254	24.57775879	2.393853426
F369	COMB2	1	3.360074282	-3.20237899	12.04526711	6.771641254	12.53249168	7.675231457

F369	COMB2	2	3.360074282	0.955620289	12.04526711	6.771641254	0.487225473	8.798610687
F369	COMB2	3	3.360074282	5.113619804	12.04526711	6.771641254	-11.5580406	5.763990879
F369	COMB2	4	3.360074282	9.271619797	12.04526711	6.771641254	-23.6033058	-1.42862749
F369	COMB3	0	51.78723145	13.8690052	3.666224957	1.709479928	7.619698524	42.42519379
F369	COMB3	1	51.78723145	18.02700424	3.666224957	1.709479928	3.953473806	26.47719002
F369	COMB3	2	51.78723145	22.18500519	3.666224957	1.709479928	0.287249029	6.371187687
F369	COMB3	3	51.78723145	26.34300423	3.666224957	1.709479928	-3.37897563	-17.8928146
F369	COMB3	4	51.78723145	30.50100327	3.666224957	1.709479928	-7.04519987	-46.3148155
F370	D	0	-2.1679759	-13.6908283	-0.27008852	0.541665256	-0.29316896	-10.1043301
F370	D	1	-2.1679759	-9.73082829	-0.27008852	0.541665256	-0.02308045	1.606496811
F370	D	2	-2.1679759	-5.77082825	-0.27008852	0.541665256	0.24700807	9.3573246
F370	D	3	-2.1679759	-1.8108288	-0.27008852	0.541665256	0.517096579	13.14815331
F370	D	4	-2.1679759	2.149170637	-0.27008852	0.541665256	0.787185073	12.97898197
F370	L	0	-0.22759633	-1.29020476	0.012007009	0.090849817	0.014254618	-1.35145891
F370	L	1	-0.22759633	-1.29020476	0.012007009	0.090849817	0.002247611	-0.0612543
F370	L	2	-0.22759633	-1.29020476	0.012007009	0.090849817	-0.0097594	1.228950262
F370	L	3	-0.22759633	-1.29020476	0.012007009	0.090849817	-0.02176641	2.519155025
F370	L	4	-0.22759633	-1.29020476	0.012007009	0.090849817	-0.03377341	3.809359789
F370	EX	0	11.09660816	1.22396636	11.33125305	6.997225761	23.21881104	2.732404232
F370	EX	1	11.09660816	1.22396636	11.33125305	6.997225761	11.88756084	1.508437991
F370	EX	2	11.09660816	1.22396636	11.33125305	6.997225761	0.556308925	0.284471691
F370	EX	3	11.09660816	1.22396636	11.33125305	6.997225761	-10.7749424	-0.93949455
F370	EX	4	11.09660816	1.22396636	11.33125305	6.997225761	-22.1061954	-2.16346073
F370	EY	0	54.99880981	27.67111588	0.284947217	0.006665562	0.242855594	51.76624298
F370	EY	1	54.99880981	27.67111588	0.284947217	0.006665562	-0.04209159	24.09513283
F370	EY	2	54.99880981	27.67111588	0.284947217	0.006665562	-0.32703876	-3.57597947
F370	EY	3	54.99880981	27.67111588	0.284947217	0.006665562	-0.61198592	-31.2470894
F370	EY	4	54.99880981	27.67111588	0.284947217	0.006665562	-0.89693308	-58.9182014
F370	COMB1	0	-2.96572518	-18.4933205	-0.30489501	0.795358002	-0.32899538	-14.2875299
F370	COMB1	1	-2.96572518	-13.7413216	-0.30489501	0.795358002	-0.02410037	1.829789281
F370	COMB1	2	-2.96572518	-8.98932171	-0.30489501	0.795358002	0.28079465	13.19510937
F370	COMB1	3	-2.96572518	-4.23732233	-0.30489501	0.795358002	0.585689604	19.80843163
F370	COMB1	4	-2.96572518	0.514677107 -	-0.30489501	0.795358002	0.890584648	21.66975403
F370	COMB2	0	26.46154785	-4.79857731	11.53779507	7.841594219	23.80463219	8.099149704
F370	COMB2	1	26.46154785	-0.64057767	11.53779507	7.841594219	12.26683998	10.81872654
F370	COMB2	2	26.46154785	3.517422199	11.53779507	7.841594219	0.729046762	9.380304337
F370	COMB2	3	26.46154785	7.675421715	11.53779507	7.841594219	-10.8087463	3.783884048
F370	COMB2	4	26.46154785	11.83342075	11.53779507	7.841594219	-22.3465405	-5.97053576
F370	COMB3	0	58.89611435	14.65843678	3.588728666	2.808490992	7.265586853	44.18000793
F370	COMB3	1	58.89611435	18.81643677	3.588728666	2.808490992	3.676858902	27.44257355
F370	COMB3	2	58.89611435	22.97443581	3.588728666	2.808490992	0.088130862	6.547139645
F370	COMB3	3	58.89611435	27.13243484	3.588728666	2.808490992	-3.50059724	-18.5062904
F370	COMB3	4	58.89611435	31.29043579	3.588728666	2.808490992	-7.08932543	-47.71772
F371	D	0	-301.089661	2.015558481	-19.4233665	1.083799481	3.235002041	-3.38219714
F371	D	0.460000008	-299.323273	2.015558481	-19.4233665	1.083799481	12.16975689	-4.30935526
F371	D	0.920000017	-297.556885	2.015558481	-19.4233665	1.083799481	21.10451126	-5.23651266
F371	L	0	-46.4846268	0.651352763	-5.65318251	0.046599537	1.145350099	-1.03316402
F371	L	0.460000008	-46.4846268	0.651352763	-5.65318251	0.046599537	3.745815992	-1.33278668
F371	L	0.920000017	-46.4846268	0.651352763	-5.65318251	0.046599537	6.346282005	-1.6324091
F371	EX	0	-2.08621764	31.42166519	-9.39319611	15.66138744	-5.36588001	-15.7748613
F371	EX	0.460000008	-2.08621764	31.42166519	-9.39319611	15.66138744	-1.04500628	-30.2288399
F371	EX	0.920000017	-2.08621764	31.42166519	-9.39319611	15.66138744	3.275867224	-44.6828194
F371	EY	0	20.39743614	-0.35703051	68.68424988	-1.04570603	35.52236557	0.042124372
F371	EY	0.460000008	20.39743614	-0.35703051	68.68424988	-1.04570603	3.927588463	0.206358537
F371	EY	0.920000017	20.39743614	-0.35703051	68.68424988	-1.04570603	-27.6671925	0.370592684
F371	COMB1	0	-435.683014	3.460834742	-32.3531303	1.375118613	5.714562416	-5.71169901
F371	COMB1	0.460000008	-433.563324	3.460834742	-32.3531303	1.375118613	20.59701347	-7.30368471
F371	COMB1	0.920000017	-431.443665	3.460834742	-32.3531303	1.375118613	35.47946548	-8.89566994
F371	COMB2	0	-326.520844	34.73047256	-10.2617054	17.0328064	9.393397331	-20.1904659
F371	COMB2	0.460000008	-324.666138	34.73047256	-10.2617054	17.0328064	14.11378574	-36.1664963
F371	COMB2	0.920000017	-322.811432	34.73047256	-10.2617054	17.0328064	18.8341732	-52.1425285
F371	COMB3	0	-310.026672	11.84445572	46.98432159	4.988013744	39.36577225	-8.80160427
F371	COMB3	0.460000008	-308.171936	11.84445572	46.98432159	4.988013744	17.75296783	-14.2500591
F371	COMB3	0.920000017	-306.31723	11.84445572	46.98432159	4.988013744	-3.85983729	-19.698513
F372	D	0	-300.846008	-1.72670794	-19.3298359	-0.97275156	3.274873734	3.259547472
F372	D	0.460000008	-299.07959	-1.72670794	-19.3298359	-0.97275156	12.166605	4.053833961
F372	D	0.920000017	-297.313202	-1.72670794	-19.3298359	-0.97275156	21.05833626	4.848120213
F372	L	0	-48.0455017	-0.49422696	-5.73722744	0.056110587	1.306208134	1.053441525
F372	L	0.460000008	-48.0455017	-0.49422696	-5.73722744	0.056110587	3.945334673	1.280786037
F372	L	0.920000017	-48.0455017	-0.49422696	-5.73722744	0.056110587	6.584461212	1.50813067
F372	EX	0	1.885267854	31.34407043	9.36233902	15.81334496	5.352368832	-15.7279911
F372	EX	0.460000008	1.885267854	31.34407043	9.36233902	15.81334496	1.045689464	-30.1462746
F372	EX	0.920000017	1.885267854	31.34407043	9.36233902	15.81334496	-3.2609899	-44.5645599
F372	EY	0	20.39740944	0.357052535	68.68403625	1.045740843	35.52222443	-0.04210123
F372	EY	0.460000008	20.39740944	0.357052535	68.68403625	1.045740843	3.927548409	-0.20634553
F372	EY	0.920000017	20.39740944	0.357052535	68.68403625	1.045740843	-27.6671295	-0.37058982
F372	COMB1	0	-437.888	-2.86281276	-32.3753662	-1.0775249	6.01978159	5.596963406
F372	COMB1	0.460000008	-435.768341	-2.86281276	-32.3753662	-1.0775249	20.91246223	6.913858414
F372	COMB1	0.920000017	-433.648651	-2.86281276	-32.3753662	-1.0775249	35.80514145	8.230753899
F372	COMB2	0	-322.64621	30.58485985	9.22193718	15.69250584	20.57927513	-12.5373735
F372	COMB2	0.460000008	-320.791473	30.58485985	9.22193718	15.69250584	16.33718109	-26.6064186
F372	COMB2	0.920000017	-318.936768	30.58485985	9.22193718	15.69250584	12.09508705	-40.6754684
F372	COMB3	0	-309.011505	8.27956295	52.9638176	5.075517178	42.83440781	-1.24416447
F372	COMB3	0.460000008	-307.156769	8.27956295	52.9638176	5.075517178	18.4710331	-5.05276585

F375	EX	3.75	-22.0807934	14.28931046	-2.18421674	-0.19484596	2.657368898	-17.8367634
F375	EX	5	-22.0807934	14.28931046	-2.18421674	-0.19484596	5.387639999	-35.6983986
F375	EY	0	2.467289209	-7.656E-07	-1.9512E-05	4.08518E-06	-0.6173088	0.058818709
F375	EY	1.25	2.467289209	-7.656E-07	-1.9512E-05	4.08518E-06	-0.61728442	0.058819667
F375	EY	2.5	2.467289209	-7.656E-07	-1.9512E-05	4.08518E-06	-0.61726004	0.058820624
F375	EY	3.75	2.467289209	-7.656E-07	-1.9512E-05	4.08518E-06	-0.6172356	0.058821581
F375	EY	5	2.467289209	-7.656E-07	-1.9512E-05	4.08518E-06	-0.61721122	0.058822535
F375	COMB1	0	-3.47984576	-70.8859634	-0.02985387	-0.03069381	0.415475607	-67.7080231
F375	COMB1	1.25	-3.47984576	-41.666584	-0.02985387	-0.03069381	0.452792943	4.587186337
F375	COMB1	2.5	-3.47984576	0.281543225	-0.02985387	-0.03069381	0.490110308	30.65562439
F375	COMB1	3.75	-3.47984576	42.22966766	-0.02985387	-0.03069381	0.527427614	3.883328199
F375	COMB1	5	-3.47984576	71.44904327	-0.02985387	-0.03069381	0.564744949	-69.1157379
F375	COMB2	0	-24.3534012	-40.2338867	-2.27531052	-0.20759299	-5.48701239	-14.6058798
F375	COMB2	1.25	-24.3534012	-16.7860737	-2.27531052	-0.20759299	-2.642874	22.29624367
F375	COMB2	2.5	-24.3534012	14.91736507	-2.27531052	-0.20759299	0.20126459	23.59571075
F375	COMB2	3.75	-24.3534012	46.62080383	-2.27531052	-0.20759299	3.045403004	-14.9971704
F375	COMB2	5	-24.3534012	70.06861877	-2.27531052	-0.20759299	5.889541626	-89.1927109
F375	COMB3	0	-6.64177322	-50.5221901	-0.70268893	-0.06730091	-1.95665443	-40.3013191
F375	COMB3	1.25	-6.64177322	-27.0743771	-0.70268893	-0.06730091	-1.07829332	9.461185455
F375	COMB3	2.5	-6.64177322	4.629060745	-0.70268893	-0.06730091	-0.19993201	23.62103271
F375	COMB3	3.75	-6.64177322	36.33249664	-0.70268893	-0.06730091	0.678429186	-2.11146736
F375	COMB3	5	-6.64177322	59.78031158	-0.70268893	-0.06730091	1.556790471	-63.4466248
F376	D	0	0.011716619	-50.7515373	-0.29516834	-1.29442191	-0.76058978	-44.7894592
F376	D	1.25	0.011716619	-29.0062218	-0.29516834	-1.29442191	-0.39162934	6.141497135
F376	D	2.5	0.011716619	-0.19528304	-0.29516834	-1.29442191	-0.02266886	24.50500298
F376	D	3.75	0.011716619	28.61565399	-0.29516834	-1.29442191	0.346291602	6.629704475
F376	D	5	0.011716619	50.36096954	-0.29516834	-1.29442191	0.715252042	-43.8130417
F376	L	0	0.455904186	-6.68171072	0.086639233	-0.64474595	0.219409034	-6.58876085
F376	L	1.25	0.455904186	-4.7285862	0.086639233	-0.64474595	0.111109994	0.949576318
F376	L	2.5	0.455904186	-0.11921079	0.086639233	-0.64474595	0.002810953	4.021767139
F376	L	3.75	0.455904186	4.49016428	0.086639233	-0.64474595	-0.10548808	1.247603297
F376	L	5	0.455904186	6.44328928	0.086639233	-0.64474595	-0.21378712	-5.9927063
F376	EX	0	-4.93557501	13.66490078	-1.69006264	0.109045014	-5.30897856	34.72836685
F376	EX	1.25	-4.93557501	13.66490078	-1.69006264	0.109045014	-3.19639993	17.64723778
F376	EX	2.5	-4.93557501	13.66490078	-1.69006264	0.109045014	-1.08382142	0.56611228
F376	EX	3.75	-4.93557501	13.66490078	-1.69006264	0.109045014	1.028756976	-16.5150146
F376	EX	5	-4.93557501	13.66490078	-1.69006264	0.109045014	3.141335487	-33.5961418
F376	EY	0	1.683781862	0.24933745	-1.43684161	0.164049238	-3.71429729	0.63394469
F376	EY	1.25	1.683781862	0.24933745	-1.43684161	0.164049238	-1.91824508	0.322272837
F376	EY	2.5	1.683781862	0.24933745	-1.43684161	0.164049238	-0.12219287	0.010601026
F376	EY	3.75	1.683781862	0.24933745	-1.43684161	0.164049238	1.673859239	-0.30107081
F376	EY	5	1.683781862	0.24933745	-1.43684161	0.164049238	3.469911337	-0.6127426
F376	COMB1	0	0.74350661	-71.5925827	-0.21557926	-2.5848999	-0.56165332	-64.2893677
F376	COMB1	1.25	0.74350661	-42.3732033	-0.21557926	-2.5848999	-0.2921792	8.889119148
F376	COMB1	2.5	0.74350661	-0.4250769	-0.21557926	-2.5848999	-0.02270511	35.84083176
F376	COMB1	3.75	0.74350661	41.5230484	-0.21557926	-2.5848999	0.246768966	9.951810837
F376	COMB1	5	0.74350661	70.74242401	-0.21557926	-2.5848999	0.516243041	-62.1639824
F376	COMB2	0	-4.42201662	-41.1721382	-2.48445535	-1.39770091	-7.39430189	-12.9608383
F376	COMB2	1.25	-4.42201662	-17.7243233	-2.48445535	-1.39770091	-4.28873205	25.11409569
F376	COMB2	2.5	-4.42201662	13.97911549	-2.48445535	-1.39770091	-1.18316281	27.58637428
F376	COMB2	3.75	-4.42201662	45.68255234	-2.48445535	-1.39770091	1.922406554	-9.83369255
F376	COMB2	5	-4.42201662	69.13036346	-2.48445535	-1.39770091	5.027976036	-82.8564224
F376	COMB3	0	0.369177073	-50.8276024	-2.32368898	-1.35563707	-6.30184555	-37.4993134
F376	COMB3	1.25	0.369177073	-27.3797894	-2.32368898	-1.35563707	-3.39723444	12.64495564
F376	COMB3	2.5	0.369177073	4.323649406	-2.32368898	-1.35563707	-0.49262312	27.1865654
F376	COMB3	3.75	0.369177073	36.02708817	-2.32368898	-1.35563707	2.41198802	1.835831165
F376	COMB3	5	0.369177073	59.47490311	-2.32368898	-1.35563707	5.316599369	-59.1175613
F377	D	0	-0.59637749	-52.5906448	-0.51894337	0.104028702	-1.21930599	-46.629406
F377	D	1.25	-0.59637749	-30.8453331	-0.51894337	0.104028702	-0.57062674	6.600437641
F377	D	2.5	-0.59637749	-2.0343945	-0.51894337	0.104028702	0.078052483	27.26283264
F377	D	3.75	-0.59637749	26.77654457	-0.51894337	0.104028702	0.726731718	11.6864233
F377	D	5	-0.59637749	48.52185822	-0.51894337	0.104028702	1.375410914	-36.4574356
F377	L	0	0.482297778	-6.68133783	0.051991738	0.246625498	0.113397039	-6.26514959
F377	L	1.25	0.482297778	-4.72821331	0.051991738	0.246625498	0.048407368	1.27272141
F377	L	2.5	0.482297778	-0.11883784	0.051991738	0.246625498	-0.0165823	4.344446182
F377	L	3.75	0.482297778	4.490537643	0.051991738	0.246625498	-0.08157197	1.569816113
F377	L	5	0.482297778	6.443662167	0.051991738	0.246625498	-0.14656165	-5.67095995
F377	EX	0	-1.97635126	14.92811108	-0.5965668	-0.00794803	-1.21250641	35.10083008
F377	EX	1.25	-1.97635126	14.92811108	-0.5965668	-0.00794803	-0.46679792	16.4406929
F377	EX	2.5	-1.97635126	14.92811108	-0.5965668	-0.00794803	0.278910637	-2.21944714
F377	EX	3.75	-1.97635126	14.92811108	-0.5965668	-0.00794803	1.024619102	-20.8795872
F377	EX	5	-1.97635126	14.92811108	-0.5965668	-0.00794803	1.770327687	-39.5397263
F377	EY	0	0.215324134	-0.02422927	-0.1328803	-0.06553718	-0.03336295	-0.10314169
F377	EY	1.25	0.215324134	-0.02422927	-0.1328803	-0.06553718	0.132737428	-0.0728551
F377	EY	2.5	0.215324134	-0.02422927	-0.1328803	-0.06553718	0.298837811	-0.04256851
F377	EY	3.75	0.215324134	-0.02422927	-0.1328803	-0.06553718	0.464938194	-0.01228192
F377	EY	5	0.215324134	-0.02422927	-0.1328803	-0.06553718	0.631038606	0.018004667
F377	COMB1	0	0.056023464	-73.798912	-0.53954524	0.519435227	-1.28173184	-65.9795303
F377	COMB1	1.25	0.056023464	-44.5795403	-0.53954524	0.519435227	-0.60730028	9.956879616
F377	COMB1	2.5	0.056023464	-2.63141394	-0.53954524	0.519435227	0.067131288	39.66651535
F377	COMB1	3.75	0.056023464	39.31671143	-0.53954524	0.519435227	0.741562903	16.53541374
F377	COMB1	5	0.056023464	68.53608704	-0.53954524	0.519435227	1.415994406	-52.8224602
F377	COMB2	0	-2.45196891	-41.8818359	-1.1878171	0.158046737	-2.51000476	-14.6375303
F377	COMB2	1.25	-2.45196891	-18.4340248	-1.1878171	0.158046737	-1.02523327	24.32453346

F377	COMB2	2.5	-2.45196891	13.2694149	-1.1878171	0.158046737	0.459538102	27.68393898
F377	COMB2	3.75	-2.45196891	44.97285461	-1.1878171	0.158046737	1.944309473	-8.84900379
F377	COMB2	5	-2.45196891	68.42066956	-1.1878171	0.158046737	3.429080963	-80.9846039
F377	COMB3	0	-0.87073284	-52.6478844	-0.85595596	0.115599498	-1.66152179	-39.9859352
F377	COMB3	1.25	-0.87073284	-29.2000732	-0.85595596	0.115599498	-0.59157681	12.43368721
F377	COMB3	2.5	-0.87073284	2.503366232	-0.85595596	0.115599498	0.478368223	29.25065231
F377	COMB3	3.75	-0.87073284	34.20680618	-0.85595596	0.115599498	1.54831326	6.175271034
F377	COMB3	5	-0.87073284	57.65462112	-0.85595596	0.115599498	2.618258238	-52.5027695
F378	D	0	3.247863293	-71.1100922	-0.44413739	12.24409771	-0.97451913	-66.7195969
F378	D	0.75	3.247863293	-58.7697868	-0.44413739	12.24409771	-0.64141619	-17.7808723
F378	D	1.5	3.247863293	-42.6888504	-0.44413739	12.24409771	-0.30831325	20.49989319
F378	D	2.25	3.247863293	-26.6079178	-0.44413739	12.24409771	0.024789682	46.25238419
F378	D	3	3.247863293	-14.2676096	-0.44413739	12.24409771	0.357892632	61.34691238
F378	L	0	0.414527088	-11.0443497	0.119414955	4.844344616	0.248083234	-11.9655237
F378	L	0.75	0.414527088	-10.3412256	0.119414955	4.844344616	0.15852204	-3.85804534
F378	L	1.5	0.414527088	-8.23185062	0.119414955	4.844344616	0.068960853	3.194746971
F378	L	2.25	0.414527088	-6.12247658	0.119414955	4.844344616	-0.02060034	8.48972702
F378	L	3	0.414527088	-5.41935205	0.119414955	4.844344616	-0.11016154	12.73002148
F378	EX	0	-0.23104984	1.022736192	0.784972489	-2.55620313	1.7236619	1.661102295
F378	EX	0.75	-0.23104984	1.022736192	0.784972489	-2.55620313	1.134932756	0.894050419
F378	EX	1.5	-0.23104984	1.022736192	0.784972489	-2.55620313	0.546203554	0.126998529
F378	EX	2.25	-0.23104984	1.022736192	0.784972489	-2.55620313	-0.04252568	-0.64005339
F378	EX	3	-0.23104984	1.022736192	0.784972489	-2.55620313	-0.63125491	-1.40710533
F378	EY	0	-46.4938545	13.17825603	-0.24067827	-0.00064673	-0.57359064	42.5986824
F378	EY	0.75	-46.4938545	13.17825603	-0.24067827	-0.00064673	-0.39308199	32.71499252
F378	EY	1.5	-46.4938545	13.17825603	-0.24067827	-0.00064673	-0.21257335	22.83130455
F378	EY	2.25	-46.4938545	13.17825603	-0.24067827	-0.00064673	-0.0320647	12.94761467
F378	EY	3	-46.4938545	13.17825603	-0.24067827	-0.00064673	0.148443952	3.063925982
F378	COMB1	0	4.560679436	-103.003067	-0.34190094	22.44386864	-0.77248979	-99.2083511
F378	COMB1	0.75	4.560679436	-87.0697021	-0.34190094	22.44386864	-0.51606417	-27.5099182
F378	COMB1	1.5	4.560679436	-64.397583	-0.34190094	22.44386864	-0.25963855	29.71146774
F378	COMB1	2.25	4.560679436	-41.7254639	-0.34190094	22.44386864	-0.00321293	69.08642578
F378	COMB1	3	4.560679436	-25.7920952	-0.34190094	22.44386864	0.25321269	93.98432922
F378	COMB2	0	-11.3438683	-72.9348831	0.307904303	11.73639679	0.658210218	-58.6868896
F378	COMB2	0.75	-11.3438683	-59.7560768	0.307904303	11.73639679	0.427281976	-8.65463448
F378	COMB2	1.5	-11.3438683	-42.2066422	0.307904303	11.73639679	0.196353793	29.85453796
F378	COMB2	2.25	-11.3438683	-24.6572113	0.307904303	11.73639679	-0.0345744	54.65531158
F378	COMB2	3	-11.3438683	-11.4784031	0.307904303	11.73639679	-0.2655026	67.93299866
F378	COMB3	0	-45.3504944	-63.9852371	-0.43417442	13.57638836	-1.00441551	-28.5728531
F378	COMB3	0.75	-45.3504944	-50.8064308	-0.43417442	13.57638836	-0.67878485	14.74716949
F378	COMB3	1.5	-45.3504944	-33.2569923	-0.43417442	13.57638836	-0.35315415	46.54410553
F378	COMB3	2.25	-45.3504944	-15.7075644	-0.43417442	13.57638836	-0.02752347	64.63264465
F378	COMB3	3	-45.3504944	-2.52875519	-0.43417442	13.57638836	0.298107237	71.19809723
F379	D	0	2.889821529	-79.6521454	-0.81982422	-0.62918359	-1.63982284	-84.2423401
F379	D	0.75	2.889821529	-72.9415207	-0.81982422	-0.62918359	-1.02495492	-26.5521507
F379	D	1.5	2.889821529	-58.7496567	-0.81982422	-0.62918359	-0.41008684	23.29960632
F379	D	2.25	2.889821529	-44.557785	-0.81982422	-0.62918359	0.204781175	61.5723114
F379	D	3	2.889821529	-37.8471642	-0.81982422	-0.62918359	0.81964916	92.00657654
F379	L	0	0.983187497	-24.2355156	0.198654786	-0.00096045	0.399844646	-26.9748936
F379	L	0.75	0.983187497	-22.8292656	0.198654786	-0.00096045	0.250853598	-9.1498251
F379	L	1.5	0.983187497	-18.6105175	0.198654786	-0.00096045	0.101862557	6.565868378
F379	L	2.25	0.983187497	-14.3917675	0.198654786	-0.00096045	-0.04712849	18.76593971
F379	L	3	0.983187497	-12.9855175	0.198654786	-0.00096045	-0.19611955	28.85663795
F379	EX	0	-1.11497223	0.126889616	2.169880152	-3.66566467	4.207855701	0.372350067
F379	EX	0.75	-1.11497223	0.126889616	2.169880152	-3.66566467	2.580446005	0.277182877
F379	EX	1.5	-1.11497223	0.126889616	2.169880152	-3.66566467	0.953036308	0.182015702
F379	EX	2.25	-1.11497223	0.126889616	2.169880152	-3.66566467	-0.67437333	0.08684852
F379	EX	3	-1.11497223	0.126889616	2.169880152	-3.66566467	-2.30178285	-0.00831866
F379	EY	0	-46.0150375	12.70701408	-1.45423138	0.034145031	-2.9847579	41.22383118
F379	EY	0.75	-46.0150375	12.70701408	-1.45423138	0.034145031	-1.89408493	31.69357109
F379	EY	1.5	-46.0150375	12.70701408	-1.45423138	0.034145031	-0.80341166	22.16331482
F379	EY	2.25	-46.0150375	12.70701408	-1.45423138	0.034145031	0.287261516	12.63305759
F379	EY	3	-46.0150375	12.70701408	-1.45423138	0.034145031	1.377934813	3.102799892
F379	COMB1	0	5.040885925	-134.359406	-0.66594142	-0.75655705	-1.32803595	-144.250641
F379	COMB1	0.75	5.040885925	-124.056656	-0.66594142	-0.75655705	-0.82858008	-46.5023003
F379	COMB1	1.5	5.040885925	-100.276413	-0.66594142	-0.75655705	-0.32912412	38.46491623
F379	COMB1	2.25	5.040885925	-76.49617	-0.66594142	-0.75655705	0.170331821	103.9122772
F379	COMB1	3	5.040885925	-66.1934204	-0.66594142	-0.75655705	0.669787705	156.5785217
F379	COMB2	0	-12.3047161	-87.134903	0.989503801	-4.44415236	1.819068789	-83.580658
F379	COMB2	0.75	-12.3047161	-79.6457748	0.989503801	-4.44415236	1.076941013	-20.4915943
F379	COMB2	1.5	-12.3047161	-63.4154129	0.989503801	-4.44415236	0.334813446	33.70266724
F379	COMB2	2.25	-12.3047161	-47.1850433	0.989503801	-4.44415236	-0.4073143	74.63150024
F379	COMB2	3	-12.3047161	-39.695919	0.989503801	-4.44415236	-1.14944196	106.6655197
F379	COMB3	0	-45.3229904	-77.8866043	-1.64166999	-1.77977741	-3.40438437	-53.5492401
F379	COMB3	0.75	-45.3229904	-70.3974838	-1.64166999	-1.77977741	-2.17313242	2.603609085
F379	COMB3	1.5	-45.3229904	-54.1671181	-1.64166999	-1.77977741	-0.94188029	49.86165237
F379	COMB3	2.25	-45.3229904	-37.9367485	-1.64166999	-1.77977741	0.289371759	83.85426331
F379	COMB3	3	-45.3229904	-30.4476242	-1.64166999	-1.77977741	1.520623803	108.9520721
F380	D	0	-6.9885273	-41.7623749	-0.66509235	-15.5632544	-1.41948617	-41.9574814
F380	D	0.75	-6.9885273	-36.9220619	-0.66509235	-15.5632544	-0.92066705	-12.2170391
F380	D	1.5	-6.9885273	-28.3411274	-0.66509235	-15.5632544	-0.42184785	12.49043846
F380	D	2.25	-6.9885273	-19.7601929	-0.66509235	-15.5632544	0.076971278	30.29463959
F380	D	3	-6.9885273	-14.9198818	-0.66509235	-15.5632544	0.575790405	43.06587219
F380	L	0	-1.8662945	-10.6821671	0.111655243	-5.08621264	0.273487598	-12.2650023

F380	L	0.75	-1.8662945	-10.0493555	0.111655243	-5.08621264	0.189746186	-4.41158199
F380	L	1.5	-1.8662945	-8.15091896	0.111655243	-5.08621264	0.106004767	2.492620468
F380	L	2.25	-1.8662945	-6.25248289	0.111655243	-5.08621264	0.022263361	7.81479311
F380	L	3	-1.8662945	-5.61967087	0.111655243	-5.08621264	-0.06147804	12.187747
F380	EX	0	-9.35318661	-1.44881976	-0.93296403	-1.43817365	-3.14455414	-3.51421571
F380	EX	0.75	-9.35318661	-1.44881976	-0.93296403	-1.43817365	-2.44483161	-2.42760134
F380	EX	1.5	-9.35318661	-1.44881976	-0.93296403	-1.43817365	-1.7451086	-1.34098673
F380	EX	2.25	-9.35318661	-1.44881976	-0.93296403	-1.43817365	-1.04538572	-0.25437224
F380	EX	3	-9.35318661	-1.44881976	-0.93296403	-1.43817365	-0.34566292	0.83224231
F380	EY	0	2.641108274	13.13727093	-0.9807511	0.072941065	-2.03896117	43.60606003
F380	EY	0.75	2.641108274	13.13727093	-0.9807511	0.072941065	-1.30339825	33.75310898
F380	EY	1.5	2.641108274	13.13727093	-0.9807511	0.072941065	-0.56783503	23.90015984
F380	EY	2.25	2.641108274	13.13727093	-0.9807511	0.072941065	0.167728126	14.04720974
F380	EY	3	2.641108274	13.13727093	-0.9807511	0.072941065	0.903291225	4.19426012
F380	COMB1	0	-11.372304	-67.2063217	-0.61946243	-26.8138447	-1.26580322	-69.9729843
F380	COMB1	0.75	-11.372304	-60.3854446	-0.61946243	-26.8138447	-0.80120653	-21.7189789
F380	COMB1	1.5	-11.372304	-47.0508232	-0.61946243	-26.8138447	-0.33660981	18.9767189
F380	COMB1	2.25	-11.372304	-33.7162056	-0.61946243	-26.8138447	0.127986908	48.85723495
F380	COMB1	3	-11.372304	-26.8953323	-0.61946243	-26.8138447	0.592583656	71.17944336
F380	COMB2	0	-16.774435	-44.576664	-1.93772995	-19.4091072	-5.30119848	-37.820137
F380	COMB2	0.75	-16.774435	-39.295002	-1.93772995	-19.4091072	-3.84790134	-6.09787703
F380	COMB2	1.5	-16.774435	-29.6870117	-1.93772995	-19.4091072	-2.39460421	20.04076576
F380	COMB2	2.25	-16.774435	-20.0790234	-1.93772995	-19.4091072	-0.94130707	38.43262482
F380	COMB2	3	-16.774435	-14.7973604	-1.93772995	-19.4091072	0.511990011	51.24087143
F380	COMB3	0	-8.09892654	-33.8776207	-1.98684788	-18.3200111	-4.53575563	-3.23944879
F380	COMB3	0.75	-8.09892654	-28.5959568	-1.98684788	-18.3200111	-3.04562044	20.45853233
F380	COMB3	1.5	-8.09892654	-18.9879665	-1.98684788	-18.3200111	-1.55548477	38.57289505
F380	COMB3	2.25	-8.09892654	-9.37997913	-1.98684788	-18.3200111	-0.06534917	48.94047546
F380	COMB3	3	-8.09892654	-4.09831572	-1.98684788	-18.3200111	1.424786329	53.72443771
F381	D	0	-6.90767574	-41.7107697	0.662616313	15.51716328	1.410361886	-41.8687897
F381	D	0.75	-6.90767574	-36.8704567	0.662616313	15.51716328	0.913399875	-12.1670475
F381	D	1.5	-6.90767574	-28.2895241	0.662616313	15.51716328	0.416437745	12.5017271
F381	D	2.25	-6.90767574	-19.7085896	0.662616313	15.51716328	-0.08052436	30.26722336
F381	D	3	-6.90767574	-14.8682785	0.662616313	15.51716328	-0.57748646	42.99975967
F381	L	0	-1.72281671	-11.2496071	-0.11281795	5.280722618	-0.28123099	-12.721139
F381	L	0.75	-1.72281671	-10.5464821	-0.11281795	5.280722618	-0.19661756	-4.4597187
F381	L	1.5	-1.72281671	-8.43710804	-0.11281795	5.280722618	-0.11200412	2.747015953
F381	L	2.25	-1.72281671	-6.32773304	-0.11281795	5.280722618	-0.02739068	8.195939064
F381	L	3	-1.72281671	-5.62460804	-0.11281795	5.280722618	0.057222754	12.59017467
F381	EX	0	9.403723717	1.438163161	-1.34335792	-1.44116199	-3.64986801	3.491310835
F381	EX	0.75	9.403723717	1.438163161	-1.34335792	-1.44116199	-2.64234972	2.412688732
F381	EX	1.5	9.403723717	1.438163161	-1.34335792	-1.44116199	-1.63483155	1.334066629
F381	EX	2.25	9.403723717	1.438163161	-1.34335792	-1.44116199	-0.62731332	0.255444556
F381	EX	3	9.403723717	1.438163161	-1.34335792	-1.44116199	0.380204827	-0.82317758
F381	EY	0	2.640948534	13.13724899	0.980764031	-0.07294131	2.038995743	43.60599136
F381	EY	0.75	2.640948534	13.13724899	0.980764031	-0.07294131	1.303422809	33.75305557
F381	EY	1.5	2.640948534	13.13724899	0.980764031	-0.07294131	0.567850053	23.90011978
F381	EY	2.25	2.640948534	13.13724899	0.980764031	-0.07294131	-0.16772276	14.0471859
F381	EY	3	2.640948534	13.13724899	0.980764031	-0.07294131	-0.90329558	4.194252491
F381	COMB1	0	-11.0457172	-68.0522919	0.614630878	27.06975174	1.242464662	-70.5963669
F381	COMB1	0.75	-11.0457172	-61.1189194	0.614630878	27.06975174	0.781491756	-21.7360058
F381	COMB1	1.5	-11.0457172	-47.4468002	0.614630878	27.06975174	0.320518702	19.39729691
F381	COMB1	2.25	-11.0457172	-33.7746811	0.614630878	27.06975174	-0.14045432	49.43416977
F381	COMB1	3	-11.0457172	-26.8413067	0.614630878	27.06975174	-0.60142738	71.74398804
F381	COMB2	0	2.769006729	-41.7131996	-0.42122531	16.44186974	-1.74303746	-30.6199932
F381	COMB2	0.75	2.769006729	-36.4093895	-0.42122531	16.44186974	-1.4271183	-1.05086553
F381	COMB2	1.5	2.769006729	-26.7349567	-0.42122531	16.44186974	-1.1111995	22.90142059
F381	COMB2	2.25	2.769006729	-17.060524	-0.42122531	16.44186974	-0.79528064	39.05155563
F381	COMB2	3	2.769006729	-11.756712	-0.42122531	16.44186974	-0.47936174	49.58485031
F381	COMB3	0	-2.06057739	-33.0928001	1.266854048	17.42589378	2.383529425	-1.0833354
F381	COMB3	0.75	-2.06057739	-27.78899	1.266854048	17.42589378	1.433389187	22.02049446
F381	COMB3	1.5	-2.06057739	-18.1145554	1.266854048	17.42589378	0.483248979	39.50748062
F381	COMB3	2.25	-2.06057739	-8.4401226	1.266854048	17.42589378	-0.46689126	49.19231796
F381	COMB3	3	-2.06057739	-3.13631105	1.266854048	17.42589378	-1.41703141	53.26031494
F382	D	0	2.93266964	-79.78936	0.841940403	0.819766581	1.683699131	-84.3857193
F382	D	0.75	2.93266964	-73.078743	0.841940403	0.819766581	1.052244067	-26.592617
F382	D	1.5	2.93266964	-58.886879	0.841940403	0.819766581	0.420789003	23.36205292
F382	D	2.25	2.93266964	-44.6950073	0.841940403	0.819766581	-0.21066608	61.7376709
F382	D	3	2.93266964	-37.9843826	0.841940403	0.819766581	-0.84212118	92.27485657
F382	L	0	1.290955901	-33.8773956	-0.17967731	0.197680935	-0.36217052	-35.4880219
F382	L	0.75	1.290955901	-31.2055225	-0.17967731	0.197680935	-0.22741257	-10.7479506
F382	L	1.5	1.290955901	-23.1898994	-0.17967731	0.197680935	-0.09265462	9.984309196
F382	L	2.25	1.290955901	-15.1742764	-0.17967731	0.197680935	0.042103317	24.03688622
F382	L	3	1.290955901	-12.5024023	-0.17967731	0.197680935	0.176861256	34.08165359
F382	EX	0	0.901270747	-0.129942	2.211519718	-3.62601876	4.270362854	-0.36988869
F382	EX	0.75	0.901270747	-0.129942	2.211519718	-3.62601876	2.611723423	-0.27243224
F382	EX	1.5	0.901270747	-0.129942	2.211519718	-3.62601876	0.953084052	-0.17497575
F382	EX	2.25	0.901270747	-0.129942	2.211519718	-3.62601876	-0.7055552	-0.07751928
F382	EX	3	0.901270747	-0.129942	2.211519718	-3.62601876	-2.36419463	0.019937187
F382	EY	0	-46.0150375	12.70701408	1.454222083	-0.0341441	2.984739542	41.22383118
F382	EY	0.75	-46.0150375	12.70701408	1.454222083	-0.0341441	1.894073248	31.69357109
F382	EY	1.5	-46.0150375	12.70701408	1.454222083	-0.0341441	0.803407192	22.16331482
F382	EY	2.25	-46.0150375	12.70701408	1.454222083	-0.0341441	-0.28725901	12.63305664
F382	EY	3	-46.0150375	12.70701408	1.454222083	-0.0341441	-1.37792516	3.102799654

F382	COMB1	0	5.584733009	-149.951065	0.722844779	1.30000937	1.440966129	-158.043701
F382	COMB1	0.75	5.584733009	-137.623322	0.722844779	1.30000937	0.898832738	-49.1078606
F382	COMB1	1.5	5.584733009	-107.768089	0.722844779	1.30000937	0.356699407	44.00935745
F382	COMB1	2.25	5.584733009	-77.9128494	0.722844779	1.30000937	-0.185434	112.54422
F382	COMB1	3	5.584733009	-65.5851059	0.722844779	1.30000937	-0.72756737	165.2604828
F382	COMB2	0	-10.0759678	-90.5819931	3.57444191	-2.84066033	7.013818741	-87.1810608
F382	COMB2	0.75	-10.0759678	-82.6941986	3.57444191	-2.84066033	4.332988262	-21.6063442
F382	COMB2	1.5	-10.0759678	-65.2678223	3.57444191	-2.84066033	1.652157545	34.47555923
F382	COMB2	2.25	-10.0759678	-47.8414345	3.57444191	-2.84066033	-1.02867305	76.29535675
F382	COMB2	3	-10.0759678	-39.95364	3.57444191	-2.84066033	-3.70950365	108.6223373
F382	COMB3	0	-44.5459366	-81.1487808	3.051000834	-0.25502279	6.132941246	-56.6152229
F382	COMB3	0.75	-44.5459366	-73.2609863	3.051000834	-0.25502279	3.844691038	1.884581447
F382	COMB3	1.5	-44.5459366	-55.8346062	3.051000834	-0.25502279	1.556441307	50.89157486
F382	COMB3	2.25	-44.5459366	-38.4082222	3.051000834	-0.25502279	-0.73180872	85.63646698
F382	COMB3	3	-44.5459366	-30.5204277	3.051000834	-0.25502279	-3.02005863	110.8885422
F383	D	0	3.676298857	-85.3217621	0.455201805	-11.9351053	0.99503845	-79.2822495
F383	D	0.75	3.676298857	-71.111145	0.455201805	-11.9351053	0.65363723	-20.1523495
F383	D	1.5	3.676298857	-49.4192772	0.455201805	-11.9351053	0.312236011	25.5141201
F383	D	2.25	3.676298857	-27.7274113	0.455201805	-11.9351053	-0.02916525	53.97653961
F383	D	3	3.676298857	-13.5167904	0.455201805	-11.9351053	-0.37056649	68.97553253
F383	L	0	0.890243948	-26.0937824	-0.1109926	-4.76503134	-0.23129693	-25.2799187
F383	L	0.75	0.890243948	-23.4219074	-0.1109926	-4.76503134	-0.1480525	-6.37755489
F383	L	1.5	0.890243948	-15.4062853	-0.1109926	-4.76503134	-0.06480809	8.516997337
F383	L	2.25	0.890243948	-7.39066362	-0.1109926	-4.76503134	0.018436341	16.73186684
F383	L	3	0.890243948	-4.7187891	-0.1109926	-4.76503134	0.101680763	20.93892479
F383	EX	0	0.374444902	-1.00768924	1.172577024	-2.48408175	2.114880323	-1.63631749
F383	EX	0.75	0.374444902	-1.00768924	1.172577024	-2.48408175	1.235448122	-0.88055086
F383	EX	1.5	0.374444902	-1.00768924	1.172577024	-2.48408175	0.356015593	-0.12478416
F383	EX	2.25	0.374444902	-1.00768924	1.172577024	-2.48408175	-0.52341688	0.630982518
F383	EX	3	0.374444902	-1.00768924	1.172577024	-2.48408175	-1.40284932	1.386749268
F383	EY	0	-46.4938507	13.1782608	0.240675882	0.00064721	0.573588133	42.59869766
F383	EY	0.75	-46.4938507	13.1782608	0.240675882	0.00064721	0.393081307	32.71500397
F383	EY	1.5	-46.4938507	13.1782608	0.240675882	0.00064721	0.212574437	22.83131218
F383	EY	2.25	-46.4938507	13.1782608	0.240675882	0.00064721	0.032067589	12.94761944
F383	EY	3	-46.4938507	13.1782608	0.240675882	0.00064721	-0.14843927	3.063926697
F383	COMB1	0	5.835948944	-144.136169	0.368654013	-21.9461765	0.823971033	-135.586563
F383	COMB1	0.75	5.835948944	-122.808426	0.368654013	-21.9461765	0.547480643	-34.3869095
F383	COMB1	1.5	5.835948944	-83.9531937	0.368654013	-21.9461765	0.270990252	44.24414063
F383	COMB1	2.25	5.835948944	-45.0979538	0.368654013	-21.9461765	-0.00550016	91.54283905
F383	COMB1	3	5.835948944	-23.7702122	0.368654013	-21.9461765	-0.28199056	116.2729187
F383	COMB2	0	-10.1174717	-94.6991959	1.732429266	-16.6036663	3.341513395	-79.4845352
F383	COMB2	0.75	-10.1174717	-78.936409	1.732429266	-16.6036663	2.042191982	-13.7750416
F383	COMB2	1.5	-10.1174717	-53.6350288	1.732429266	-16.6036663	0.742870331	36.53539276
F383	COMB2	2.25	-10.1174717	-28.3336468	1.732429266	-16.6036663	-0.55645126	66.67747498
F383	COMB2	3	-10.1174717	-12.5708542	1.732429266	-16.6036663	-1.85577273	81.42049408
F383	COMB3	0	-44.560051	-84.2876358	1.065070629	-14.8146515	2.240386724	-46.9963417
F383	COMB3	0.75	-44.560051	-68.5248489	1.065070629	-14.8146515	1.441583991	10.90448284
F383	COMB3	1.5	-44.560051	-43.2234688	1.065070629	-14.8146515	0.642781317	53.40625
F383	COMB3	2.25	-44.560051	-17.9220886	1.065070629	-14.8146515	-0.15602142	75.7396698
F383	COMB3	3	-44.560051	-2.15929651	1.065070629	-14.8146515	-0.95482415	82.67401886
F384	D	0	0.222545326	-35.8818817	0.360414386	0.02422104	0.910650611	-25.754015
F384	D	1.25	0.222545326	-23.2412567	0.360414386	0.02422104	0.460132658	13.36266136
F384	D	2.5	0.222545326	3.530611277	0.360414386	0.02422104	0.009614653	25.90694618
F384	D	3.75	0.222545326	30.3024807	0.360414386	0.02422104	-0.44090337	4.536132813
F384	D	5	0.222545326	42.94310379	0.360414386	0.02422104	-0.89142138	-43.407074
F384	L	0	0.034832943	-12.045598	-0.06211334	-0.0217709	-0.15641101	-9.07315731
F384	L	1.25	0.034832943	-8.13934803	-0.06211334	-0.0217709	-0.07876935	4.356236935
F384	L	2.5	0.034832943	1.079402328	-0.06211334	-0.0217709	-0.00112767	8.853338242
F384	L	3.75	0.034832943	10.29815292	-0.06211334	-0.0217709	0.076514006	1.657731056
F384	L	5	0.034832943	14.20440197	-0.06211334	-0.0217709	0.154155686	-14.4701691
F384	EX	0	0.07454671	1.778250217	-0.51574999	-0.00026766	-1.27799773	5.31654501
F384	EX	1.25	0.07454671	1.778250217	-0.51574999	-0.00026766	-0.63331014	3.093732595
F384	EX	2.5	0.07454671	1.778250217	-0.51574999	-0.00026766	0.011377368	0.870919645
F384	EX	3.75	0.07454671	1.778250217	-0.51574999	-0.00026766	0.656064868	-1.35189319
F384	EX	5	0.07454671	1.778250217	-0.51574999	-0.00026766	1.300752401	-3.57470608
F384	EY	0	0.171493381	0.020547448	0.280234933	-0.0073563	0.703979492	0.031497363
F384	EY	1.25	0.171493381	0.020547448	0.280234933	-0.0073563	0.353685796	0.005813051
F384	EY	2.5	0.171493381	0.020547448	0.280234933	-0.0073563	0.003392089	-0.01987126
F384	EY	3.75	0.171493381	0.020547448	0.280234933	-0.0073563	-0.34690163	-0.04555557
F384	EY	5	0.171493381	0.020547448	0.280234933	-0.0073563	-0.69719529	-0.07123989
F384	COMB1	0	0.322787106	-62.3312149	0.333115935	-0.00576819	0.842523158	-45.4218674
F384	COMB1	1.25	0.322787106	-40.9124641	0.333115935	-0.00576819	0.426128238	23.00517273
F384	COMB1	2.5	0.322787106	5.963777065	0.333115935	-0.00576819	0.009733317	45.25367737
F384	COMB1	3.75	0.322787106	52.84002304	0.333115935	-0.00576819	-0.40666163	8.095728874
F384	COMB1	5	0.322787106	74.25876617	0.333115935	-0.00576819	-0.82305658	-75.2407608
F384	COMB2	0	0.375821233	-39.6233788	-0.08665785	0.015979998	-0.19406037	-24.3872128
F384	COMB2	1.25	0.375821233	-25.1202545	-0.08665785	0.015979998	-0.08573801	18.60685349
F384	COMB2	2.5	0.375821233	5.894114971	-0.08665785	0.015979998	0.022584256	30.8862381
F384	COMB2	3.75	0.375821233	36.90848541	-0.08665785	0.015979998	0.130906537	3.871565342
F384	COMB2	5	0.375821233	51.41160583	-0.08665785	0.015979998	0.239228785	-53.8577919
F384	COMB3	0	0.448195219	-40.8886185	0.490654856	0.010765832	1.243522882	-28.1919765
F384	COMB3	1.25	0.448195219	-26.3854923	0.490654856	0.010765832	0.63020432	16.38363838
F384	COMB3	2.5	0.448195219	4.628877163	0.490654856	0.010765832	0.016885735	30.24456978
F384	COMB3	3.75	0.448195219	35.6432457	0.490654856	0.010765832	-0.59643286	4.811445236

F389	COMB2	1.5	-12.181653	83.06858826	-0.54928386	3.21397543	-0.10315551	4.178723335
F389	COMB2	2.25	-12.181653	99.29897308	-0.54928386	3.21397543	0.308807552	-64.7554779
F389	COMB2	3	-12.181653	106.7881012	-0.54928386	3.21397543	0.720770657	-142.584503
F389	COMB3	0	-44.8056183	68.65206146	-1.93107247	0.577589691	-2.17914224	108.8658524
F389	COMB3	0.75	-44.8056183	76.14118958	-1.93107247	0.577589691	-0.73083717	55.11468887
F389	COMB3	1.5	-44.8056183	92.3715744	-1.93107247	0.577589691	0.717468083	-7.53130102
F389	COMB3	2.25	-44.8056183	108.6019592	-1.93107247	0.577589691	2.165773153	-83.4427414
F389	COMB3	3	-44.8056183	116.0910797	-1.93107247	0.577589691	3.614078283	-168.248993
F390	D	0	-7.29089737	21.05930519	-0.40015179	10.55782604	-0.18837957	43.14044952
F390	D	0.75	-7.29089737	25.89962006	-0.40015179	10.55782604	0.111734435	25.76463127
F390	D	1.5	-7.29089737	34.4805603	-0.40015179	10.55782604	0.411848456	3.355839252
F390	D	2.25	-7.29089737	43.06150436	-0.40015179	10.55782604	0.711962461	-25.9562416
F390	D	3	-7.29089737	47.90181732	-0.40015179	10.55782604	1.012076497	-60.3012924
F390	L	0	-1.78290009	6.461140633	0.173254699	4.085680962	0.151370183	12.20595837
F390	L	0.75	-1.78290009	7.093953133	0.173254699	4.085680962	0.021429077	7.201896667
F390	L	1.5	-1.78290009	8.992390633	0.173254699	4.085680962	-0.10851202	1.248616099
F390	L	2.25	-1.78290009	10.89083004	0.173254699	4.085680962	-0.23845313	-6.28669739
F390	L	3	-1.78290009	11.52364254	0.173254699	4.085680962	-0.36839423	-14.7712297
F390	EX	0	-8.85360527	0.325310886	0.645999908	3.728018999	0.839457452	0.80266124
F390	EX	0.75	-8.85360527	0.325310886	0.645999908	3.728018999	0.354957312	0.558677912
F390	EX	1.5	-8.85360527	0.325310886	0.645999908	3.728018999	-0.12954287	0.314694643
F390	EX	2.25	-8.85360527	0.325310886	0.645999908	3.728018999	-0.614043	0.070711367
F390	EX	3	-8.85360527	0.325310886	0.645999908	3.728018999	-1.09854317	-0.17327191
F390	EY	0	1.808563232	13.07938099	-1.03538668	-0.06396426	-1.18059969	4.215456963
F390	EY	0.75	1.808563232	13.07938099	-1.03538668	-0.06396426	-0.40405941	-5.59408331
F390	EY	1.5	1.808563232	13.07938099	-1.03538668	-0.06396426	0.372480959	-15.4036236
F390	EY	2.25	1.808563232	13.07938099	-1.03538668	-0.06396426	1.149021387	-25.2131634
F390	EY	3	1.808563232	13.07938099	-1.03538668	-0.06396426	1.925561786	-35.0227051
F390	COMB1	0	-11.601717	35.60898972	-0.20297462	19.20648003	0.016136805	71.29807281
F390	COMB1	0.75	-11.601717	42.42987061	-0.20297462	19.20648003	0.168367848	42.44059372
F390	COMB1	1.5	-11.601717	55.76449966	-0.20297462	19.20648003	0.3205989	6.024792671
F390	COMB1	2.25	-11.601717	69.09913635	-0.20297462	19.20648003	0.472829938	-41.2062035
F390	COMB1	3	-11.601717	75.9200058	-0.20297462	19.20648003	0.625061035	-95.9955215
F390	COMB2	0	-16.8108406	28.60423088	-0.02312105	16.21105766	0.346832603	51.30097198
F390	COMB2	0.75	-16.8108406	33.88589859	-0.02312105	16.21105766	0.364173412	28.13755608
F390	COMB2	1.5	-16.8108406	43.49389267	-0.02312105	16.21105766	0.381514221	-0.60948712
F390	COMB2	2.25	-16.8108406	53.10189438	-0.02312105	16.21105766	0.39885506	-37.1033249
F390	COMB2	3	-16.8108406	58.38355637	-0.02312105	16.21105766	0.416195959	-79.1807861
F390	COMB3	0	-9.10695076	37.98335266	-1.24925017	13.4798708	-1.12531757	53.82141495
F390	COMB3	0.75	-9.10695076	43.26501846	-1.24925017	13.4798708	-0.1883795	23.62365532
F390	COMB3	1.5	-9.10695076	52.87301636	-1.24925017	13.4798708	0.748558581	-12.1577301
F390	COMB3	2.25	-9.10695076	62.48101425	-1.24925017	13.4798708	1.685496688	-55.6859131
F390	COMB3	3	-9.10695076	67.76268005	-1.24925017	13.4798708	2.622434855	-104.797714
F391	D	0	-7.21740389	21.0225544	0.413052768	-10.4596491	0.204754889	43.07546234
F391	D	0.75	-7.21740389	25.86286926	0.413052768	-10.4596491	-0.10503486	25.72720718
F391	D	1.5	-7.21740389	34.44380951	0.413052768	-10.4596491	-0.4148246	3.345979929
F391	D	2.25	-7.21740389	43.02474976	0.413052768	-10.4596491	-0.72461432	-25.9385376
F391	D	3	-7.21740389	47.86506653	0.413052768	-10.4596491	-1.03440404	-60.2560272
F391	L	0	-1.64516294	6.569394588	-0.16585362	-4.17799091	-0.14166102	12.61618137
F391	L	0.75	-1.64516294	7.272520065	-0.16585362	-4.17799091	-0.01727074	7.513351917
F391	L	1.5	-1.64516294	9.381896019	-0.16585362	-4.17799091	0.107119545	1.355833054
F391	L	2.25	-1.64516294	11.49127293	-0.16585362	-4.17799091	0.23150982	-6.55949974
F391	L	3	-1.64516294	12.19439697	-0.16585362	-4.17799091	0.355900139	-15.5295229
F391	EX	0	8.908968925	-0.32325992	1.112855196	3.68999958	1.545098662	-0.79383862
F391	EX	0.75	8.908968925	-0.32325992	1.112855196	3.68999958	0.710456789	-0.55139351
F391	EX	1.5	8.908968925	-0.32325992	1.112855196	3.68999958	-0.12418497	-0.30894843
F391	EX	2.25	8.908968925	-0.32325992	1.112855196	3.68999958	-0.95882672	-0.06650338
F391	EX	3	8.908968925	-0.32325992	1.112855196	3.68999958	-1.79346848	0.175941676
F391	EY	0	1.808404446	13.07935905	1.035385609	0.063963264	1.180594206	4.21544981
F391	EY	0.75	1.808404446	13.07935905	1.035385609	0.063963264	0.404054552	-5.59407473
F391	EY	1.5	1.808404446	13.07935905	1.035385609	0.063963264	-0.37248507	-15.4035988
F391	EY	2.25	1.808404446	13.07935905	1.035385609	0.063963264	-1.14902472	-25.2131233
F391	EY	3	1.808404446	13.07935905	1.035385609	0.063963264	-1.92556429	-35.0226479
F391	COMB1	0	-11.2931452	35.73809814	0.230297551	-19.2363644	0.019048246	71.87644958
F391	COMB1	0.75	-11.2931452	42.67147446	0.230297551	-19.2363644	-0.153675	42.89401245
F391	COMB1	1.5	-11.2931452	56.34360886	0.230297551	-19.2363644	-0.32639825	6.184508801
F391	COMB1	2.25	-11.2931452	70.01573944	0.230297551	-19.2363644	-0.49912152	-41.6214447
F391	COMB1	3	-11.2931452	76.94911957	0.230297551	-19.2363644	-0.67184472	-97.1544647
F391	COMB2	0	1.69393003	27.9284668	1.859413028	-8.45940113	2.141433716	49.70957565
F391	COMB2	0.75	1.69393003	33.23228073	1.859413028	-8.45940113	0.746873081	27.04744911
F391	COMB2	1.5	1.69393003	42.90672302	1.859413028	-8.45940113	-0.64768744	-1.23152888
F391	COMB2	2.25	1.69393003	52.58116531	1.859413028	-8.45940113	-2.04224801	-37.3126717
F391	COMB2	3	1.69393003	57.88497925	1.859413028	-8.45940113	-3.43680835	-79.0106659
F391	COMB3	0	-3.39135027	37.77454376	1.819165826	-11.0691881	1.896699429	53.37949753
F391	COMB3	0.75	-3.39135027	43.0783577	1.819165826	-11.0691881	0.532324314	23.33280563
F391	COMB3	1.5	-3.39135027	52.75279999	1.819165826	-11.0691881	-0.8320508	-12.3307314
F391	COMB3	2.25	-3.39135027	62.42723846	1.819165826	-11.0691881	-2.19642591	-55.7964325
F391	COMB3	3	-3.39135027	67.73105621	1.819165826	-11.0691881	-3.56080079	-104.87899
F392	D	0	2.875695944	48.1193161	0.875386238	0.38958776	0.831477463	92.23394775
F392	D	0.75	2.875695944	54.82994461	0.875386238	0.38958776	0.174937442	54.09553146
F392	D	1.5	2.875695944	69.0218277	0.875386238	0.38958776	-0.48160261	8.118672371
F392	D	2.25	2.875695944	83.21370697	0.875386238	0.38958776	-1.13814259	-49.4372597
F392	D	3	2.875695944	89.92433167	0.875386238	0.38958776	-1.79468274	-114.831642
F392	L	0	1.269209981	15.78681946	-0.16019271	-0.19808379	-0.15117052	34.03832245

F392	L	0.75	1.269209981	18.45869637	-0.16019271	-0.19808379	-0.03102592	21.53023529
F392	L	1.5	1.269209981	26.47432518	-0.16019271	-0.19808379	0.089118682	5.014327526
F392	L	2.25	1.269209981	34.4899559	-0.16019271	-0.19808379	0.209263295	-18.1812744
F392	L	3	1.269209981	37.1618309	-0.16019271	-0.19808379	0.329407871	-45.3846931
F392	EX	0	0.870221913	-0.12281857	0.659322917	3.580441713	0.264674902	-0.00896843
F392	EX	0.75	0.870221913	-0.12281857	0.659322917	3.580441713	-0.22981754	0.083145544
F392	EX	1.5	0.870221913	-0.12281857	0.659322917	3.580441713	-0.72430992	0.175259516
F392	EX	2.25	0.870221913	-0.12281857	0.659322917	3.580441713	-1.21880245	0.267373502
F392	EX	3	0.870221913	-0.12281857	0.659322917	3.580441713	-1.71329486	0.359487474
F392	EY	0	-45.4627304	12.78545094	1.228103399	0.047161281	1.398098469	3.074246168
F392	EY	0.75	-45.4627304	12.78545094	1.228103399	0.047161281	0.477020442	-6.51484776
F392	EY	1.5	-45.4627304	12.78545094	1.228103399	0.047161281	-0.44405761	-16.103941
F392	EY	2.25	-45.4627304	12.78545094	1.228103399	0.047161281	-1.36513567	-25.6930351
F392	EY	3	-45.4627304	12.78545094	1.228103399	0.047161281	-2.28621387	-35.2821312
F392	COMB1	0	5.481571198	83.00209045	0.79415518	0.150571272	0.755900145	165.1420593
F392	COMB1	0.75	5.481571198	95.32984924	0.79415518	0.150571272	0.160283461	99.36301422
F392	COMB1	1.5	5.481571198	125.185112	0.79415518	0.150571272	-0.43533322	17.76533127
F392	COMB1	2.25	5.481571198	155.0403748	0.79415518	0.150571272	-1.03094983	-88.4147491
F392	COMB1	3	5.481571198	167.3681183	0.79415518	0.150571272	-1.62656665	-210.413483
F392	COMB2	0	-10.0007982	59.39842987	1.937946677	4.06728363	1.539772153	108.526825
F392	COMB2	0.75	-10.0007982	67.28623199	1.937946677	4.06728363	0.086311445	61.61621094
F392	COMB2	1.5	-10.0007982	84.71263123	1.937946677	4.06728363	-1.36714923	5.212771416
F392	COMB2	2.25	-10.0007982	102.1390305	1.937946677	4.06728363	-2.82061005	-65.4527969
F392	COMB2	3	-10.0007982	110.026825	1.937946677	4.06728363	-4.27407074	-145.611206
F392	COMB3	0	-44.0424652	68.8841629	2.365890026	1.524029255	2.376808643	110.7928543
F392	COMB3	0.75	-44.0424652	76.77196503	2.365890026	1.524029255	0.60239011	56.76793289
F392	COMB3	1.5	-44.0424652	94.19836426	2.365890026	1.524029255	-1.17202842	-6.74981213
F392	COMB3	2.25	-44.0424652	111.6247635	2.365890026	1.524029255	-2.94644713	-84.529686
F392	COMB3	3	-44.0424652	119.512558	2.365890026	1.524029255	-4.72086573	-171.802399
F393	D	0	4.043000698	22.13864326	0.671319425	13.29488564	0.555741131	68.94073486
F393	D	0.75	4.043000698	36.34927368	0.671319425	13.29488564	0.052251298	47.47533417
F393	D	1.5	4.043000698	58.04115677	0.671319425	13.29488564	-0.45123857	12.54648113
F393	D	2.25	4.043000698	79.73304749	0.671319425	13.29488564	-0.95472842	-39.5864525
F393	D	3	4.043000698	93.94367981	0.671319425	13.29488564	-1.45821834	-105.182838
F393	L	0	0.834336042	7.297987938	-0.07744153	4.203318119	-0.0392126	20.95624733
F393	L	0.75	0.834336042	9.969863892	-0.07744153	4.203318119	0.01886858	14.8147831
F393	L	1.5	0.834336042	17.98549461	-0.07744153	4.203318119	0.076949753	4.665503502
F393	L	2.25	0.834336042	26.00112343	-0.07744153	4.203318119	0.13503094	-12.1634712
F393	L	3	0.834336042	28.67300034	-0.07744153	4.203318119	0.193112105	-33.0002632
F393	EX	0	0.900249004	0.746610463	0.268560767	2.756910801	-0.0938158	1.386315823
F393	EX	0.75	0.900249004	0.746610463	0.268560767	2.756910801	-0.2952365	0.826357722
F393	EX	1.5	0.900249004	0.746610463	0.268560767	2.756910801	-0.49665716	0.266399562
F393	EX	2.25	0.900249004	0.746610463	0.268560767	2.756910801	-0.6980778	-0.29355863
F393	EX	3	0.900249004	0.746610463	0.268560767	2.756910801	-0.89949852	-0.85351676
F393	EY	0	-46.2136192	13.15771294	0.412172914	-0.03085096	0.555537701	3.071283102
F393	EY	0.75	-46.2136192	13.15771294	0.412172914	-0.03085096	0.246407837	-6.79700708
F393	EY	1.5	-46.2136192	13.15771294	0.412172914	-0.03085096	-0.06272203	-16.6652966
F393	EY	2.25	-46.2136192	13.15771294	0.412172914	-0.03085096	-0.37185189	-26.5335865
F393	EY	3	-46.2136192	13.15771294	0.412172914	-0.03085096	-0.68098176	-36.4018784
F393	COMB1	0	6.186538219	38.24315262	0.681676924	22.67917061	0.604149222	116.2588806
F393	COMB1	0.75	6.186538219	59.57091141	0.681676924	22.67917061	0.092891291	80.67405701
F393	COMB1	1.5	6.186538219	98.42617798	0.681676924	22.67917061	-0.41836667	22.52058411
F393	COMB1	2.25	6.186538219	137.2814484	0.681676924	22.67917061	-0.92962462	-66.9652939
F393	COMB1	3	6.186538219	158.6092072	0.681676924	22.67917061	-1.44088268	-179.019821
F393	COMB2	0	-9.11756516	30.46186256	1.088286161	18.12735939	0.649071276	81.39128113
F393	COMB2	0.75	-9.11756516	46.2246666	1.088286161	18.12735939	-0.16714382	53.22998047
F393	COMB2	1.5	-9.11756516	71.52606964	1.088286161	18.12735939	-0.98335892	9.669593811
F393	COMB2	2.25	-9.11756516	96.82746887	1.088286161	18.12735939	-1.79957402	-54.0591812
F393	COMB2	3	-9.11756516	112.5902786	1.088286161	18.12735939	-2.61578918	-133.187042
F393	COMB3	0	-43.7327538	39.59522247	1.197869539	16.11970901	1.124938846	82.65052795
F393	COMB3	0.75	-43.7327538	55.35802841	1.197869539	16.11970901	0.226536199	47.63920212
F393	COMB3	1.5	-43.7327538	80.65942383	1.197869539	16.11970901	-0.67186648	-2.77120638
F393	COMB3	2.25	-43.7327538	105.9608307	1.197869539	16.11970901	-1.57026911	-73.3500061
F393	COMB3	3	-43.7327538	121.7236404	1.197869539	16.11970901	-2.4686718	-159.327896
F394	D	0	3.083203554	-44.2242393	0.395769984	0.021024719	1.027409792	-41.4380035
F394	D	1.25	3.083203554	-29.7836151	0.395769984	0.021024719	0.53269732	6.981619835
F394	D	2.5	3.083203554	-1.21174419	0.395769984	0.021024719	0.037984814	26.57884979
F394	D	3.75	3.083203554	27.3601265	0.395769984	0.021024719	-0.45672762	10.01098061
F394	D	5	3.083203554	41.80075073	0.395769984	0.021024719	-0.9514401	-35.3792801
F394	L	0	1.835637808	-12.7606125	-0.05881538	-0.00594059	-0.15734921	-11.0904703
F394	L	1.25	1.835637808	-8.85436249	-0.05881538	-0.00594059	-0.08382998	3.232691526
F394	L	2.5	1.835637808	0.36438787	-0.05881538	-0.00594059	-0.01031075	8.623561859
F394	L	3.75	1.835637808	9.583138466	-0.05881538	-0.00594059	0.063208491	2.321721792
F394	L	5	1.835637808	13.48938847	-0.05881538	-0.00594059	0.13672772	-12.9124098
F394	EX	0	-16.614172	15.36478806	-0.68775833	0.012109684	-1.82124698	41.00956726
F394	EX	1.25	-16.614172	15.36478806	-0.68775833	0.012109684	-0.96154904	21.80358124
F394	EX	2.5	-16.614172	15.36478806	-0.68775833	0.012109684	-0.10185119	2.597595215
F394	EX	3.75	-16.614172	15.36478806	-0.68775833	0.012109684	0.757846713	-16.6083908
F394	EX	5	-16.614172	15.36478806	-0.68775833	0.012109684	1.617544651	-35.8143768
F394	EY	0	-0.03846803	0.064414866	0.427366436	0.051472712	1.264410734	0.165563166
F394	EY	1.25	-0.03846803	0.064414866	0.427366436	0.051472712	0.730202675	0.085044578
F394	EY	2.5	-0.03846803	0.064414866	0.427366436	0.051472712	0.195994601	0.004525997
F394	EY	3.75	-0.03846803	0.064414866	0.427366436	0.051472712	-0.33821347	-0.07599258
F394	EY	5	-0.03846803	0.064414866	0.427366436	0.051472712	-0.8724215	-0.15651117

F394	COMB1	0	6.636864662	-73.4860687	0.38081935	0.015724724	0.981132984	-67.4703598
F394	COMB1	1.25	6.636864662	-49.9073181	0.38081935	0.015724724	0.505108774	13.55025005
F394	COMB1	2.5	6.636864662	-0.87107241	0.38081935	0.015724724	0.029084586	45.69231796
F394	COMB1	3.75	6.636864662	48.16517258	0.38081935	0.015724724	-0.44693959	15.72793198
F394	COMB1	5	6.636864662	71.74391937	0.38081935	0.015724724	-0.92296374	-63.114994
F394	COMB2	0	-13.3921947	-34.532196	-0.18017782	0.048952095	-0.45748597	-4.50634909
F394	COMB2	1.25	-13.3921947	-18.1390743	-0.18017782	0.048952095	-0.23226371	30.94249344
F394	COMB2	2.5	-13.3921947	14.76529694	-0.18017782	0.048952095	-0.00704151	33.31414795
F394	COMB2	3.75	-13.3921947	47.66966629	-0.18017782	0.048952095	0.218180776	-5.97074938
F394	COMB2	5	-13.3921947	64.06278992	-0.18017782	0.048952095	0.443403006	-78.3328323
F394	COMB3	0	-1.45826566	-45.5474968	0.629122496	0.078065567	1.783153772	-33.9115486
F394	COMB3	1.25	-1.45826566	-29.154377	0.629122496	0.078065567	0.996750593	15.30642319
F394	COMB3	2.5	-1.45826566	3.749994516	0.629122496	0.078065567	0.210347384	31.4472084
F394	COMB3	3.75	-1.45826566	36.65436554	0.629122496	0.078065567	-0.57605577	5.931437016
F394	COMB3	5	-1.45826566	53.04748917	0.629122496	0.078065567	-1.36245894	-52.6615181
F395	D	0	9.229459763	-47.9421425	0.282796055	-0.02796564	0.655168533	-49.1282616
F395	D	1.25	9.229459763	-33.5015221	0.282796055	-0.02796564	0.301673472	3.938742161
F395	D	2.5	9.229459763	-4.92965031	0.282796055	-0.02796564	-0.05182162	28.18335342
F395	D	3.75	9.229459763	23.64221954	0.282796055	-0.02796564	-0.40531668	16.26286888
F395	D	5	9.229459763	38.08284378	0.282796055	-0.02796564	-0.75881177	-24.4800091
F395	L	0	3.442372322	-13.4436092	-0.09168008	-0.01184538	-0.22419584	-12.5189209
F395	L	1.25	3.442372322	-9.53735924	-0.09168008	-0.01184538	-0.10959573	2.657986164
F395	L	2.5	3.442372322	-0.31860885	-0.09168008	-0.01184538	0.005004373	8.902602196
F395	L	3.75	3.442372322	8.900140762	-0.09168008	-0.01184538	0.119604476	3.454508305
F395	L	5	3.442372322	12.80639172	-0.09168008	-0.01184538	0.234204575	-10.9258776
F395	EX	0	-9.64534569	16.27009201	-0.80161393	-0.0260606	-1.89609671	37.59044266
F395	EX	1.25	-9.64534569	16.27009201	-0.80161393	-0.0260606	-0.89407909	17.25282669
F395	EX	2.5	-9.64534569	16.27009201	-0.80161393	-0.0260606	0.107938342	-3.08478689
F395	EX	3.75	-9.64534569	16.27009201	-0.80161393	-0.0260606	1.109955788	-23.4224014
F395	EX	5	-9.64534569	16.27009201	-0.80161393	-0.0260606	2.111973286	-43.7600174
F395	EY	0	0.008117895	0.053618118	1.592345119	0.157359868	3.939170122	0.120679989
F395	EY	1.25	0.008117895	0.053618118	1.592345119	0.157359868	1.948738694	0.053657338
F395	EY	2.5	0.008117895	0.053618118	1.592345119	0.157359868	-0.04169274	-0.01336531
F395	EY	3.75	0.008117895	0.053618118	1.592345119	0.157359868	-2.03212428	-0.08038796
F395	EY	5	0.008117895	0.053618118	1.592345119	0.157359868	-4.02255583	-0.1474106
F395	COMB1	0	16.58314705	-79.0403442	0.192667127	-0.05251138	0.427488863	-78.9841843
F395	COMB1	1.25	16.58314705	-55.4616013	0.192667127	-0.05251138	0.186654985	8.979268074
F395	COMB1	2.5	16.58314705	-6.42535448	0.192667127	-0.05251138	-0.05417895	48.06418991
F395	COMB1	3.75	16.58314705	42.61088943	0.192667127	-0.05251138	-0.29501286	25.04265594
F395	COMB1	5	16.58314705	66.18963623	0.192667127	-0.05251138	-0.53584683	-46.8574142
F395	COMB2	0	0.794904232	-37.7175522	-0.06002508	-0.01049959	-0.10431623	-16.5840111
F395	COMB2	1.25	0.794904232	-21.3244305	-0.06002508	-0.01049959	-0.0292847	22.84652328
F395	COMB2	2.5	0.794904232	11.57993889	-0.06002508	-0.01049959	0.045746647	29.19987679
F395	COMB2	3.75	0.794904232	44.48431015	-0.06002508	-0.01049959	0.120777987	-6.10332584
F395	COMB2	5	0.794904232	60.87743378	-0.06002508	-0.01049959	0.195809379	-74.4837112
F395	COMB3	0	7.745519638	-49.3926086	1.68751061	0.123923548	4.156163216	-43.5604324
F395	COMB3	1.25	7.745519638	-32.999485	1.68751061	0.123923548	2.046775103	10.46392536
F395	COMB3	2.5	7.745519638	-0.09511697	1.68751061	0.123923548	-0.06261312	31.41110039
F395	COMB3	3.75	7.745519638	32.80925369	1.68751061	0.123923548	-2.17200136	10.70171833
F395	COMB3	5	7.745519638	49.20237732	1.68751061	0.123923548	-4.28138971	-43.0848465
F396	D	0	9.084229469	-37.7378349	-0.29551739	0.027290434	-0.79210824	-23.6899242
F396	D	1.25	9.084229469	-23.2972088	-0.29551739	0.027290434	-0.42271149	16.62169075
F396	D	2.5	9.084229469	5.274660587	-0.29551739	0.027290434	-0.05331474	28.11091614
F396	D	3.75	9.084229469	33.84653091	-0.29551739	0.027290434	0.316082001	3.435039997
F396	D	5	9.084229469	48.28715134	-0.29551739	0.027290434	0.685478747	-50.0632286
F396	L	0	3.538592815	-12.9242315	0.081184201	0.013274198	0.20643352	-11.2039957
F396	L	1.25	3.538592815	-9.01798153	0.081184201	0.013274198	0.104953252	3.323689222
F396	L	2.5	3.538592815	0.200769007	0.081184201	0.013274198	0.003472997	8.919082642
F396	L	3.75	3.538592815	9.419519424	0.081184201	0.013274198	-0.09800725	2.821766615
F396	L	5	3.538592815	13.32576942	0.081184201	0.013274198	-0.19948751	-12.2078419
F396	EX	0	-11.6578417	16.13067627	-0.76971537	-0.02611009	-2.03228617	43.39286041
F396	EX	1.25	-11.6578417	16.13067627	-0.76971537	-0.02611009	-1.07014203	23.22951698
F396	EX	2.5	-11.6578417	16.13067627	-0.76971537	-0.02611009	-0.10799766	3.066170692
F396	EX	3.75	-11.6578417	16.13067627	-0.76971537	-0.02611009	0.8541466	-17.0971737
F396	EX	5	-11.6578417	16.13067627	-0.76971537	-0.02611009	1.816290855	-37.2605209
F396	EY	0	0.008114836	-0.05362033	-1.59234238	-0.15736189	-4.02254772	-0.14741643
F396	EY	1.25	0.008114836	-0.05362033	-1.59234238	-0.15736189	-2.03211951	-0.080391
F396	EY	2.5	0.008114836	-0.05362033	-1.59234238	-0.15736189	-0.04169141	-0.01336558
F396	EY	3.75	0.008114836	-0.05362033	-1.59234238	-0.15736189	1.948736548	0.053659841
F396	EY	5	0.008114836	-0.05362033	-1.59234238	-0.15736189	3.9391644	0.120685257
F396	COMB1	0	16.56282425	-65.9641724	-0.22472613	0.053987239	-0.62023622	-46.3543015
F396	COMB1	1.25	16.56282425	-42.3854218	-0.22472613	0.053987239	-0.33932859	25.26393127
F396	COMB1	2.5	16.56282425	6.650823116	-0.22472613	0.053987239	-0.05842089	48.00363159
F396	COMB1	3.75	16.56282425	55.68706894	-0.22472613	0.053987239	0.222486779	8.636875153
F396	COMB1	5	16.56282425	79.26581573	-0.22472613	0.053987239	0.503394485	-79.6084213
F396	COMB2	0	-1.41021264	-27.0174999	-1.58296347	-0.04375662	-4.1372056	16.46149445
F396	COMB2	1.25	-1.41021264	-10.6243753	-1.58296347	-0.04375662	-2.15850139	42.51696396
F396	COMB2	2.5	-1.41021264	22.27999496	-1.58296347	-0.04375662	-0.17979686	35.4952507
F396	COMB2	3.75	-1.41021264	55.18436432	-1.58296347	-0.04375662	1.798907638	-13.1830235
F396	COMB2	5	-1.41021264	71.57748413	-1.58296347	-0.04375662	3.777611971	-94.9384842
F396	COMB3	0	6.989398003	-38.6709976	-2.19914007	-0.14061834	-5.63053226	-14.8897152
F396	COMB3	1.25	6.989398003	-22.2778721	-2.19914007	-0.14061834	-2.88160682	25.73262405
F396	COMB3	2.5	6.989398003	10.62649727	-2.19914007	-0.14061834	-0.13268173	33.27778244
F396	COMB3	3.75	6.989398003	43.53086853	-2.19914007	-0.14061834	2.616243362	-0.83361822

F396	COMB3	5	6.989398003	59.92398834	-2.19914007	-0.14061834	5.365168571	-68.0222015
F397	D	0	2.944959641	-42.1850128	-0.40588012	-0.01731738	-0.9750315	-36.4070206
F397	D	1.25	2.944959641	-27.7443905	-0.40588012	-0.01731738	-0.46768132	9.463572502
F397	D	2.5	2.944959641	0.827479184	-0.40588012	-0.01731738	0.039668836	26.51177216
F397	D	3.75	2.944959641	29.39934921	-0.40588012	-0.01731738	0.547019005	7.394874573
F397	D	5	2.944959641	43.83996964	-0.40588012	-0.01731738	1.054369092	-40.5444183
F397	L	0	1.889829397	-13.4207077	0.048438717	0.007113498	0.112210773	-12.7128944
F397	L	1.25	1.889829397	-9.51445675	0.048438717	0.007113498	0.051662371	2.435386181
F397	L	2.5	1.889829397	-0.2957069	0.048438717	0.007113498	-0.00888603	8.651373863
F397	L	3.75	1.889829397	8.923043251	0.048438717	0.007113498	-0.06943443	3.17465353
F397	L	5	1.889829397	12.8292942	0.048438717	0.007113498	-0.12998283	-11.2343588
F397	EX	0	-4.73548365	15.21702576	-0.64703935	0.010690792	-1.52003717	35.47617722
F397	EX	1.25	-4.73548365	15.21702576	-0.64703935	0.010690792	-0.71123797	16.45489311
F397	EX	2.5	-4.73548365	15.21702576	-0.64703935	0.010690792	0.097561285	-2.56639075
F397	EX	3.75	-4.73548365	15.21702576	-0.64703935	0.010690792	0.906360507	-21.5876751
F397	EX	5	-4.73548365	15.21702576	-0.64703935	0.010690792	1.715159774	-40.6089554
F397	EY	0	-0.0384692	-0.06441688	-0.42736527	-0.05147337	-0.87241924	-0.1565159
F397	EY	1.25	-0.0384692	-0.06441688	-0.42736527	-0.05147337	-0.33821264	-0.0759948
F397	EY	2.5	-0.0384692	-0.06441688	-0.42736527	-0.05147337	0.19599396	0.004526301
F397	EY	3.75	-0.0384692	-0.06441688	-0.42736527	-0.05147337	0.730200589	0.085047394
F397	EY	5	-0.0384692	-0.06441688	-0.42736527	-0.05147337	1.264407158	0.165568486
F397	COMB1	0	6.557678699	-72.0951462	-0.40955418	-0.00939926	-0.99050057	-64.0290527
F397	COMB1	1.25	6.557678699	-48.5163994	-0.40955418	-0.00939926	-0.47855777	15.25290489
F397	COMB1	2.5	6.557678699	0.519843996	-0.40955418	-0.00939926	0.03338496	45.65632629
F397	COMB1	3.75	6.557678699	49.55609131	-0.40955418	-0.00939926	0.545327723	13.95329475
F397	COMB1	5	6.557678699	73.13483429	-0.40955418	-0.00939926	1.057270408	-66.628273
F397	COMB2	0	-1.2258395	-32.7924538	-1.21522176	-0.02109164	-2.83648729	-5.56339121
F397	COMB2	1.25	-1.2258395	-16.399332	-1.21522176	-0.02109164	-1.31745994	27.71077347
F397	COMB2	2.5	-1.2258395	16.5050354	-1.21522176	-0.02109164	0.201567203	27.9077549
F397	COMB2	3.75	-1.2258395	49.40940857	-1.21522176	-0.02109164	1.720594406	-13.5518188
F397	COMB2	5	-1.2258395	65.80252838	-1.21522176	-0.02109164	3.239621639	-88.0885773
F397	COMB3	0	2.155433893	-43.7960587	-1.06346691	-0.06662193	-2.38328862	-31.2212772
F397	COMB3	1.25	2.155433893	-27.4029388	-1.06346691	-0.06662193	-1.05395496	15.80739403
F397	COMB3	2.5	2.155433893	5.501430988	-1.06346691	-0.06662193	0.275378644	29.75888443
F397	COMB3	3.75	2.155433893	38.40579987	-1.06346691	-0.06662193	1.604712248	2.053816557
F397	COMB3	5	2.155433893	54.79892349	-1.06346691	-0.06662193	2.934045792	-58.7284355
F398	D	0	3.539989948	-74.8047409	0.210470214	13.04480743	0.78575927	-84.7986069
F398	D	0.75	3.539989948	-62.4644318	0.210470214	13.04480743	0.62790668	-33.0888901
F398	D	1.5	3.539989948	-46.3834991	0.210470214	13.04480743	0.47005403	7.962858677
F398	D	2.25	3.539989948	-30.3025665	0.210470214	13.04480743	0.312201411	36.48633575
F398	D	3	3.539989948	-17.9622574	0.210470214	13.04480743	0.154348806	54.35185242
F398	L	0	0.224924117	-11.5520067	0.040019546	4.438189983	0.009216061	-14.7619896
F398	L	0.75	0.224924117	-10.8488817	0.040019546	4.438189983	-0.02079859	-6.27376747
F398	L	1.5	0.224924117	-8.73950768	0.040019546	4.438189983	-0.05081324	1.159767032
F398	L	2.25	0.224924117	-6.63013363	0.040019546	4.438189983	-0.08082789	6.835490227
F398	L	3	0.224924117	-5.92700863	0.040019546	4.438189983	-0.11084254	11.45652676
F398	EX	0	-1.22825778	1.035454392	0.23894012	-2.82006454	0.454841137	1.808409095
F398	EX	0.75	-1.22825778	1.035454392	0.23894012	-2.82006454	0.275636077	1.031818628
F398	EX	1.5	-1.22825778	1.035454392	0.23894012	-2.82006454	0.096431069	0.255228043
F398	EX	2.25	-1.22825778	1.035454392	0.23894012	-2.82006454	-0.08277397	-0.52136248
F398	EX	3	-1.22825778	1.035454392	0.23894012	-2.82006454	-0.26197901	-1.29795301
F398	EY	0	-38.1260185	10.92546749	-0.30664292	-0.01445606	-0.57185262	32.56391144
F398	EY	0.75	-38.1260185	10.92546749	-0.30664292	-0.01445606	-0.34187049	24.36981201
F398	EY	1.5	-38.1260185	10.92546749	-0.30664292	-0.01445606	-0.11188838	16.17571259
F398	EY	2.25	-38.1260185	10.92546749	-0.30664292	-0.01445606	0.118093729	7.981615067
F398	EY	3	-38.1260185	10.92546749	-0.30664292	-0.01445606	0.348075867	-0.21248378
F398	COMB1	0	4.607866287	-108.248894	0.316595525	22.75487328	0.95765686	-125.37751
F398	COMB1	0.75	4.607866287	-92.3155289	0.316595525	22.75487328	0.720210254	-49.7446976
F398	COMB1	1.5	4.607866287	-69.6434097	0.316595525	22.75487328	0.482763648	11.41105747
F398	COMB1	2.25	4.607866287	-46.9712944	0.316595525	22.75487328	0.245317072	54.72038651
F398	COMB1	3	4.607866287	-31.0379238	0.316595525	22.75487328	0.007870496	83.55266571
F398	COMB2	0	-9.49310207	-77.670639	0.384310395	12.17175674	1.118577361	-81.559227
F398	COMB2	0.75	-9.49310207	-64.4918365	0.384310395	12.17175674	0.830344558	-27.9751472
F398	COMB2	1.5	-9.49310207	-46.9424019	0.384310395	12.17175674	0.542111874	14.08583927
F398	COMB2	2.25	-9.49310207	-29.3929691	0.384310395	12.17175674	0.25387916	42.43843079
F398	COMB2	3	-9.49310207	-16.2141609	0.384310395	12.17175674	-0.03435354	59.26793671
F398	COMB3	0	-36.6313782	-70.3859482	-0.01310905	14.19157791	0.370780021	-58.9268036
F398	COMB3	0.75	-36.6313782	-57.2071419	-0.01310905	14.19157791	0.380611777	-10.8062458
F398	COMB3	1.5	-36.6313782	-39.657711	-0.01310905	14.19157791	0.390443563	25.79122353
F398	COMB3	2.25	-36.6313782	-22.1082783	-0.01310905	14.19157791	0.40027532	48.68029785
F398	COMB3	3	-36.6313782	-8.92946911	-0.01310905	14.19157791	0.410107106	60.04628754
F399	D	0	2.372330904	-84.9052658	0.027575579	0.430712044	0.425517082	-108.517776
F399	D	0.75	2.372330904	-78.1946411	0.027575579	0.430712044	0.404835433	-46.8877525
F399	D	1.5	2.372330904	-64.0027695	0.027575579	0.430712044	0.384153754	6.903837204
F399	D	2.25	2.372330904	-49.8109016	0.027575579	0.430712044	0.363472074	49.11637115
F399	D	3	2.372330904	-43.1002769	0.027575579	0.430712044	0.342790395	83.49047852
F399	L	0	0.853573918	-25.4199066	0.049661115	-0.02957525	0.043253973	-33.0201302
F399	L	0.75	0.853573918	-24.0136585	0.049661115	-0.02957525	0.006008147	-14.3067656
F399	L	1.5	0.853573918	-19.7949085	0.049661115	-0.02957525	-0.03123768	2.297222853
F399	L	2.25	0.853573918	-15.5761604	0.049661115	-0.02957525	-0.0684835	15.38558865
F399	L	3	0.853573918	-14.1699104	0.049661115	-0.02957525	-0.10572933	26.36458015
F399	EX	0	-0.8957088	0.188031092	1.067135572	-3.71529198	1.842261195	0.423305333
F399	EX	0.75	-0.8957088	0.188031092	1.067135572	-3.71529198	1.041909695	0.282282084
F399	EX	1.5	-0.8957088	0.188031092	1.067135572	-3.71529198	0.241558224	0.141258791

F401	COMB2	1.5	-0.09796786	-31.3927784	0.510275841	11.09535599	-0.38716429	9.066626549
F401	COMB2	2.25	-0.09796786	-21.7183456	0.510275841	11.09535599	-0.76987106	28.71012688
F401	COMB2	3	-0.09796786	-16.4145336	0.510275841	11.09535599	-1.15257776	42.7367897
F401	COMB3	0	-4.62654305	-39.9153404	1.029624462	13.24620056	1.468839049	-31.2197895
F401	COMB3	0.75	-4.62654305	-34.6115265	1.029624462	13.24620056	0.696620941	-2.99906182
F401	COMB3	1.5	-4.62654305	-24.9370918	1.029624462	13.24620056	-0.07559717	19.60482979
F401	COMB3	2.25	-4.62654305	-15.2626581	1.029624462	13.24620056	-0.84781522	34.40656662
F401	COMB3	3	-4.62654305	-9.958848	1.029624462	13.24620056	-1.62003326	43.591465
F402	D	0	2.406841993	-85.0536423	-0.0145438	-0.30353269	-0.40341184	-108.733322
F402	D	0.75	2.406841993	-78.3430176	-0.0145438	-0.30353269	-0.39250401	-46.9920197
F402	D	1.5	2.406841993	-64.1511536	-0.0145438	-0.30353269	-0.38159615	6.910857677
F402	D	2.25	2.406841993	-49.9592819	-0.0145438	-0.30353269	-0.37068829	49.23467636
F402	D	3	2.406841993	-43.248661	-0.0145438	-0.30353269	-0.35978043	83.72006989
F402	L	0	1.109330177	-35.4930115	-0.03807833	0.159430444	-0.02358731	-43.6881218
F402	L	0.75	1.109330177	-32.8211365	-0.03807833	0.159430444	0.004971425	-17.7363377
F402	L	1.5	1.109330177	-24.8055153	-0.03807833	0.159430444	0.033530165	4.207636833
F402	L	2.25	1.109330177	-16.7898941	-0.03807833	0.159430444	0.062088907	19.47192764
F402	L	3	1.109330177	-14.1180191	-0.03807833	0.159430444	0.090647645	30.72840691
F402	EX	0	0.677010834	-0.1794735	0.941364884	-3.67628074	1.587678313	-0.4114227
F402	EX	0.75	0.677010834	-0.1794735	0.941364884	-3.67628074	0.881654799	-0.27681759
F402	EX	1.5	0.677010834	-0.1794735	0.941364884	-3.67628074	0.175631329	-0.14221253
F402	EX	2.25	0.677010834	-0.1794735	0.941364884	-3.67628074	-0.53039211	-0.00760744
F402	EX	3	0.677010834	-0.1794735	0.941364884	-3.67628074	-1.23641562	0.12699765
F402	EY	0	-37.5309486	10.55406857	1.195946455	0.024403878	2.244681835	31.43991661
F402	EY	0.75	-37.5309486	10.55406857	1.195946455	0.024403878	1.347722411	23.52436829
F402	EY	1.5	-37.5309486	10.55406857	1.195946455	0.024403878	0.450762808	15.60881996
F402	EY	2.25	-37.5309486	10.55406857	1.195946455	0.024403878	-0.44619676	7.693270683
F402	EY	3	-37.5309486	10.55406857	1.195946455	0.024403878	-1.34315634	-0.22227784
F402	COMB1	0	4.663138866	-158.853195	-0.0783779	-0.10915053	-0.5218339	-200.380981
F402	COMB1	0.75	4.663138866	-146.525436	-0.0783779	-0.10915053	-0.46305051	-84.7685623
F402	COMB1	1.5	4.663138866	-116.670204	-0.0783779	-0.10915053	-0.4042671	15.02524757
F402	COMB1	2.25	4.663138866	-86.8149719	-0.0783779	-0.10915053	-0.34548369	90.23669434
F402	COMB1	3	4.663138866	-74.4872208	-0.0783779	-0.10915053	-0.28670031	149.6295319
F402	COMB2	0	-8.24491978	-97.347847	1.323770165	-4.06575203	1.919309378	-118.453995
F402	COMB2	0.75	-8.24491978	-89.4600525	1.323770165	-4.06575203	0.926482081	-47.8048935
F402	COMB2	1.5	-8.24491978	-72.0336685	1.323770165	-4.06575203	-0.06634524	13.35139465
F402	COMB2	2.25	-8.24491978	-54.6072884	1.323770165	-4.06575203	-1.05917251	60.24557495
F402	COMB2	3	-8.24491978	-46.7194939	1.323770165	-4.06575203	-2.05199981	97.64694977
F402	COMB3	0	-36.3176155	-89.46138	1.525008082	-1.40089309	2.426022291	-95.0494308
F402	COMB3	0.75	-36.3176155	-81.5735855	1.525008082	-1.40089309	1.282266617	-30.315176
F402	COMB3	1.5	-36.3176155	-64.1472092	1.525008082	-1.40089309	0.138510853	24.92627144
F402	COMB3	2.25	-36.3176155	-46.7208252	1.525008082	-1.40089309	-1.00524485	65.90560913
F402	COMB3	3	-36.3176155	-38.8330307	1.525008082	-1.40089309	-2.14900064	97.39213562
F403	D	0	3.919466972	-89.6495819	-0.20254904	-12.8062954	-0.77420801	-100.509583
F403	D	0.75	3.919466972	-75.4389648	-0.20254904	-12.8062954	-0.62229627	-38.1338234
F403	D	1.5	3.919466972	-53.747097	-0.20254904	-12.8062954	-0.47038457	10.77851105
F403	D	2.25	3.919466972	-32.055233	-0.20254904	-12.8062954	-0.31847283	42.48679733
F403	D	3	3.919466972	-17.8446102	-0.20254904	-12.8062954	-0.16656111	60.73165512
F403	L	0	0.642376959	-27.2750912	-0.0359081	-4.3971262	-0.00319772	-31.4389839
F403	L	0.75	0.642376959	-24.6032162	-0.0359081	-4.3971262	0.023733336	-11.6506395
F403	L	1.5	0.642376959	-16.587595	-0.0359081	-4.3971262	0.050664399	4.12989378
F403	L	2.25	0.642376959	-8.57197094	-0.0359081	-4.3971262	0.077595465	13.23074341
F403	L	3	0.642376959	-5.90009689	-0.0359081	-4.3971262	0.10452652	18.32378387
F403	EX	0	1.347314835	-1.03231418	0.552915096	-2.74148297	0.852867007	-1.79665101
F403	EX	0.75	1.347314835	-1.03231418	0.552915096	-2.74148297	0.438180834	-1.02241564
F403	EX	1.5	1.347314835	-1.03231418	0.552915096	-2.74148297	0.02349464	-0.2481802
F403	EX	2.25	1.347314835	-1.03231418	0.552915096	-2.74148297	-0.39119154	0.526055217
F403	EX	3	1.347314835	-1.03231418	0.552915096	-2.74148297	-0.80587775	1.300290704
F403	EY	0	-38.1260071	10.92547321	0.30664131	0.014456743	0.571848929	32.5639267
F403	EY	0.75	-38.1260071	10.92547321	0.30664131	0.014456743	0.341868043	24.36982346
F403	EY	1.5	-38.1260071	10.92547321	0.30664131	0.014456743	0.11188715	16.17572021
F403	EY	2.25	-38.1260071	10.92547321	0.30664131	0.014456743	-0.11809374	7.981617928
F403	EY	3	-38.1260071	10.92547321	0.30664131	0.014456743	-0.34807464	-0.21248399
F403	COMB1	0	5.731163502	-151.21965	-0.30051181	-22.402956	-0.93416601	-170.913879
F403	COMB1	0.75	5.731163502	-129.891907	-0.30051181	-22.402956	-0.7087822	-64.4016113
F403	COMB1	1.5	5.731163502	-91.0366669	-0.30051181	-22.402956	-0.48339844	19.54204178
F403	COMB1	2.25	5.731163502	-52.1814308	-0.30051181	-22.402956	-0.25801465	72.1533432
F403	COMB1	3	5.731163502	-30.8536873	-0.30051181	-22.402956	-0.03263089	102.1960373
F403	COMB2	0	-6.29743242	-100.350639	0.444871604	-17.6645851	0.248924091	-107.040245
F403	COMB2	0.75	-6.29743242	-84.5878448	0.444871604	-17.6645851	-0.08472952	-37.0921745
F403	COMB2	1.5	-6.29743242	-59.2864647	0.444871604	-17.6645851	-0.41838309	17.45683861
F403	COMB2	2.25	-6.29743242	-33.9850845	0.444871604	-17.6645851	-0.75203669	51.83749771
F403	COMB2	3	-6.29743242	-18.2222919	0.444871604	-17.6645851	-1.08569026	70.81909943
F403	COMB3	0	-35.2901154	-91.5771484	0.272154093	-15.6800919	0.055168811	-81.8121719
F403	COMB3	0.75	-35.2901154	-75.8143616	0.272154093	-15.6800919	-0.1489467	-18.4442139
F403	COMB3	1.5	-35.2901154	-50.5129738	0.272154093	-15.6800919	-0.35306218	29.524683
F403	COMB3	2.25	-35.2901154	-25.2115974	0.272154093	-15.6800919	-0.55717766	57.32522583
F403	COMB3	3	-35.2901154	-9.4488039	0.272154093	-15.6800919	-0.76129317	69.72671509
F404	D	0	0.324833393	-35.9640846	-0.03863651	0.001932385	-0.09820563	-26.0634079
F404	D	1.25	0.324833393	-23.3234615	-0.03863651	0.001932385	-0.04990999	13.15602398
F404	D	2.5	0.324833393	3.44840765	-0.03863651	0.001932385	-0.00161435	25.80306244
F404	D	3.75	0.324833393	30.22027779	-0.03863651	0.001932385	0.046681281	4.535004139
F404	D	5	0.324833393	42.86089706	-0.03863651	0.001932385	0.094976917	-43.3054466
F404	L	0	0.067435443	-11.9795208	-0.0046901	0.001622378	-0.01199568	-8.86422157

F404	L	1.25	0.067435443	-8.07326984	-0.0046901	0.001622378	-0.00613305	4.482575417
F404	L	2.5	0.067435443	1.145480156	-0.0046901	0.001622378	-0.00027042	8.897080421
F404	L	3.75	0.067435443	10.36423111	-0.0046901	0.001622378	0.005592208	1.618875146
F404	L	5	0.067435443	14.27048016	-0.0046901	0.001622378	0.011454836	-14.5916224
F404	EX	0	-0.65582305	1.736905336	-0.34268862	-0.00095242	-0.8685298	5.224500656
F404	EX	1.25	-0.65582305	1.736905336	-0.34268862	-0.00095242	-0.44016901	3.053369045
F404	EX	2.5	-0.65582305	1.736905336	-0.34268862	-0.00095242	-0.01180825	0.882237256
F404	EX	3.75	-0.65582305	1.736905336	-0.34268862	-0.00095242	0.416552514	-1.28889453
F404	EX	5	-0.65582305	1.736905336	-0.34268862	-0.00095242	0.844913304	-3.46002626
F404	EY	0	0.038247339	0.004212208	0.29192403	-0.00759472	0.741244078	0.014324301
F404	EY	1.25	0.038247339	0.004212208	0.29192403	-0.00759472	0.376339018	0.009059041
F404	EY	2.5	0.038247339	0.004212208	0.29192403	-0.00759472	0.011433959	0.00379378
F404	EY	3.75	0.038247339	0.004212208	0.29192403	-0.00759472	-0.3534711	-0.00147148
F404	EY	5	0.038247339	0.004212208	0.29192403	-0.00759472	-0.7183761	-0.00673674
F404	COMB1	0	0.497696757	-62.324131	-0.05386797	0.004914667	-0.13703984	-45.4588432
F404	COMB1	1.25	0.497696757	-40.9053879	-0.05386797	0.004914667	-0.06970487	22.95934868
F404	COMB1	2.5	0.497696757	5.970857143	-0.05386797	0.004914667	-0.0023699	45.19900513
F404	COMB1	3.75	0.497696757	52.84710312	-0.05386797	0.004914667	0.064965069	8.032204628
F404	COMB1	5	0.497696757	74.26584625	-0.05386797	0.004914667	0.132300034	-75.3131332
F404	COMB2	0	-0.30441174	-39.7368126	-0.30477235	-0.00083803	-0.772331	-24.7469368
F404	COMB2	1.25	-0.30441174	-25.2336922	-0.30477235	-0.00083803	-0.39136553	18.38892746
F404	COMB2	2.5	-0.30441174	5.780677795	-0.30477235	-0.00083803	-0.0104001	30.81010628
F404	COMB2	3.75	-0.30441174	36.79504776	-0.30477235	-0.00083803	0.370565325	3.937230587
F404	COMB2	5	-0.30441174	51.29816818	-0.30477235	-0.00083803	0.751530826	-53.6503296
F404	COMB3	0	0.195892662	-40.9842873	0.156527609	-0.00573441	0.397824824	-28.4980488
F404	COMB3	1.25	0.195892662	-26.4811668	0.156527609	-0.00573441	0.202165321	16.19715881
F404	COMB3	2.5	0.195892662	4.533202171	0.156527609	-0.00573441	0.006505803	30.17768478
F404	COMB3	3.75	0.195892662	35.54757309	0.156527609	-0.00573441	-0.18915373	4.864152908
F404	COMB3	5	0.195892662	50.05069351	0.156527609	-0.00573441	-0.38481319	-51.1640625
F405	D	0	0.112942107	-43.3587074	-0.08276594	0.002514285	-0.20576915	-44.1511002
F405	D	1.25	0.112942107	-30.7180862	-0.08276594	0.002514285	-0.10231172	4.311610699
F405	D	2.5	0.112942107	-3.94621563	-0.08276594	0.002514285	0.001145722	26.20192909
F405	D	3.75	0.112942107	22.82565308	-0.08276594	0.002514285	0.104603156	14.17714977
F405	D	5	0.112942107	35.46627808	-0.08276594	0.002514285	0.208060607	-24.4200211
F405	L	0	0.115544707	-14.2638855	-0.01782976	0.000678893	-0.04439213	-14.5289459
F405	L	1.25	0.115544707	-10.3576355	-0.01782976	0.000678893	-0.02210492	1.673308492
F405	L	2.5	0.115544707	-1.13888538	-0.01782976	0.000678893	0.000182287	8.94326973
F405	L	3.75	0.115544707	8.079864502	-0.01782976	0.000678893	0.022469493	4.520522118
F405	L	5	0.115544707	11.9861145	-0.01782976	0.000678893	0.044756696	-8.83451748
F405	EX	0	-0.32867676	1.890698433	-0.37548795	-2.2593E-05	-0.93046457	3.767464399
F405	EX	1.25	-0.32867676	1.890698433	-0.37548795	-2.2593E-05	-0.46110457	1.404091477
F405	EX	2.5	-0.32867676	1.890698433	-0.37548795	-2.2593E-05	0.008255392	-0.95928168
F405	EX	3.75	-0.32867676	1.890698433	-0.37548795	-2.2593E-05	0.477615386	-3.32265472
F405	EX	5	-0.32867676	1.890698433	-0.37548795	-2.2593E-05	0.94697535	-5.686028
F405	EY	0	0.015859798	0.011675388	0.785764515	-0.01778404	1.955172062	0.026650613
F405	EY	1.25	0.015859798	0.011675388	0.785764515	-0.01778404	0.972966313	0.012056379
F405	EY	2.5	0.015859798	0.011675388	0.785764515	-0.01778404	-0.00923933	-0.00253786
F405	EY	3.75	0.015859798	0.011675388	0.785764515	-0.01778404	-0.99144506	-0.01713209
F405	EY	5	0.015859798	0.011675388	0.785764515	-0.01778404	-1.97365069	-0.03172632
F405	COMB1	0	0.320402056	-74.8526688	-0.12784676	0.004103371	-0.31795037	-76.2276382
F405	COMB1	1.25	0.320402056	-53.433918	-0.12784676	0.004103371	-0.15814193	7.85122633
F405	COMB1	2.5	0.320402056	-6.55767536	-0.12784676	0.004103371	0.001666526	45.75154877
F405	COMB1	3.75	0.320402056	40.31856918	-0.12784676	0.004103371	0.161474973	24.24541664
F405	COMB1	5	0.320402056	61.73731613	-0.12784676	0.004103371	0.32128343	-43.4392509
F405	COMB2	0	-0.18019883	-48.0502155	-0.23363483	-0.0027715	-0.57719278	-47.0275536
F405	COMB2	1.25	-0.18019883	-33.5560951	-0.23363483	-0.0027715	-0.28514919	6.511315823
F405	COMB2	2.5	-0.18019883	-2.54172468	-0.23363483	-0.0027715	0.006894369	29.33550072
F405	COMB2	3.75	-0.18019883	28.47264481	-0.23363483	-0.0027715	0.298937947	12.86562729
F405	COMB2	5	-0.18019883	42.97576904	-0.23363483	-0.0027715	0.590981483	-34.3189278
F405	COMB3	0	0.0681054	-49.4119377	0.614253402	-0.0158265	1.529793143	-49.7205391
F405	COMB3	1.25	0.0681054	-34.9088173	0.614253402	-0.0158265	0.761976361	5.509231091
F405	COMB3	2.5	0.0681054	-3.89444613	0.614253402	-0.0158265	-0.00584042	30.0243187
F405	COMB3	3.75	0.0681054	27.11992264	0.614253402	-0.0158265	-0.77365726	15.24534702
F405	COMB3	5	0.0681054	41.62304688	0.614253402	-0.0158265	-1.54147398	-30.2483063
F406	D	0	0.106474198	-35.370636	0.077282541	-0.00236365	0.194267526	-24.2540474
F406	D	1.25	0.106474198	-22.7300148	0.077282541	-0.00236365	0.097664356	14.22357273
F406	D	2.5	0.106474198	4.041856289	0.077282541	-0.00236365	0.001061178	26.12880135
F406	D	3.75	0.106474198	30.81372643	0.077282541	-0.00236365	-0.095542	4.118930817
F406	D	5	0.106474198	43.45434952	0.077282541	-0.00236365	-0.19214517	-44.4633293
F406	L	0	0.116999313	-12.08253	0.013224244	0.000267098	0.033157576	-9.07331944
F406	L	1.25	0.116999313	-8.17628002	0.013224244	0.000267098	0.016627269	4.402240753
F406	L	2.5	0.116999313	1.042469621	0.013224244	0.000267098	9.69622E-05	8.945508957
F406	L	3.75	0.116999313	10.26121998	0.013224244	0.000267098	-0.01643335	1.796066523
F406	L	5	0.116999313	14.16746998	0.013224244	0.000267098	-0.03296365	-14.2856674
F406	EX	0	-0.49694777	1.875820398	-0.33121115	0.000103698	-0.83463585	5.639481544
F406	EX	1.25	-0.49694777	1.875820398	-0.33121115	0.000103698	-0.42062193	3.294705868
F406	EX	2.5	-0.49694777	1.875820398	-0.33121115	0.000103698	-0.00660798	0.949930429
F406	EX	3.75	-0.49694777	1.875820398	-0.33121115	0.000103698	0.407405972	-1.39484501
F406	EX	5	-0.49694777	1.875820398	-0.33121115	0.000103698	0.821419954	-3.73962045
F406	EY	0	0.015859893	-0.01167548	-0.7857632	0.017784378	-1.97364748	-0.03172659
F406	EY	1.25	0.015859893	-0.01167548	-0.7857632	0.017784378	-0.99144346	-0.01713225
F406	EY	2.5	0.015859893	-0.01167548	-0.7857632	0.017784378	-0.00923949	-0.0025379
F406	EY	3.75	0.015859893	-0.01167548	-0.7857632	0.017784378	0.972964525	0.012056442
F406	EY	5	0.015859893	-0.01167548	-0.7857632	0.017784378	1.955168366	0.026650786

F408	COMB3	3	-36.4748497	93.51129913	-0.20900171	-14.3064718	0.639287233	-128.297104
F409	D	0	2.328201294	43.11933136	0.239466861	-0.41494191	0.643536448	83.48989105
F409	D	0.75	2.328201294	49.82995224	0.239466861	-0.41494191	0.463936388	49.10150528
F409	D	1.5	2.328201294	64.02182007	0.239466861	-0.41494191	0.284336269	6.874680042
F409	D	2.25	2.328201294	78.21369171	0.239466861	-0.41494191	0.104736187	-46.9311981
F409	D	3	2.328201294	84.92431641	0.239466861	-0.41494191	-0.0748639	-108.575516
F409	L	0	0.840434194	14.36445522	0.001551856	0.033101406	-0.04988237	26.36552429
F409	L	0.75	0.840434194	15.77070427	0.001551856	0.033101406	-0.05104626	15.24062347
F409	L	1.5	0.840434194	19.98945427	0.001551856	0.033101406	-0.05221015	2.006349325
F409	L	2.25	0.840434194	24.20820236	0.001551856	0.033101406	-0.05337404	-14.7435474
F409	L	3	0.840434194	25.61445236	0.001551856	0.033101406	-0.05453794	-33.6028175
F409	EX	0	-0.9285081	0.034237996	0.739989281	3.512198925	0.416233182	-0.14171755
F409	EX	0.75	-0.9285081	0.034237996	0.739989281	3.512198925	-0.13875858	-0.16739605
F409	EX	1.5	-0.9285081	0.034237996	0.739989281	3.512198925	-0.69375038	-0.19307454
F409	EX	2.25	-0.9285081	0.034237996	0.739989281	3.512198925	-1.24874222	-0.21875302
F409	EX	3	-0.9285081	0.034237996	0.739989281	3.512198925	-1.80373394	-0.2444315
F409	EY	0	-37.0371056	10.54660606	-1.17356277	0.008984036	-1.33038867	-0.21208838
F409	EY	0.75	-37.0371056	10.54660606	-1.17356277	0.008984036	-0.45021689	-8.12204075
F409	EY	1.5	-37.0371056	10.54660606	-1.17356277	0.008984036	0.429954946	-16.031992
F409	EY	2.25	-37.0371056	10.54660606	-1.17356277	0.008984036	1.310126781	-23.9419441
F409	EY	3	-37.0371056	10.54660606	-1.17356277	0.008984036	2.190298557	-31.8518944
F409	COMB1	0	4.138536453	74.72632599	0.289843202	-0.44496804	0.692431927	142.3727112
F409	COMB1	0.75	4.138536453	85.02906799	0.289843202	-0.44496804	0.475049645	83.30680084
F409	COMB1	1.5	4.138536453	108.8093185	0.289843202	-0.44496804	0.257667273	11.45977497
F409	COMB1	2.25	4.138536453	132.5895538	0.289843202	-0.44496804	0.04028495	-79.9071121
F409	COMB1	3	4.138536453	142.8923035	0.289843202	-0.44496804	-0.17709738	-184.05513
F409	COMB2	0	-9.91834641	53.15771866	0.648145676	3.212693691	0.671729207	95.75604248
F409	COMB2	0.75	-9.91834641	60.64683914	0.648145676	3.212693691	0.185620174	53.62567902
F409	COMB2	1.5	-9.91834641	76.87721252	0.648145676	3.212693691	-0.30048898	2.60050416
F409	COMB2	2.25	-9.91834641	93.10757446	0.648145676	3.212693691	-0.78659803	-61.6900978
F409	COMB2	3	-9.91834641	100.5967026	0.648145676	3.212693691	-1.2727071	-134.875504
F409	COMB3	0	-36.4720917	60.88482285	-0.74721527	0.690513849	-0.60579437	95.70219421
F409	COMB3	0.75	-36.4720917	68.37394714	-0.74721527	0.690513849	-0.04538305	47.77650452
F409	COMB3	1.5	-36.4720917	84.60431671	-0.74721527	0.690513849	0.515028179	-9.04399681
F409	COMB3	2.25	-36.4720917	100.8346786	-0.74721527	0.690513849	1.075439572	-79.129921
F409	COMB3	3	-36.4720917	108.3238068	-0.74721527	0.690513849	1.635850787	-158.110657
F410	D	0	-6.69868946	17.85228539	0.155218944	12.22663021	0.640411139	38.98799896
F410	D	0.75	-6.69868946	22.69259644	0.155218944	12.22663021	0.523996949	24.01746368
F410	D	1.5	-6.69868946	31.27352905	0.155218944	12.22663021	0.40758276	4.013961792
F410	D	2.25	-6.69868946	39.85446548	0.155218944	12.22663021	0.2911686	-22.8928165
F410	D	3	-6.69868946	44.69477463	0.155218944	12.22663021	0.174754426	-54.8325615
F410	L	0	-1.33125734	6.11173296	0.079675376	4.421583176	0.058091365	11.3205452
F410	L	0.75	-1.33125734	6.744544983	0.079675376	4.421583176	-0.00166515	6.57854414
F410	L	1.5	-1.33125734	8.642981529	0.079675376	4.421583176	-0.06142167	0.88732487
F410	L	2.25	-1.33125734	10.54141808	0.079675376	4.421583176	-0.12117819	-6.38592434
F410	L	3	-1.33125734	11.17422962	0.079675376	4.421583176	-0.1809347	-14.6083918
F410	EX	0	-6.46853733	1.041857839	0.406323314	2.705209017	-0.09025224	1.611579895
F410	EX	0.75	-6.46853733	1.041857839	0.406323314	2.705209017	-0.39499462	0.830186665
F410	EX	1.5	-6.46853733	1.041857839	0.406323314	2.705209017	-0.69973701	0.048793573
F410	EX	2.25	-6.46853733	1.041857839	0.406323314	2.705209017	-1.00447941	-0.73259962
F410	EX	3	-6.46853733	1.041857839	0.406323314	2.705209017	-1.30922174	-1.51399267
F410	EY	0	-0.16043232	9.616192818	-0.92035139	0.004489934	-0.98395389	-0.42245486
F410	EY	0.75	-0.16043232	9.616192818	-0.92035139	0.004489934	-0.29369059	-7.63459682
F410	EY	1.5	-0.16043232	9.616192818	-0.92035139	0.004489934	0.396572709	-14.8467379
F410	EY	2.25	-0.16043232	9.616192818	-0.92035139	0.004489934	1.08683598	-22.0588799
F410	EY	3	-0.16043232	9.616192818	-0.92035139	0.004489934	1.777099371	-29.2710209
F410	COMB1	0	-10.1684389	31.20151329	0.313743353	21.74649048	0.861439526	64.89847565
F410	COMB1	0.75	-10.1684389	38.02238846	0.313743353	21.74649048	0.626132131	39.34662628
F410	COMB1	1.5	-10.1684389	51.35700607	0.313743353	21.74649048	0.390824646	6.236474037
F410	COMB1	2.25	-10.1684389	64.6916275	0.313743353	21.74649048	0.155517206	-37.688858
F410	COMB1	3	-10.1684389	71.51249695	0.313743353	21.74649048	-0.07979021	-89.1725006
F410	COMB2	0	-14.1984425	24.77751732	0.318711579	17.03206635	0.28737393	46.0382843
F410	COMB2	0.75	-14.1984425	30.05918121	0.318711579	17.03206635	0.048340317	25.74492455
F410	COMB2	1.5	-14.1984425	39.66716766	0.318711579	17.03206635	-0.19069333	-0.13205375
F410	COMB2	2.25	-14.1984425	49.27515793	0.318711579	17.03206635	-0.42972696	-33.7558098
F410	COMB2	3	-14.1984425	54.5568161	0.318711579	17.03206635	-0.66876054	-72.9631882
F410	COMB3	0	-9.65901279	31.0952816	-0.65029949	15.08761597	-0.37085056	44.56744003
F410	COMB3	0.75	-9.65901279	36.3769455	-0.65029949	15.08761597	0.116873868	19.53576088
F410	COMB3	1.5	-9.65901279	45.98493195	-0.65029949	15.08761597	0.604598284	-11.0795374
F410	COMB3	2.25	-9.65901279	55.59292221	-0.65029949	15.08761597	1.092322707	-49.4416161
F410	COMB3	3	-9.65901279	60.87458038	-0.65029949	15.08761597	1.580047131	-93.3873138
F411	D	0	-6.65558004	17.80534554	-0.14512295	-12.1388073	-0.63209772	38.91319656
F411	D	0.75	-6.65558004	22.64565659	-0.14512295	-12.1388073	-0.52325553	23.97786522
F411	D	1.5	-6.65558004	31.22659111	-0.14512295	-12.1388073	-0.41441336	4.009568691
F411	D	2.25	-6.65558004	39.80752563	-0.14512295	-12.1388073	-0.30557117	-22.8620052
F411	D	3	-6.65558004	44.64783478	-0.14512295	-12.1388073	-0.196729	-54.7665443
F411	L	0	-1.24314713	6.164748192	-0.07462212	-4.53733444	-0.0566305	11.63160992
F411	L	0.75	-1.24314713	6.867872715	-0.07462212	-4.53733444	-0.00066392	6.832269192
F411	L	1.5	-1.24314713	8.977247238	-0.07462212	-4.53733444	0.055302661	0.978241801
F411	L	2.25	-1.24314713	11.08662128	-0.07462212	-4.53733444	0.111269236	-6.6335969
F411	L	3	-1.24314713	11.78974628	-0.07462212	-4.53733444	0.167235807	-15.3001223
F411	EX	0	6.596677303	-1.03745782	0.731345594	2.680001974	0.4735654	-1.60025454
F411	EX	0.75	6.596677303	-1.03745782	0.731345594	2.680001974	-0.07494362	-0.82216138
F411	EX	1.5	6.596677303	-1.03745782	0.731345594	2.680001974	-0.62345266	-0.04406822

F411	EX	2.25	6.596677303	-1.03745782	0.731345594	2.680001974	-1.17196167	0.734024942
F411	EX	3	6.596677303	-1.03745782	0.731345594	2.680001974	-1.72047067	1.512118101
F411	EY	0	-0.16058692	9.616175652	0.920351028	-0.00448956	0.983951867	-0.42245415
F411	EY	0.75	-0.16058692	9.616175652	0.920351028	-0.00448956	0.293688744	-7.634583
F411	EY	1.5	-0.16058692	9.616175652	0.920351028	-0.00448956	-0.39657432	-14.8467121
F411	EY	2.25	-0.16058692	9.616175652	0.920351028	-0.00448956	-1.08683741	-22.0588417
F411	EY	3	-0.16058692	9.616175652	0.920351028	-0.00448956	-1.77710044	-29.2709694
F411	COMB1	0	-9.97573185	31.23001099	-0.29354295	-21.8263035	-0.8491261	65.30641174
F411	COMB1	0.75	-9.97573185	38.16338348	-0.29354295	-21.8263035	-0.62896889	39.7050705
F411	COMB1	1.5	-9.97573185	51.83550644	-0.29354295	-21.8263035	-0.40881178	6.376669407
F411	COMB1	2.25	-9.97573185	65.50762177	-0.29354295	-21.8263035	-0.18865463	-38.0481606
F411	COMB1	3	-9.97573185	72.44099426	-0.29354295	-21.8263035	0.031502493	-90.2000504
F411	COMB2	0	-0.60297436	22.59283447	0.870968223	-11.4026194	0.118543811	42.73347855
F411	COMB2	0.75	-0.60297436	27.8966465	0.870968223	-11.4026194	-0.53468215	24.07309151
F411	COMB2	1.5	-0.60297436	37.57107925	0.870968223	-11.4026194	-1.18790805	-0.20413159
F411	COMB2	2.25	-0.60297436	47.24551392	0.870968223	-11.4026194	-1.84113407	-32.2835083
F411	COMB2	3	-0.60297436	52.54932022	0.870968223	-11.4026194	-2.49435997	-69.9797211
F411	COMB3	0	-5.47061348	30.40769386	1.020857453	-13.3355207	0.500781298	43.57515717
F411	COMB3	0.75	-5.47061348	35.71150589	1.020857453	-13.3355207	-0.26486149	19.05363083
F411	COMB3	1.5	-5.47061348	45.38593674	1.020857453	-13.3355207	-1.03050435	-11.0847359
F411	COMB3	2.25	-5.47061348	55.0603714	1.020857453	-13.3355207	-1.79614711	-49.0252533
F411	COMB3	3	-5.47061348	60.36418152	1.020857453	-13.3355207	-2.56178975	-92.5826111
F412	D	0	2.36354661	43.27288437	-0.22906637	0.292101711	-0.6353817	83.71829224
F412	D	0.75	2.36354661	49.98350525	-0.22906637	0.292101711	-0.46358198	49.21473312
F412	D	1.5	2.36354661	64.17536926	-0.22906637	0.292101711	-0.29178229	6.872747898
F412	D	2.25	2.36354661	78.36724091	-0.22906637	0.292101711	-0.11998256	-47.0482941
F412	D	3	2.36354661	85.0778656	-0.22906637	0.292101711	0.051817153	-108.807762
F412	L	0	1.096186161	14.33741093	0.008058968	-0.15946801	0.057666358	30.72969627
F412	L	0.75	1.096186161	17.00928497	0.008058968	-0.15946801	0.05162213	19.30867386
F412	L	1.5	1.096186161	25.02490807	0.008058968	-0.15946801	0.045577906	3.879840851
F412	L	2.25	1.096186161	33.04053116	0.008058968	-0.15946801	0.039533682	-18.2286777
F412	L	3	1.096186161	35.71240616	0.008058968	-0.15946801	0.033489458	-44.345005
F412	EX	0	0.712383449	-0.04015753	0.617931843	3.519422531	0.315775216	0.128172353
F412	EX	0.75	0.712383449	-0.04015753	0.617931843	3.519422531	-0.14767358	0.158290491
F412	EX	1.5	0.712383449	-0.04015753	0.617931843	3.519422531	-0.61112231	0.188408628
F412	EX	2.25	0.712383449	-0.04015753	0.617931843	3.519422531	-1.07457113	0.218526766
F412	EX	3	0.712383449	-0.04015753	0.617931843	3.519422531	-1.5380199	0.248644903
F412	EY	0	-37.0371056	10.54660511	1.17355907	-0.00898388	1.330384851	-0.21208827
F412	EY	0.75	-37.0371056	10.54660511	1.17355907	-0.00898388	0.450215876	-8.12203979
F412	EY	1.5	-37.0371056	10.54660511	1.17355907	-0.00898388	-0.42995316	-16.031992
F412	EY	2.25	-37.0371056	10.54660511	1.17355907	-0.00898388	-1.31012213	-23.9419441
F412	EY	3	-37.0371056	10.54660511	1.17355907	-0.00898388	-2.1902914	-31.8518944
F412	COMB1	0	4.590153694	74.8673172	-0.2619853	0.095373251	-0.67019188	149.6294556
F412	COMB1	0.75	4.590153694	87.19506073	-0.2619853	0.095373251	-0.47370297	89.95156097
F412	COMB1	1.5	4.590153694	117.0503006	-0.2619853	0.095373251	-0.27721411	14.45504284
F412	COMB1	2.25	4.590153694	146.9055328	-0.2619853	0.095373251	-0.08072519	-85.6238327
F412	COMB1	3	4.590153694	159.2332764	-0.2619853	0.095373251	0.115763716	-201.521332
F412	COMB2	0	-8.10234928	53.23342896	0.771249473	3.896246672	0.096912697	97.64990997
F412	COMB2	0.75	-8.10234928	61.12122345	0.771249473	3.896246672	-0.48152426	55.36309052
F412	COMB2	1.5	-8.10234928	78.54760742	0.771249473	3.896246672	-1.0599612	3.583461046
F412	COMB2	2.25	-8.10234928	95.97398376	0.771249473	3.896246672	-1.63839817	-62.4582787
F412	COMB2	3	-8.10234928	103.8617783	0.771249473	3.896246672	-2.21683526	-137.992828
F412	COMB3	0	-35.8375397	61.01409912	1.188904405	1.355659366	0.847387433	97.40174103
F412	COMB3	0.75	-35.8375397	68.90189362	1.188904405	1.355659366	-0.04429061	49.27942276
F412	COMB3	1.5	-35.8375397	86.32826996	1.188904405	1.355659366	-0.9359687	-8.33570671
F412	COMB3	2.25	-35.8375397	103.7546539	1.188904405	1.355659366	-1.82764673	-80.212944
F412	COMB3	3	-35.8375397	111.6424484	1.188904405	1.355659366	-2.71932507	-161.582993
F413	D	0	3.885479927	17.9131813	0.118447721	12.7878933	-0.25304049	60.73106766
F413	D	0.75	3.885479927	32.12379837	0.118447721	12.7878933	-0.34187624	42.43478394
F413	D	1.5	3.885479927	53.8156662	0.118447721	12.7878933	-0.43071201	10.67506981
F413	D	2.25	3.885479927	75.50753784	0.118447721	12.7878933	-0.51954776	-38.2886925
F413	D	3	3.885479927	89.71815491	0.118447721	12.7878933	-0.60838354	-100.715881
F413	L	0	0.642296672	6.061943054	0.034953922	4.392638683	0.104142614	18.32275963
F413	L	0.75	0.642296672	8.733817101	0.034953922	4.392638683	0.07792718	13.10833549
F413	L	1.5	0.642296672	16.74943924	0.034953922	4.392638683	0.051711753	3.886100769
F413	L	2.25	0.642296672	24.76506233	0.034953922	4.392638683	0.025496321	-12.0158167
F413	L	3	0.642296672	27.43693733	0.034953922	4.392638683	-0.00071911	-31.9255447
F413	EX	0	1.64315331	0.704190195	0.379400343	2.48495698	-0.05745564	1.299219608
F413	EX	0.75	1.64315331	0.704190195	0.379400343	2.48495698	-0.34200579	0.771077096
F413	EX	1.5	1.64315331	0.704190195	0.379400343	2.48495698	-0.62655598	0.242934629
F413	EX	2.25	1.64315331	0.704190195	0.379400343	2.48495698	-0.91110617	-0.28520787
F413	EX	3	1.64315331	0.704190195	0.379400343	2.48495698	-1.1956563	-0.81335032
F413	EY	0	-37.8340836	10.92126083	0.344888598	0.000132129	0.393166125	-0.20488916
F413	EY	0.75	-37.8340836	10.92126083	0.344888598	0.000132129	0.134499758	-8.39583111
F413	EY	1.5	-37.8340836	10.92126083	0.344888598	0.000132129	-0.12416662	-16.5867748
F413	EY	2.25	-37.8340836	10.92126083	0.344888598	0.000132129	-0.38283297	-24.7777176
F413	EY	3	-37.8340836	10.92126083	0.344888598	0.000132129	-0.64149934	-32.9686623
F413	COMB1	0	5.690250874	31.19492531	0.198063537	22.37369347	-0.13702041	102.1936951
F413	COMB1	0.75	5.690250874	52.52266693	0.198063537	22.37369347	-0.285568	71.89507294
F413	COMB1	1.5	5.690250874	91.37789917	0.198063537	22.37369347	-0.43411559	19.02784538
F413	COMB1	2.25	5.690250874	130.233139	0.198063537	22.37369347	-0.58266324	-65.1717377
F413	COMB1	3	5.690250874	151.5608826	0.198063537	22.37369347	-0.73121077	-171.939926
F413	COMB2	0	-5.93499565	24.88738632	0.636699855	17.38294029	-0.16850685	70.81944275
F413	COMB2	0.75	-5.93499565	40.650177	0.636699855	17.38294029	-0.64603156	46.83902359

F413	COMB2	1.5	-5.93499565	65.95155334	0.636699855	17.38294029	-1.12355638	7.459548473
F413	COMB2	2.25	-5.93499565	91.25293732	0.636699855	17.38294029	-1.60108113	-52.0882797
F413	COMB2	3	-5.93499565	107.0157318	0.636699855	17.38294029	-2.07860565	-127.035164
F413	COMB3	0	-34.9261169	32.40749359	0.61702472	15.59386921	0.161838308	69.7334137
F413	COMB3	0.75	-34.9261169	48.17028427	0.61702472	15.59386921	-0.30093008	40.11291122
F413	COMB3	1.5	-34.9261169	73.47166443	0.61702472	15.59386921	-0.76369852	-4.90664387
F413	COMB3	2.25	-34.9261169	98.7730484	0.61702472	15.59386921	-1.22646689	-70.0945511
F413	COMB3	3	-34.9261169	114.5358353	0.61702472	15.59386921	-1.68923521	-150.681519
F414	D	0	3.100535393	-44.1244278	-0.51045293	-0.00493628	-1.34892762	-41.1771088
F414	D	1.25	3.100535393	-29.6838055	-0.51045293	-0.00493628	-0.71086144	7.117752075
F414	D	2.5	3.100535393	-1.11193514	-0.51045293	-0.00493628	-0.07279523	26.59022141
F414	D	3.75	3.100535393	27.45993423	-0.51045293	-0.00493628	0.56527096	9.897589684
F414	D	5	3.100535393	41.90055847	-0.51045293	-0.00493628	1.203337073	-35.6174316
F414	L	0	1.848695397	-12.7202921	0.050841916	0.002571148	0.129110187	-10.9802618
F414	L	1.25	1.848695397	-8.81404114	0.050841916	0.002571148	0.065557785	3.292499542
F414	L	2.5	1.848695397	0.404708952	0.050841916	0.002571148	0.002005389	8.632967949
F414	L	3.75	1.848695397	9.623458862	0.050841916	0.002571148	-0.06154701	2.28072691
F414	L	5	1.848695397	13.52970982	0.050841916	0.002571148	-0.12509941	-13.0038061
F414	EX	0	-17.1500702	14.57927418	-0.05369634	0.003904209	-0.14430663	38.81419373
F414	EX	1.25	-17.1500702	14.57927418	-0.05369634	0.003904209	-0.0771862	20.59010315
F414	EX	2.5	-17.1500702	14.57927418	-0.05369634	0.003904209	-0.01006577	2.366010427
F414	EX	3.75	-17.1500702	14.57927418	-0.05369634	0.003904209	0.057054657	-15.8580828
F414	EX	5	-17.1500702	14.57927418	-0.05369634	0.003904209	0.124175087	-34.0821762
F414	EY	0	-0.00310934	0.026873851	0.429903865	0.049874753	1.254510641	0.072616607
F414	EY	1.25	-0.00310934	0.026873851	0.429903865	0.049874753	0.717130661	0.039024293
F414	EY	2.5	-0.00310934	0.026873851	0.429903865	0.049874753	0.179750815	0.005431977
F414	EY	3.75	-0.00310934	0.026873851	0.429903865	0.049874753	-0.35762906	-0.02816034
F414	EY	5	-0.00310934	0.026873851	0.429903865	0.049874753	-0.89500892	-0.06175265
F414	COMB1	0	6.678555012	-73.3017807	-0.53119642	-0.00180969	-1.41213691	-66.9809494
F414	COMB1	1.25	6.678555012	-49.7230339	-0.53119642	-0.00180969	-0.74814123	13.80930138
F414	COMB1	2.5	6.678555012	-0.68678784	-0.53119642	-0.00180969	-0.08414565	45.72101212
F414	COMB1	3.75	6.678555012	48.34945679	-0.53119642	-0.00180969	0.579849899	15.52627087
F414	COMB1	5	6.678555012	71.9282074	-0.53119642	-0.00180969	1.243845463	-63.5470085
F414	COMB2	0	-13.9134016	-35.2395287	-0.44011635	0.015378225	-1.1298908	-6.49918032
F414	COMB2	1.25	-13.9134016	-18.846405	-0.44011635	0.015378225	-0.57974535	29.83382607
F414	COMB2	2.5	-13.9134016	14.05796528	-0.44011635	0.015378225	-0.02959985	33.0896492
F414	COMB2	3.75	-13.9134016	46.96233368	-0.44011635	0.015378225	0.520545602	-5.31108809
F414	COMB2	5	-13.9134016	63.35546112	-0.44011635	0.015378225	1.070690989	-76.7890091
F414	COMB3	0	-1.56763589	-45.7168541	-0.08547564	0.049225137	-0.10392475	-34.3920288
F414	COMB3	1.25	-1.56763589	-29.3237305	-0.08547564	0.049225137	0.002919774	15.03763485
F414	COMB3	2.5	-1.56763589	3.580640316	-0.08547564	0.049225137	0.109764352	31.39011383
F414	COMB3	3.75	-1.56763589	36.48500824	-0.08547564	0.049225137	0.216608867	6.086033821
F414	COMB3	5	-1.56763589	52.87813568	-0.08547564	0.049225137	0.323453397	-52.2952271
F415	D	0	9.22689724	-47.8728981	-0.60110116	0.000423496	-1.43928039	-48.9741898
F415	D	1.25	9.22689724	-33.4322777	-0.60110116	0.000423496	-0.68790394	4.006259441
F415	D	2.5	9.22689724	-4.86040735	-0.60110116	0.000423496	0.063472509	28.16431808
F415	D	3.75	9.22689724	23.71146202	-0.60110116	0.000423496	0.814848959	16.15727806
F415	D	5	9.22689724	38.15208435	-0.60110116	0.000423496	1.56622541	-24.6721554
F415	L	0	3.447380066	-13.4229326	0.023933368	0.007506223	0.05578389	-12.4728107
F415	L	1.25	3.447380066	-9.51668167	0.023933368	0.007506223	0.025867181	2.678250551
F415	L	2.5	3.447380066	-0.29793218	0.023933368	0.007506223	-0.00404953	8.89702034
F415	L	3.75	3.447380066	8.920818329	0.023933368	0.007506223	-0.03396624	3.423081398
F415	L	5	3.447380066	12.82706833	0.023933368	0.007506223	-0.06388295	-10.9831505
F415	EX	0	-9.5112133	15.6657114	-0.14850716	0.031828284	-0.35280886	36.15851212
F415	EX	1.25	-9.5112133	15.6657114	-0.14850716	0.031828284	-0.16717489	16.57636833
F415	EX	2.5	-9.5112133	15.6657114	-0.14850716	0.031828284	0.018459069	-3.00577068
F415	EX	3.75	-9.5112133	15.6657114	-0.14850716	0.031828284	0.204093039	-22.5879097
F415	EX	5	-9.5112133	15.6657114	-0.14850716	0.031828284	0.389726996	-42.1700516
F415	EY	0	-0.01012137	0.027873132	1.483850598	0.101776727	3.669290543	0.064301416
F415	EY	1.25	-0.01012137	0.027873132	1.483850598	0.101776727	1.814477205	0.029460002
F415	EY	2.5	-0.01012137	0.027873132	1.483850598	0.101776727	-0.04033598	-0.00538141
F415	EY	3.75	-0.01012137	0.027873132	1.483850598	0.101776727	-1.89514935	-0.04022283
F415	EY	5	-0.01012137	0.027873132	1.483850598	0.101776727	-3.74996233	-0.07506424
F415	COMB1	0	16.58808517	-78.9241714	-0.68302804	0.012518152	-1.63788223	-78.7255249
F415	COMB1	1.25	16.58808517	-55.3454247	-0.68302804	0.012518152	-0.78409725	9.092712402
F415	COMB1	2.5	16.58808517	-6.30918026	-0.68302804	0.012518152	0.069687769	48.03241348
F415	COMB1	3.75	16.58808517	42.72706223	-0.68302804	0.012518152	0.923472762	24.86566353
F415	COMB1	5	16.58808517	66.30580902	-0.68302804	0.012518152	1.7772578	-47.1796265
F415	COMB2	0	0.926873326	-38.2719765	-0.30990922	0.067811072	-0.70300311	-17.9075222
F415	COMB2	1.25	0.926873326	-21.8788548	-0.30990922	0.067811072	-0.31561667	22.21604347
F415	COMB2	2.5	0.926873326	11.0255146	-0.30990922	0.067811072	0.071769841	29.26242638
F415	COMB2	3.75	0.926873326	43.92988586	-0.30990922	0.067811072	0.459156305	-5.34774399
F415	COMB2	5	0.926873326	60.32300568	-0.30990922	0.067811072	0.846542835	-73.0351028
F415	COMB3	0	7.767507553	-49.5307999	0.887646139	0.119700603	2.247947931	-43.8943863
F415	COMB3	1.25	7.767507553	-33.1376801	0.887646139	0.119700603	1.138389945	10.30271053
F415	COMB3	2.5	7.767507553	-0.23331045	0.887646139	0.119700603	0.028832367	31.4226265
F415	COMB3	3.75	7.767507553	32.67105865	0.887646139	0.119700603	-1.08072543	10.88598728
F415	COMB3	5	7.767507553	49.06418228	0.887646139	0.119700603	-2.19028282	-42.7278404
F416	D	0	9.082591057	-37.7869568	0.595266759	0.000363151	1.551118255	-23.8259602
F416	D	1.25	9.082591057	-23.3463364	0.595266759	0.000363151	0.807034731	16.54706192
F416	D	2.5	9.082591057	5.225535393	0.595266759	0.000363151	0.062951259	28.09769249
F416	D	3.75	9.082591057	33.79740524	0.595266759	0.000363151	-0.68113226	3.483223438
F416	D	5	9.082591057	48.23802948	0.595266759	0.000363151	-1.42521572	-49.9536362
F416	L	0	3.541858673	-12.9138784	-0.02869513	-0.00597598	-0.07626045	-11.1795435

F416	L	1.25	3.541858673	-9.00762749	-0.02869513	-0.00597598	-0.04039155	3.335200787
F416	L	2.5	3.541858673	0.211122155	-0.02869513	-0.00597598	-0.00452264	8.917653084
F416	L	3.75	3.541858673	9.429872513	-0.02869513	-0.00597598	0.031346265	2.807395458
F416	L	5	3.541858673	13.33612251	-0.02869513	-0.00597598	0.067215174	-12.2351542
F416	EX	0	-12.2763262	15.58121777	-0.12610354	0.030977037	-0.32633367	41.88560867
F416	EX	1.25	-12.2763262	15.58121777	-0.12610354	0.030977037	-0.16870424	22.40908432
F416	EX	2.5	-12.2763262	15.58121777	-0.12610354	0.030977037	-0.01107482	2.932560921
F416	EX	3.75	-12.2763262	15.58121777	-0.12610354	0.030977037	0.146554604	-16.5439625
F416	EX	5	-12.2763262	15.58121777	-0.12610354	0.030977037	0.304184049	-36.0204849
F416	EY	0	-0.01011927	-0.02787288	-1.48384738	-0.10177901	-3.74995327	-0.07506357
F416	EY	1.25	-0.01011927	-0.02787288	-1.48384738	-0.10177901	-1.8951441	-0.04022247
F416	EY	2.5	-0.01011927	-0.02787288	-1.48384738	-0.10177901	-0.04033472	-0.00538137
F416	EY	3.75	-0.01011927	-0.02787288	-1.48384738	-0.10177901	1.814474583	0.029459728
F416	EY	5	-0.01011927	-0.02787288	-1.48384738	-0.10177901	3.669283867	0.064300835
F416	COMB1	0	16.56608391	-66.0065536	0.668407917	-0.00912579	1.739325166	-46.4784241
F416	COMB1	1.25	16.56608391	-42.4278069	0.668407917	-0.00912579	0.90381521	25.19279671
F416	COMB1	2.5	16.56608391	6.608438015	0.668407917	-0.00912579	0.068305284	47.98547745
F416	COMB1	3.75	16.56608391	55.64468002	0.668407917	-0.00912579	-0.76720464	8.671700478
F416	COMB1	5	16.56608391	79.22342682	0.668407917	-0.00912579	-1.60271454	-79.520607
F416	COMB2	0	-2.05677891	-27.6263962	0.018062044	-0.00150028	0.085661449	14.78914547
F416	COMB2	1.25	-2.05677891	-11.2332745	0.018062044	-0.00150028	0.06308382	41.60573578
F416	COMB2	2.5	-2.05677891	21.6710968	0.018062044	-0.00150028	0.040506322	35.34514236
F416	COMB2	3.75	-2.05677891	54.57546616	0.018062044	-0.00150028	0.017928747	-12.5720072
F416	COMB2	5	-2.05677891	70.96858978	0.018062044	-0.00150028	-0.00464881	-93.5663376
F416	COMB3	0	6.774737835	-38.8653603	-0.98177123	-0.09861131	-2.43559408	-15.423665
F416	COMB3	1.25	6.774737835	-22.4722385	-0.98177123	-0.09861131	-1.2083801	25.44163132
F416	COMB3	2.5	6.774737835	10.43213272	-0.98177123	-0.09861131	0.018834172	33.22974396
F416	COMB3	3.75	6.774737835	43.33650208	-0.98177123	-0.09861131	1.246048212	-0.6387012
F416	COMB3	5	6.774737835	59.7296257	-0.98177123	-0.09861131	2.47326231	-67.5843277
F417	D	0	2.962187767	-42.2450905	0.50602299	0.005099439	1.192937374	-36.5496178
F417	D	1.25	2.962187767	-27.8044682	0.50602299	0.005099439	0.560408711	9.396072388
F417	D	2.5	2.962187767	0.767402291	0.50602299	0.005099439	-0.07212001	26.51936913
F417	D	3.75	2.962187767	29.33927345	0.50602299	0.005099439	-0.70464879	7.477566719
F417	D	5	2.962187767	43.77989578	0.50602299	0.005099439	-1.33717752	-40.3866272
F417	L	0	1.901400566	-13.4364014	-0.05567515	-0.00231365	-0.1366514	-12.747282
F417	L	1.25	1.901400566	-9.53015232	-0.05567515	-0.00231365	-0.06705746	2.420616627
F417	L	2.5	1.901400566	-0.31140143	-0.05567515	-0.00231365	0.002536479	8.656223297
F417	L	3.75	1.901400566	8.907348633	-0.05567515	-0.00231365	0.072130419	3.199120283
F417	L	5	1.901400566	12.81359863	-0.05567515	-0.00231365	0.141724363	-11.1902742
F417	EX	0	-4.7522788	14.69004631	-0.04483145	0.003906663	-0.0967791	34.26732635
F417	EX	1.25	-4.7522788	14.69004631	-0.04483145	0.003906663	-0.04073979	15.90476894
F417	EX	2.5	-4.7522788	14.69004631	-0.04483145	0.003906663	0.01529952	-2.4577899
F417	EX	3.75	-4.7522788	14.69004631	-0.04483145	0.003906663	0.071338832	-20.8203487
F417	EX	5	-4.7522788	14.69004631	-0.04483145	0.003906663	0.127378136	-39.1829071
F417	EY	0	-0.00310853	-0.02687364	-0.42990175	-0.04987542	-0.89500415	-0.06175219
F417	EY	1.25	-0.00310853	-0.02687364	-0.42990175	-0.04987542	-0.35762697	-0.02816013
F417	EY	2.5	-0.00310853	-0.02687364	-0.42990175	-0.04987542	0.179750234	0.005431922
F417	EY	3.75	-0.00310853	-0.02687364	-0.42990175	-0.04987542	0.717127442	0.039023977
F417	EY	5	-0.00310853	-0.02687364	-0.42990175	-0.04987542	1.254504561	0.072616033
F417	COMB1	0	6.596866131	-72.1923523	0.518147349	0.002417481	1.212882638	-64.255188
F417	COMB1	1.25	6.596866131	-48.6136055	0.518147349	0.002417481	0.565198541	15.14827347
F417	COMB1	2.5	6.596866131	0.422640443	0.518147349	0.002417481	-0.08248565	45.6731987
F417	COMB1	3.75	6.596866131	49.45888519	0.518147349	0.002417481	-0.73016989	14.0916729
F417	COMB1	5	6.596866131	73.0376358	0.518147349	0.002417481	-1.37785399	-66.3683929
F417	COMB2	0	-1.21034968	-33.3940773	0.331966847	-0.00704175	0.827446401	-6.94525862
F417	COMB2	1.25	-1.21034968	-17.0009556	0.331966847	-0.00704175	0.412487894	27.08093643
F417	COMB2	2.5	-1.21034968	15.90341377	0.331966847	-0.00704175	-0.0024707	28.02994537
F417	COMB2	3.75	-1.21034968	48.80778503	0.331966847	-0.00704175	-0.4174293	-12.6776009
F417	COMB2	5	-1.21034968	65.20091248	0.331966847	-0.00704175	-0.83238792	-86.4623337
F417	COMB3	0	2.20900631	-43.9906616	0.048267715	-0.04651298	0.239299327	-31.6631222
F417	COMB3	1.25	2.20900631	-27.5975418	0.048267715	-0.04651298	0.178964734	15.6088047
F417	COMB3	2.5	2.20900631	5.306828022	0.048267715	-0.04651298	0.118630067	29.80354691
F417	COMB3	3.75	2.20900631	38.2111969	0.048267715	-0.04651298	0.058295414	2.341733217
F417	COMB3	5	2.20900631	54.60432434	0.048267715	-0.04651298	-0.0020393	-58.1972656
F418	D	0	2.951060295	-74.7151489	0.743952155	13.56752491	1.563321352	-84.5762482
F418	D	0.75	2.951060295	-62.3748322	0.743952155	13.56752491	1.005356789	-32.9336853
F418	D	1.5	2.951060295	-46.2938843	0.743952155	13.56752491	0.447392374	8.050893784
F418	D	2.25	2.951060295	-30.2129383	0.743952155	13.56752491	-0.11057205	36.50717926
F418	D	3	2.951060295	-17.8726196	0.743952155	13.56752491	-0.66853648	54.30548096
F418	L	0	0.255988657	-11.5941114	-0.08244129	4.423564434	-0.21143462	-14.8986959
F418	L	0.75	0.255988657	-10.8909855	-0.08244129	4.423564434	-0.14960361	-6.37889051
F418	L	1.5	0.255988657	-8.78160858	-0.08244129	4.423564434	-0.08777261	1.086227417
F418	L	2.25	0.255988657	-6.67223263	-0.08244129	4.423564434	-0.0259416	6.793530464
F418	L	3	0.255988657	-5.96910715	-0.08244129	4.423564434	0.035889402	11.44614506
F418	EX	0	-1.42364538	1.034768105	-0.89713985	-2.4678061	-1.86804628	1.797892928
F418	EX	0.75	-1.42364538	1.034768105	-0.89713985	-2.4678061	-1.19519103	1.021816492
F418	EX	1.5	-1.42364538	1.034768105	-0.89713985	-2.4678061	-0.52233577	0.245739967
F418	EX	2.25	-1.42364538	1.034768105	-0.89713985	-2.4678061	0.150519475	-0.53033656
F418	EX	3	-1.42364538	1.034768105	-0.89713985	-2.4678061	0.823374748	-1.30641294
F418	EY	0	-30.1260414	10.99606991	-0.30841327	-0.00889637	-0.58605069	33.03321075
F418	EY	0.75	-30.1260414	10.99606991	-0.30841327	-0.00889637	-0.35474059	24.7861557
F418	EY	1.5	-30.1260414	10.99606991	-0.30841327	-0.00889637	-0.12343052	16.53909874
F418	EY	2.25	-30.1260414	10.99606991	-0.30841327	-0.00889637	0.107879534	8.292041779
F418	EY	3	-30.1260414	10.99606991	-0.30841327	-0.00889637	0.339189589	0.044985015

F420	COMB3	3	-8.66407681	-9.21391392	-0.37301669	-13.483181	0.345663548	41.27166748
F421	D	0	-5.60909462	-43.5514565	-0.61286205	10.43704128	-1.35578012	-54.6226463
F421	D	0.75	-5.60909462	-38.7111397	-0.61286205	10.43704128	-0.8961333	-23.5403633
F421	D	1.5	-5.60909462	-30.1302013	-0.61286205	10.43704128	-0.4364866	2.508944273
F421	D	2.25	-5.60909462	-21.5492592	-0.61286205	10.43704128	0.02316015	21.65496445
F421	D	3	-5.60909462	-16.7089443	-0.61286205	10.43704128	0.482806921	35.76800919
F421	L	0	-1.26114118	-11.2292356	0.148653075	4.169756413	0.320550889	-14.9306221
F421	L	0.75	-1.26114118	-10.5261106	0.148653075	4.169756413	0.209061012	-6.68447113
F421	L	1.5	-1.26114118	-8.4167347	0.148653075	4.169756413	0.097571149	0.506990731
F421	L	2.25	-1.26114118	-6.30735874	0.148653075	4.169756413	-0.01391871	5.940638065
F421	L	3	-1.26114118	-5.60423326	0.148653075	4.169756413	-0.12540857	10.31959629
F421	EX	0	5.564277172	0.696718633	-0.55893314	-3.54271317	-1.36905205	0.756374896
F421	EX	0.75	5.564277172	0.696718633	-0.55893314	-3.54271317	-0.94985187	0.233835623
F421	EX	1.5	5.564277172	0.696718633	-0.55893314	-3.54271317	-0.53065181	-0.28870368
F421	EX	2.25	5.564277172	0.696718633	-0.55893314	-3.54271317	-0.11145168	-0.81124294
F421	EX	3	5.564277172	0.696718633	-0.55893314	-3.54271317	0.307748437	-1.3337822
F421	EY	0	-0.58368033	9.849900246	0.890353024	0.008181858	1.724889874	29.62585449
F421	EY	0.75	-0.58368033	9.849900246	0.890353024	0.008181858	1.057124734	22.2384243
F421	EY	1.5	-0.58368033	9.849900246	0.890353024	0.008181858	0.389359593	14.85099602
F421	EY	2.25	-0.58368033	9.849900246	0.890353024	0.008181858	-0.27840558	7.463567734
F421	EY	3	-0.58368033	9.849900246	0.890353024	0.008181858	-0.94617075	0.076139115
F421	COMB1	0	-8.74873924	-70.2285233	-0.49758953	19.19606018	-1.1140548	-89.4361725
F421	COMB1	0.75	-8.74873924	-63.2951469	-0.49758953	19.19606018	-0.74086237	-38.9435883
F421	COMB1	1.5	-8.74873924	-49.6230164	-0.49758953	19.19606018	-0.36767009	3.821918249
F421	COMB1	2.25	-8.74873924	-35.9508858	-0.49758953	19.19606018	0.005522238	35.49097824
F421	COMB1	3	-8.74873924	-29.0175076	-0.49758953	19.19606018	0.378714591	59.43296432
F421	COMB2	0	-0.71164107	-45.4424171	-0.894714	8.608236313	-2.19622421	-51.9419327
F421	COMB2	0.75	-0.71164107	-40.1385994	-0.894714	8.608236313	-1.52518821	-19.5758648
F421	COMB2	1.5	-0.71164107	-30.4641609	-0.894714	8.608236313	-0.85415238	7.17334938
F421	COMB2	2.25	-0.71164107	-20.7897167	-0.894714	8.608236313	-0.18311648	26.12040138
F421	COMB2	3	-0.71164107	-15.4859037	-0.894714	8.608236313	0.48791942	39.45059967
F421	COMB3	0	-5.14692593	-38.7043762	0.162127346	11.16500378	0.057287376	-30.7115192
F421	COMB3	0.75	-5.14692593	-33.4005623	0.162127346	11.16500378	-0.06430814	-3.39898443
F421	COMB3	1.5	-5.14692593	-23.7261219	0.162127346	11.16500378	-0.18590379	18.29669762
F421	COMB3	2.25	-5.14692593	-14.0516787	0.162127346	11.16500378	-0.30749938	32.19021988
F421	COMB3	3	-5.14692593	-8.74786472	0.162127346	11.16500378	-0.42909497	40.46688461
F422	D	0	2.293047905	-84.9180527	-1.13357329	-0.30191976	-2.21354103	-108.297104
F422	D	0.75	2.293047905	-78.2074203	-1.13357329	-0.30191976	-1.36336052	-46.657444
F422	D	1.5	2.293047905	-64.0155411	-1.13357329	-0.30191976	-0.51318014	7.143774033
F422	D	2.25	2.293047905	-49.8236618	-1.13357329	-0.30191976	0.33700031	49.36592102
F422	D	3	2.293047905	-43.1130333	-1.13357329	-0.30191976	1.187180758	83.74961853
F422	L	0	1.022442222	-35.5367012	0.148008987	0.215133682	0.303389609	-43.915535
F422	L	0.75	1.022442222	-32.8648224	0.148008987	0.215133682	0.192382798	-17.9309654
F422	L	1.5	1.022442222	-24.8491955	0.148008987	0.215133682	0.081375994	4.045787334
F422	L	2.25	1.022442222	-16.8335667	0.148008987	0.215133682	-0.02963082	19.34284592
F422	L	3	1.022442222	-14.1616888	0.148008987	0.215133682	-0.14063762	30.63208771
F422	EX	0	0.482363105	-0.07786173	-0.46145755	-3.40413666	-1.10625327	-0.25923651
F422	EX	0.75	0.482363105	-0.07786173	-0.46145755	-3.40413666	-0.76015991	-0.2008402
F422	EX	1.5	0.482363105	-0.07786173	-0.46145755	-3.40413666	-0.41406658	-0.14244388
F422	EX	2.25	0.482363105	-0.07786173	-0.46145755	-3.40413666	-0.06797324	-0.08404755
F422	EX	3	0.482363105	-0.07786173	-0.46145755	-3.40413666	0.27812013	-0.02565122
F422	EY	0	-29.5597248	10.62581539	1.128694057	0.006641906	2.125038147	31.92507935
F422	EY	0.75	-29.5597248	10.62581539	1.128694057	0.006641906	1.278517008	23.95571136
F422	EY	1.5	-29.5597248	10.62581539	1.128694057	0.006641906	0.431996107	15.98634624
F422	EY	2.25	-29.5597248	10.62581539	1.128694057	0.006641906	-0.41452485	8.016980171
F422	EY	3	-29.5597248	10.62581539	1.128694057	0.006641906	-1.26104581	0.047613356
F422	COMB1	0	4.387565136	-158.760376	-1.12347353	-0.01808981	-2.17082596	-200.22139
F422	COMB1	0.75	4.387565136	-146.432617	-1.12347353	-0.01808981	-1.32822013	-84.6784821
F422	COMB1	1.5	4.387565136	-116.577362	-1.12347353	-0.01808981	-0.48561457	15.04578876
F422	COMB1	2.25	4.387565136	-86.7220993	-1.12347353	-0.01808981	0.356991082	90.18766022
F422	COMB1	3	4.387565136	-74.3943481	-1.12347353	-0.01808981	1.199596643	149.5108795
F422	COMB2	0	-6.0822978	-97.0914688	-1.26569903	-3.77043772	-2.70423555	-117.757263
F422	COMB2	0.75	-6.0822978	-89.2036667	-1.26569903	-3.77043772	-1.75496054	-47.3003922
F422	COMB2	1.5	-6.0822978	-71.7772675	-1.26569903	-3.77043772	-0.80568588	13.66365528
F422	COMB2	2.25	-6.0822978	-54.350872	-1.26569903	-3.77043772	0.143589005	60.36557007
F422	COMB2	3	-6.0822978	-46.4630737	-1.26569903	-3.77043772	1.092863798	97.57465363
F422	COMB3	0	-28.1559963	-89.2254333	-0.10385954	-1.3145777	-0.3458302	-94.1056824
F422	COMB3	0.75	-28.1559963	-81.3376312	-0.10385954	-1.3145777	-0.26793543	-29.5483398
F422	COMB3	1.5	-28.1559963	-63.9112358	-0.10385954	-1.3145777	-0.19004078	25.51618004
F422	COMB3	2.25	-28.1559963	-46.4848366	-0.10385954	-1.3145777	-0.11214603	66.31856537
F422	COMB3	3	-28.1559963	-38.5970383	-0.10385954	-1.3145777	-0.03425134	97.62812042
F423	D	0	3.326478004	-89.5795898	-0.74086553	-13.3372803	-1.56162202	-100.334137
F423	D	0.75	3.326478004	-75.3689499	-0.74086553	-13.3372803	-1.0059725	-38.0108185
F423	D	1.5	3.326478004	-53.6770706	-0.74086553	-13.3372803	-0.45032313	10.84904385
F423	D	2.25	3.326478004	-31.9851837	-0.74086553	-13.3372803	0.105326317	42.50482941
F423	D	3	3.326478004	-17.7745514	-0.74086553	-13.3372803	0.660975814	60.69715881
F423	L	0	0.669549704	-27.3395844	0.08345592	-4.39126015	0.211197153	-31.6342487
F423	L	0.75	0.669549704	-24.6677074	0.08345592	-4.39126015	0.148605168	-11.7975168
F423	L	1.5	0.669549704	-16.6520786	0.08345592	-4.39126015	0.086013198	4.031394958
F423	L	2.25	0.669549704	-8.63644886	0.08345592	-4.39126015	0.023421232	13.18061352
F423	L	3	0.669549704	-5.96457243	0.08345592	-4.39126015	-0.03917074	18.32201576
F423	EX	0	1.490275383	-1.02664995	-0.33259395	-2.56846571	-0.99567729	-1.77706683
F423	EX	0.75	1.490275383	-1.02664995	-0.33259395	-2.56846571	-0.74623162	-1.00707877
F423	EX	1.5	1.490275383	-1.02664995	-0.33259395	-2.56846571	-0.49678603	-0.23709096

F423	EX	2.25	1.490275383	-1.02664995	-0.33259395	-2.56846571	-0.24734044	0.532896936
F423	EX	3	1.490275383	-1.02664995	-0.33259395	-2.56846571	0.00210515	1.302884817
F423	EY	0	-30.1260338	10.99607468	0.308413267	0.008896489	0.586048782	33.03322601
F423	EY	0.75	-30.1260338	10.99607468	0.308413267	0.008896489	0.354738742	24.78616524
F423	EY	1.5	-30.1260338	10.99607468	0.308413267	0.008896489	0.123428658	16.53910637
F423	EY	2.25	-30.1260338	10.99607468	0.308413267	0.008896489	-0.10788141	8.292045593
F423	EY	3	-30.1260338	10.99607468	0.308413267	0.008896489	-0.3391915	0.044985056
F423	COMB1	0	5.063053131	-151.238846	-0.7555092	-23.0307522	-1.53603089	-171.015762
F423	COMB1	0.75	5.063053131	-129.911072	-0.7555092	-23.0307522	-0.9693988	-64.4890137
F423	COMB1	1.5	5.063053131	-91.055809	-0.7555092	-23.0307522	-0.40276662	19.46908379
F423	COMB1	2.25	5.063053131	-52.2005386	-0.7555092	-23.0307522	0.163865551	72.09477234
F423	COMB1	3	5.063053131	-30.8727779	-0.7555092	-23.0307522	0.730497777	102.1518173
F423	COMB2	0	-4.24355555	-100.269356	-0.99870473	-18.0429516	-2.41909671	-106.749428
F423	COMB2	0.75	-4.24355555	-84.506546	-0.99870473	-18.0429516	-1.67006755	-36.8622627
F423	COMB2	1.5	-4.24355555	-59.2051468	-0.99870473	-18.0429516	-0.92103863	17.62581444
F423	COMB2	2.25	-4.24355555	-33.9037437	-0.99870473	-18.0429516	-0.17200969	51.94550705
F423	COMB2	3	-4.24355555	-18.1409397	-0.99870473	-18.0429516	0.577019334	70.86611176
F423	COMB3	0	-27.4591885	-91.4480515	-0.53255337	-16.1871166	-1.27146316	-81.1905212
F423	COMB3	0.75	-27.4591885	-75.6852417	-0.53255337	-16.1871166	-0.87204784	-17.9193363
F423	COMB3	1.5	-27.4591885	-50.3838463	-0.53255337	-16.1871166	-0.47263262	29.9527626
F423	COMB3	2.25	-27.4591885	-25.0824413	-0.53255337	-16.1871166	-0.0732174	57.65647507
F423	COMB3	3	-27.4591885	-9.3196373	-0.53255337	-16.1871166	0.326197863	69.96109772
F424	D	0	0.096100181	-35.7861595	-0.41339082	0.000105585	-1.0494107	-25.4737625
F424	D	1.25	0.096100181	-23.1455345	-0.41339082	0.000105585	-0.53267217	13.52325916
F424	D	2.5	0.096100181	3.626334667	-0.41339082	0.000105585	-0.01593363	25.94788933
F424	D	3.75	0.096100181	30.3982029	-0.41339082	0.000105585	0.500804901	4.457421303
F424	D	5	0.096100181	43.03882599	-0.41339082	0.000105585	1.017543435	-43.6054382
F424	L	0	0.055207089	-11.9893961	0.057662293	0.001203229	0.145983711	-8.87464046
F424	L	1.25	0.055207089	-8.08314514	0.057662293	0.001203229	0.073905841	4.484500408
F424	L	2.5	0.055207089	1.13560462	0.057662293	0.001203229	0.001827976	8.911349297
F424	L	3.75	0.055207089	10.35435486	0.057662293	0.001203229	-0.07024989	1.645488739
F424	L	5	0.055207089	14.26060581	0.057662293	0.001203229	-0.14232776	-14.5526648
F424	EX	0	-1.0708288	1.74443531	0.214366496	-0.00322003	0.53199333	5.195146561
F424	EX	1.25	-1.0708288	1.74443531	0.214366496	-0.00322003	0.264035225	3.014602423
F424	EX	2.5	-1.0708288	1.74443531	0.214366496	-0.00322003	-0.00392293	0.834058225
F424	EX	3.75	-1.0708288	1.74443531	0.214366496	-0.00322003	-0.27188107	-1.34648597
F424	EX	5	-1.0708288	1.74443531	0.214366496	-0.00322003	-0.53983921	-3.52703023
F424	EY	0	0.042515855	0.001713224	0.29129678	-0.00750769	0.739149153	0.005017733
F424	EY	1.25	0.042515855	0.001713224	0.29129678	-0.00750769	0.375028193	0.002876203
F424	EY	2.5	0.042515855	0.001713224	0.29129678	-0.00750769	0.010907196	0.000734674
F424	EY	3.75	0.042515855	0.001713224	0.29129678	-0.00750769	-0.35321379	-0.00140686
F424	EY	5	0.042515855	0.001713224	0.29129678	-0.00750769	-0.71733481	-0.00354839
F424	COMB1	0	0.203651562	-62.1264229	-0.40380931	0.002051868	-1.02571893	-44.7679405
F424	COMB1	1.25	0.203651562	-40.7076759	-0.40380931	0.002051868	-0.52095729	23.40311241
F424	COMB1	2.5	0.203651562	6.168569088	-0.40380931	0.002051868	-0.0161956	45.39562607
F424	COMB1	3.75	0.203651562	53.04481125	-0.40380931	0.002051868	0.488566071	7.981687546
F424	COMB1	5	0.203651562	74.46356201	-0.40380931	0.002051868	0.993327737	-75.6107864
F424	COMB2	0	-0.97661984	-39.5460968	-0.10226892	-0.00520777	-0.27245128	-24.1644058
F424	COMB2	1.25	-0.97661984	-25.0429726	-0.10226892	-0.00520777	-0.14461513	18.73305893
F424	COMB2	2.5	-0.97661984	5.971396923	-0.10226892	-0.00520777	-0.01677897	30.91584015
F424	COMB2	3.75	-0.97661984	36.98576736	-0.10226892	-0.00520777	0.11105717	3.804565191
F424	COMB2	5	-0.97661984	51.48888779	-0.10226892	-0.00520777	0.238893315	-54.0213928
F424	COMB3	0	-0.174374	-40.8008308	-0.04250966	-0.0084075	-0.11221188	-27.9012222
F424	COMB3	1.25	-0.174374	-26.2977066	-0.04250966	-0.0084075	-0.05907476	16.56465912
F424	COMB3	2.5	-0.174374	4.716662884	-0.04250966	-0.0084075	-0.00593767	30.31585884
F424	COMB3	3.75	-0.174374	35.73103333	-0.04250966	-0.0084075	0.047199417	4.773001194
F424	COMB3	5	-0.174374	50.23415375	-0.04250966	-0.0084075	0.100336477	-51.484539
F425	D	0	0.213397995	-42.8873405	-0.44056743	-0.07851773	-1.09163463	-43.4245644
F425	D	1.25	0.213397995	-30.2467155	-0.44056743	-0.07851773	-0.54092532	4.448933601
F425	D	2.5	0.213397995	-3.47484732	-0.44056743	-0.07851773	0.009783984	25.75004196
F425	D	3.75	0.213397995	23.29702187	-0.44056743	-0.07851773	0.56049329	13.13605213
F425	D	5	0.213397995	35.93764496	-0.44056743	-0.07851773	1.111202598	-26.0503292
F425	L	0	0.060715243	-14.1802111	0.051486067	-0.0228221	0.124039888	-14.4284487
F425	L	1.25	0.060715243	-10.273962	0.051486067	-0.0228221	0.059682298	1.669211745
F425	L	2.5	0.060715243	-1.05521131	0.051486067	-0.0228221	-0.00467529	8.834580421
F425	L	3.75	0.060715243	8.163538933	0.051486067	-0.0228221	-0.06903288	4.307240009
F425	L	5	0.060715243	12.06978893	0.051486067	-0.0228221	-0.13339047	-9.15239239
F425	EX	0	-0.9474839	1.704743385	0.227887243	0.016476037	0.537775934	3.5696311
F425	EX	1.25	-0.9474839	1.704743385	0.227887243	0.016476037	0.252916843	1.438701868
F425	EX	2.5	-0.9474839	1.704743385	0.227887243	0.016476037	-0.03194221	-0.69222748
F425	EX	3.75	-0.9474839	1.704743385	0.227887243	0.016476037	-0.31680125	-2.82315683
F425	EX	5	-0.9474839	1.704743385	0.227887243	0.016476037	-0.60166031	-4.95408583
F425	EY	0	0.059766583	0.00106171	0.740046501	-0.01563676	1.842630506	0.001739829
F425	EY	1.25	0.059766583	0.00106171	0.740046501	-0.01563676	0.917572558	0.000412692
F425	EY	2.5	0.059766583	0.00106171	0.740046501	-0.01563676	-0.00748561	-0.00091444
F425	EY	3.75	0.059766583	0.00106171	0.740046501	-0.01563676	-0.93254375	-0.00224158
F425	EY	5	0.059766583	0.00106171	0.740046501	-0.01563676	-1.85760188	-0.00356872
F425	COMB1	0	0.353221983	-74.1531448	-0.44630319	-0.13073663	-1.11149764	-75.1949997
F425	COMB1	1.25	0.353221983	-52.7343979	-0.44630319	-0.13073663	-0.55361867	8.009459496
F425	COMB1	2.5	0.353221983	-5.85815477	-0.44630319	-0.13073663	0.004260316	45.03538132
F425	COMB1	3.75	0.353221983	41.01808929	-0.44630319	-0.13073663	0.562139332	22.65484619
F425	COMB1	5	0.353221983	62.43683624	-0.44630319	-0.13073663	1.120018363	-45.9042244
F425	COMB2	0	-0.71862614	-47.7337303	0.022600252	-0.07750545	0.029882926	-46.4456367
F425	COMB2	1.25	-0.71862614	-33.2306061	0.022600252	-0.07750545	0.001632639	6.686368465

F425	COMB2	2.5	-0.71862614	-2.21623731	0.022600252	-0.07750545	-0.02661769	29.10369301
F425	COMB2	3.75	-0.71862614	28.79813194	0.022600252	-0.07750545	-0.05486801	12.22696209
F425	COMB2	5	-0.71862614	43.30125427	0.022600252	-0.07750545	-0.0831183	-35.3644524
F425	COMB3	0	0.007490692	-48.9603653	0.402455598	-0.10086122	0.997017682	-49.0144958
F425	COMB3	1.25	0.007490692	-34.4572411	0.402455598	-0.10086122	0.493948311	5.650806427
F425	COMB3	2.5	0.007490692	-3.44287229	0.402455598	-0.10086122	-0.00912122	29.60142517
F425	COMB3	3.75	0.007490692	27.57149696	0.402455598	-0.10086122	-0.51219076	14.25798702
F425	COMB3	5	0.007490692	42.07461929	0.402455598	-0.10086122	-1.01526022	-31.8001328
F426	D	0	0.207457751	-35.8439865	0.439254284	0.078793481	1.107897162	-25.8926353
F426	D	1.25	0.207457751	-23.2033672	0.439254284	0.078793481	0.558829308	13.1766758
F426	D	2.5	0.207457751	3.568504095	0.439254284	0.078793481	0.009761459	25.67359352
F426	D	3.75	0.207457751	30.34037399	0.439254284	0.078793481	-0.5393064	4.25541544
F426	D	5	0.207457751	42.98099899	0.439254284	0.078793481	-1.08837426	-43.735157
F426	L	0	0.06118058	-12.1680546	-0.05300834	0.023238966	-0.13733296	-9.40099812
F426	L	1.25	0.06118058	-8.26180458	-0.05300834	0.023238966	-0.07107253	4.181466103
F426	L	2.5	0.06118058	0.956946135	-0.05300834	0.023238966	-0.00481211	8.831637383
F426	L	3.75	0.06118058	10.17569637	-0.05300834	0.023238966	0.061448313	1.789100647
F426	L	5	0.06118058	14.08194637	-0.05300834	0.023238966	0.127708733	-14.185729
F426	EX	0	-0.18068111	1.693598747	0.167668432	0.016391978	0.436978906	4.92080307
F426	EX	1.25	-0.18068111	1.693598747	0.167668432	0.016391978	0.227393389	2.803804636
F426	EX	2.5	-0.18068111	1.693598747	0.167668432	0.016391978	0.017807849	0.686806202
F426	EX	3.75	-0.18068111	1.693598747	0.167668432	0.016391978	-0.19177769	-1.43019235
F426	EX	5	-0.18068111	1.693598747	0.167668432	0.016391978	-0.40136319	-3.5471909
F426	EY	0	0.059755981	-0.00106164	-0.74004501	0.015637087	-1.85759878	-0.00356851
F426	EY	1.25	0.059755981	-0.00106164	-0.74004501	0.015637087	-0.93254244	-0.00224146
F426	EY	2.5	0.059755981	-0.00106164	-0.74004501	0.015637087	-0.00748613	-0.00091442
F426	EY	3.75	0.059755981	-0.00106164	-0.74004501	0.015637087	0.917570174	0.000412629
F426	EY	5	0.059755981	-0.00106164	-0.74004501	0.015637087	1.842626452	0.001739675
F426	COMB1	0	0.346838236	-62.4816704	0.442291796	0.13173452	1.109743834	-46.1127586
F426	COMB1	1.25	0.346838236	-41.0629272	0.442291796	0.13173452	0.556879163	22.50235748
F426	COMB1	2.5	0.346838236	5.813318729	0.442291796	0.13173452	0.004014371	44.93893433
F426	COMB1	3.75	0.346838236	52.68956375	0.442291796	0.13173452	-0.54885036	7.969059467
F426	COMB1	5	0.346838236	74.10831451	0.442291796	0.13173452	-1.10171509	-75.1793518
F426	COMB2	0	0.068920717	-39.7165833	0.384942025	0.11194481	0.987161696	-25.056675
F426	COMB2	1.25	0.068920717	-25.2134628	0.384942025	0.11194481	0.505984247	18.05390358
F426	COMB2	2.5	0.068920717	5.800907612	0.384942025	0.11194481	0.024806708	30.44979668
F426	COMB2	3.75	0.068920717	36.8152771	0.384942025	0.11194481	-0.4563708	3.551633835
F426	COMB2	5	0.068920717	51.31840134	0.384942025	0.11194481	-0.93754834	-54.0612144
F426	COMB3	0	0.242931753	-40.9367561	-0.27971235	0.111635841	-0.69279826	-28.6022758
F426	COMB3	1.25	0.242931753	-26.4336338	-0.27971235	0.111635841	-0.34315771	16.03351593
F426	COMB3	2.5	0.242931753	4.58073616	-0.27971235	0.111635841	0.00648275	29.95462418
F426	COMB3	3.75	0.242931753	35.59510803	-0.27971235	0.111635841	0.356123209	4.581675529
F426	COMB3	5	0.242931753	50.09822845	-0.27971235	0.111635841	0.705763578	-51.5059586
F427	D	0	0.091933541	-43.243084	0.412473857	-0.00026095	1.015265226	-44.1622467
F427	D	1.25	0.091933541	-30.602459	0.412473857	-0.00026095	0.499672979	4.155932426
F427	D	2.5	0.091933541	-3.83058929	0.412473857	-0.00026095	-0.01591934	25.90172005
F427	D	3.75	0.091933541	22.94128036	0.412473857	-0.00026095	-0.53151166	13.73240662
F427	D	5	0.091933541	35.58190155	0.412473857	-0.00026095	-1.047104	-25.0092983
F427	L	0	0.057465013	-14.2774963	-0.05906258	-0.00137345	-0.14579962	-14.5637999
F427	L	1.25	0.057465013	-10.3712463	-0.05906258	-0.00137345	-0.07197139	1.655467749
F427	L	2.5	0.057465013	-1.15249622	-0.05906258	-0.00137345	0.00185684	8.942442894
F427	L	3.75	0.057465013	8.066254616	-0.05906258	-0.00137345	0.075685069	4.536708832
F427	L	5	0.057465013	11.97250366	-0.05906258	-0.00137345	0.149513289	-8.80131817
F427	EX	0	-0.12811613	1.738350749	0.187372953	-0.00279649	0.458668441	3.514182329
F427	EX	1.25	-0.12811613	1.738350749	0.187372953	-0.00279649	0.224452727	1.341243982
F427	EX	2.5	-0.12811613	1.738350749	0.187372953	-0.00279649	-0.00976398	-0.83169436
F427	EX	3.75	-0.12811613	1.738350749	0.187372953	-0.00279649	-0.24398018	-3.00463247
F427	EX	5	-0.12811613	1.738350749	0.187372953	-0.00279649	-0.47819638	-5.1775713
F427	EY	0	0.04251178	-0.00171313	-0.29129478	0.007507784	-0.71732968	-0.0035482
F427	EY	1.25	0.04251178	-0.00171313	-0.29129478	0.007507784	-0.35321122	-0.00140679
F427	EY	2.5	0.04251178	-0.00171313	-0.29129478	0.007507784	0.010907254	0.000734633
F427	EY	3.75	0.04251178	-0.00171313	-0.29129478	0.007507784	0.375025749	0.002876051
F427	EY	5	0.04251178	-0.00171313	-0.29129478	0.007507784	0.739144206	0.00501747
F427	COMB1	0	0.202264264	-74.7356949	0.400468498	-0.00251065	0.985038936	-76.2967758
F427	COMB1	1.25	0.202264264	-53.3169441	0.400468498	-0.00251065	0.48445335	7.635867596
F427	COMB1	2.5	0.202264264	-6.44070148	0.400468498	-0.00251065	-0.01613227	45.38997269
F427	COMB1	3.75	0.202264264	40.43554306	0.400468498	-0.00251065	-0.51671791	23.73762131
F427	COMB1	5	0.202264264	61.85429001	0.400468498	-0.00251065	-1.01730359	-44.0932655
F427	COMB2	0	-0.00457728	-48.1039963	0.516665995	-0.00123605	1.268864632	-47.3218956
F427	COMB2	1.25	-0.00457728	-33.600872	0.516665995	-0.00123605	0.623032153	6.272945881
F427	COMB2	2.5	-0.00457728	-2.58650184	0.516665995	-0.00123605	-0.02280034	29.15310287
F427	COMB2	3.75	-0.00457728	28.42786789	0.516665995	-0.00123605	-0.66863281	12.73920155
F427	COMB2	5	-0.00457728	42.93098831	0.516665995	-0.00123605	-1.3144654	-34.3893852
F427	COMB3	0	0.118912488	-49.3568649	0.167655811	0.006295647	0.411386043	-49.8547134
F427	COMB3	1.25	0.118912488	-34.8537445	0.167655811	0.006295647	0.201816306	5.30621624
F427	COMB3	2.5	0.118912488	-3.83937359	0.167655811	0.006295647	-0.00775344	29.75246239
F427	COMB3	3.75	0.118912488	27.17499542	0.167655811	0.006295647	-0.21732317	14.90465069
F427	COMB3	5	0.118912488	41.67811966	0.167655811	0.006295647	-0.42689297	-30.6578445
F428	D	0	2.53766942	17.91353989	0.647852063	-11.9062386	0.380874187	54.30537415
F428	D	0.75	2.53766942	30.25384712	0.647852063	-11.9062386	-0.10501469	36.47640228
F428	D	1.5	2.53766942	46.33478165	0.647852063	-11.9062386	-0.59090352	7.989463806
F428	D	2.25	2.53766942	62.41571426	0.647852063	-11.9062386	-1.07679248	-33.0257454
F428	D	3	2.53766942	74.75601959	0.647852063	-11.9062386	-1.56268132	-84.6989212
F428	L	0	0.313650966	6.020288467	-0.13764837	-4.45107603	-0.11009431	11.44494247

F430	COMB1	0	-8.47816753	33.4828949	0.85359323	26.74361229	0.732328713	58.81685638
F430	COMB1	0.75	-8.47816753	40.30376434	0.85359323	26.74361229	0.092133962	31.55397797
F430	COMB1	1.5	-8.47816753	53.63838577	0.85359323	26.74361229	-0.54806077	-3.26721072
F430	COMB1	2.25	-8.47816753	66.9730072	0.85359323	26.74361229	-1.18825555	-48.9035759
F430	COMB1	3	-8.47816753	73.79387665	0.85359323	26.74361229	-1.82845032	-102.098259
F430	COMB2	0	-12.1555967	26.3394928	-0.5150798	19.30816841	-0.84085846	42.10422134
F430	COMB2	0.75	-12.1555967	31.62115479	-0.5150798	19.30816841	-0.45454872	20.63937759
F430	COMB2	1.5	-12.1555967	41.22914505	-0.5150798	19.30816841	-0.06823897	-6.40908098
F430	COMB2	2.25	-12.1555967	50.8371315	-0.5150798	19.30816841	0.318070799	-41.204319
F430	COMB2	3	-12.1555967	56.11879349	-0.5150798	19.30816841	0.704380393	-81.5831757
F430	COMB3	0	-9.06653214	32.86070633	-0.36552593	18.31695366	-0.66959661	41.1708107
F430	COMB3	0.75	-9.06653214	38.14236832	-0.36552593	18.31695366	-0.39545226	14.81506062
F430	COMB3	1.5	-9.06653214	47.75035858	-0.36552593	18.31695366	-0.12130789	-17.1243076
F430	COMB3	2.25	-9.06653214	57.35834503	-0.36552593	18.31695366	0.152836442	-56.8104515
F430	COMB3	3	-9.06653214	62.64000702	-0.36552593	18.31695366	0.426980674	-102.080223
F431	D	0	-5.16984034	19.1350441	-0.82031977	-15.4555941	-0.62509024	35.6892128
F431	D	0.75	-5.16984034	23.97535324	-0.82031977	-15.4555941	-0.00985066	19.75661087
F431	D	1.5	-5.16984034	32.55628967	-0.82031977	-15.4555941	0.605388939	-1.20896077
F431	D	2.25	-5.16984034	41.13722229	-0.82031977	-15.4555941	1.220628619	-29.0778084
F431	D	3	-5.16984034	45.97753143	-0.82031977	-15.4555941	1.835868239	-61.9796181
F431	L	0	-1.3141495	6.563821316	0.087472491	-5.2312417	0.011924383	10.29635715
F431	L	0.75	-1.3141495	7.266946316	0.087472491	-5.2312417	-0.05367997	5.197711468
F431	L	1.5	-1.3141495	9.376320839	0.087472491	-5.2312417	-0.11928431	-0.95562071
F431	L	2.25	-1.3141495	11.48569489	0.087472491	-5.2312417	-0.18488868	-8.86676407
F431	L	3	-1.3141495	12.18881989	0.087472491	-5.2312417	-0.25049302	-17.8325958
F431	EX	0	5.731945992	-0.99688011	-0.37825209	1.378090262	-0.12923048	-1.35017419
F431	EX	0.75	5.731945992	-0.99688011	-0.37825209	1.378090262	0.154458508	-0.60251427
F431	EX	1.5	5.731945992	-0.99688011	-0.37825209	1.378090262	0.438147485	0.14514555
F431	EX	2.25	5.731945992	-0.99688011	-0.37825209	1.378090262	0.721836448	0.892805457
F431	EX	3	5.731945992	-0.99688011	-0.37825209	1.378090262	1.00552547	1.64046526
F431	EY	0	-1.32372534	9.850961685	0.830597043	0.004613346	0.911428034	0.060502026
F431	EY	0.75	-1.32372534	9.850961685	0.830597043	0.004613346	0.288480401	-7.32771635
F431	EY	1.5	-1.32372534	9.850961685	0.830597043	0.004613346	-0.33446723	-14.7159357
F431	EY	2.25	-1.32372534	9.850961685	0.830597043	0.004613346	-0.95741487	-22.1041546
F431	EY	3	-1.32372534	9.850961685	0.830597043	0.004613346	-1.58036256	-29.4923744
F431	COMB1	0	-8.30644703	33.46416855	-0.84442776	-26.9166985	-0.73102933	59.30122757
F431	COMB1	0.75	-8.30644703	40.39753723	-0.84442776	-26.9166985	-0.09770875	32.0242691
F431	COMB1	1.5	-8.30644703	54.06966019	-0.84442776	-26.9166985	0.535611868	-2.9797461
F431	COMB1	2.25	-8.30644703	67.74177551	-0.84442776	-26.9166985	1.168932438	-49.0801926
F431	COMB1	3	-8.30644703	74.67514801	-0.84442776	-26.9166985	1.802253127	-102.907692
F431	COMB2	0	-0.32669881	24.23068237	-0.96363479	-16.4484386	-0.49924231	39.33865356
F431	COMB2	0.75	-0.32669881	29.53449249	-0.96363479	-16.4484386	0.223483488	19.44988632
F431	COMB2	1.5	-0.32669881	39.20892715	-0.96363479	-16.4484386	0.946209311	-6.05572367
F431	COMB2	2.25	-0.32669881	48.883358	-0.96363479	-16.4484386	1.66893518	-39.3634834
F431	COMB2	3	-0.32669881	54.18716812	-0.96363479	-16.4484386	2.391661167	-78.2880859
F431	COMB3	0	-5.42663813	32.18889236	-0.08080442	-17.4372711	0.263703257	40.3552475
F431	COMB3	0.75	-5.42663813	37.49270248	-0.08080442	-17.4372711	0.324306458	14.49782562
F431	COMB3	1.5	-5.42663813	47.16713715	-0.08080442	-17.4372711	0.384909719	-16.9764404
F431	COMB3	2.25	-5.42663813	56.84156799	-0.08080442	-17.4372711	0.44551295	-56.2528572
F431	COMB3	3	-5.42663813	62.14538193	-0.08080442	-17.4372711	0.506116271	-101.146111
F432	D	0	2.2662673	43.11104584	-1.01804912	-0.72900969	-0.91645885	83.82867432
F432	D	0.75	2.2662673	49.8216629	-1.01804912	-0.72900969	-0.15292221	49.44649506
F432	D	1.5	2.2662673	64.01353455	-1.01804912	-0.72900969	0.610614359	7.225889683
F432	D	2.25	2.2662673	78.20539856	-1.01804912	-0.72900969	1.374150991	-46.5737724
F432	D	3	2.2662673	84.91602325	-1.01804912	-0.72900969	2.137687683	-108.211861
F432	L	0	1.016388059	14.19775391	0.151724577	-0.16293694	0.132870734	30.65670204
F432	L	0.75	1.016388059	16.869627	0.151724577	-0.16293694	0.019077346	19.34041977
F432	L	1.5	1.016388059	24.885252	0.151724577	-0.16293694	-0.09471603	4.016329765
F432	L	2.25	1.016388059	32.90087509	0.151724577	-0.16293694	-0.20850943	-17.9874439
F432	L	3	1.016388059	35.57275009	0.151724577	-0.16293694	-0.32230282	-43.9990273
F432	EX	0	0.502067626	-0.12261361	-0.51402253	3.657236814	-0.5819115	-0.00646276
F432	EX	0.75	0.502067626	-0.12261361	-0.51402253	3.657236814	-0.19639477	0.085497424
F432	EX	1.5	0.502067626	-0.12261361	-0.51402253	3.657236814	0.189121991	0.177457601
F432	EX	2.25	0.502067626	-0.12261361	-0.51402253	3.657236814	0.574638784	0.269417763
F432	EX	3	0.502067626	-0.12261361	-0.51402253	3.657236814	0.960155547	0.361377954
F432	EY	0	-29.1109753	10.62646675	1.145938158	0.001354027	1.298910499	0.055742659
F432	EY	0.75	-29.1109753	10.62646675	1.145938158	0.001354027	0.439457059	-7.91410542
F432	EY	1.5	-29.1109753	10.62646675	1.145938158	0.001354027	-0.41999632	-15.883954
F432	EY	2.25	-29.1109753	10.62646675	1.145938158	0.001354027	-1.2794497	-23.8538017
F432	EY	3	-29.1109753	10.62646675	1.145938158	0.001354027	-2.13890314	-31.8236523
F432	COMB1	0	4.345741749	74.44966125	-0.9788996	-1.1355108	-0.88715744	149.6451263
F432	COMB1	0.75	4.345741749	86.77739716	-0.9788996	-1.1355108	-0.15298289	90.28046417
F432	COMB1	1.5	4.345741749	116.6326447	-0.9788996	-1.1355108	0.581191599	15.09719563
F432	COMB1	2.25	4.345741749	146.4878845	-0.9788996	-1.1355108	1.315366149	-84.6684418
F432	COMB1	3	4.345741749	158.8156281	-0.9788996	-1.1355108	2.04954052	-200.252686
F432	COMB2	0	-5.95057392	52.95932007	-1.19220114	2.968881369	-1.11354911	97.68784332
F432	COMB2	0.75	-5.95057392	60.84711075	-1.19220114	2.968881369	-0.21939856	55.60660172
F432	COMB2	1.5	-5.95057392	78.27349854	-1.19220114	2.968881369	0.674751997	4.032551289
F432	COMB2	2.25	-5.95057392	95.69988251	-1.19220114	2.968881369	1.568902493	-61.8036079
F432	COMB2	3	-5.95057392	103.5876694	-1.19220114	2.968881369	2.463052988	-137.132568
F432	COMB3	0	-27.7086296	60.85805511	0.020159641	0.336665988	0.260126382	97.7334671
F432	COMB3	0.75	-27.7086296	68.74584961	0.020159641	0.336665988	0.245006606	49.72817612
F432	COMB3	1.5	-27.7086296	86.17223358	0.020159641	0.336665988	0.229886845	-7.76992416
F432	COMB3	2.25	-27.7086296	103.5986176	0.020159641	0.336665988	0.214767069	-79.5301285

F432	COMB3	3	-27.7086296	111.4864044	0.020159641	0.336665988	0.199647397	-160.783157
F433	D	0	2.914004087	17.80735207	-0.64893198	11.6720171	-0.38612822	60.69689941
F433	D	0.75	2.914004087	32.01797104	-0.64893198	11.6720171	0.100570604	42.47998428
F433	D	1.5	2.914004087	53.70983505	-0.64893198	11.6720171	0.587269425	10.79964638
F433	D	2.25	2.914004087	75.40170288	-0.64893198	11.6720171	1.073968291	-38.0847435
F433	D	3	2.914004087	89.61232758	-0.64893198	11.6720171	1.560667038	-100.432564
F433	L	0	0.728612185	6.007932186	0.140920922	4.410058022	0.110342562	18.32064056
F433	L	0.75	0.728612185	8.679805756	0.140920922	4.410058022	0.004651897	13.14672565
F433	L	1.5	0.728612185	16.69542885	0.140920922	4.410058022	-0.10103876	3.964999676
F433	L	2.25	0.728612185	24.71105194	0.140920922	4.410058022	-0.20672944	-11.89641
F433	L	3	0.728612185	27.38292503	0.140920922	4.410058022	-0.3124201	-31.7656288
F433	EX	0	1.30290246	0.711700678	-0.46071008	2.609105349	-0.47609127	1.300088406
F433	EX	0.75	1.30290246	0.711700678	-0.46071008	2.609105349	-0.13055879	0.766313076
F433	EX	1.5	1.30290246	0.711700678	-0.46071008	2.609105349	0.214973673	0.232537732
F433	EX	2.25	1.30290246	0.711700678	-0.46071008	2.609105349	0.560506165	-0.30123761
F433	EX	3	1.30290246	0.711700678	-0.46071008	2.609105349	0.906038582	-0.83501297
F433	EY	0	-29.8347397	10.99435997	0.350925058	0.003879019	0.399952739	0.052492838
F433	EY	0.75	-29.8347397	10.99435997	0.350925058	0.003879019	0.136759043	-8.19327545
F433	EY	1.5	-29.8347397	10.99435997	0.350925058	0.003879019	-0.12643465	-16.439045
F433	EY	2.25	-29.8347397	10.99435997	0.350925058	0.003879019	-0.38962835	-24.6848106
F433	EY	3	-29.8347397	10.99435997	0.350925058	0.003879019	-0.65282202	-32.9305801
F433	COMB1	0	4.662584782	30.98151398	-0.55324495	21.06251335	-0.28680578	102.1492996
F433	COMB1	0.75	4.662584782	52.30925369	-0.55324495	21.06251335	0.128127769	72.01074219
F433	COMB1	1.5	4.662584782	91.16448975	-0.55324495	21.06251335	0.543061316	19.30357552
F433	COMB1	2.25	4.662584782	130.0197296	-0.55324495	21.06251335	0.957994878	-64.7359467
F433	COMB1	3	4.662584782	151.3474731	-0.55324495	21.06251335	1.372928381	-171.344086
F433	COMB2	0	-4.76022148	24.79005241	-1.00328207	16.34643173	-0.73744607	70.86486816
F433	COMB2	0.75	-4.76022148	40.55284119	-1.00328207	16.34643173	0.015015244	46.95745468
F433	COMB2	1.5	-4.76022148	65.85422516	-1.00328207	16.34643173	0.767476559	7.650980949
F433	COMB2	2.25	-4.76022148	91.1556015	-1.00328207	16.34643173	1.519937873	-51.8238487
F433	COMB2	3	-4.76022148	106.918396	-1.00328207	16.34643173	2.272399187	-126.697739
F433	COMB3	0	-27.6268444	32.35848236	-0.41364089	14.47072697	-0.10069508	69.96739197
F433	COMB3	0.75	-27.6268444	48.12127304	-0.41364089	14.47072697	0.209535465	40.38365173
F433	COMB3	1.5	-27.6268444	73.4226532	-0.41364089	14.47072697	0.519766033	-4.59914351
F433	COMB3	2.25	-27.6268444	98.72402954	-0.41364089	14.47072697	0.829996645	-69.7502899
F433	COMB3	3	-27.6268444	114.4868317	-0.41364089	14.47072697	1.140227199	-150.300507
F434	D	0	0.204315349	-40.6601868	-0.36542743	0.024063133	-0.96620387	-31.8308296
F434	D	1.25	0.204315349	-26.2195625	-0.36542743	0.024063133	-0.5094195	12.13372612
F434	D	2.5	0.204315349	2.352307796	-0.36542743	0.024063133	-0.05263523	27.27589035
F434	D	3.75	0.204315349	30.92417717	-0.36542743	0.024063133	0.404149085	6.252955914
F434	D	5	0.204315349	45.3647995	-0.36542743	0.024063133	0.860933423	-43.5923691
F434	L	0	0.845937967	-12.7889805	0.039227605	0.010237476	0.099974401	-11.1242199
F434	L	1.25	0.845937967	-8.88273048	0.039227605	0.010237476	0.050939888	3.234402418
F434	L	2.5	0.845937967	0.336019784	0.039227605	0.010237476	0.001905377	8.660732269
F434	L	3.75	0.845937967	9.55477047	0.039227605	0.010237476	-0.04712913	2.394352913
F434	L	5	0.845937967	13.46101952	0.039227605	0.010237476	-0.09616365	-12.8043184
F434	EX	0	-37.0170364	15.25057411	0.456632406	-0.00185473	1.182215095	40.4443512
F434	EX	1.25	-37.0170364	15.25057411	0.456632406	-0.00185473	0.611424625	21.38113213
F434	EX	2.5	-37.0170364	15.25057411	0.456632406	-0.00185473	0.040634081	2.317914486
F434	EX	3.75	-37.0170364	15.25057411	0.456632406	-0.00185473	-0.53015643	-16.7453022
F434	EX	5	-37.0170364	15.25057411	0.456632406	-0.00185473	-1.1009469	-35.8085213
F434	EY	0	-0.03798935	0.000795984	0.43289125	0.050182067	1.254612923	0.002214118
F434	EY	1.25	-0.03798935	0.000795984	0.43289125	0.050182067	0.71349889	0.001219138
F434	EY	2.5	-0.03798935	0.000795984	0.43289125	0.050182067	0.172384784	0.000224158
F434	EY	3.75	-0.03798935	0.000795984	0.43289125	0.050182067	-0.36872929	-0.00077082
F434	EY	5	-0.03798935	0.000795984	0.43289125	0.050182067	-0.90984339	-0.0017658
F434	COMB1	0	1.598679185	-69.2545929	-0.37574875	0.045255721	-0.99948561	-55.9957466
F434	COMB1	1.25	1.598679185	-45.6758423	-0.37574875	0.045255721	-0.52979958	19.73551559
F434	COMB1	2.5	1.598679185	3.360401154	-0.37574875	0.045255721	-0.06011367	46.58824158
F434	COMB1	3.75	1.598679185	52.39664459	-0.37574875	0.045255721	0.409572273	11.33451176
F434	COMB1	5	1.598679185	75.9753952	-0.37574875	0.045255721	0.879258275	-72.7977524
F434	COMB2	0	-37.8435974	-30.93713	0.237633169	0.042378798	0.635773599	4.934100628
F434	COMB2	1.25	-37.8435974	-14.5440054	0.237633169	0.042378798	0.338732183	35.88910675
F434	COMB2	2.5	-37.8435974	18.36036491	0.237633169	0.042378798	0.041690681	33.76692963
F434	COMB2	3.75	-37.8435974	51.26473236	0.237633169	0.042378798	-0.25535077	-10.0118065
F434	COMB2	5	-37.8435974	67.6578598	0.237633169	0.042378798	-0.55239218	-86.8677216
F434	COMB3	0	-11.2192535	-41.9169579	0.227032915	0.080598027	0.70671922	-24.184206
F434	COMB3	1.25	-11.2192535	-25.5238342	0.227032915	0.080598027	0.422928154	20.4955864
F434	COMB3	2.5	-11.2192535	7.380536079	0.227032915	0.080598027	0.139136955	32.09819412
F434	COMB3	3.75	-11.2192535	40.28490448	0.227032915	0.080598027	-0.1446542	2.044245243
F434	COMB3	5	-11.2192535	56.67802811	0.227032915	0.080598027	-0.42844528	-61.0868874
F435	D	0	1.176673055	-42.4615593	-0.41279668	-0.98326772	-1.00404608	-39.7449989
F435	D	1.25	1.176673055	-28.0209389	-0.41279668	-0.98326772	-0.48805019	6.471274376
F435	D	2.5	1.176673055	0.550932705	-0.41279668	-0.98326772	0.027945703	23.86515808
F435	D	3.75	1.176673055	29.12280273	-0.41279668	-0.98326772	0.543941557	5.093943119
F435	D	5	1.176673055	43.56342316	-0.41279668	-0.98326772	1.059937477	-42.4996643
F435	L	0	0.80721736	-12.9196415	0.017592968	-0.34515131	0.043351028	-12.3687029
F435	L	1.25	0.80721736	-9.01339149	0.017592968	-0.34515131	0.021359816	2.153245449
F435	L	2.5	0.80721736	0.205358639	0.017592968	-0.34515131	-0.00063139	7.742901802
F435	L	3.75	0.80721736	9.424108505	0.017592968	-0.34515131	-0.0226226	1.639849067
F435	L	5	0.80721736	13.33035946	0.017592968	-0.34515131	-0.04461382	-13.3954964
F435	EX	0	-28.3014412	13.57589436	0.277229697	0.055482108	0.748124778	33.67307663
F435	EX	1.25	-28.3014412	13.57589436	0.277229697	0.055482108	0.401587665	16.70320702
F435	EX	2.5	-28.3014412	13.57589436	0.277229697	0.055482108	0.055050533	-0.26666036

F435	EX	3.75	-28.3014412	13.57589436	0.277229697	0.055482108	-0.29148659	-17.2365284
F435	EX	5	-28.3014412	13.57589436	0.277229697	0.055482108	-0.63802373	-34.206398
F435	EY	0	-0.08809841	-0.00050396	1.423623323	0.106085055	3.497661591	-0.00141189
F435	EY	1.25	-0.08809841	-0.00050396	1.423623323	0.106085055	1.718132377	-0.00078193
F435	EY	2.5	-0.08809841	-0.00050396	1.423623323	0.106085055	-0.06139682	-0.00015198
F435	EY	3.75	-0.08809841	-0.00050396	1.423623323	0.106085055	-1.84092617	0.000477977
F435	EY	5	-0.08809841	-0.00050396	1.423623323	0.106085055	-3.6204555	0.001107931
F435	COMB1	0	2.703555346	-71.6252975	-0.46720728	-1.73216343	-1.13549364	-67.4839249
F435	COMB1	1.25	2.703555346	-48.0465508	-0.46720728	-1.73216343	-0.55148453	11.21072197
F435	COMB1	2.5	2.703555346	0.989693046	-0.46720728	-1.73216343	0.032524616	41.02683258
F435	COMB1	3.75	2.703555346	50.02593613	-0.46720728	-1.73216343	0.616533697	8.73649025
F435	COMB1	5	2.703555346	73.60468292	-0.46720728	-1.73216343	1.200542808	-72.4323883
F435	COMB2	0	-27.8299637	-34.6034317	0.307479382	-1.050313	0.835479796	-10.7772036
F435	COMB2	1.25	-27.8299637	-18.2103119	0.307479382	-1.050313	0.451130599	24.76068306
F435	COMB2	2.5	-27.8299637	14.69405937	0.307479382	-1.050313	0.066781402	27.22138786
F435	COMB2	3.75	-27.8299637	47.59842682	0.307479382	-1.050313	-0.31756783	-11.9744644
F435	COMB2	5	-27.8299637	63.99155045	0.307479382	-1.050313	-0.70191705	-84.2474976
F435	COMB3	0	-7.51767731	-44.3784447	1.154237151	-1.01228762	2.86761117	-35.0228539
F435	COMB3	1.25	-7.51767731	-27.9853268	1.154237151	-1.01228762	1.42481482	12.73379993
F435	COMB3	2.5	-7.51767731	4.919044971	1.154237151	-1.01228762	-0.01798165	27.41327286
F435	COMB3	3.75	-7.51767731	37.82341385	1.154237151	-1.01228762	-1.46077812	0.436187774
F435	COMB3	5	-7.51767731	54.21653748	1.154237151	-1.01228762	-2.90357471	-59.6180801
F436	D	0	-0.4187516	-42.8933716	0.001028194	-0.00063028	-0.25287393	-43.7625694
F436	D	1.25	-0.4187516	-28.4527493	0.001028194	-0.00063028	-0.25415918	2.993469715
F436	D	2.5	-0.4187516	0.119121514	0.001028194	-0.00063028	-0.25544444	20.9271183
F436	D	3.75	-0.4187516	28.69099045	0.001028194	-0.00063028	-0.25672966	2.695665836
F436	D	5	-0.4187516	43.13161469	0.001028194	-0.00063028	-0.25801492	-44.3581772
F436	L	0	-0.39345211	-12.9606543	9.66232E-05	0.008374959	0.038728338	-13.5308094
F436	L	1.25	-0.39345211	-9.05440521	9.66232E-05	0.008374959	0.038607556	1.042405009
F436	L	2.5	-0.39345211	0.164345682	9.66232E-05	0.008374959	0.038486779	6.683327675
F436	L	3.75	-0.39345211	9.383095741	9.66232E-05	0.008374959	0.038366001	0.631540835
F436	L	5	-0.39345211	13.28934574	9.66232E-05	0.008374959	0.038245223	-14.3525381
F436	EX	0	-21.0723934	13.81697178	0.757713497	-0.06411308	1.987476349	34.56661987
F436	EX	1.25	-21.0723934	13.81697178	0.757713497	-0.06411308	1.040334463	17.29540634
F436	EX	2.5	-21.0723934	13.81697178	0.757713497	-0.06411308	0.093192503	0.024190335
F436	EX	3.75	-21.0723934	13.81697178	0.757713497	-0.06411308	-0.85394943	-17.2470245
F436	EX	5	-21.0723934	13.81697178	0.757713497	-0.06411308	-1.80109143	-34.5182419
F436	EY	0	-0.12450327	5.62016E-07	-1.7548E-05	2.26564E-06	-0.35387865	0.000930917
F436	EY	1.25	-0.12450327	5.62016E-07	-1.7548E-05	2.26564E-06	-0.35385668	0.000930215
F436	EY	2.5	-0.12450327	5.62016E-07	-1.7548E-05	2.26564E-06	-0.35383475	0.000929512
F436	EY	3.75	-0.12450327	5.62016E-07	-1.7548E-05	2.26564E-06	-0.35381284	0.00092881
F436	EY	5	-0.12450327	5.62016E-07	-1.7548E-05	2.26564E-06	-0.35379091	0.000928107
F436	COMB1	0	-1.13202524	-72.2090912	0.00138843	0.012643593	-0.24148338	-74.1643829
F436	COMB1	1.25	-1.13202524	-48.6303482	0.00138843	0.012643593	-0.24321893	5.260011673
F436	COMB1	2.5	-1.13202524	0.405898899	0.00138843	0.012643593	-0.24495447	35.80586624
F436	COMB1	3.75	-1.13202524	49.44214249	0.00138843	0.012643593	-0.24668999	4.245264053
F436	COMB1	5	-1.13202524	73.02088928	0.00138843	0.012643593	-0.24842553	-76.1938705
F436	COMB2	0	-22.4127731	-34.8200798	0.785337985	-0.06438001	1.692248106	-14.4361601
F436	COMB2	1.25	-22.4127731	-18.4269581	0.785337985	-0.06438001	0.710575521	21.37253761
F436	COMB2	2.5	-22.4127731	14.47741222	0.785337985	-0.06438001	-0.27109703	24.10405159
F436	COMB2	3.75	-22.4127731	47.38178253	0.785337985	-0.06438001	-1.25276959	-14.8209934
F436	COMB2	5	-22.4127731	63.77490616	0.785337985	-0.06438001	-2.23444223	-86.8232193
F436	COMB3	0	-7.33215904	-44.7682991	0.239771381	-0.01821693	0.001164286	-39.3234406
F436	COMB3	1.25	-7.33215904	-28.3751774	0.239771381	-0.01821693	-0.29854992	8.920530319
F436	COMB3	2.5	-7.33215904	4.529192924	0.239771381	-0.01821693	-0.59826416	24.08731842
F436	COMB3	3.75	-7.33215904	37.43356323	0.239771381	-0.01821693	-0.89797843	-2.40245318
F436	COMB3	5	-7.33215904	53.82668686	0.239771381	-0.01821693	-1.19769263	-61.9694061
F437	D	0	0.997591197	-43.2433548	0.413307697	0.984022439	1.061136246	-41.8119698
F437	D	1.25	0.997591197	-28.8027306	0.413307697	0.984022439	0.544501543	5.381549835
F437	D	2.5	0.997591197	-0.23086172	0.413307697	0.984022439	0.027866915	23.75267601
F437	D	3.75	0.997591197	28.34100914	0.413307697	0.984022439	-0.48876774	5.958703995
F437	D	5	0.997591197	42.78163147	0.413307697	0.984022439	-1.00540245	-40.6576614
F437	L	0	0.785684466	-13.4892406	-0.01633889	0.337504983	-0.04125943	-13.8314447
F437	L	1.25	0.785684466	-9.58298969	-0.01633889	0.337504983	-0.02083582	1.402501941
F437	L	2.5	0.785684466	-0.36424005	-0.01633889	0.337504983	-0.00041221	7.704156399
F437	L	3.75	0.785684466	8.854510307	-0.01633889	0.337504983	0.020011401	2.313102245
F437	L	5	0.785684466	12.76076031	-0.01633889	0.337504983	0.040435009	-12.0102444
F437	EX	0	-13.1848459	13.48165512	0.076847307	0.054527108	0.116027422	34.00227737
F437	EX	1.25	-13.1848459	13.48165512	0.076847307	0.054527108	0.019968277	17.15021133
F437	EX	2.5	-13.1848459	13.48165512	0.076847307	0.054527108	-0.07609087	0.298142016
F437	EX	3.75	-13.1848459	13.48165512	0.076847307	0.054527108	-0.17215002	-16.5539265
F437	EX	5	-13.1848459	13.48165512	0.076847307	0.054527108	-0.26820916	-33.4059944
F437	EY	0	-0.08810265	0.000505113	-1.42361367	-0.10608725	-3.62042522	0.001110836
F437	EY	1.25	-0.08810265	0.000505113	-1.42361367	-0.10608725	-1.84090817	0.000479445
F437	EY	2.5	-0.08810265	0.000505113	-1.42361367	-0.10608725	-0.06139105	-0.00015195
F437	EY	3.75	-0.08810265	0.000505113	-1.42361367	-0.10608725	1.718126059	-0.00078334
F437	EY	5	-0.08810265	0.000505113	-1.42361367	-0.10608725	3.497643232	-0.00141473
F437	COMB1	0	2.454204559	-73.4748077	0.469827026	1.720834851	1.207348466	-72.3046722
F437	COMB1	1.25	2.454204559	-49.8960609	0.469827026	1.720834851	0.620064557	8.701863289
F437	COMB1	2.5	2.454204559	-0.85981816	0.469827026	1.720834851	0.032780763	40.82986069
F437	COMB1	3.75	2.454204559	48.17642593	0.469827026	1.720834851	-0.55450308	10.851408
F437	COMB1	5	2.454204559	71.75517273	0.469827026	1.720834851	-1.14178693	-68.0055847
F437	COMB2	0	-12.3791065	-35.7009621	0.05992499	1.162555695	0.080850802	-13.0667648
F437	COMB2	1.25	-12.3791065	-19.3078384	0.05992499	1.162555695	0.005944417	23.84303474

F437	COMB2	2.5	-12.3791065	13.59653091	0.05992499	1.162555695	-0.06896182	27.67564774
F437	COMB2	3.75	-12.3791065	46.50090027	0.05992499	1.162555695	-0.1438681	-10.1482944
F437	COMB2	5	-12.3791065	62.89402771	0.05992499	1.162555695	-0.21877435	-81.0494232
F437	COMB3	0	-2.950773	-45.4073792	-1.04176116	1.045322061	-2.66370153	-37.5475883
F437	COMB3	1.25	-2.950773	-29.0142574	-1.04176116	1.045322061	-1.36150026	11.49523544
F437	COMB3	2.5	-2.950773	3.890111208	-1.04176116	1.045322061	-0.05929881	27.46087456
F437	COMB3	3.75	-2.950773	36.79448318	-1.04176116	1.045322061	1.242902517	1.769957066
F437	COMB3	5	-2.950773	53.18760681	-1.04176116	1.045322061	2.545104027	-56.9981461
F438	D	0	0.053890936	-45.7151375	0.366547555	-0.02404284	0.863645732	-44.5335312
F438	D	1.25	0.053890936	-31.2745132	0.366547555	-0.02404284	0.405461252	5.749714375
F438	D	2.5	0.053890936	-2.70264411	0.366547555	-0.02404284	-0.05272318	27.21056938
F438	D	3.75	0.053890936	25.86922646	0.366547555	-0.02404284	-0.51090759	12.50632477
F438	D	5	0.053890936	40.30984879	0.366547555	-0.02404284	-0.96909207	-31.0203094
F438	L	0	0.86092478	-13.3829374	-0.03803125	-0.01098112	-0.0933691	-12.5772238
F438	L	1.25	0.86092478	-9.47668743	-0.03803125	-0.01098112	-0.04583002	2.523843765
F438	L	2.5	0.86092478	-0.25793698	-0.03803125	-0.01098112	0.001709047	8.692619324
F438	L	3.75	0.86092478	8.960813522	-0.03803125	-0.01098112	0.049248114	3.16868639
F438	L	5	0.86092478	12.86706257	-0.03803125	-0.01098112	0.096787184	-11.2875385
F438	EX	0	-5.11692572	15.02458763	0.247217938	-0.00131144	0.605427444	35.335186
F438	EX	1.25	-5.11692572	15.02458763	0.247217938	-0.00131144	0.296405017	16.55444717
F438	EX	2.5	-5.11692572	15.02458763	0.247217938	-0.00131144	-0.01261741	-2.2262876
F438	EX	3.75	-5.11692572	15.02458763	0.247217938	-0.00131144	-0.32163984	-21.0070229
F438	EX	5	-5.11692572	15.02458763	0.247217938	-0.00131144	-0.63066226	-39.7877579
F438	EY	0	-0.03799112	-0.0007947	-0.43288675	-0.05018273	-0.90983325	-0.00176279
F438	EY	1.25	-0.03799112	-0.0007947	-0.43288675	-0.05018273	-0.36872479	-0.00076941
F438	EY	2.5	-0.03799112	-0.0007947	-0.43288675	-0.05018273	0.172383636	0.00022396
F438	EY	3.75	-0.03799112	-0.0007947	-0.43288675	-0.05018273	0.713492036	0.001217335
F438	EY	5	-0.03799112	-0.0007947	-0.43288675	-0.05018273	1.254600525	0.00221071
F438	COMB1	0	1.442148685	-76.2708664	0.379007041	-0.0464212	0.886984289	-73.563797
F438	COMB1	1.25	1.442148685	-52.6921158	0.379007041	-0.0464212	0.413225472	10.93780708
F438	COMB1	2.5	1.442148685	-3.65587211	0.379007041	-0.0464212	-0.06053334	46.56087494
F438	COMB1	3.75	1.442148685	45.38037109	0.379007041	-0.0464212	-0.53429216	20.07748795
F438	COMB1	5	1.442148685	68.9591217	0.379007041	-0.0464212	-1.00805092	-55.2844353
F438	COMB2	0	-4.9802084	-36.6663246	0.492406309	-0.04586893	1.217436671	-14.1506739
F438	COMB2	1.25	-4.9802084	-20.2731972	0.492406309	-0.04586893	0.601928771	23.96582222
F438	COMB2	2.5	-4.9802084	12.63117218	0.492406309	-0.04586893	-0.01357917	29.00513649
F438	COMB2	3.75	-4.9802084	45.53554153	0.492406309	-0.04586893	-0.62908709	-7.61210871
F438	COMB2	5	-4.9802084	61.92866516	0.492406309	-0.04586893	-1.24459493	-77.3065338
F438	COMB3	0	-1.32394552	-47.4846115	-0.00376234	-0.081809	0.112801485	-39.5933037
F438	COMB3	1.25	-1.32394552	-31.091486	-0.00376234	-0.081809	0.117504403	12.04605389
F438	COMB3	2.5	-1.32394552	1.812884331	-0.00376234	-0.081809	0.122207344	30.60822868
F438	COMB3	3.75	-1.32394552	34.71725464	-0.00376234	-0.081809	0.126910254	7.51384306
F438	COMB3	5	-1.32394552	51.11037827	-0.00376234	-0.081809	0.131613195	-48.6577225
F439	D	0	2.19670558	-74.7144623	-0.39220834	12.55859375	-0.96073586	-84.583107
F439	D	0.75	2.19670558	-62.3741417	-0.39220834	12.55859375	-0.66657948	-32.9410667
F439	D	1.5	2.19670558	-46.2931976	-0.39220834	12.55859375	-0.37242305	8.042996407
F439	D	2.25	2.19670558	-30.2122478	-0.39220834	12.55859375	-0.07826664	36.49876404
F439	D	3	2.19670558	-17.8719292	-0.39220834	12.55859375	0.215889782	54.29655075
F439	L	0	0.354226589	-11.6173601	0.081759736	4.475774765	0.167687356	-14.9082232
F439	L	0.75	0.354226589	-10.9142361	0.081759736	4.475774765	0.106367528	-6.37098026
F439	L	1.5	0.354226589	-8.80485916	0.081759736	4.475774765	0.045047697	1.111575007
F439	L	2.25	0.354226589	-6.69548321	0.081759736	4.475774765	-0.01627213	6.836316109
F439	L	3	0.354226589	-5.99235725	0.081759736	4.475774765	-0.07759197	11.50636768
F439	EX	0	-0.56005782	1.06880641	-1.04857326	-2.69157314	-1.42560828	1.833925605
F439	EX	0.75	-0.56005782	1.06880641	-1.04857326	-2.69157314	-0.63917798	1.032320261
F439	EX	1.5	-0.56005782	1.06880641	-1.04857326	-2.69157314	0.147252411	0.230715021
F439	EX	2.25	-0.56005782	1.06880641	-1.04857326	-2.69157314	0.933682799	-0.57089025
F439	EX	3	-0.56005782	1.06880641	-1.04857326	-2.69157314	1.720113158	-1.37249553
F439	EY	0	-22.0357475	10.93469048	-0.31062141	-0.0003111	-0.57639033	32.81308365
F439	EY	0.75	-22.0357475	10.93469048	-0.31062141	-0.0003111	-0.34342417	24.61206055
F439	EY	1.5	-22.0357475	10.93469048	-0.31062141	-0.0003111	-0.11045799	16.41103745
F439	EY	2.25	-22.0357475	10.93469048	-0.31062141	-0.0003111	0.122508198	8.210016251
F439	EY	3	-22.0357475	10.93469048	-0.31062141	-0.0003111	0.355474383	0.00899469
F439	COMB1	0	3.202809334	-108.245132	-0.33983445	22.23155212	-0.88458329	-125.35289
F439	COMB1	0.75	3.202809334	-92.3117447	-0.33983445	22.23155212	-0.62970734	-49.722847
F439	COMB1	1.5	3.202809334	-69.6396103	-0.33983445	22.23155212	-0.37483135	11.4301157
F439	COMB1	2.25	3.202809334	-46.9674721	-0.33983445	22.23155212	-0.11995538	54.73662186
F439	COMB1	3	3.202809334	-31.0340881	-0.33983445	22.23155212	0.134920597	83.56604767
F439	COMB2	0	-5.10279799	-77.5590134	-1.56918359	11.81051636	-2.61301875	-81.2741241
F439	COMB2	0.75	-5.10279799	-64.380188	-1.56918359	11.81051636	-1.43613052	-27.7737274
F439	COMB2	1.5	-5.10279799	-46.8307457	-1.56918359	11.81051636	-0.25924221	14.20355892
F439	COMB2	2.25	-5.10279799	-29.2812958	-1.56918359	11.81051636	0.91764605	42.47242737
F439	COMB2	3	-5.10279799	-16.1024761	-1.56918359	11.81051636	2.094534397	59.21818542
F439	COMB3	0	-20.8958302	-70.2915573	-1.04251754	13.74821949	-2.01022768	-58.4769325
F439	COMB3	0.75	-20.8958302	-57.1127319	-1.04251754	13.74821949	-1.22833908	-10.4271345
F439	COMB3	1.5	-20.8958302	-39.5632858	-1.04251754	13.74821949	-0.44645056	26.09955597
F439	COMB3	2.25	-20.8958302	-22.0138397	-1.04251754	13.74821949	0.335437983	48.91782761
F439	COMB3	3	-20.8958302	-8.83502007	-1.04251754	13.74821949	1.117326498	60.21299362
F440	D	0	2.214761257	-83.2521896	-0.24185255	-1.46346736	-0.60961604	-106.011253
F440	D	0.75	2.214761257	-76.5415726	-0.24185255	-1.46346736	-0.4282265	-45.6209793
F440	D	1.5	2.214761257	-62.3496819	-0.24185255	-1.46346736	-0.24683698	6.930845261
F440	D	2.25	2.214761257	-48.1578026	-0.24185255	-1.46346736	-0.06544747	47.90359497
F440	D	3	2.214761257	-41.4471741	-0.24185255	-1.46346736	0.115942031	81.03790283
F440	L	0	0.732378781	-24.9442883	0.067386225	-0.36391973	0.139393494	-32.5075531

F440	L	0.75	0.732378781	-23.5380363	0.067386225	-0.36391973	0.088853791	-14.1508913
F440	L	1.5	0.732378781	-19.3192825	0.067386225	-0.36391973	0.038314097	2.096394062
F440	L	2.25	0.732378781	-15.1005325	0.067386225	-0.36391973	-0.0122256	14.82804966
F440	L	3	0.732378781	-13.6942806	0.067386225	-0.36391973	-0.0627653	25.45032883
F440	EX	0	-0.56417638	-0.14775507	-0.56474388	-3.43453503	-0.77243489	0.009982799
F440	EX	0.75	-0.56417638	-0.14775507	-0.56474388	-3.43453503	-0.34887677	0.120799161
F440	EX	1.5	-0.56417638	-0.14775507	-0.56474388	-3.43453503	0.074681379	0.231615514
F440	EX	2.25	-0.56417638	-0.14775507	-0.56474388	-3.43453503	0.498239517	0.342431873
F440	EX	3	-0.56417638	-0.14775507	-0.56474388	-3.43453503	0.921797633	0.453248262
F440	EY	0	-21.5997562	10.56341171	-1.09250546	-4.0746E-05	-2.04776835	31.69988441
F440	EY	0.75	-21.5997562	10.56341171	-1.09250546	-4.0746E-05	-1.22838879	23.77732086
F440	EY	1.5	-21.5997562	10.56341171	-1.09250546	-4.0746E-05	-0.40900937	15.85475731
F440	EY	2.25	-21.5997562	10.56341171	-1.09250546	-4.0746E-05	0.410370111	7.93219471
F440	EY	3	-21.5997562	10.56341171	-1.09250546	-4.0746E-05	1.22974956	0.009631842
F440	COMB1	0	3.82951951	-139.813492	-0.1824051	-2.33843255	-0.50850964	-179.225586
F440	COMB1	0.75	3.82951951	-129.510742	-0.1824051	-2.33843255	-0.37170571	-77.3866043
F440	COMB1	1.5	3.82951951	-105.730469	-0.1824051	-2.33843255	-0.23490183	11.67124462
F440	COMB1	2.25	3.82951951	-81.9502106	-0.1824051	-2.33843255	-0.09809794	81.209198
F440	COMB1	3	3.82951951	-71.6474609	-0.1824051	-2.33843255	0.038705952	137.9660034
F440	COMB2	0	-4.83164692	-92.097702	-1.16136765	-5.2060318	-2.04070497	-111.555901
F440	COMB2	0.75	-4.83164692	-84.6085815	-1.16136765	-5.2060318	-1.16967881	-44.7446785
F440	COMB2	1.5	-4.83164692	-68.3781891	-1.16136765	-5.2060318	-0.29865262	13.17172241
F440	COMB2	2.25	-4.83164692	-52.1478119	-1.16136765	-5.2060318	0.572373569	57.82266998
F440	COMB2	3	-4.83164692	-44.6586838	-1.16136765	-5.2060318	1.443399787	93.57879639
F440	COMB3	0	-20.30126	-84.227211	-1.55774355	-2.73319674	-2.98966169	-88.2636719
F440	COMB3	0.75	-20.30126	-76.7380905	-1.55774355	-2.73319674	-1.82135332	-27.3553219
F440	COMB3	1.5	-20.30126	-60.5076981	-1.55774355	-2.73319674	-0.65304506	24.65820503
F440	COMB3	2.25	-20.30126	-44.2773209	-1.55774355	-2.73319674	0.51526314	63.40628052
F440	COMB3	3	-20.30126	-36.7881927	-1.55774355	-2.73319674	1.683571339	93.25953674
F441	D	0	1.707125545	-78.7249222	-0.36335716	0.750212014	-0.87119091	-91.7828445
F441	D	0.75	1.707125545	-72.0142975	-0.36335716	0.750212014	-0.59867293	-34.7880325
F441	D	1.5	1.707125545	-57.8224144	-0.36335716	0.750212014	-0.32615489	14.36834049
F441	D	2.25	1.707125545	-43.6305351	-0.36335716	0.750212014	-0.05363689	51.94563675
F441	D	3	1.707125545	-36.9199066	-0.36335716	0.750212014	0.218881115	81.68449402
F441	L	0	0.783588707	-23.4745255	0.056859054	0.205994368	0.127065212	-27.7081604
F441	L	0.75	0.783588707	-22.0682755	0.056859054	0.205994368	0.084420882	-10.4538202
F441	L	1.5	0.783588707	-17.8495235	0.056859054	0.205994368	0.041776571	4.691143036
F441	L	2.25	0.783588707	-13.6307707	0.056859054	0.205994368	-0.00086774	16.32047844
F441	L	3	0.783588707	-12.2245197	0.056859054	0.205994368	-0.04351205	25.84043503
F441	EX	0	-4.40792608	-0.04531647	-0.35519472	-3.33051276	-0.54972863	-0.32249799
F441	EX	0.75	-4.40792608	-0.04531647	-0.35519472	-3.33051276	-0.28333247	-0.28851062
F441	EX	1.5	-4.40792608	-0.04531647	-0.35519472	-3.33051276	-0.0169363	-0.25452325
F441	EX	2.25	-4.40792608	-0.04531647	-0.35519472	-3.33051276	0.249459878	-0.22053587
F441	EX	3	-4.40792608	-0.04531647	-0.35519472	-3.33051276	0.515856087	-0.1865485
F441	EY	0	-0.86611211	9.77449894	-0.79201227	-0.00012164	-1.50093758	29.3445015
F441	EY	0.75	-0.86611211	9.77449894	-0.79201227	-0.00012164	-0.90692806	22.01362419
F441	EY	1.5	-0.86611211	9.77449894	-0.79201227	-0.00012164	-0.31291851	14.68274689
F441	EY	2.25	-0.86611211	9.77449894	-0.79201227	-0.00012164	0.281091034	7.351867199
F441	EY	3	-0.86611211	9.77449894	-0.79201227	-0.00012164	0.875100613	0.020989465
F441	COMB1	0	3.302292585	-132.029144	-0.34505409	1.229845405	-0.84212476	-154.472473
F441	COMB1	0.75	3.302292585	-121.726402	-0.34505409	1.229845405	-0.58333409	-58.4717522
F441	COMB1	1.5	3.302292585	-97.9461365	-0.34505409	1.229845405	-0.32454336	24.74783707
F441	COMB1	2.25	3.302292585	-74.1658783	-0.34505409	1.229845405	-0.06575265	88.44753265
F441	COMB1	3	3.302292585	-63.863121	-0.34505409	1.229845405	0.193038061	139.3660889
F441	COMB2	0	-2.79571652	-87.0235748	-0.98072481	-2.59450841	-1.91648936	-96.1903229
F441	COMB2	0.75	-2.79571652	-79.5344543	-0.98072481	-2.59450841	-1.1809454	-33.1847038
F441	COMB2	1.5	-2.79571652	-63.3040695	-0.98072481	-2.59450841	-0.4454014	20.92610168
F441	COMB2	2.25	-2.79571652	-47.0736885	-0.98072481	-2.59450841	0.290142566	61.77145386
F441	COMB2	3	-2.79571652	-39.5845642	-0.98072481	-2.59450841	1.025686622	93.72199249
F441	COMB3	0	-0.2586022	-79.806694	-1.30711365	-0.19662845	-2.62387395	-74.3899155
F441	COMB3	0.75	-0.2586022	-72.3175735	-1.30711365	-0.19662845	-1.64353812	-16.7969608
F441	COMB3	1.5	-0.2586022	-56.0871849	-1.30711365	-0.19662845	-0.6632024	31.90117645
F441	COMB3	2.25	-0.2586022	-39.8568039	-1.30711365	-0.19662845	0.317133367	67.3338623
F441	COMB3	3	-0.2586022	-32.3676796	-1.30711365	-0.19662845	1.297469139	93.87173462
F442	D	0	1.727786183	-78.68293	0.355935276	-0.83224523	0.856418669	-91.7140579
F442	D	0.75	1.727786183	-71.9723129	0.355935276	-0.83224523	0.589467049	-34.7507286
F442	D	1.5	1.727786183	-57.7804298	0.355935276	-0.83224523	0.322515458	14.37415314
F442	D	2.25	1.727786183	-43.5885468	0.355935276	-0.83224523	0.055563871	51.91996002
F442	D	3	1.727786183	-36.8779182	0.355935276	-0.83224523	-0.21138772	81.62732697
F442	L	0	0.814736426	-23.6130333	-0.0610491	-0.16004243	-0.13700469	-27.9738579
F442	L	0.75	0.814736426	-22.2067833	-0.0610491	-0.16004243	-0.09121784	-10.6156368
F442	L	1.5	0.814736426	-17.9880295	-0.0610491	-0.16004243	-0.04543098	4.633208275
F442	L	2.25	0.814736426	-13.7692785	-0.0610491	-0.16004243	0.000355864	16.36642265
F442	L	3	0.814736426	-12.3630266	-0.0610491	-0.16004243	0.046142712	25.99026299
F442	EX	0	4.30045414	0.038692538	-0.32368702	-3.3172164	-0.7278856	0.308410734
F442	EX	0.75	4.30045414	0.038692538	-0.32368702	-3.3172164	-0.48512024	0.279391319
F442	EX	1.5	4.30045414	0.038692538	-0.32368702	-3.3172164	-0.24235485	0.250371873
F442	EX	2.25	4.30045414	0.038692538	-0.32368702	-3.3172164	0.000410529	0.221352458
F442	EX	3	4.30045414	0.038692538	-0.32368702	-3.3172164	0.243175909	0.192333043
F442	EY	0	-0.86624008	9.774481773	0.792028308	0.000121294	1.500968575	29.34445381
F442	EY	0.75	-0.86624008	9.774481773	0.792028308	0.000121294	0.906947017	22.01358604
F442	EY	1.5	-0.86624008	9.774481773	0.792028308	0.000121294	0.312925398	14.68272114
F442	EY	2.25	-0.86624008	9.774481773	0.792028308	0.000121294	-0.28109616	7.351855278
F442	EY	3	-0.86624008	9.774481773	0.792028308	0.000121294	-0.87511772	0.020989873

F444	COMB3	3	-19.9245758	-9.39001179	0.813904941	-15.1747942	-0.75977457	69.94787598
F445	D	0	-0.50450188	-35.7823601	-0.00182344	0.00063837	-0.00108016	-25.0581818
F445	D	1.25	-0.50450188	-23.1417389	-0.00182344	0.00063837	0.001199144	13.93409443
F445	D	2.5	-0.50450188	3.630130291	-0.00182344	0.00063837	0.003478448	26.35398102
F445	D	3.75	-0.50450188	30.40200043	-0.00182344	0.00063837	0.005757752	4.858767509
F445	D	5	-0.50450188	43.04262161	-0.00182344	0.00063837	0.008037055	-43.2088356
F445	L	0	0.121859387	-12.0587454	-0.00386942	0.000333629	-0.01021377	-8.95304012
F445	L	1.25	0.121859387	-8.15249538	-0.00386942	0.000333629	-0.00537699	4.492788315
F445	L	2.5	0.121859387	1.066254854	-0.00386942	0.000333629	-0.0005402	9.006323814
F445	L	3.75	0.121859387	10.28500557	-0.00386942	0.000333629	0.004296576	1.827151299
F445	L	5	0.121859387	14.19125462	-0.00386942	0.000333629	0.009133357	-14.2843142
F445	EX	0	-1.88658404	1.821590662	0.126723498	-0.00056611	0.318740964	5.326190948
F445	EX	1.25	-1.88658404	1.821590662	0.126723498	-0.00056611	0.160336569	3.049202919
F445	EX	2.5	-1.88658404	1.821590662	0.126723498	-0.00056611	0.001932208	0.772214293
F445	EX	3.75	-1.88658404	1.821590662	0.126723498	-0.00056611	-0.15647216	-1.50477409
F445	EX	5	-1.88658404	1.821590662	0.126723498	-0.00056611	-0.31487653	-3.7817626
F445	EY	0	0.012556013	6.60888E-05	0.284431338	-0.0075592	0.721041024	0.000147831
F445	EY	1.25	0.012556013	6.60888E-05	0.284431338	-0.0075592	0.365501821	6.52204E-05
F445	EY	2.5	0.012556013	6.60888E-05	0.284431338	-0.0075592	0.00996263	-1.7391E-05
F445	EY	3.75	0.012556013	6.60888E-05	0.284431338	-0.0075592	-0.34557655	-0.0001
F445	EY	5	0.012556013	6.60888E-05	0.284431338	-0.0075592	-0.70111573	-0.00018261
F445	COMB1	0	-0.41042724	-62.2328262	-0.00837921	0.001299849	-0.01763822	-44.3946838
F445	COMB1	1.25	-0.41042724	-40.8140793	-0.00837921	0.001299849	-0.0071642	23.90937424
F445	COMB1	2.5	-0.41042724	6.062164307	-0.00837921	0.001299849	0.003309809	46.03489685
F445	COMB1	3.75	-0.41042724	52.9384079	-0.00837921	0.001299849	0.013783824	8.753962517
F445	COMB1	5	-0.41042724	74.35715485	-0.00837921	0.001299849	0.024257837	-74.7055054
F445	COMB2	0	-2.44000053	-39.4846191	0.217621207	-0.00219169	0.55267328	-23.6186447
F445	COMB2	1.25	-2.44000053	-24.9814949	0.217621207	-0.00219169	0.280646771	19.20197296
F445	COMB2	2.5	-2.44000053	6.032874107	0.217621207	-0.00219169	0.00862027	31.30790901
F445	COMB2	3.75	-2.44000053	37.04724503	0.217621207	-0.00219169	-0.26340625	4.119785786
F445	COMB2	5	-2.44000053	51.55036545	0.217621207	-0.00219169	-0.53543276	-53.78302
F445	COMB3	0	-1.07243145	-40.7961159	0.335437298	-0.00734011	0.853144944	-27.4533939
F445	COMB3	1.25	-1.07243145	-26.2929916	0.335437298	-0.00734011	0.433848292	17.00659561
F445	COMB3	2.5	-1.07243145	4.721377373	0.335437298	-0.00734011	0.014551613	30.75190163
F445	COMB3	3.75	-1.07243145	35.73574829	0.335437298	-0.00734011	-0.40474504	5.203149796
F445	COMB3	5	-1.07243145	50.23886871	0.335437298	-0.00734011	-0.82404172	-51.0602837
F446	D	0	-0.87972349	-39.7896004	-0.03023931	-0.00078589	-0.07983908	-40.2865639
F446	D	1.25	-0.87972349	-27.1489754	-0.03023931	-0.00078589	-0.04203995	3.714758873
F446	D	2.5	-0.87972349	-0.37710631	-0.03023931	-0.00078589	-0.00424081	21.14369202
F446	D	3.75	-0.87972349	26.39476395	-0.03023931	-0.00078589	0.03355832	4.657524586
F446	D	5	-0.87972349	39.03538513	-0.03023931	-0.00078589	0.071357459	-38.4010315
F446	L	0	0.200944096	-13.229599	-0.01128567	-0.00096382	-0.027802	-13.5622225
F446	L	1.25	0.200944096	-9.323349	-0.01128567	-0.00096382	-0.01369491	1.347172379
F446	L	2.5	0.200944096	-0.10459865	-0.01128567	-0.00096382	0.000412179	7.324275494
F446	L	3.75	0.200944096	9.114151001	-0.01128567	-0.00096382	0.014519269	1.608668923
F446	L	5	0.200944096	13.02040195	-0.01128567	-0.00096382	0.028626358	-13.0392294
F446	EX	0	-2.59360433	1.262550831	0.09689828	-0.00281427	0.246132478	3.062548637
F446	EX	1.25	-2.59360433	1.262550831	0.09689828	-0.00281427	0.125009641	1.484360099
F446	EX	2.5	-2.59360433	1.262550831	0.09689828	-0.00281427	0.003886793	-0.09382862
F446	EX	3.75	-2.59360433	1.262550831	0.09689828	-0.00281427	-0.11723605	-1.67201722
F446	EX	5	-2.59360433	1.262550831	0.09689828	-0.00281427	-0.23835891	-3.25020599
F446	EY	0	-0.00039638	-0.0001216	0.699885249	-0.01580963	1.744225264	-0.00031975
F446	EY	1.25	-0.00039638	-0.0001216	0.699885249	-0.01580963	0.869368613	-0.00016776
F446	EY	2.5	-0.00039638	-0.0001216	0.699885249	-0.01580963	-0.00548802	-1.5762E-05
F446	EY	3.75	-0.00039638	-0.0001216	0.699885249	-0.01580963	-0.88034463	0.000136233
F446	EY	5	-0.00039638	-0.0001216	0.699885249	-0.01580963	-1.75520134	0.000288227
F446	COMB1	0	-0.73415762	-68.9148788	-0.05434424	-0.00248518	-0.1402901	-70.0434341
F446	COMB1	1.25	-0.73415762	-47.4961281	-0.05434424	-0.00248518	-0.07235979	6.613186359
F446	COMB1	2.5	-0.73415762	-0.61988539	-0.05434424	-0.00248518	-0.00442949	37.09127045
F446	COMB1	3.75	-0.73415762	46.2563591	-0.05434424	-0.00248518	0.063500814	8.162899971
F446	COMB1	5	-0.73415762	67.67510986	-0.05434424	-0.00248518	0.131431118	-66.9440079
F446	COMB2	0	-3.54491758	-44.6397018	0.285447329	-0.00902159	0.711589456	-43.4033546
F446	COMB2	1.25	-3.54491758	-30.1365776	0.285447329	-0.00902159	0.354780257	5.861115932
F446	COMB2	2.5	-3.54491758	0.877791643	0.285447329	-0.00902159	-0.00202891	24.41090584
F446	COMB2	3.75	-3.54491758	31.89216042	0.285447329	-0.00902159	-0.35883808	3.666636467
F446	COMB2	5	-3.54491758	46.39528275	0.285447329	-0.00902159	-0.71564728	-47.7923126
F446	COMB3	0	-1.67781377	-45.5488281	0.730096221	-0.01861539	1.816379666	-45.6086235
F446	COMB3	1.25	-1.67781377	-31.0457039	0.730096221	-0.01861539	0.903759241	4.792253494
F446	COMB3	2.5	-1.67781377	-0.03133436	0.730096221	-0.01861539	-0.0088611	24.47845078
F446	COMB3	3.75	-1.67781377	30.98303413	0.730096221	-0.01861539	-0.92148143	4.870588779
F446	COMB3	5	-1.67781377	45.48615646	0.730096221	-0.01861539	-1.8341018	-45.4519539
F447	D	0	-1.3868984	-39.4077377	0.001204793	4.44346E-05	0.027315175	-39.036026
F447	D	1.25	-1.3868984	-26.7671165	0.001204793	4.44346E-05	0.025809182	4.487970829
F447	D	2.5	-1.3868984	0.004754207	0.001204793	4.44346E-05	0.02430319	21.4395771
F447	D	3.75	-1.3868984	26.77662468	0.001204793	4.44346E-05	0.022797199	4.476085186
F447	D	5	-1.3868984	39.41724777	0.001204793	4.44346E-05	0.021291208	-39.0597992
F447	L	0	0.261246383	-13.0696163	0.000840452	0.000239535	0.000432835	-13.1720791
F447	L	1.25	0.261246383	-9.16336632	0.000840452	0.000239535	-0.00061773	1.537338972
F447	L	2.5	0.261246383	0.055383574	0.000840452	0.000239535	-0.0016683	7.314464092
F447	L	3.75	0.261246383	9.274133682	0.000840452	0.000239535	-0.00271886	1.398880005
F447	L	5	0.261246383	13.18038464	0.000840452	0.000239535	-0.00376943	-13.4489965
F447	EX	0	-2.40688586	1.31224227	0.345905393	0.000806314	0.858024538	3.283001423
F447	EX	1.25	-2.40688586	1.31224227	0.345905393	0.000806314	0.425642729	1.642698646
F447	EX	2.5	-2.40688586	1.31224227	0.345905393	0.000806314	-0.00673903	0.002395586

F447	EX	3.75	-2.40688586	1.31224227	0.345905393	0.000806314	-0.4391208	-1.63790739
F447	EX	5	-2.40688586	1.31224227	0.345905393	0.000806314	-0.87150258	-3.2782104
F447	EY	0	-0.01313783	3.71974E-08	-8.2588E-06	-3.3279E-07	-0.01799988	0.000164243
F447	EY	1.25	-0.01313783	3.71974E-08	-8.2588E-06	-3.3279E-07	-0.01798956	0.000164196
F447	EY	2.5	-0.01313783	3.71974E-08	-8.2588E-06	-3.3279E-07	-0.01797923	0.00016415
F447	EY	3.75	-0.01313783	3.71974E-08	-8.2588E-06	-3.3279E-07	-0.01796891	0.000164103
F447	EY	5	-0.01313783	3.71974E-08	-8.2588E-06	-3.3279E-07	-0.01795859	0.000164057
F447	COMB1	0	-1.24628377	-68.2006683	0.002790475	0.000436577	0.033470746	-67.9185562
F447	COMB1	1.25	-1.24628377	-46.7819252	0.002790475	0.000436577	0.029982651	7.84530735
F447	COMB1	2.5	-1.24628377	0.09431877	0.002790475	0.000436577	0.026494557	37.43063354
F447	COMB1	3.75	-1.24628377	46.97056198	0.002790475	0.000436577	0.023006463	7.609509945
F447	COMB1	5	-1.24628377	68.38931274	0.002790475	0.000436577	0.019518368	-68.390152
F447	COMB2	0	-3.86921597	-44.1368828	0.359539241	0.00095654	0.911202669	-41.7390747
F447	COMB2	1.25	-3.86921597	-29.6337624	0.359539241	0.00095654	0.461778581	6.896875858
F447	COMB2	2.5	-3.86921597	1.380608559	0.359539241	0.00095654	0.012354486	24.81814194
F447	COMB2	3.75	-3.86921597	32.39497757	0.359539241	0.00095654	-0.43706959	3.445354223
F447	COMB2	5	-3.86921597	46.89810181	0.359539241	0.00095654	-0.88649374	-48.6421165
F447	COMB3	0	-2.14591432	-45.0816956	0.110481299	0.000375749	0.280195117	-44.1027145
F447	COMB3	1.25	-2.14591432	-30.578577	0.110481299	0.000375749	0.14209348	5.714253426
F447	COMB3	2.5	-2.14591432	0.435794085	0.110481299	0.000375749	0.00399185	24.81653786
F447	COMB3	3.75	-2.14591432	31.45016479	0.110481299	0.000375749	-0.13410978	4.624768257
F447	COMB3	5	-2.14591432	45.95328903	0.110481299	0.000375749	-0.27221143	-46.2816849
F448	D	0	-0.88525671	-38.9472122	0.032055102	0.00076723	0.075879171	-38.2640839
F448	D	1.25	-0.88525671	-26.3065891	0.032055102	0.00076723	0.035810299	4.684256077
F448	D	2.5	-0.88525671	0.465280831	0.032055102	0.00076723	-0.00425858	21.06020355
F448	D	3.75	-0.88525671	27.2371521	0.032055102	0.00076723	-0.04432746	3.521053791
F448	D	5	-0.88525671	39.87777328	0.032055102	0.00076723	-0.08439634	-40.5904884
F448	L	0	0.201089889	-13.1565933	0.013397315	0.000866195	0.03389011	-13.4169769
F448	L	1.25	0.201089889	-9.25034332	0.013397315	0.000866195	0.017143464	1.401161432
F448	L	2.5	0.201089889	-0.03159319	0.013397315	0.000866195	0.00039682	7.287007332
F448	L	3.75	0.201089889	9.187156677	0.013397315	0.000866195	-0.01634982	1.480144382
F448	L	5	0.201089889	13.09340763	0.013397315	0.000866195	-0.03309647	-13.2590113
F448	EX	0	-1.95230258	1.254988551	0.106893681	-0.00273965	0.267129749	3.232400894
F448	EX	1.25	-1.95230258	1.254988551	0.106893681	-0.00273965	0.133512646	1.663665056
F448	EX	2.5	-1.95230258	1.254988551	0.106893681	-0.00273965	-0.00010446	0.094929375
F448	EX	3.75	-1.95230258	1.254988551	0.106893681	-0.00273965	-0.13372156	-1.47380626
F448	EX	5	-1.95230258	1.254988551	0.106893681	-0.00273965	-0.26733866	-3.04254198
F448	EY	0	-0.00039553	0.000121659	-0.69988227	0.015809953	-1.75519359	0.000288393
F448	EY	1.25	-0.00039553	0.000121659	-0.69988227	0.015809953	-0.8803407	0.000136318
F448	EY	2.5	-0.00039553	0.000121659	-0.69988227	0.015809953	-0.00548788	-1.5756E-05
F448	EY	3.75	-0.00039553	0.000121659	-0.69988227	0.015809953	0.869364977	-0.00016783
F448	EY	5	-0.00039553	0.000121659	-0.69988227	0.015809953	1.744217753	-0.0003199
F448	COMB1	0	-0.74056423	-67.7872086	0.059901826	0.002306587	0.145279184	-67.3840637
F448	COMB1	1.25	-0.74056423	-46.3684578	0.059901826	0.002306587	0.0704019	7.862965584
F448	COMB1	2.5	-0.74056423	0.507787883	0.059901826	0.002306587	-0.00447538	36.93145752
F448	COMB1	3.75	-0.74056423	47.3840332	0.059901826	0.002306587	-0.07935267	6.593495846
F448	COMB1	5	-0.74056423	68.80278015	0.059901826	0.002306587	-0.15422995	-69.9230042
F448	COMB2	0	-2.88693404	-43.7399483	-0.07194994	0.003223039	-0.18605816	-41.0580101
F448	COMB2	1.25	-2.88693404	-29.2368259	-0.07194994	0.003223039	-0.09612073	7.081770897
F448	COMB2	2.5	-2.88693404	1.777544498	-0.07194994	0.003223039	-0.00618331	24.50686836
F448	COMB2	3.75	-2.88693404	32.79191589	-0.07194994	0.003223039	0.083754122	2.637909651
F448	COMB2	5	-2.88693404	47.29503632	-0.07194994	0.003223039	0.173691541	-49.9457359
F448	COMB3	0	-1.48156679	-44.6434517	-0.66332686	0.016815903	-1.66845894	-43.385128
F448	COMB3	1.25	-1.48156679	-30.1403294	-0.66332686	0.016815903	-0.83930027	5.884032249
F448	COMB3	2.5	-1.48156679	0.874042153	-0.66332686	0.016815903	-0.01014169	24.43850899
F448	COMB3	3.75	-1.48156679	31.88841248	-0.66332686	0.016815903	0.819016874	3.698926926
F448	COMB3	5	-1.48156679	46.3915329	-0.66332686	0.016815903	1.648175478	-47.7553406
F449	D	0	-0.50901568	-43.2471046	0.003646448	-0.00053169	0.012553545	-43.7648277
F449	D	1.25	-0.50901568	-30.6064816	0.003646448	-0.00053169	0.007995484	4.55837822
F449	D	2.5	-0.50901568	-3.83460999	0.003646448	-0.00053169	0.003437424	26.30918884
F449	D	3.75	-0.50901568	22.93725967	0.003646448	-0.00053169	-0.00112064	14.14490318
F449	D	5	-0.50901568	35.57788086	0.003646448	-0.00053169	-0.0056787	-24.5917759
F449	L	0	0.123096786	-14.2050123	0.006065588	-0.00029314	0.014578074	-14.2799025
F449	L	1.25	0.123096786	-10.2987614	0.006065588	-0.00029314	0.00699609	1.848758936
F449	L	2.5	0.123096786	-1.08001149	0.006065588	-0.00029314	-0.0005859	9.045127869
F449	L	3.75	0.123096786	8.138738632	0.006065588	-0.00029314	-0.00816788	4.548788071
F449	L	5	0.123096786	12.04498863	0.006065588	-0.00029314	-0.01574986	-8.87984467
F449	EX	0	-1.04977226	1.793706775	0.134293824	-0.00055088	0.331467301	3.731885195
F449	EX	1.25	-1.04977226	1.793706775	0.134293824	-0.00055088	0.163599998	1.489751935
F449	EX	2.5	-1.04977226	1.793706775	0.134293824	-0.00055088	-0.00426729	-0.75238168
F449	EX	3.75	-1.04977226	1.793706775	0.134293824	-0.00055088	-0.17213458	-2.99451518
F449	EX	5	-1.04977226	1.793706775	0.134293824	-0.00055088	-0.34000188	-5.23664904
F449	EY	0	0.012556287	-6.5992E-05	-0.28442827	0.007559304	-0.70110804	-0.00018241
F449	EY	1.25	0.012556287	-6.5992E-05	-0.28442827	0.007559304	-0.34557268	-9.9921E-05
F449	EY	2.5	0.012556287	-6.5992E-05	-0.28442827	0.007559304	0.009962658	-1.7431E-05
F449	EY	3.75	0.012556287	-6.5992E-05	-0.28442827	0.007559304	0.365498006	6.50583E-05
F449	EY	5	0.012556287	-6.5992E-05	-0.28442827	0.007559304	0.721033335	0.000147548
F449	COMB1	0	-0.41386399	-74.6245422	0.014080678	-0.00110706	0.038389172	-75.3656311
F449	COMB1	1.25	-0.41386399	-53.2057953	0.014080678	-0.00110706	0.020788325	8.428068161
F449	COMB1	2.5	-0.41386399	-6.32955027	0.014080678	-0.00110706	0.003187477	46.04323196
F449	COMB1	3.75	-0.41386399	40.54669571	0.014080678	-0.00110706	-0.01441337	24.2519455
F449	COMB1	5	-0.41386399	61.96543884	0.014080678	-0.00110706	-0.03201422	-43.7178802
F449	COMB2	0	-1.57825005	-48.0275726	0.055138636	0.001160399	0.139992937	-46.5887947
F449	COMB2	1.25	-1.57825005	-33.5244484	0.055138636	0.001160399	0.071069628	6.910518169

F449	COMB2	2.5	-1.57825005	-2.51007843	0.055138636	0.001160399	0.002146325	29.69514275
F449	COMB2	3.75	-1.57825005	28.50429153	0.055138636	0.001160399	-0.06677697	13.18571377
F449	COMB2	5	-1.57825005	43.00741196	0.055138636	0.001160399	-0.13570027	-34.0383987
F449	COMB3	0	-0.81318516	-49.319088	-0.2506077	0.007113122	-0.61397791	-49.2758827
F449	COMB3	1.25	-0.81318516	-34.8159676	-0.2506077	0.007113122	-0.30071828	5.837822914
F449	COMB3	2.5	-0.81318516	-3.80159569	-0.2506077	0.007113122	0.012541332	30.23684502
F449	COMB3	3.75	-0.81318516	27.21277428	-0.2506077	0.007113122	0.325800955	15.34181309
F449	COMB3	5	-0.81318516	41.71589661	-0.2506077	0.007113122	0.639060616	-30.2679043
F450	D	0	2.194882154	17.91043091	0.112293527	-12.4995899	0.216969952	54.2959137
F450	D	0.75	2.194882154	30.25074196	0.112293527	-12.4995899	0.132749826	36.46926498
F450	D	1.5	2.194882154	46.33167267	0.112293527	-12.4995899	0.048529718	7.984659672
F450	D	2.25	2.194882154	62.41260529	0.112293527	-12.4995899	-0.0356904	-33.0282211
F450	D	3	2.194882154	74.75291443	0.112293527	-12.4995899	-0.11991052	-84.6990662
F450	L	0	0.350357175	6.066387653	-0.04009965	-4.47726536	-0.0673782	11.5060339
F450	L	0.75	0.350357175	6.769512653	-0.04009965	-4.47726536	-0.03730347	6.780463696
F450	L	1.5	0.350357175	8.878887177	-0.04009965	-4.47726536	-0.00722874	1.000205874
F450	L	2.25	0.350357175	10.98826122	-0.04009965	-4.47726536	0.022845995	-6.53786325
F450	L	3	0.350357175	11.69138622	-0.04009965	-4.47726536	0.052920725	-15.130619
F450	EX	0	-0.43333429	-0.75278425	0.838010848	2.634617805	1.401372313	-1.37192941
F450	EX	0.75	-0.43333429	-0.75278425	0.838010848	2.634617805	0.772864342	-0.80734134
F450	EX	1.5	-0.43333429	-0.75278425	0.838010848	2.634617805	0.144356385	-0.24275328
F450	EX	2.25	-0.43333429	-0.75278425	0.838010848	2.634617805	-0.48415154	0.321834743
F450	EX	3	-0.43333429	-0.75278425	0.838010848	2.634617805	-1.11265945	0.886422813
F450	EY	0	-21.7513142	10.93462372	-0.32317743	-0.00016327	-0.36556664	0.016553892
F450	EY	0.75	-21.7513142	10.93462372	-0.32317743	-0.00016327	-0.12318364	-8.184412
F450	EY	1.5	-21.7513142	10.93462372	-0.32317743	-0.00016327	0.119199365	-16.3853779
F450	EY	2.25	-21.7513142	10.93462372	-0.32317743	-0.00016327	0.361582369	-24.5863419
F450	EY	3	-21.7513142	10.93462372	-0.32317743	-0.00016327	0.603965342	-32.7873077
F450	COMB1	0	3.194430113	31.1987381	0.070592783	-22.1631317	0.152558818	83.56475067
F450	COMB1	0.75	3.194430113	47.1321106	0.070592783	-22.1631317	0.09961424	54.61186218
F450	COMB1	1.5	3.194430113	69.80422974	0.070592783	-22.1631317	0.046669684	11.18192101
F450	COMB1	2.25	3.194430113	92.47634125	0.070592783	-22.1631317	-0.00627489	-50.0944481
F450	COMB1	3	3.194430113	108.4097137	0.070592783	-22.1631317	-0.05921946	-125.84787
F450	COMB2	0	-4.88517666	23.38214111	0.870817125	-11.8081303	1.541861176	59.22037888
F450	COMB2	0.75	-4.88517666	36.56095123	0.870817125	-11.8081303	0.888748467	37.01488876
F450	COMB2	1.5	-4.88517666	54.11037827	0.870817125	-11.8081303	0.235635802	3.286314249
F450	COMB2	2.25	-4.88517666	71.65981293	0.870817125	-11.8081303	-0.41747683	-44.1506577
F450	COMB2	3	-4.88517666	84.83862305	0.870817125	-11.8081303	-1.07058942	-103.110718
F450	COMB3	0	-20.5603924	31.9610939	0.029913932	-13.7051744	0.264181614	60.2203331
F450	COMB3	0.75	-20.5603924	45.13990402	0.029913932	-13.7051744	0.241746172	31.58063126
F450	COMB3	1.5	-20.5603924	62.68933487	0.029913932	-13.7051744	0.219310746	-8.58215618
F450	COMB3	2.25	-20.5603924	80.2387619	0.029913932	-13.7051744	0.196875304	-62.4533386
F450	COMB3	3	-20.5603924	93.41757202	0.029913932	-13.7051744	0.174439877	-127.847618
F451	D	0	2.186345577	41.38504791	0.133369073	1.458804011	0.203818172	81.03932953
F451	D	0.75	2.186345577	48.09567261	0.133369073	1.458804011	0.103791401	47.95164108
F451	D	1.5	2.186345577	62.28754044	0.133369073	1.458804011	0.00376462	7.025527477
F451	D	2.25	2.186345577	76.47941589	0.133369073	1.458804011	-0.09626215	-45.479641
F451	D	3	2.186345577	83.19003296	0.133369073	1.458804011	-0.19628893	-105.823242
F451	L	0	0.724962473	13.72657299	-0.01169848	0.358171642	-0.02582994	25.45162773
F451	L	0.75	0.724962473	15.13282204	-0.01169848	0.358171642	-0.01705609	14.80513763
F451	L	1.5	0.724962473	19.35157204	-0.01169848	0.358171642	-0.00828223	2.049275637
F451	L	2.25	0.724962473	23.57032013	-0.01169848	0.358171642	0.000491622	-14.2222099
F451	L	3	0.724962473	24.97657013	-0.01169848	0.358171642	0.009265478	-32.6030693
F451	EX	0	-0.59400159	0.411284715	0.142276391	3.409776449	0.360788614	0.45549643
F451	EX	0.75	-0.59400159	0.411284715	0.142276391	3.409776449	0.254081368	0.147032961
F451	EX	1.5	-0.59400159	0.411284715	0.142276391	3.409776449	0.147374094	-0.16143049
F451	EX	2.25	-0.59400159	0.411284715	0.142276391	3.409776449	0.040666837	-0.46989396
F451	EX	3	-0.59400159	0.411284715	0.142276391	3.409776449	-0.06604043	-0.77835739
F451	EY	0	-21.1843014	10.56359959	-1.07955301	-0.00017788	-1.21559131	0.017882271
F451	EY	0.75	-21.1843014	10.56359959	-1.07955301	-0.00017788	-0.40592694	-7.90481472
F451	EY	1.5	-21.1843014	10.56359959	-1.07955301	-0.00017788	0.403737575	-15.8275127
F451	EY	2.25	-21.1843014	10.56359959	-1.07955301	-0.00017788	1.213402033	-23.7502098
F451	EY	3	-21.1843014	10.56359959	-1.07955301	-0.00017788	2.023066521	-31.6729069
F451	COMB1	0	3.783554554	71.62457275	0.141325325	2.323639393	0.203253895	137.9698029
F451	COMB1	0.75	3.783554554	81.92732239	0.141325325	2.323639393	0.097259939	81.23018646
F451	COMB1	1.5	3.783554554	105.7075653	0.141325325	2.323639393	-0.00873403	11.70947456
F451	COMB1	2.25	3.783554554	129.4878082	0.141325325	2.323639393	-0.11472799	-77.3311081
F451	COMB1	3	3.783554554	139.7905579	0.141325325	2.323639393	-0.22072195	-179.152802
F451	COMB2	0	-4.76382113	51.53138351	-0.05645061	5.173630714	0.19637759	93.58562469
F451	COMB2	0.75	-4.76382113	59.02050781	-0.05645061	5.173630714	0.238715529	52.67500305
F451	COMB2	1.5	-4.76382113	75.25087738	-0.05645061	5.173630714	0.281053483	2.8695786
F451	COMB2	2.25	-4.76382113	91.48124695	-0.05645061	5.173630714	0.323391438	-60.2012749
F451	COMB2	3	-4.76382113	98.97036743	-0.05645061	5.173630714	0.365729332	-132.166946
F451	COMB3	0	-19.906601	58.99950409	-0.95236105	2.718461037	-0.95684987	93.27081299
F451	COMB3	0.75	-19.906601	66.48862457	-0.95236105	2.718461037	-0.24257936	46.75910187
F451	COMB3	1.5	-19.906601	82.71900177	-0.95236105	2.718461037	0.471691251	-8.64741325
F451	COMB3	2.25	-19.906601	98.94937134	-0.95236105	2.718461037	1.185961843	-77.3193588
F451	COMB3	3	-19.906601	106.4384918	-0.95236105	2.718461037	1.900232315	-154.886108
F452	D	0	1.738569617	41.52321625	0.143817678	0.115218148	0.26292339	81.68366241
F452	D	0.75	1.738569617	48.23383713	0.143817678	0.115218148	0.155060172	48.49235153
F452	D	1.5	1.738569617	62.42570877	0.143817678	0.115218148	0.047196947	7.462614536
F452	D	2.25	1.738569617	76.61756897	0.143817678	0.115218148	-0.06066628	-45.1461754
F452	D	3	1.738569617	83.32819366	0.143817678	0.115218148	-0.1685295	-105.593399
F452	L	0	0.795714736	13.86549854	-0.00344325	0.073145539	-0.01531853	25.83923149

F452	L	0.75	0.795714736	15.27174854	-0.00344325	0.073145539	-0.0127361	15.08854961
F452	L	1.5	0.795714736	19.49049759	-0.00344325	0.073145539	-0.01015366	2.22849226
F452	L	2.25	0.795714736	23.70924568	-0.00344325	0.073145539	-0.00757123	-14.1471872
F452	L	3	0.795714736	25.11549377	-0.00344325	0.073145539	-0.00498879	-32.6322403
F452	EX	0	-4.15891886	-0.0950079	-0.54191315	3.202694654	-0.58052737	-0.1901691
F452	EX	0.75	-4.15891886	-0.0950079	-0.54191315	3.202694654	0.17409259	0.11891317
F452	EX	1.5	-4.15891886	-0.0950079	-0.54191315	3.202694654	0.232342184	-0.04765728
F452	EX	2.25	-4.15891886	-0.0950079	-0.54191315	3.202694654	0.638776898	0.023598628
F452	EX	3	-4.15891886	-0.0950079	-0.54191315	3.202694654	1.045211673	0.094854534
F452	EY	0	-1.56600571	9.774376869	-0.77927083	-0.00024562	-0.86210084	0.005180167
F452	EY	0.75	-1.56600571	9.774376869	-0.77927083	-0.00024562	-0.27764788	-7.32560015
F452	EY	1.5	-1.56600571	9.774376869	-0.77927083	-0.00024562	0.306805074	-14.6563816
F452	EY	2.25	-1.56600571	9.774376869	-0.77927083	-0.00024562	0.891258001	-21.9871616
F452	EY	3	-1.56600571	9.774376869	-0.77927083	-0.00024562	1.475710988	-29.3179417
F452	COMB1	0	3.359426975	72.01265717	0.167072013	0.255294651	0.290998399	139.3631592
F452	COMB1	0.75	3.359426975	82.3154068	0.167072013	0.255294651	0.165694445	82.33250427
F452	COMB1	1.5	3.359426975	106.0956421	0.167072013	0.255294651	0.040390477	12.52072525
F452	COMB1	2.25	3.359426975	129.875885	0.167072013	0.255294651	-0.0849135	-76.8109131
F452	COMB1	3	3.359426975	140.1786194	0.167072013	0.255294651	-0.21021746	-178.92366
F452	COMB2	0	-2.72162461	50.94760513	-0.65642649	3.458731413	-0.60116339	93.71200562
F452	COMB2	0.75	-2.72162461	58.43672562	-0.65642649	3.458731413	-0.1088436	53.23922348
F452	COMB2	1.5	-2.72162461	74.667099	-0.65642649	3.458731413	0.383476168	3.87163496
F452	COMB2	2.25	-2.72162461	90.89746094	-0.65642649	3.458731413	0.875795841	-58.7613831
F452	COMB2	3	-2.72162461	98.38658142	-0.65642649	3.458731413	1.368115664	-130.2892
F452	COMB3	0	-0.87821728	58.20017624	-0.8390131	1.152610779	-0.81682777	93.85273743
F452	COMB3	0.75	-0.87821728	65.68930054	-0.8390131	1.152610779	-0.18756813	47.94052505
F452	COMB3	1.5	-0.87821728	81.9196701	-0.8390131	1.152610779	0.441691488	-6.86649227
F452	COMB3	2.25	-0.87821728	98.15003204	-0.8390131	1.152610779	1.070951104	-74.9389343
F452	COMB3	3	-0.87821728	105.6391525	-0.8390131	1.152610779	1.70021081	-151.906189
F453	D	0	1.758636475	41.48653793	-0.14570634	-0.03653063	-0.26597568	81.62660217
F453	D	0.75	1.758636475	48.19715881	-0.14570634	-0.03653063	-0.15669596	48.46280289
F453	D	1.5	1.758636475	62.38902664	-0.14570634	-0.03653063	-0.04741624	7.460573196
F453	D	2.25	1.758636475	76.58089447	-0.14570634	-0.03653063	0.061863497	-45.1207085
F453	D	3	1.758636475	83.29151917	-0.14570634	-0.03653063	0.171143219	-105.540428
F453	L	0	0.827293277	13.97395039	-0.00089258	-0.12802303	0.008483178	25.98963547
F453	L	0.75	0.827293277	15.38020039	-0.00089258	-0.12802303	0.009152615	15.15761375
F453	L	1.5	0.827293277	19.59894943	-0.00089258	-0.12802303	0.009822051	2.216217995
F453	L	2.25	0.827293277	23.81769753	-0.00089258	-0.12802303	0.010491489	-14.2408009
F453	L	3	0.827293277	25.22394753	-0.00089258	-0.12802303	0.011160925	-32.8071938
F453	EX	0	4.061442375	0.095946327	-0.7782703	3.193394661	-0.89545637	0.195879012
F453	EX	0.75	4.061442375	0.095946327	-0.7782703	3.193394661	-0.31175384	0.123919286
F453	EX	1.5	4.061442375	0.095946327	-0.7782703	3.193394661	0.271948695	0.051959567
F453	EX	2.25	4.061442375	0.095946327	-0.7782703	3.193394661	0.855651259	-0.02000016
F453	EX	3	4.061442375	0.095946327	-0.7782703	3.193394661	1.439353824	-0.09195987
F453	EY	0	-1.56611419	9.774359703	0.779286027	0.000245629	0.862117231	0.005179586
F453	EY	0.75	-1.56611419	9.774359703	0.779286027	0.000245629	0.277652889	-7.32558823
F453	EY	1.5	-1.56611419	9.774359703	0.779286027	0.000245629	-0.30681148	-14.6563568
F453	EY	2.25	-1.56611419	9.774359703	0.779286027	0.000245629	-0.89127582	-21.9871235
F453	EY	3	-1.56611419	9.774359703	0.779286027	0.000245629	-1.47574008	-29.317894
F453	COMB1	0	3.434032917	72.14216614	-0.17627575	-0.2486736	-0.30559775	139.5353394
F453	COMB1	0.75	3.434032917	82.44491577	-0.17627575	-0.2486736	-0.17339097	82.407547
F453	COMB1	1.5	3.434032917	106.2251511	-0.17627575	-0.2486736	-0.0411842	12.4986372
F453	COMB1	2.25	3.434032917	130.0053864	-0.17627575	-0.2486736	0.091022581	-76.93013
F453	COMB1	3	3.434032917	140.308136	-0.17627575	-0.2486736	0.223229349	-179.140015
F453	COMB2	0	5.817432404	51.14088821	-0.71330744	3.226556301	0.93183273	94.09902954
F453	COMB2	0.75	5.817432404	58.6300087	-0.71330744	3.226556301	-0.39685225	53.48128891
F453	COMB2	1.5	5.817432404	74.86037445	-0.71330744	3.226556301	0.138128191	3.968736172
F453	COMB2	2.25	5.817432404	91.09074402	-0.71330744	3.226556301	0.673108637	-58.8092422
F453	COMB2	3	5.817432404	98.5798645	-0.71330744	3.226556301	1.208089113	-130.482025
F453	COMB3	0	1.74210012	58.25595856	0.419822335	0.927492797	0.346552044	93.96180725
F453	COMB3	0.75	1.74210012	65.74507904	0.419822335	0.927492797	0.031685386	48.00775909
F453	COMB3	1.5	1.74210012	81.97544861	0.419822335	0.927492797	-0.28318131	-6.84109735
F453	COMB3	2.25	1.74210012	98.20581818	0.419822335	0.927492797	-0.59804797	-74.9553757
F453	COMB3	3	1.74210012	105.6949387	0.419822335	0.927492797	-0.91291463	-151.964462
F454	D	0	2.219540119	41.53198624	-0.13797627	-1.58582413	-0.21108294	81.25743103
F454	D	0.75	2.219540119	48.24261093	-0.13797627	-1.58582413	-0.10760076	48.05953979
F454	D	1.5	2.219540119	62.43447876	-0.13797627	-1.58582413	-0.00411859	7.023224831
F454	D	2.25	2.219540119	76.62634277	-0.13797627	-1.58582413	0.099363573	-45.592144
F454	D	3	2.219540119	83.33696747	-0.13797627	-1.58582413	0.202845752	-106.045944
F454	L	0	0.964679301	13.66692543	0.0061387	-0.50805914	0.017611017	29.78477669
F454	L	0.75	0.964679301	16.33879852	0.0061387	-0.50805914	0.013006995	18.8666172
F454	L	1.5	0.964679301	24.35442162	0.0061387	-0.50805914	0.008402971	3.94064784
F454	L	2.25	0.964679301	32.37004471	0.0061387	-0.50805914	0.003798947	-17.6650047
F454	L	3	0.964679301	35.04191971	0.0061387	-0.50805914	-0.00080508	-43.2784653
F454	EX	0	0.386733085	-0.3994796	-0.7334922	3.377989769	-0.94026983	-0.43783718
F454	EX	0.75	0.386733085	-0.3994796	-0.7334922	3.377989769	-0.39015076	-0.13822758
F454	EX	1.5	0.386733085	-0.3994796	-0.7334922	3.377989769	0.159968272	0.161382034
F454	EX	2.25	0.386733085	-0.3994796	-0.7334922	3.377989769	0.710087299	0.460991651
F454	EX	3	0.386733085	-0.3994796	-0.7334922	3.377989769	1.260206342	0.760601282
F454	EY	0	-21.1842976	10.56359959	1.079545498	0.000177903	1.21558404	0.017882353
F454	EY	0.75	-21.1842976	10.56359959	1.079545498	0.000177903	0.405925184	-7.90481472
F454	EY	1.5	-21.1842976	10.56359959	1.079545498	0.000177903	-0.4037337	-15.8275108
F454	EY	2.25	-21.1842976	10.56359959	1.079545498	0.000177903	-1.21339262	-23.7502079
F454	EY	3	-21.1842976	10.56359959	1.079545498	0.000177903	-2.0230515	-31.6729031

F454	COMB1	0	4.206934929	71.70546722	-0.1557496	-2.71588349	-0.22512189	145.1645508
F454	COMB1	0.75	4.206934929	84.03321075	-0.1557496	-2.71588349	-0.10830972	87.85803223
F454	COMB1	1.5	4.206934929	113.8884506	-0.1557496	-2.71588349	0.008502444	14.73290634
F454	COMB1	2.25	4.206934929	143.7436829	-0.1557496	-2.71588349	0.125314608	-82.9745789
F454	COMB1	3	4.206934929	156.0714264	-0.1557496	-2.71588349	0.242126778	-196.500687
F454	COMB2	0	-3.63839388	50.82773972	-0.56204897	1.671121478	-0.80635989	94.25497437
F454	COMB2	0.75	-3.63839388	58.71553421	-0.56204897	1.671121478	-0.38482317	53.77241898
F454	COMB2	1.5	-3.63839388	76.14191437	-0.56204897	1.671121478	0.036713459	3.797054291
F454	COMB2	2.25	-3.63839388	93.56829834	-0.56204897	1.671121478	0.458250105	-60.4404182
F454	COMB2	3	-3.63839388	101.4560928	-0.56204897	1.671121478	0.87978673	-134.1707
F454	COMB3	0	-19.4873009	58.87961197	0.759531379	-0.76090038	0.764088631	94.58335876
F454	COMB3	0.75	-19.4873009	66.76740265	0.759531379	-0.76090038	0.194440365	48.06190491
F454	COMB3	1.5	-19.4873009	84.19378662	0.759531379	-0.76090038	-0.37520796	-7.95236158
F454	COMB3	2.25	-19.4873009	101.6201706	0.759531379	-0.76090038	-0.94485629	-78.2287369
F454	COMB3	3	-19.4873009	109.5079651	0.759531379	-0.76090038	-1.51450479	-157.997925
F455	D	0	2.566882372	17.81045532	-0.1168166	12.26475716	-0.22516479	60.68734741
F455	D	0.75	2.566882372	32.02107239	-0.1168166	12.26475716	-0.13755235	42.46810913
F455	D	1.5	2.566882372	53.71294022	-0.1168166	12.26475716	-0.04993993	10.78543949
F455	D	2.25	2.566882372	75.40480804	-0.1168166	12.26475716	0.037672486	-38.1012802
F455	D	3	2.566882372	89.61542511	-0.1168166	12.26475716	0.12528491	-100.451424
F455	L	0	0.761280298	6.063694477	0.037860397	4.438019276	0.063033789	18.38446808
F455	L	0.75	0.761280298	8.735569	0.037860397	4.438019276	0.034638502	13.16872978
F455	L	1.5	0.761280298	16.75119019	0.037860397	4.438019276	0.006243214	3.945181608
F455	L	2.25	0.761280298	24.76681328	0.037860397	4.438019276	-0.02215207	-11.9580498
F455	L	3	0.761280298	27.43868828	0.037860397	4.438019276	-0.05054737	-31.8690891
F455	EX	0	0.729771972	0.741218209	-0.72343326	2.593547583	-0.9142465	1.348527431
F455	EX	0.75	0.729771972	0.741218209	-0.72343326	2.593547583	-0.37167165	0.792613924
F455	EX	1.5	0.729771972	0.741218209	-0.72343326	2.593547583	0.170903102	0.236700386
F455	EX	2.25	0.729771972	0.741218209	-0.72343326	2.593547583	0.71347785	-0.31921309
F455	EX	3	0.729771972	0.741218209	-0.72343326	2.593547583	1.256052613	-0.8751266
F455	EY	0	-21.7513103	10.93462753	0.32317394	0.00016319	0.365562886	0.01655403
F455	EY	0.75	-21.7513103	10.93462753	0.32317394	0.00016319	0.123182528	-8.18441391
F455	EY	1.5	-21.7513103	10.93462753	0.32317394	0.00016319	-0.11919784	-16.3853817
F455	EY	2.25	-21.7513103	10.93462753	0.32317394	0.00016319	-0.36157823	-24.5863514
F455	EY	3	-21.7513103	10.93462753	0.32317394	0.00016319	-0.60395855	-32.7873192
F455	COMB1	0	4.298307419	31.07445717	-0.07960328	21.81853867	-0.16934367	102.2399673
F455	COMB1	0.75	4.298307419	52.40219879	-0.07960328	21.81853867	-0.10964122	72.03170013
F455	COMB1	1.5	4.298307419	91.25743866	-0.07960328	21.81853867	-0.04993878	19.25481796
F455	COMB1	2.25	4.298307419	130.1126709	-0.07960328	21.81853867	0.009763666	-64.8544159
F455	COMB1	3	4.298307419	151.4404144	-0.07960328	21.81853867	0.069466107	-171.532257
F455	COMB2	0	-3.16131902	24.82260895	-0.75768507	16.96034431	-1.04766023	70.91376495
F455	COMB2	0.75	-3.16131902	40.58539963	-0.75768507	16.96034431	-0.47939652	46.98192596
F455	COMB2	1.5	-3.16131902	65.88677979	-0.75768507	16.96034431	0.088867068	7.651032925
F455	COMB2	2.25	-3.16131902	91.18816376	-0.75768507	16.96034431	0.657130659	-51.8482132
F455	COMB2	3	-3.16131902	106.9509506	-0.75768507	16.96034431	1.225394249	-126.746521
F455	COMB3	0	-19.6739674	32.32588577	0.000719752	15.09311008	-0.12071399	69.95498657
F455	COMB3	0.75	-19.6739674	48.08867645	0.000719752	15.09311008	-0.12125376	40.39570236
F455	COMB3	1.5	-19.6739674	73.3900528	0.000719752	15.09311008	-0.12179358	-4.56264734
F455	COMB3	2.25	-19.6739674	98.69143677	0.000719752	15.09311008	-0.12233339	-69.6893463
F455	COMB3	3	-19.6739674	114.4542236	0.000719752	15.09311008	-0.12287319	-150.215103
F456	D	0	-0.62986821	-40.5546875	-0.03515934	3.19045E-05	-0.10085779	-31.4977093
F456	D	1.25	-0.62986821	-26.114069	-0.03515934	3.19045E-05	-0.05690862	12.33498001
F456	D	2.5	-0.62986821	2.457802534	-0.03515934	3.19045E-05	-0.01295945	27.34527588
F456	D	3.75	-0.62986821	31.02967262	-0.03515934	3.19045E-05	0.030989725	6.190473557
F456	D	5	-0.62986821	45.47029495	-0.03515934	3.19045E-05	0.074938901	-43.7867203
F456	L	0	0.993566692	-12.7815428	-0.00161431	0.000282323	-0.00595316	-11.1009808
F456	L	1.25	0.993566692	-8.87529278	-0.00161431	0.000282323	-0.00393527	3.248343945
F456	L	2.5	0.993566692	0.343457669	-0.00161431	0.000282323	-0.00191738	8.665376663
F456	L	3.75	0.993566692	9.562208176	-0.00161431	0.000282323	0.000100506	2.389699459
F456	L	5	0.993566692	13.46845818	-0.00161431	0.000282323	0.002118393	-12.8182697
F456	EX	0	-36.3160629	15.14607143	0.157686472	0.008988877	0.400705874	40.14801025
F456	EX	1.25	-36.3160629	15.14607143	0.157686472	0.008988877	0.203597799	21.21542168
F456	EX	2.5	-36.3160629	15.14607143	0.157686472	0.008988877	0.006489708	2.282832623
F456	EX	3.75	-36.3160629	15.14607143	0.157686472	0.008988877	-0.19061838	-16.6497574
F456	EX	5	-36.3160629	15.14607143	0.157686472	0.008988877	-0.38772646	-35.5823479
F456	EY	0	-0.00130637	0.000143604	0.429117411	0.050390955	1.238299131	0.000304499
F456	EY	1.25	-0.00130637	0.000143604	0.429117411	0.050390955	0.70190227	0.000124994
F456	EY	2.5	-0.00130637	0.000143604	0.429117411	0.050390955	0.165505469	-5.451E-05
F456	EY	3.75	-0.00130637	0.000143604	0.429117411	0.050390955	-0.37089133	-0.00023402
F456	EY	5	-0.00130637	0.000143604	0.429117411	0.050390955	-0.90728813	-0.00041352
F456	COMB1	0	0.833864808	-69.1160965	-0.0447741	0.000490002	-0.13055441	-55.5588226
F456	COMB1	1.25	0.833864808	-45.5373497	-0.0447741	0.000490002	-0.07458678	19.9993248
F456	COMB1	2.5	0.833864808	3.498895407	-0.0447741	0.000490002	-0.01861915	46.67893219
F456	COMB1	3.75	0.833864808	52.53513718	-0.0447741	0.000490002	0.037348479	11.25208759
F456	COMB1	5	0.833864808	76.11388397	-0.0447741	0.000490002	0.093316108	-73.053299
F456	COMB2	0	-37.9359245	-30.9323788	0.260951668	0.02529907	0.697018862	4.983883381
F456	COMB2	1.25	-37.9359245	-14.539259	0.260951668	0.02529907	0.370829284	35.9329567
F456	COMB2	2.5	-37.9359245	18.3651104	0.260951668	0.02529907	0.044639677	33.80484772
F456	COMB2	3.75	-37.9359245	51.26948166	0.260951668	0.02529907	-0.28154993	-9.97982025
F456	COMB2	5	-37.9359245	67.66260529	0.260951668	0.02529907	-0.60773951	-86.8416748
F456	COMB3	0	-11.78932	-41.8374443	0.462818712	0.055864431	1.318660498	-23.9224606
F456	COMB3	1.25	-11.78932	-25.4443245	0.462818712	0.055864431	0.740137041	20.65794563
F456	COMB3	2.5	-11.78932	7.460045338	0.462818712	0.055864431	0.161613613	32.16116714
F456	COMB3	3.75	-11.78932	40.36441422	0.462818712	0.055864431	-0.41690981	2.007833004

F456	COMB3	5	-11.78932	56.75753784	0.462818712	0.055864431	-0.99543327	-61.2226868
F457	D	0	-1.18718112	-42.4014206	-0.10701925	0.055233199	-0.25721902	-40.5427322
F457	D	1.25	-1.18718112	-27.9607964	-0.10701925	0.055233199	-0.12344494	5.598369122
F457	D	2.5	-1.18718112	0.611072481	-0.10701925	0.055233199	0.010329125	22.91707802
F457	D	3.75	-1.18718112	29.18294334	-0.10701925	0.055233199	0.144103199	4.070687771
F457	D	5	-1.18718112	43.62356567	-0.10701925	0.055233199	0.277877241	-43.5980949
F457	L	0	1.02320683	-12.9440289	-0.01853705	0.020679532	-0.04619296	-12.7400904
F457	L	1.25	1.02320683	-9.0377779	-0.01853705	0.020679532	-0.02302164	1.812340498
F457	L	2.5	1.02320683	0.180972561	-0.01853705	0.020679532	0.000149667	7.432479382
F457	L	3.75	1.02320683	9.399723053	-0.01853705	0.020679532	0.023320977	1.359909058
F457	L	5	1.02320683	13.30597305	-0.01853705	0.020679532	0.04649229	-13.6449537
F457	EX	0	-26.9317284	13.40785503	0.035335377	0.006374488	0.140124604	33.36527634
F457	EX	1.25	-26.9317284	13.40785503	0.035335377	0.006374488	0.095955379	16.6054554
F457	EX	2.5	-26.9317284	13.40785503	0.035335377	0.006374488	0.051786151	-0.15436366
F457	EX	3.75	-26.9317284	13.40785503	0.035335377	0.006374488	0.007616924	-16.9141827
F457	EX	5	-26.9317284	13.40785503	0.035335377	0.006374488	-0.0365523	-33.6740036
F457	EY	0	-0.00665933	-0.00104343	1.35973537	0.105968669	3.337528467	-0.00259859
F457	EY	1.25	-0.00665933	-0.00104343	1.35973537	0.105968669	1.637859225	-0.00129431
F457	EY	2.5	-0.00665933	-0.00104343	1.35973537	0.105968669	-0.06180996	9.97638E-06
F457	EY	3.75	-0.00665933	-0.00104343	1.35973537	0.105968669	-1.76147914	0.001314261
F457	EY	5	-0.00665933	-0.00104343	1.35973537	0.105968669	-3.46114826	0.002618546
F457	COMB1	0	0.212513626	-71.5921478	-0.15808238	0.09936709	-0.38257155	-69.0354233
F457	COMB1	1.25	0.212513626	-48.013401	-0.15808238	0.09936709	-0.18496856	9.617787361
F457	COMB1	2.5	0.212513626	1.022843122	-0.15808238	0.09936709	0.012634417	39.39245987
F457	COMB1	3.75	0.212513626	50.05908585	-0.15808238	0.09936709	0.210237399	7.060679436
F457	COMB1	5	0.212513626	73.63783264	-0.15808238	0.09936709	0.407840371	-74.1496353
F457	COMB2	0	-28.8006668	-34.7220612	0.34667936	0.104486637	0.91171968	-12.0507536
F457	COMB2	1.25	-28.8006668	-18.3289356	0.34667936	0.104486637	0.478370458	23.63541412
F457	COMB2	2.5	-28.8006668	14.57543373	0.34667936	0.104486637	0.045021255	26.24439812
F457	COMB2	3.75	-28.8006668	47.47980499	0.34667936	0.104486637	-0.38832796	-12.8031721
F457	COMB2	5	-28.8006668	63.8729248	0.34667936	0.104486637	-0.82167715	-84.9279251
F457	COMB3	0	-9.41471672	-44.3764839	1.320643306	0.177783981	3.263913393	-36.0756607
F457	COMB3	1.25	-9.41471672	-27.9833584	1.320643306	0.177783981	1.613109112	11.67853451
F457	COMB3	2.5	-9.41471672	4.921010971	1.320643306	0.177783981	-0.03769509	26.35554886
F457	COMB3	3.75	-9.41471672	37.82538223	1.320643306	0.177783981	-1.68849933	-0.62399453
F457	COMB3	5	-9.41471672	54.21850586	1.320643306	0.177783981	-3.33930349	-60.6807213
F458	D	0	-1.244591	-42.8978233	0.003204901	-0.0001329	0.024559677	-41.8840485
F458	D	1.25	-1.244591	-28.4571972	0.003204901	-0.0001329	0.02055355	4.877549171
F458	D	2.5	-1.244591	0.114672549	0.003204901	-0.0001329	0.016547425	22.81675911
F458	D	3.75	-1.244591	28.68654251	0.003204901	-0.0001329	0.012541297	4.590867996
F458	D	5	-1.244591	43.12716675	0.003204901	-0.0001329	0.008535171	-42.4574165
F458	L	0	0.830927193	-12.9601908	0.00230905	-0.0008842	0.011254659	-12.9116068
F458	L	1.25	0.830927193	-9.05394077	0.00230905	-0.0008842	0.008368347	1.661028385
F458	L	2.5	0.830927193	0.164809763	0.00230905	-0.0008842	0.005482035	7.301371098
F458	L	3.75	0.830927193	9.383560181	0.00230905	-0.0008842	0.002595722	1.249003887
F458	L	5	0.830927193	13.28981113	0.00230905	-0.0008842	-0.00029059	-13.7356548
F458	EX	0	-19.3957653	13.45487404	0.585404277	0.015610022	1.465486407	33.65702057
F458	EX	1.25	-19.3957653	13.45487404	0.585404277	0.015610022	0.733731031	16.8384285
F458	EX	2.5	-19.3957653	13.45487404	0.585404277	0.015610022	0.00197563	0.019835491
F458	EX	3.75	-19.3957653	13.45487404	0.585404277	0.015610022	-0.72977978	-16.7987576
F458	EX	5	-19.3957653	13.45487404	0.585404277	0.015610022	-1.4615351	-33.6173515
F458	EY	0	-0.01241842	1.41152E-07	-1.7422E-05	2.24066E-06	-0.34787554	0.000129877
F458	EY	1.25	-0.01241842	1.41152E-07	-1.7422E-05	2.24066E-06	-0.34785375	0.0001297
F458	EY	2.5	-0.01241842	1.41152E-07	-1.7422E-05	2.24066E-06	-0.34783196	0.000129524
F458	EY	3.75	-0.01241842	1.41152E-07	-1.7422E-05	2.24066E-06	-0.34781021	0.000129347
F458	EY	5	-0.01241842	1.41152E-07	-1.7422E-05	2.24066E-06	-0.34778839	0.000129171
F458	COMB1	0	-0.16402568	-72.2136917	0.007540361	-0.0015742	0.047479067	-70.9194336
F458	COMB1	1.25	-0.16402568	-48.6349411	0.007540361	-0.0015742	0.038053613	8.510704994
F458	COMB1	2.5	-0.16402568	0.401302695	0.007540361	-0.0015742	0.028628165	39.06230545
F458	COMB1	3.75	-0.16402568	49.43754578	0.007540361	-0.0015742	0.019202713	7.50744772
F458	COMB1	5	-0.16402568	73.01629639	0.007540361	-0.0015742	0.009777262	-72.9259491
F458	COMB2	0	-21.1236076	-35.199379	0.609980464	0.015739007	1.43653059	-13.210351
F458	COMB2	1.25	-21.1236076	-18.8062534	0.609980464	0.015739007	0.674054921	23.0724659
F458	COMB2	2.5	-21.1236076	14.09811592	0.609980464	0.015739007	-0.08842065	26.27809906
F458	COMB2	3.75	-21.1236076	47.00248718	0.609980464	0.015739007	-0.85089624	-12.1728258
F458	COMB2	5	-21.1236076	63.39560699	0.609980464	0.015739007	-1.61337185	-83.7009354
F458	COMB3	0	-7.16778374	-44.8868866	0.188476548	0.004501439	0.125691801	-37.4433098
F458	COMB3	1.25	-7.16778374	-28.493763	0.188476548	0.004501439	-0.10990392	10.94889164
F458	COMB3	2.5	-7.16778374	4.410606861	0.188476548	0.004501439	-0.3454996	26.2639122
F458	COMB3	3.75	-7.16778374	37.31497574	0.188476548	0.004501439	-0.58109534	-0.07762507
F458	COMB3	5	-7.16778374	53.70809937	0.188476548	0.004501439	-0.81669098	-59.4963455
F459	D	0	-1.36640322	-43.3098412	0.112020828	-0.05532484	0.290269017	-42.9277573
F459	D	1.25	-1.36640322	-28.8692169	0.112020828	-0.05532484	0.150242999	4.348867893
F459	D	2.5	-1.36640322	-0.29734728	0.112020828	-0.05532484	0.010216956	22.80310249
F459	D	3.75	-1.36640322	28.27452278	0.112020828	-0.05532484	-0.12980908	5.092236519
F459	D	5	-1.36640322	42.71514511	0.112020828	-0.05532484	-0.26983511	-41.441021
F459	L	0	0.989998281	-13.4869995	0.023750944	-0.0202918	0.059709277	-14.1449299
F459	L	1.25	0.989998281	-9.58075047	0.023750944	-0.0202918	0.030020598	1.086216331
F459	L	2.5	0.989998281	-0.3619999	0.023750944	-0.0202918	0.000331919	7.385070801
F459	L	3.75	0.989998281	8.856750488	0.023750944	-0.0202918	-0.02935676	1.991216183
F459	L	5	0.989998281	12.76300049	0.023750944	-0.0202918	-0.05904545	-12.3349304
F459	EX	0	-12.3501043	13.32643127	0.03093804	0.006029532	0.022102162	33.49940109
F459	EX	1.25	-12.3501043	13.32643127	0.03093804	0.006029532	-0.01657039	16.841362
F459	EX	2.5	-12.3501043	13.32643127	0.03093804	0.006029532	-0.05524294	0.18332395

F459	EX	3.75	-12.3501043	13.32643127	0.03093804	0.006029532	-0.0939155	-16.4747162
F459	EX	5	-12.3501043	13.32643127	0.03093804	0.006029532	-0.13258806	-33.1327553
F459	EY	0	-0.00665939	0.001043729	-1.35972619	-0.10597084	-3.46112013	0.002619308
F459	EY	1.25	-0.00665939	0.001043729	-1.35972619	-0.10597084	-1.76146233	0.001314647
F459	EY	2.5	-0.00665939	0.001043729	-1.35972619	-0.10597084	-0.06180459	9.98541E-06
F459	EY	3.75	-0.00665939	0.001043729	-1.35972619	-0.10597084	1.637853146	-0.00129468
F459	EY	5	-0.00665939	0.001043729	-1.35972619	-0.10597084	3.337511063	-0.00259934
F459	COMB1	0	-0.05568656	-73.5510101	0.172426492	-0.09885669	0.44385767	-74.145195
F459	COMB1	1.25	-0.05568656	-49.9722595	0.172426492	-0.09885669	0.228324547	6.956587791
F459	COMB1	2.5	-0.05568656	-0.93601656	0.172426492	-0.09885669	0.012791418	39.17983627
F459	COMB1	3.75	-0.05568656	48.10022736	0.172426492	-0.09885669	-0.20274171	9.296629906
F459	COMB1	5	-0.05568656	71.67897797	0.172426492	-0.09885669	-0.41827485	-69.4651108
F459	COMB2	0	-13.9073296	-35.9305534	-0.27118945	-0.09162325	-0.74378622	-14.8570919
F459	COMB2	1.25	-13.9073296	-19.5374279	-0.27118945	-0.09162325	-0.40479934	22.33969498
F459	COMB2	2.5	-13.9073296	13.3669405	-0.27118945	-0.09162325	-0.06581254	26.45929909
F459	COMB2	3.75	-13.9073296	46.27131271	-0.27118945	-0.09162325	0.273174286	-11.0776567
F459	COMB2	5	-13.9073296	62.66443253	-0.27118945	-0.09162325	0.61216116	-81.6917953
F459	COMB3	0	-5.02014923	-45.5248146	-1.29286361	-0.17385308	-3.30362296	-38.9747353
F459	COMB3	1.25	-5.02014923	-29.131691	-1.29286361	-0.17385308	-1.68754351	10.21487904
F459	COMB3	2.5	-5.02014923	3.772677183	-1.29286361	-0.17385308	-0.07146398	26.32731247
F459	COMB3	3.75	-5.02014923	36.67704773	-1.29286361	-0.17385308	1.544615507	0.783186674
F459	COMB3	5	-5.02014923	53.07017136	-1.29286361	-0.17385308	3.160695076	-57.8381233
F460	D	0	-0.77997273	-45.8256798	0.040304143	-1.9208E-05	0.087176062	-44.7391129
F460	D	1.25	-0.77997273	-31.3850613	0.040304143	-1.9208E-05	0.036795881	5.682315826
F460	D	2.5	-0.77997273	-2.81318998	0.040304143	-1.9208E-05	-0.0135843	27.281353
F460	D	3.75	-0.77997273	25.75868034	0.040304143	-1.9208E-05	-0.06396448	12.71529102
F460	D	5	-0.77997273	40.19930267	0.040304143	-1.9208E-05	-0.11434466	-30.6731625
F460	L	0	1.007900834	-13.3986073	0.007492017	-0.00030099	0.016151158	-12.6070452
F460	L	1.25	1.007900834	-9.4923563	0.007492017	-0.00030099	0.006786137	2.513609886
F460	L	2.5	1.007900834	-0.27360648	0.007492017	-0.00030099	-0.00257888	8.701972008
F460	L	3.75	1.007900834	8.9451437	0.007492017	-0.00030099	-0.0119439	3.197626114
F460	L	5	1.007900834	12.8513937	0.007492017	-0.00030099	-0.02130893	-11.2390127
F460	EX	0	-4.73110723	14.93756962	0.153560445	0.00824371	0.378208339	35.15153122
F460	EX	1.25	-4.73110723	14.93756962	0.153560445	0.00824371	0.18625775	16.47956848
F460	EX	2.5	-4.73110723	14.93756962	0.153560445	0.00824371	-0.00569282	-2.1923945
F460	EX	3.75	-4.73110723	14.93756962	0.153560445	0.00824371	-0.1976434	-20.8643589
F460	EX	5	-4.73110723	14.93756962	0.153560445	0.00824371	-0.38959396	-39.5363235
F460	EY	0	-0.00130639	-0.00014327	-0.42911261	-0.05039161	-0.90727717	-0.00041275
F460	EY	1.25	-0.00130639	-0.00014327	-0.42911261	-0.05039161	-0.37088639	-0.00023366
F460	EY	2.5	-0.00130639	-0.00014327	-0.42911261	-0.05039161	0.165504381	-5.4565E-05
F460	EY	3.75	-0.00130639	-0.00014327	-0.42911261	-0.05039161	0.701895177	0.000124527
F460	EY	5	-0.00130639	-0.00014327	-0.42911261	-0.05039161	1.238285899	0.00030362
F460	COMB1	0	0.676674128	-76.4285889	0.060352199	-0.00050464	0.130453125	-73.8582077
F460	COMB1	1.25	0.676674128	-52.8498421	0.060352199	-0.00050464	0.055012878	10.84055519
F460	COMB1	2.5	0.676674128	-3.81359816	0.060352199	-0.00050464	-0.02042738	46.66077805
F460	COMB1	3.75	0.676674128	45.22264481	0.060352199	-0.00050464	-0.09586763	20.37454987
F460	COMB1	5	0.676674128	68.8013916	0.060352199	-0.00050464	-0.17130788	-54.7902145
F460	COMB2	0	-5.39859009	-36.8771858	0.068443924	-0.0074561	0.202275783	-14.5655823
F460	COMB2	1.25	-5.39859009	-20.484066	0.068443924	-0.0074561	0.11672087	23.8144989
F460	COMB2	2.5	-5.39859009	12.4203043	0.068443924	-0.0074561	0.031165944	29.1173954
F460	COMB2	3.75	-5.39859009	45.3246727	0.068443924	-0.0074561	-0.05438898	-7.23626423
F460	COMB2	5	-5.39859009	61.71779633	0.068443924	-0.0074561	-0.1399439	-76.6671066
F460	COMB3	0	-1.9931531	-47.6323433	-0.35751736	-0.05042941	-0.73688293	-39.8749886
F460	COMB3	1.25	-1.9931531	-31.2392216	-0.35751736	-0.05042941	-0.28998622	11.94903755
F460	COMB3	2.5	-1.9931531	1.665148616	-0.35751736	-0.05042941	0.156910494	30.69588089
F460	COMB3	3.75	-1.9931531	34.56951904	-0.35751736	-0.05042941	0.603807211	7.786165237
F460	COMB3	5	-1.9931531	50.96263885	-0.35751736	-0.05042941	1.050703883	-48.2007332
F461	D	0	2.259922266	-74.7879868	-0.01866491	12.5386095	-0.02054305	-84.8885651
F461	D	0.75	2.259922266	-62.4476891	-0.01866491	12.5386095	-0.00654438	-33.191452
F461	D	1.5	2.259922266	-46.3667717	-0.01866491	12.5386095	0.007454286	7.847711086
F461	D	2.25	2.259922266	-30.2858505	-0.01866491	12.5386095	0.021452952	36.3586235
F461	D	3	2.259922266	-17.9455528	-0.01866491	12.5386095	0.035451621	54.21158981
F461	L	0	0.355510592	-11.6383352	0.038993895	4.482237339	0.057404354	-14.9891176
F461	L	0.75	0.355510592	-10.9352112	0.038993895	4.482237339	0.028158966	-6.43615627
F461	L	1.5	0.355510592	-8.82583809	0.038993895	4.482237339	-0.00108642	1.062119126
F461	L	2.25	0.355510592	-6.71646595	0.038993895	4.482237339	-0.03033181	6.802586079
F461	L	3	0.355510592	-6.01334143	0.038993895	4.482237339	-0.0595772	11.48836708
F461	EX	0	-0.0857035	1.066781282	-1.05938113	-2.66109037	-1.54234302	1.851687431
F461	EX	0.75	-0.0857035	1.066781282	-1.05938113	-2.66109037	-0.74780804	1.051602364
F461	EX	1.5	-0.0857035	1.066781282	-1.05938113	-2.66109037	0.046726905	0.251517355
F461	EX	2.25	-0.0857035	1.066781282	-1.05938113	-2.66109037	0.841261864	-0.54856771
F461	EX	3	-0.0857035	1.066781282	-1.05938113	-2.66109037	1.635796785	-1.34865272
F461	EY	0	-14.0026178	10.7525816	-0.32177353	-0.00010654	-0.60241598	32.50833893
F461	EY	0.75	-14.0026178	10.7525816	-0.32177353	-0.00010654	-0.36108607	24.44391441
F461	EY	1.5	-14.0026178	10.7525816	-0.32177353	-0.00010654	-0.11975619	16.37948608
F461	EY	2.25	-14.0026178	10.7525816	-0.32177353	-0.00010654	0.121573679	8.315059662
F461	EY	3	-14.0026178	10.7525816	-0.32177353	-0.00010654	0.362903535	0.250633091
F461	COMB1	0	3.280723572	-108.36692	0.039992336	22.21791077	0.067195311	-125.848862
F461	COMB1	0.75	3.280723572	-92.4335632	0.039992336	22.21791077	0.037201092	-50.1275902
F461	COMB1	1.5	3.280723572	-69.761467	0.039992336	22.21791077	0.00720687	11.11664391
F461	COMB1	2.25	3.280723572	-47.0893669	0.039992336	22.21791077	-0.02278735	54.51448441
F461	COMB1	3	3.280723572	-31.1560097	0.039992336	22.21791077	-0.05278157	83.4352951
F461	COMB2	0	-2.01462364	-77.7022858	-1.2051332	11.82318211	-1.78957391	-81.697937
F461	COMB2	0.75	-2.01462364	-64.5234833	-1.2051332	11.82318211	-0.8857249	-28.0901718

F461	COMB2	1.5	-2.01462364	-46.9740677	-1.2051332	11.82318211	0.018123925	13.99452305
F461	COMB2	2.25	-2.01462364	-29.4246483	-1.2051332	11.82318211	0.921972811	42.37084579
F461	COMB2	3	-2.01462364	-16.2458515	-1.2051332	11.82318211	1.825821757	59.22409821
F461	COMB3	0	-12.2448416	-70.567215	-0.67888236	13.73908901	-1.12186265	-59.1375237
F461	COMB3	0.75	-12.2448416	-57.3884163	-0.67888236	13.73908901	-0.61270142	-10.8810492
F461	COMB3	1.5	-12.2448416	-39.8390007	-0.67888236	13.73908901	-0.10354025	25.85235214
F461	COMB3	2.25	-12.2448416	-22.2895813	-0.67888236	13.73908901	0.405620933	48.87738419
F461	COMB3	3	-12.2448416	-9.11078548	-0.67888236	13.73908901	0.914782107	60.37934494
F462	D	0	2.290989637	-83.1391144	0.05030724	-1.55510926	0.104966708	-105.890297
F462	D	0.75	2.290989637	-76.4284973	0.05030724	-1.55510926	0.067236327	-45.5849342
F462	D	1.5	2.290989637	-62.2366409	0.05030724	-1.55510926	0.029505936	6.882008076
F462	D	2.25	2.290989637	-48.0447807	0.05030724	-1.55510926	-0.00822445	47.76991653
F462	D	3	2.290989637	-41.3341637	0.05030724	-1.55510926	-0.04595483	80.8194046
F462	L	0	0.734279037	-24.9226341	0.031093642	-0.38891628	0.048719414	-32.4917526
F462	L	0.75	0.734279037	-23.5163841	0.031093642	-0.38891628	0.025399208	-14.1513586
F462	L	1.5	0.734279037	-19.2976398	0.031093642	-0.38891628	0.002079004	2.079662085
F462	L	2.25	0.734279037	-15.0788937	0.031093642	-0.38891628	-0.0212412	14.79506588
F462	L	3	0.734279037	-13.6726465	0.031093642	-0.38891628	-0.0445614	25.40110016
F462	EX	0	-0.43504506	-0.18077701	-0.45483577	-3.40751743	-0.6408416	-0.11494356
F462	EX	0.75	-0.43504506	-0.18077701	-0.45483577	-3.40751743	-0.29971513	0.020639053
F462	EX	1.5	-0.43504506	-0.18077701	-0.45483577	-3.40751743	0.041411288	0.156221658
F462	EX	2.25	-0.43504506	-0.18077701	-0.45483577	-3.40751743	0.382537723	0.291804284
F462	EX	3	-0.43504506	-0.18077701	-0.45483577	-3.40751743	0.723664165	0.42738688
F462	EY	0	-13.76262	10.38881588	-1.07270622	-0.00070188	-2.0159924	31.40619659
F462	EY	0.75	-13.76262	10.38881588	-1.07270622	-0.00070188	-1.21146369	23.61459351
F462	EY	1.5	-13.76262	10.38881588	-1.07270622	-0.00070188	-0.40693483	15.8229942
F462	EY	2.25	-13.76262	10.38881588	-1.07270622	-0.00070188	0.397593915	8.031387329
F462	EY	3	-13.76262	10.38881588	-1.07270622	-0.00070188	1.202122688	0.239784703
F462	COMB1	0	3.924034119	-139.643143	0.110118516	-2.48839736	0.203911111	-179.055161
F462	COMB1	0.75	3.924034119	-129.340408	0.110118516	-2.48839736	0.121322326	-77.3440933
F462	COMB1	1.5	3.924034119	-105.560188	0.110118516	-2.48839736	0.038733531	11.58586884
F462	COMB1	2.25	3.924034119	-81.7799683	0.110118516	-2.48839736	-0.04385526	80.9960022
F462	COMB1	3	3.924034119	-71.4772263	0.110118516	-2.48839736	-0.12644406	137.6250458
F462	COMB2	0	-2.14865994	-92.0613251	-0.7460404	-5.28237486	-1.17274702	-111.645729
F462	COMB2	0.75	-2.14865994	-84.5722122	-0.7460404	-5.28237486	-0.61321735	-44.8619003
F462	COMB2	1.5	-2.14865994	-68.3418579	-0.7460404	-5.28237486	-0.05368767	13.02713394
F462	COMB2	2.25	-2.14865994	-52.1114998	-0.7460404	-5.28237486	0.50584197	57.65076065
F462	COMB2	3	-2.14865994	-44.6223831	-0.7460404	-5.28237486	1.065371633	93.37960052
F462	COMB3	0	-11.9509535	-84.2953873	-1.20699775	-2.82947826	-2.19309545	-88.4794159
F462	COMB3	0.75	-11.9509535	-76.8062744	-1.20699775	-2.82947826	-1.28784823	-27.5200348
F462	COMB3	1.5	-11.9509535	-60.5759163	-1.20699775	-2.82947826	-0.3826009	24.54455185
F462	COMB3	2.25	-11.9509535	-44.345562	-1.20699775	-2.82947826	0.522646368	63.34373474
F462	COMB3	3	-11.9509535	-36.8564415	-1.20699775	-2.82947826	1.427893639	93.24812317
F463	D	0	1.932783604	-81.3387604	0.028305233	0.068303831	0.050671343	-103.703285
F463	D	0.75	1.932783604	-74.6281433	0.028305233	0.068303831	0.029442444	-44.7481804
F463	D	1.5	1.932783604	-60.4362907	0.028305233	0.068303831	0.008213542	6.368499756
F463	D	2.25	1.932783604	-46.2444305	0.028305233	0.068303831	-0.01301536	45.90615082
F463	D	3	1.932783604	-39.5338173	0.028305233	0.068303831	-0.03424426	77.6053772
F463	L	0	0.752134204	-24.4063034	0.013416268	-0.01553291	0.022478912	-31.9110203
F463	L	0.75	0.752134204	-23.0000553	0.013416268	-0.01553291	0.012416723	-13.9578772
F463	L	1.5	0.752134204	-18.781311	0.013416268	-0.01553291	0.002354534	1.88589716
F463	L	2.25	0.752134204	-14.5625639	0.013416268	-0.01553291	-0.00770766	14.21405506
F463	L	3	0.752134204	-13.1563168	0.013416268	-0.01553291	-0.01776985	24.43284225
F463	EX	0	-2.82452345	0.070473723	-0.25232849	-3.23664308	-0.42991242	0.179654598
F463	EX	0.75	-2.82452345	0.070473723	-0.25232849	-3.23664308	-0.24066626	0.126799375
F463	EX	1.5	-2.82452345	0.070473723	-0.25232849	-3.23664308	-0.05142011	0.073944137
F463	EX	2.25	-2.82452345	0.070473723	-0.25232849	-3.23664308	0.137826025	0.021088909
F463	EX	3	-2.82452345	0.070473723	-0.25232849	-3.23664308	0.327072173	-0.03176632
F463	EY	0	-0.55104047	9.624726295	-0.77184176	-0.00058217	-1.46820056	29.09934425
F463	EY	0.75	-0.55104047	9.624726295	-0.77184176	-0.00058217	-0.88931996	21.88080788
F463	EY	1.5	-0.55104047	9.624726295	-0.77184176	-0.00058217	-0.31043935	14.66227055
F463	EY	2.25	-0.55104047	9.624726295	-0.77184176	-0.00058217	0.26844129	7.443734169
F463	EY	3	-0.55104047	9.624726295	-0.77184176	-0.00058217	0.847321928	0.225197554
F463	COMB1	0	3.522755146	-136.656601	0.055432308	0.057111945	0.096771874	-175.501572
F463	COMB1	0.75	3.522755146	-126.353859	0.055432308	0.057111945	0.05519769	-76.0304184
F463	COMB1	1.5	3.522755146	-102.573647	0.055432308	0.057111945	0.013623505	10.65963554
F463	COMB1	2.25	3.522755146	-78.7934189	0.055432308	0.057111945	-0.02795068	77.8298645
F463	COMB1	3	3.522755146	-68.4906845	0.055432308	0.057111945	-0.06952486	132.2189941
F463	COMB2	0	-0.83061433	-89.9889526	-0.47034353	-3.28328276	-0.84715676	-109.588181
F463	COMB2	0.75	-0.83061433	-82.4998398	-0.47034353	-3.28328276	-0.49439955	-44.3586311
F463	COMB2	1.5	-0.83061433	-66.2694855	-0.47034353	-3.28328276	-0.1416423	11.97612953
F463	COMB2	2.25	-0.83061433	-50.0391312	-0.47034353	-3.28328276	0.211114913	55.04548645
F463	COMB2	3	-0.83061433	-42.5500183	-0.47034353	-3.28328276	0.563872099	89.22005463
F463	COMB3	0	0.798027754	-82.9655228	-0.85597068	-0.95332766	-1.61674726	-88.3295135
F463	COMB3	0.75	0.798027754	-75.4764099	-0.85597068	-0.95332766	-0.97477001	-28.3675327
F463	COMB3	1.5	0.798027754	-59.2460556	-0.85597068	-0.95332766	-0.33279273	22.69965935
F463	COMB3	2.25	0.798027754	-43.0157013	-0.85597068	-0.95332766	0.309184521	60.50144577
F463	COMB3	3	0.798027754	-35.5265884	-0.85597068	-0.95332766	0.951161742	89.40844727
F464	D	0	1.944341421	-81.2979889	-0.04183388	-0.1488384	-0.07644523	-103.640404
F464	D	0.75	1.944341421	-74.5873718	-0.04183388	-0.1488384	-0.04506985	-44.7158852
F464	D	1.5	1.944341421	-60.3955154	-0.04183388	-0.1488384	-0.01369448	6.37021637
F464	D	2.25	1.944341421	-46.2036629	-0.04183388	-0.1488384	0.017680893	45.877285
F464	D	3	1.944341421	-39.493042	-0.04183388	-0.1488384	0.049056266	77.54593658
F464	L	0	0.78566438	-24.5285969	-0.02289381	0.069193847	-0.04162657	-32.0903091

F464	L	0.75	0.78566438	-23.1223469	-0.02289381	0.069193847	-0.02445623	-14.0454426
F464	L	1.5	0.78566438	-18.9036026	-0.02289381	0.069193847	-0.0072859	1.890051842
F464	L	2.25	0.78566438	-14.6848583	-0.02289381	0.069193847	0.009884441	14.30992889
F464	L	3	0.78566438	-13.2786093	-0.02289381	0.069193847	0.027054779	24.62043762
F464	EX	0	2.723244905	-0.07693527	0.02754808	-3.22646737	-0.01533035	-0.19403587
F464	EX	0.75	2.723244905	-0.07693527	0.02754808	-3.22646737	-0.03599139	-0.13633449
F464	EX	1.5	2.723244905	-0.07693527	0.02754808	-3.22646737	-0.05665242	-0.0786331
F464	EX	2.25	2.723244905	-0.07693527	0.02754808	-3.22646737	-0.07731347	-0.02093171
F464	EX	3	2.723244905	-0.07693527	0.02754808	-3.22646737	-0.0979745	0.036769673
F464	EY	0	-0.55112267	9.624711037	0.771857262	0.000582011	1.468230367	29.09929466
F464	EY	0.75	-0.55112267	9.624711037	0.771857262	0.000582011	0.889338136	21.88076973
F464	EY	1.5	-0.55112267	9.624711037	0.771857262	0.000582011	0.310445845	14.6622467
F464	EY	2.25	-0.55112267	9.624711037	0.771857262	0.000582011	-0.26844645	7.443721771
F464	EY	3	-0.55112267	9.624711037	0.771857262	0.000582011	-0.84733874	0.225197434
F464	COMB1	0	3.590272665	-136.803345	-0.08683075	-0.06789592	-0.15833679	-175.712982
F464	COMB1	0.75	3.590272665	-126.500603	-0.08683075	-0.06789592	-0.0932138	-76.1317673
F464	COMB1	1.5	3.590272665	-102.720383	-0.08683075	-0.06789592	-0.02809081	10.66834259
F464	COMB1	2.25	3.590272665	-78.9401627	-0.08683075	-0.06789592	0.03703218	77.94863129
F464	COMB1	3	3.590272665	-68.6374283	-0.08683075	-0.06789592	0.102155164	132.4478149
F464	COMB2	0	4.933997631	-90.1372452	0.220510185	-3.4736948	0.353245795	-109.965424
F464	COMB2	0.75	4.933997631	-82.6481247	0.220510185	-3.4736948	0.187863365	-44.6246567
F464	COMB2	1.5	4.933997631	-66.4177704	0.220510185	-3.4736948	0.022480924	11.82131577
F464	COMB2	2.25	4.933997631	-50.1874199	0.220510185	-3.4736948	-0.14290152	55.00188446
F464	COMB2	3	4.933997631	-42.6982994	0.220510185	-3.4736948	-0.30828398	89.28766632
F464	COMB3	0	2.568186045	-83.0076904	0.767990649	-1.15021038	1.443433046	-88.4377365
F464	COMB3	0.75	2.568186045	-75.5185623	0.767990649	-1.15021038	0.867440701	-28.4441299
F464	COMB3	1.5	2.568186045	-59.2882156	0.767990649	-1.15021038	0.291448355	22.65468216
F464	COMB3	2.25	2.568186045	-43.0578613	0.767990649	-1.15021038	-0.28454396	60.48809052
F464	COMB3	3	2.568186045	-35.5687447	0.767990649	-1.15021038	-0.86053628	89.42671204
F465	D	0	2.322516441	-83.2890778	-0.05976144	1.682836652	-0.12454944	-106.118172
F465	D	0.75	2.322516441	-76.5784607	-0.05976144	1.682836652	-0.07972842	-45.7003326
F465	D	1.5	2.322516441	-62.3866043	-0.05976144	1.682836652	-0.03490739	6.879083157
F465	D	2.25	2.322516441	-48.1947517	-0.05976144	1.682836652	0.00991364	47.87946701
F465	D	3	2.322516441	-41.4841309	-0.05976144	1.682836652	0.05473467	81.04142761
F465	L	0	0.981931746	-34.9977417	-0.04054797	0.539532125	-0.06825247	-43.1975937
F465	L	0.75	0.981931746	-32.3258705	-0.04054797	0.539532125	-0.03784152	-17.6172848
F465	L	1.5	0.981931746	-24.3102531	-0.04054797	0.539532125	-0.00743058	3.955219746
F465	L	2.25	0.981931746	-16.2946377	-0.04054797	0.539532125	0.022980357	18.84805298
F465	L	3	0.981931746	-13.6227655	-0.04054797	0.539532125	0.053391296	29.73308372
F465	EX	0	0.228132144	0.170334518	0.438762486	-3.37448025	0.701526761	0.098548263
F465	EX	0.75	0.228132144	0.170334518	0.438762486	-3.37448025	0.372455239	-0.02920248
F465	EX	1.5	0.228132144	0.170334518	0.438762486	-3.37448025	0.043383747	-0.15695323
F465	EX	2.25	0.228132144	0.170334518	0.438762486	-3.37448025	-0.28568774	-0.284704
F465	EX	3	0.228132144	0.170334518	0.438762486	-3.37448025	-0.61475921	-0.41245472
F465	EY	0	-13.7626162	10.38881588	1.07269907	0.000701774	2.015977859	31.40619659
F465	EY	0.75	-13.7626162	10.38881588	1.07269907	0.000701774	1.211454511	23.61459351
F465	EY	1.5	-13.7626162	10.38881588	1.07269907	0.000701774	0.406931162	15.82299042
F465	EY	2.25	-13.7626162	10.38881588	1.07269907	0.000701774	-0.39759219	8.031387329
F465	EY	3	-13.7626162	10.38881588	1.07269907	0.000701774	-1.20211554	0.239784405
F465	COMB1	0	4.358110905	-155.943283	-0.13659048	2.882655382	-0.25866327	-196.457962
F465	COMB1	0.75	4.358110905	-143.61554	-0.13659048	2.882655382	-0.15622054	-83.0280533
F465	COMB1	1.5	4.358110905	-113.76033	-0.13659048	2.882655382	-0.0537778	14.583251
F465	COMB1	2.25	4.358110905	-83.9051208	-0.13659048	2.882655382	0.048664939	87.61224365
F465	COMB1	3	4.358110905	-71.5773849	-0.13659048	2.882655382	0.151107669	144.8226471
F465	COMB2	0	-1.35115635	-95.0290527	0.716497242	-1.55543506	1.208836794	-115.036369
F465	COMB2	0.75	-1.35115635	-87.1412582	0.716497242	-1.55543506	0.671464443	-46.1264229
F465	COMB2	1.5	-1.35115635	-69.7148895	0.716497242	-1.55543506	0.134092107	13.29072666
F465	COMB2	2.25	-1.35115635	-52.2885246	0.716497242	-1.55543506	-0.40328023	58.44579315
F465	COMB2	3	-1.35115635	-44.4007378	0.716497242	-1.55543506	-0.94065255	94.10806274
F465	COMB3	0	-11.6309338	-87.5159149	1.189022064	0.874706626	2.18548131	-92.0237732
F465	COMB3	0.75	-11.6309338	-79.6281204	1.189022064	0.874706626	1.293715715	-28.7486706
F465	COMB3	1.5	-11.6309338	-62.2017517	1.189022064	0.874706626	0.40195021	25.03363228
F465	COMB3	2.25	-11.6309338	-44.7753868	1.189022064	0.874706626	-0.48981529	64.55384827
F465	COMB3	3	-11.6309338	-36.8875961	1.189022064	0.874706626	-1.38158083	94.58127594
F466	D	0	2.637263775	-89.6635361	0.015532228	-12.305418	0.011170697	-100.690872
F466	D	0.75	2.637263775	-75.4529266	0.015532228	-12.305418	-0.00047846	-38.3046875
F466	D	1.5	2.637263775	-53.7610817	0.015532228	-12.305418	-0.01212762	10.61808586
F466	D	2.25	2.637263775	-32.0692329	0.015532228	-12.305418	-0.02377678	42.33684158
F466	D	3	2.637263775	-17.8586235	0.015532228	-12.305418	-0.03542593	60.59218979
F466	L	0	0.772268593	-27.398819	-0.04513541	-4.44644308	-0.07111252	-31.7765102
F466	L	0.75	0.772268593	-24.7269478	-0.04513541	-4.44644308	-0.037261	-11.8953867
F466	L	1.5	0.772268593	-16.7113323	-0.04513541	-4.44644308	-0.00340948	3.977934361
F466	L	2.25	0.772268593	-8.69571686	-0.04513541	-4.44644308	0.030442035	13.17158318
F466	L	3	0.772268593	-6.02384472	-0.04513541	-4.44644308	0.064293556	18.3574276
F466	EX	0	0.388784736	-1.04872119	0.525589645	-2.6175921	0.837566078	-1.81738198
F466	EX	0.75	0.388784736	-1.04872119	0.525589645	-2.6175921	0.443374336	-1.03084195
F466	EX	1.5	0.388784736	-1.04872119	0.525589645	-2.6175921	0.049182564	-0.24430199
F466	EX	2.25	0.388784736	-1.04872119	0.525589645	-2.6175921	-0.34500918	0.542238057
F466	EX	3	0.388784736	-1.04872119	0.525589645	-2.6175921	-0.73920095	1.328778028
F466	EY	0	-14.0026121	10.75258636	0.321770221	0.000106346	0.602409661	32.50835419
F466	EY	0.75	-14.0026121	10.75258636	0.321770221	0.000106346	0.361082256	24.44392395
F466	EY	1.5	-14.0026121	10.75258636	0.321770221	0.000106346	0.119754896	16.37949371
F466	EY	2.25	-14.0026121	10.75258636	0.321770221	0.000106346	-0.12157248	8.315063477
F466	EY	3	-14.0026121	10.75258636	0.321770221	0.000106346	-0.36289987	0.250633091

F468	COMB3	5	-1.01815152	45.63332367	0.663948238	-0.02136653	-1.66498005	-45.9033623
F469	D	0	-0.18177865	-39.4082108	0.002468875	3.04861E-05	0.008406984	-38.9379654
F469	D	1.25	-0.18177865	-26.7675915	0.002468875	3.04861E-05	0.005320889	4.586625099
F469	D	2.5	-0.18177865	0.00427939	0.002468875	3.04861E-05	0.002234795	21.53882408
F469	D	3.75	-0.18177865	26.77614975	0.002468875	3.04861E-05	-0.0008513	4.575926304
F469	D	5	-0.18177865	39.41677475	0.002468875	3.04861E-05	-0.00393739	-38.9593658
F469	L	0	0.132846609	-13.0710468	0.001983275	-0.00010966	0.005247333	-13.1443262
F469	L	1.25	0.132846609	-9.16479778	0.001983275	-0.00010966	0.002768239	1.566878915
F469	L	2.5	0.132846609	0.053953171	0.001983275	-0.00010966	0.000289146	7.345791817
F469	L	3.75	0.132846609	9.272703171	0.001983275	-0.00010966	-0.00218995	1.431995988
F469	L	5	0.132846609	13.17895317	0.001983275	-0.00010966	-0.00466904	-13.4140921
F469	EX	0	-2.75067616	1.305019617	0.247238055	-0.00147134	0.617866397	3.264708996
F469	EX	1.25	-2.75067616	1.305019617	0.247238055	-0.00147134	0.308818817	1.633434534
F469	EX	2.5	-2.75067616	1.305019617	0.247238055	-0.00147134	-0.00022876	0.00215995
F469	EX	3.75	-2.75067616	1.305019617	0.247238055	-0.00147134	-0.30927634	-1.62911451
F469	EX	5	-2.75067616	1.305019617	0.247238055	-0.00147134	-0.61832392	-3.26038909
F469	EY	0	-0.0221459	1.95663E-08	-8.1538E-06	-3.2002E-07	-0.01662308	-0.00028119
F469	EY	1.25	-0.0221459	1.95663E-08	-8.1538E-06	-3.2002E-07	-0.01661289	-0.00028121
F469	EY	2.5	-0.0221459	1.95663E-08	-8.1538E-06	-3.2002E-07	-0.01660269	-0.00028123
F469	EY	3.75	-0.0221459	1.95663E-08	-8.1538E-06	-3.2002E-07	-0.0165925	-0.00028126
F469	EY	5	-0.0221459	1.95663E-08	-8.1538E-06	-3.2002E-07	-0.01658231	-0.00028128
F469	COMB1	0	-0.00557981	-68.2035294	0.00613589	-0.00013888	0.018484112	-67.7564774
F469	COMB1	1.25	-0.00557981	-46.7847862	0.00613589	-0.00013888	0.01081425	8.010956764
F469	COMB1	2.5	-0.00557981	0.09146034	0.00613589	-0.00013888	0.003144388	37.59985733
F469	COMB1	3.75	-0.00557981	46.96770477	0.00613589	-0.00013888	-0.00452547	7.782305241
F469	COMB1	5	-0.00557981	68.38645172	0.00613589	-0.00013888	-0.01219534	-68.2137833
F469	COMB2	0	-3.00294662	-44.1453056	0.259105861	-0.00152547	0.644735694	-41.6464424
F469	COMB2	1.25	-3.00294662	-29.6421871	0.259105861	-0.00152547	0.320853353	7.000039577
F469	COMB2	2.5	-3.00294662	1.372183919	0.259105861	-0.00152547	-0.003029	24.93183708
F469	COMB2	3.75	-3.00294662	32.38655472	0.259105861	-0.00152547	-0.32691136	3.569579363
F469	COMB2	5	-3.00294662	46.88967896	0.259105861	-0.00152547	-0.65079367	-48.5073624
F469	COMB3	0	-1.03873706	-45.0849228	0.081088476	-0.00046634	0.187653914	-43.9972382
F469	COMB3	1.25	-1.03873706	-30.5818005	0.081088476	-0.00046634	0.086293325	5.823760033
F469	COMB3	2.5	-1.03873706	0.432569802	0.081088476	-0.00046634	-0.01506727	24.93007469
F469	COMB3	3.75	-1.03873706	31.44693947	0.081088476	-0.00046634	-0.11642788	4.74233532
F469	COMB3	5	-1.03873706	45.9500618	0.081088476	-0.00046634	-0.21778846	-46.1600876
F470	D	0	-0.14993195	-39.0797958	0.054069608	0.003842974	0.135098159	-38.671524
F470	D	1.25	-0.14993195	-26.4391747	0.054069608	0.003842974	0.067511149	4.442550659
F470	D	2.5	-0.14993195	0.332694769	0.054069608	0.003842974	-7.5864E-05	20.98423195
F470	D	3.75	-0.14993195	27.10456467	0.054069608	0.003842974	-0.06766288	3.610813856
F470	D	5	-0.14993195	39.74518967	0.054069608	0.003842974	-0.13524988	-40.3349953
F470	L	0	0.119369544	-13.2019825	0.012380358	0.000553449	0.031051548	-13.5547419
F470	L	1.25	0.119369544	-9.29573154	0.012380358	0.000553449	0.0155761	1.320131183
F470	L	2.5	0.119369544	-0.07698137	0.012380358	0.000553449	0.000100653	7.262712479
F470	L	3.75	0.119369544	9.141768456	0.012380358	0.000553449	-0.01537479	1.512584567
F470	L	5	0.119369544	13.04801941	0.012380358	0.000553449	-0.03085024	-13.169836
F470	EX	0	-2.11605597	1.237350583	0.016656928	-0.00140203	0.03927568	3.178463936
F470	EX	1.25	-2.11605597	1.237350583	0.016656928	-0.00140203	0.018454518	1.631775618
F470	EX	2.5	-2.11605597	1.237350583	0.016656928	-0.00140203	-0.00236664	0.085087165
F470	EX	3.75	-2.11605597	1.237350583	0.016656928	-0.00140203	-0.0231878	-1.46160114
F470	EX	5	-2.11605597	1.237350583	0.016656928	-0.00140203	-0.04400897	-3.00828958
F470	EY	0	-0.01447772	-0.00072814	-0.67921215	0.01536217	-1.70360112	-0.00185012
F470	EY	1.25	-0.01447772	-0.00072814	-0.67921215	0.01536217	-0.85458589	-0.00093994
F470	EY	2.5	-0.01447772	-0.00072814	-0.67921215	0.01536217	-0.00557065	-2.9756E-05
F470	EY	3.75	-0.01447772	-0.00072814	-0.67921215	0.01536217	0.843444586	0.000880424
F470	EY	5	-0.01447772	-0.00072814	-0.67921215	0.01536217	1.692459822	0.001790604
F470	COMB1	0	0.011072939	-68.0189285	0.084692106	0.005497087	0.211800262	-68.0934143
F470	COMB1	1.25	0.011072939	-46.6001778	0.084692106	0.005497087	0.105935141	7.443270683
F470	COMB1	2.5	0.011072939	0.276063532	0.084692106	0.005497087	7.00078E-05	36.8014183
F470	COMB1	3.75	0.011072939	47.15230942	0.084692106	0.005497087	-0.10579512	6.753111839
F470	COMB1	5	0.011072939	68.57106018	0.084692106	0.005497087	-0.21166025	-69.473732
F470	COMB2	0	-2.31450558	-43.9119835	-0.13603902	0.007597438	-0.34434971	-41.5857162
F470	COMB2	1.25	-2.31450558	-29.4088593	-0.13603902	0.007597438	-0.17430094	6.769111156
F470	COMB2	2.5	-2.31450558	1.605508924	-0.13603902	0.007597438	-0.00425218	24.40925407
F470	COMB2	3.75	-2.31450558	32.61987686	-0.13603902	0.007597438	0.165796593	2.755338907
F470	COMB2	5	-2.31450558	47.1230011	-0.13603902	0.007597438	0.335845351	-49.6132584
F470	COMB3	0	-0.80158633	-44.8034096	-0.64725298	0.019898096	-1.62477505	-43.8755684
F470	COMB3	1.25	-0.80158633	-30.3002872	-0.64725298	0.019898096	-0.81570882	5.593542099
F470	COMB3	2.5	-0.80158633	0.714081228	-0.64725298	0.019898096	-0.00664262	24.34796906
F470	COMB3	3.75	-0.80158633	31.72845078	-0.64725298	0.019898096	0.802423596	3.808338881
F470	COMB3	5	-0.80158633	46.23157501	-0.64725298	0.019898096	1.611489773	-47.4459724
F471	D	0	-0.09199435	-43.2335472	0.025996475	-0.00047884	0.064064674	-43.6939011
F471	D	1.25	-0.09199435	-30.5929241	0.025996475	-0.00047884	0.031569086	4.61235857
F471	D	2.5	-0.09199435	-3.82105541	0.025996475	-0.00047884	-0.00092651	26.34622765
F471	D	3.75	-0.09199435	22.95081329	0.025996475	-0.00047884	-0.03342211	14.1649971
F471	D	5	-0.09199435	35.59143448	0.025996475	-0.00047884	-0.06591771	-24.588623
F471	L	0	0.077177346	-14.1972666	0.005486708	0.000878726	0.0134834	-14.2498074
F471	L	1.25	0.077177346	-10.2910175	0.005486708	0.000878726	0.006625015	1.869172573
F471	L	2.5	0.077177346	-1.07226694	0.005486708	0.000878726	-0.00023337	9.055860519
F471	L	3.75	0.077177346	8.146483421	0.005486708	0.000878726	-0.00709175	4.549839973
F471	L	5	0.077177346	12.05273342	0.005486708	0.000878726	-0.01395014	-8.88847351
F471	EX	0	-1.1352787	1.789699078	0.038462121	-0.00106827	0.095057257	3.72927928
F471	EX	1.25	-1.1352787	1.789699078	0.038462121	-0.00106827	0.046979606	1.492155671
F471	EX	2.5	-1.1352787	1.789699078	0.038462121	-0.00106827	-0.00109804	-0.74496824

F471	EX	3.75	-1.1352787	1.789699078	0.038462121	-0.00106827	-0.04917569	-2.9820919
F471	EX	5	-1.1352787	1.789699078	0.038462121	-0.00106827	-0.09725334	-5.21921587
F471	EY	0	-0.0049122	-0.0001674	-0.28472888	0.007500437	-0.70235962	-0.00027179
F471	EY	1.25	-0.0049122	-0.0001674	-0.28472888	0.007500437	-0.34644851	-6.2531E-05
F471	EY	2.5	-0.0049122	-0.0001674	-0.28472888	0.007500437	0.009462626	0.000146723
F471	EY	3.75	-0.0049122	-0.0001674	-0.28472888	0.007500437	0.365373731	0.000355978
F471	EY	5	-0.0049122	-0.0001674	-0.28472888	0.007500437	0.721284866	0.000565232
F471	COMB1	0	0.013090535	-74.5958786	0.039974503	0.000831357	0.098451048	-75.2323761
F471	COMB1	1.25	0.013090535	-53.1771393	0.039974503	0.000831357	0.048482925	8.525506973
F471	COMB1	2.5	0.013090535	-6.30089378	0.039974503	0.000831357	-0.00148521	46.10485077
F471	COMB1	3.75	0.013090535	40.57535172	0.039974503	0.000831357	-0.05145333	24.27774048
F471	COMB1	5	0.013090535	61.99409485	0.039974503	0.000831357	-0.10142147	-43.7279053
F471	COMB2	0	-1.24884391	-48.0150757	-0.02085669	0.001030999	-0.05134384	-46.5075645
F471	COMB2	1.25	-1.24884391	-33.5119553	-0.02085669	0.001030999	-0.02527297	6.976127148
F471	COMB2	2.5	-1.24884391	-2.49758649	-0.02085669	0.001030999	0.000797901	29.74514008
F471	COMB2	3.75	-1.24884391	28.51678276	-0.02085669	0.001030999	0.026868768	13.22009373
F471	COMB2	5	-1.24884391	43.01990509	-0.02085669	0.001030999	0.052939627	-34.0196342
F471	COMB3	0	-0.4350538	-49.3037834	-0.25782514	0.007312974	-0.63601935	-49.1928482
F471	COMB3	1.25	-0.4350538	-34.800663	-0.25782514	0.007312974	-0.31373793	5.901729584
F471	COMB3	2.5	-0.4350538	-3.78629279	-0.25782514	0.007312974	0.008543524	30.28162384
F471	COMB3	3.75	-0.4350538	27.22807693	-0.25782514	0.007312974	0.330824971	15.36746216
F471	COMB3	5	-0.4350538	41.73119736	-0.25782514	0.007312974	0.653106391	-30.2613831
F472	D	0	2.237955332	17.8526783	0.068580367	-12.5228453	0.091191955	54.21249008
F472	D	0.75	2.237955332	30.19296837	0.068580367	-12.5228453	0.039756779	36.42919922
F472	D	1.5	2.237955332	46.27387238	0.068580367	-12.5228453	-0.01167839	7.987977028
F472	D	2.25	2.237955332	62.35477829	0.068580367	-12.5228453	-0.06311357	-32.981472
F472	D	3	2.237955332	74.69506836	0.068580367	-12.5228453	-0.11454874	-84.6088486
F472	L	0	0.354405582	6.054931164	-0.0373792	-4.48501253	-0.05667443	11.48987293
F472	L	0.75	0.354405582	6.758054733	-0.0373792	-4.48501253	-0.02864008	6.772902966
F472	L	1.5	0.354405582	8.867425919	-0.0373792	-4.48501253	-0.00060574	1.001249909
F472	L	2.25	0.354405582	10.9767971	-0.0373792	-4.48501253	0.027428608	-6.52820873
F472	L	3	0.354405582	11.6799202	-0.0373792	-4.48501253	0.055462953	-15.1123514
F472	EX	0	-0.0443005	-0.74996328	0.962042928	2.645255327	1.530792356	-1.34748578
F472	EX	0.75	-0.0443005	-0.74996328	0.962042928	2.645255327	0.809261501	-0.78501439
F472	EX	1.5	-0.0443005	-0.74996328	0.962042928	2.645255327	0.087730728	-0.22254308
F472	EX	2.25	-0.0443005	-0.74996328	0.962042928	2.645255327	-0.63380009	0.339928269
F472	EX	3	-0.0443005	-0.74996328	0.962042928	2.645255327	-1.35533082	0.9023996
F472	EY	0	-13.7178869	10.7524147	-0.31686133	0.000458639	-0.35838872	0.258133441
F472	EY	0.75	-13.7178869	10.7524147	-0.31686133	0.000458639	-0.12074322	-7.80616093
F472	EY	1.5	-13.7178869	10.7524147	-0.31686133	0.000458639	0.116902307	-15.8704567
F472	EY	2.25	-13.7178869	10.7524147	-0.31686133	0.000458639	0.354547828	-23.9347496
F472	EY	3	-13.7178869	10.7524147	-0.31686133	0.000458639	0.592193305	-31.9990463
F472	COMB1	0	3.252595186	31.11110497	0.022489719	-22.203434	0.018751258	83.43878174
F472	COMB1	0.75	3.252595186	47.04444885	0.022489719	-22.203434	0.001884004	54.55168152
F472	COMB1	1.5	3.252595186	69.71652985	0.022489719	-22.203434	-0.01498325	11.18757248
F472	COMB1	2.25	3.252595186	92.38861084	0.022489719	-22.203434	-0.03185051	-50.0229034
F472	COMB1	3	3.252595186	108.3219528	0.022489719	-22.203434	-0.04871776	-125.710388
F472	COMB2	0	-1.90549445	23.26341438	0.956138074	-11.8237829	1.549376726	59.22908783
F472	COMB2	0.75	-1.90549445	36.44220352	0.956138074	-11.8237829	0.832274497	37.11268997
F472	COMB2	1.5	-1.90549445	53.99160385	0.956138074	-11.8237829	0.115172409	3.473243713
F472	COMB2	2.25	-1.90549445	71.541008	0.956138074	-11.8237829	-0.60192978	-43.8745537
F472	COMB2	3	-1.90549445	84.71979523	0.956138074	-11.8237829	-1.31903183	-102.745399
F472	COMB3	0	-11.9562445	31.70641327	0.030574059	-13.7280293	0.18379052	60.38900757
F472	COMB3	0.75	-11.9562445	44.8852005	0.030574059	-13.7280293	0.160859987	31.94037247
F472	COMB3	1.5	-11.9562445	62.43460083	0.030574059	-13.7280293	0.137929484	-8.03131104
F472	COMB3	2.25	-11.9562445	79.98400879	0.030574059	-13.7280293	0.114998959	-61.7113419
F472	COMB3	3	-11.9562445	93.16279602	0.030574059	-13.7280293	0.092068441	-126.914429
F473	D	0	2.263263464	41.35060501	0.10742335	1.544748306	0.132418469	80.82257843
F473	D	0.75	2.263263464	48.06121445	0.10742335	1.544748306	0.05185112	47.76078415
F473	D	1.5	2.263263464	62.2530632	0.10742335	1.544748306	-0.02871623	6.860590458
F473	D	2.25	2.263263464	76.44490814	0.10742335	1.544748306	-0.10928357	-45.6186218
F473	D	3	2.263263464	83.15551758	0.10742335	1.544748306	-0.18985093	-105.936234
F473	L	0	0.727196217	13.69450188	-0.01211947	0.386426181	-0.02157926	25.40118599
F473	L	0.75	0.727196217	15.10074997	-0.01211947	0.386426181	-0.01248968	14.77876759
F473	L	1.5	0.727196217	19.31949043	-0.01211947	0.386426181	-0.00340009	2.046983957
F473	L	2.25	0.727196217	23.5382309	-0.01211947	0.386426181	0.005689499	-14.2004108
F473	L	3	0.727196217	24.94447899	-0.01211947	0.386426181	0.014779086	-32.5571709
F473	EX	0	-0.45889544	0.391828686	0.346089572	3.396120548	0.575374603	0.427679569
F473	EX	0.75	-0.45889544	0.391828686	0.346089572	3.396120548	0.315807968	0.133808658
F473	EX	1.5	-0.45889544	0.391828686	0.346089572	3.396120548	0.056241289	-0.16006225
F473	EX	2.25	-0.45889544	0.391828686	0.346089572	3.396120548	-0.20332536	-0.45393318
F473	EX	3	-0.45889544	0.391828686	0.346089572	3.396120548	-0.462892	-0.74780411
F473	EY	0	-13.3681364	10.38825512	-1.06314075	0.001360399	-1.19271111	0.247646183
F473	EY	0.75	-13.3681364	10.38825512	-1.06314075	0.001360399	-0.39535719	-7.54352903
F473	EY	1.5	-13.3681364	10.38825512	-1.06314075	0.001360399	0.401996791	-15.3347063
F473	EY	2.25	-13.3681364	10.38825512	-1.06314075	0.001360399	1.199350715	-23.1258812
F473	EY	3	-13.3681364	10.38825512	-1.06314075	0.001360399	1.996704817	-30.9170551
F473	COMB1	0	3.879430056	71.53192902	0.109516859	2.471979856	0.124375336	137.6289825
F473	COMB1	0.75	3.879430056	81.83465576	0.109516859	2.471979856	0.042237863	80.95896912
F473	COMB1	1.5	3.879430056	105.6148605	0.109516859	2.471979856	-0.03989962	11.50788307
F473	COMB1	2.25	3.879430056	129.3950653	0.109516859	2.471979856	-0.12203709	-77.4630051
F473	COMB1	3	3.879430056	139.6977844	0.109516859	2.471979856	-0.20417458	-179.214951
F473	COMB2	0	-2.08042645	51.40974808	0.132290244	5.259123325	0.352050632	93.38573456
F473	COMB2	0.75	-2.08042645	58.89885712	0.132290244	5.259123325	0.252833158	52.56641769

F473	COMB2	1.5	-2.08042645	75.12919617	0.132290244	5.259123325	0.153615654	2.852323055
F473	COMB2	2.25	-2.08042645	91.35953522	0.132290244	5.259123325	0.054398172	-60.1271553
F473	COMB2	3	-2.08042645	98.84864807	0.132290244	5.259123325	-0.04481927	-132.001404
F473	COMB3	0	-11.5756025	58.76299667	-0.89830267	2.814916372	-0.93886179	93.25982666
F473	COMB3	0.75	-11.5756025	66.25210571	-0.89830267	2.814916372	-0.26513612	46.92557907
F473	COMB3	1.5	-11.5756025	82.48244476	-0.89830267	2.814916372	0.408589572	-8.30344105
F473	COMB3	2.25	-11.5756025	98.71279144	-0.89830267	2.814916372	1.082315207	-76.7978439
F473	COMB3	3	-11.5756025	106.2019043	-0.89830267	2.814916372	1.75604105	-154.187027
F474	D	0	1.984945297	39.04136276	0.065722495	-0.06439085	0.081533127	77.60127258
F474	D	0.75	1.984945297	45.7519722	0.065722495	-0.06439085	0.032241352	46.27141571
F474	D	1.5	1.984945297	59.94381332	0.065722495	-0.06439085	-0.01705042	7.103150368
F474	D	2.25	1.984945297	74.13566589	0.065722495	-0.06439085	-0.0663422	-43.6441269
F474	D	3	1.984945297	80.8462677	0.065722495	-0.06439085	-0.11563397	-102.229813
F474	L	0	0.762305379	12.9793129	0.00015587	0.013591044	-0.00243751	24.43136215
F474	L	0.75	0.762305379	14.38555908	0.00015587	0.013591044	-0.00255442	14.34533691
F474	L	1.5	0.762305379	18.60430145	0.00015587	0.013591044	-0.00267132	2.149944305
F474	L	2.25	0.762305379	22.82304192	0.00015587	0.013591044	-0.00278822	-13.561059
F474	L	3	0.762305379	24.22929001	0.00015587	0.013591044	-0.00290512	-31.3814278
F474	EX	0	-2.5948379	0.00959305	-0.32400182	3.222500563	-0.33227816	-0.03175472
F474	EX	0.75	-2.5948379	0.00959305	-0.32400182	3.222500563	-0.0892773	-0.03894949
F474	EX	1.5	-2.5948379	0.00959305	-0.32400182	3.222500563	0.153723568	-0.04614427
F474	EX	2.25	-2.5948379	0.00959305	-0.32400182	3.222500563	0.396724433	-0.05333904
F474	EX	3	-2.5948379	0.00959305	-0.32400182	3.222500563	0.639725268	-0.06053381
F474	EY	0	-1.23026371	9.625453949	-0.76417351	0.000986669	-0.83966339	0.209836006
F474	EY	0.75	-1.23026371	9.625453949	-0.76417351	0.000986669	-0.26653436	-7.00924015
F474	EY	1.5	-1.23026371	9.625453949	-0.76417351	0.000986669	0.30659464	-14.2283173
F474	EY	2.25	-1.23026371	9.625453949	-0.76417351	0.000986669	0.879723608	-21.4473934
F474	EY	3	-1.23026371	9.625453949	-0.76417351	0.000986669	1.452852726	-28.6664696
F474	COMB1	0	3.601623058	67.616539	0.079116382	-0.05552335	0.093939729	132.2117157
F474	COMB1	0.75	3.601623058	77.91926575	0.079116382	-0.05552335	0.034602556	78.47824097
F474	COMB1	1.5	3.601623058	101.6994629	0.079116382	-0.05552335	-0.02473462	11.96369076
F474	COMB1	2.25	3.601623058	125.4796677	0.079116382	-0.05552335	-0.08407179	-74.0706482
F474	COMB1	3	3.601623058	135.7823944	0.079116382	-0.05552335	-0.14340897	-172.886063
F474	COMB2	0	-0.74887156	48.12386322	-0.50699884	3.272269487	-0.52355993	89.21044922
F474	COMB2	0.75	-0.74887156	55.61296844	-0.50699884	3.272269487	-0.14331156	50.85554504
F474	COMB2	1.5	-0.74887156	71.8433075	-0.50699884	3.272269487	0.236936793	3.605860949
F474	COMB2	2.25	-0.74887156	88.07365417	-0.50699884	3.272269487	0.617185116	-56.9092026
F474	COMB2	3	-0.74887156	95.5627594	-0.50699884	3.272269487	0.997433484	-126.319046
F474	COMB3	0	0.215167955	55.19166183	-0.83538508	0.952794433	-0.90147221	89.38754272
F474	COMB3	0.75	0.215167955	62.68077087	-0.83538508	0.952794433	-0.27493465	45.73179626
F474	COMB3	1.5	0.215167955	78.91110992	-0.83538508	0.952794433	0.351602912	-6.81872797
F474	COMB3	2.25	0.215167955	95.1414566	-0.83538508	0.952794433	0.978140414	-72.6346359
F474	COMB3	3	0.215167955	102.6305618	-0.83538508	0.952794433	1.604678035	-147.345322
F475	D	0	1.995942235	39.00352478	-0.07368058	0.139003411	-0.08997929	77.54212189
F475	D	0.75	1.995942235	45.71413422	-0.07368058	0.139003411	-0.03471896	46.24064255
F475	D	1.5	1.995942235	59.90597916	-0.07368058	0.139003411	0.020541361	7.100752831
F475	D	2.25	1.995942235	74.0978241	-0.07368058	0.139003411	0.075801685	-43.6181488
F475	D	3	1.995942235	80.80843353	-0.07368058	0.139003411	0.131062001	-102.175461
F475	L	0	0.796061397	13.10232544	-0.00941674	-0.07145637	-0.00866581	24.61977386
F475	L	0.75	0.796061397	14.50857353	-0.00941674	-0.07145637	-0.00160327	14.44148731
F475	L	1.5	0.796061397	18.727314	-0.00941674	-0.07145637	0.005459278	2.153835297
F475	L	2.25	0.796061397	22.94605637	-0.00941674	-0.07145637	0.012521822	-13.6494284
F475	L	3	0.796061397	24.35230255	-0.00941674	-0.07145637	0.019584365	-31.5620575
F475	EX	0	2.492663622	-0.00926633	-0.60707211	3.212385654	-0.75557411	0.036700368
F475	EX	0.75	2.492663622	-0.00926633	-0.60707211	3.212385654	-0.30027086	0.043650102
F475	EX	1.5	2.492663622	-0.00926633	-0.60707211	3.212385654	0.155032337	0.050599832
F475	EX	2.25	2.492663622	-0.00926633	-0.60707211	3.212385654	0.610335588	0.05754957
F475	EX	3	2.492663622	-0.00926633	-0.60707211	3.212385654	1.065638781	0.064499296
F475	EY	0	-1.23032677	9.625437737	0.764189124	-0.00098682	0.839680135	0.209834933
F475	EY	0.75	-1.23032677	9.625437737	0.764189124	-0.00098682	0.266539454	-7.00922966
F475	EY	1.5	-1.23032677	9.625437737	0.764189124	-0.00098682	-0.30660123	-14.2282934
F475	EY	2.25	-1.23032677	9.625437737	0.764189124	-0.00098682	-0.87974191	-21.4473591
F475	EY	3	-1.23032677	9.625437737	0.764189124	-0.00098682	-1.45288253	-28.6664219
F475	COMB1	0	3.668828964	67.76795197	-0.10348349	0.052473899	-0.12184044	132.4421844
F475	COMB1	0.75	3.668828964	78.07067871	-0.10348349	0.052473899	-0.04422798	78.59515381
F475	COMB1	1.5	3.668828964	101.8508759	-0.10348349	0.052473899	0.033384476	11.96704006
F475	COMB1	2.25	3.668828964	125.6310806	-0.10348349	0.052473899	0.110996932	-74.1808624
F475	COMB1	3	3.668828964	135.9338074	-0.10348349	0.052473899	0.188609391	-173.109833
F475	COMB2	0	4.538852692	48.10335541	-0.46793097	3.447953224	-0.61472791	89.27854156
F475	COMB2	0.75	4.538852692	55.59246445	-0.46793097	3.447953224	-0.26378036	50.93901443
F475	COMB2	1.5	4.538852692	71.82280731	-0.46793097	3.447953224	0.087167189	3.704707146
F475	COMB2	2.25	4.538852692	88.05314636	-0.46793097	3.447953224	0.438114762	-56.7949791
F475	COMB2	3	4.538852692	95.54225159	-0.46793097	3.447953224	0.789062321	-126.189445
F475	COMB3	0	1.839844584	55.1847229	0.53083998	1.134310126	0.546450317	89.40634155
F475	COMB3	0.75	1.839844584	62.67383194	0.53083998	1.134310126	0.148321152	45.75580215
F475	COMB3	1.5	1.839844584	78.9041748	0.53083998	1.134310126	-0.249808	-6.78952074
F475	COMB3	2.25	1.839844584	95.13451385	0.53083998	1.134310126	-0.64793712	-72.6002197
F475	COMB3	3	1.839844584	102.6236191	0.53083998	1.134310126	-1.04606628	-147.30571
F476	D	0	2.294443607	41.4946022	-0.11769904	-1.6760695	-0.1445799	81.04575348
F476	D	0.75	2.294443607	48.20521164	-0.11769904	-1.6760695	-0.0563058	47.87596512
F476	D	1.5	2.294443607	62.39705658	-0.11769904	-1.6760695	0.031968307	6.867774487
F476	D	2.25	2.294443607	76.58890533	-0.11769904	-1.6760695	0.120242417	-45.7194328
F476	D	3	2.294443607	83.29950714	-0.11769904	-1.6760695	0.208516508	-106.145042
F476	L	0	0.975038111	13.62251949	0.001644234	-0.5404402	0.009057655	29.73275566

F476	L	0.75	0.975038111	16.29438972	0.001644234	-0.5404402	0.007824482	18.84792137
F476	L	1.5	0.975038111	24.30999756	0.001644234	-0.5404402	0.006591309	3.955289602
F476	L	2.25	0.975038111	32.3256073	0.001644234	-0.5404402	0.005358136	-17.6170025
F476	L	3	0.975038111	34.99747849	0.001644234	-0.5404402	0.004124964	-43.1970901
F476	EX	0	0.249937341	-0.38201386	-0.54201472	3.363088608	-0.75382549	-0.41278848
F476	EX	0.75	0.249937341	-0.38201386	-0.54201472	3.363088608	-0.34731525	-0.12627865
F476	EX	1.5	0.249937341	-0.38201386	-0.54201472	3.363088608	0.059194975	0.160231173
F476	EX	2.25	0.249937341	-0.38201386	-0.54201472	3.363088608	0.465705216	0.446740985
F476	EX	3	0.249937341	-0.38201386	-0.54201472	3.363088608	0.87221539	0.733250797
F476	EY	0	-13.3681326	10.38825512	1.063133478	-0.00136061	1.192703962	0.247646138
F476	EY	0.75	-13.3681326	10.38825512	1.063133478	-0.00136061	0.395355374	-7.54352903
F476	EY	1.5	-13.3681326	10.38825512	1.063133478	-0.00136061	-0.40199316	-15.3347063
F476	EY	2.25	-13.3681326	10.38825512	1.063133478	-0.00136061	-1.19934165	-23.1258812
F476	EY	3	-13.3681326	10.38825512	1.063133478	-0.00136061	-1.99669015	-30.9170551
F476	COMB1	0	4.313393116	71.58955383	-0.13860807	-2.87598777	-0.15900363	144.8273163
F476	COMB1	0.75	4.313393116	83.9172821	-0.13860807	-2.87598777	-0.05504778	87.60783386
F476	COMB1	1.5	4.313393116	113.7724686	-0.13860807	-2.87598777	0.048908062	14.56979275
F476	COMB1	2.25	4.313393116	143.627655	-0.13860807	-2.87598777	0.15286392	-83.0505219
F476	COMB1	3	4.313393116	155.955368	-0.13860807	-2.87598777	0.256819755	-196.489395
F476	COMB2	0	-1.23597383	50.73734283	-0.34916425	1.550256491	-0.55346334	94.11463165
F476	COMB2	0.75	-1.23597383	58.62512207	-0.34916425	1.550256491	-0.29159072	53.69995117
F476	COMB2	1.5	-1.23597383	76.05147552	-0.34916425	1.550256491	-0.02971805	3.792486191
F476	COMB2	2.25	-1.23597383	93.47782898	-0.34916425	1.550256491	0.232154608	-60.3770332
F476	COMB2	3	-1.23597383	101.3656082	-0.34916425	1.550256491	0.494027227	-134.039337
F476	COMB3	0	-11.2415066	58.64775848	0.8224895	-0.87216741	0.865928352	94.59385681
F476	COMB3	0.75	-11.2415066	66.53553772	0.8224895	-0.87216741	0.249062464	48.24637604
F476	COMB3	1.5	-11.2415066	83.96189117	0.8224895	-0.87216741	-0.36780339	-7.59388924
F476	COMB3	2.25	-11.2415066	101.3882446	0.8224895	-0.87216741	-0.98466927	-77.6962128
F476	COMB3	3	-11.2415066	109.2760239	0.8224895	-0.87216741	-1.60153508	-157.291306
F477	D	0	2.611267328	17.73281288	-0.07646212	12.28320599	-0.10134364	60.59170532
F477	D	0.75	2.611267328	31.94340897	-0.07646212	12.28320599	-0.04399716	42.43073654
F477	D	1.5	2.611267328	53.63523865	-0.07646212	12.28320599	0.013349308	10.80638695
F477	D	2.25	2.611267328	75.32706451	-0.07646212	12.28320599	0.07069578	-38.0219574
F477	D	3	2.611267328	89.53766632	-0.07646212	12.28320599	0.128042251	-100.313683
F477	L	0	0.766781926	6.028888702	0.03204193	4.442029953	0.050343413	18.35830688
F477	L	0.75	0.766781926	8.700758934	0.03204193	4.442029953	0.026312014	13.16868305
F477	L	1.5	0.766781926	16.71636772	0.03204193	4.442029953	0.002280613	3.971263885
F477	L	2.25	0.766781926	24.73197556	0.03204193	4.442029953	-0.02175079	-11.905817
F477	L	3	0.766781926	27.40384674	0.03204193	4.442029953	-0.04578219	-31.7906952
F477	EX	0	0.350322604	0.740977824	-0.609689	2.601624012	-0.83645433	1.327709675
F477	EX	0.75	0.350322604	0.740977824	-0.609689	2.601624012	-0.37918845	0.771977425
F477	EX	1.5	0.350322604	0.740977824	-0.609689	2.601624012	0.078077406	0.216245174
F477	EX	2.25	0.350322604	0.740977824	-0.609689	2.601624012	0.535343289	-0.33948711
F477	EX	3	0.350322604	0.740977824	-0.609689	2.601624012	0.992609084	-0.89521939
F477	EY	0	-13.7178841	10.75241852	0.316857994	-0.00045889	0.358384997	0.258133531
F477	EY	0.75	-13.7178841	10.75241852	0.316857994	-0.00045889	0.120741963	-7.80616426
F477	EY	1.5	-13.7178841	10.75241852	0.316857994	-0.00045889	-0.11690107	-15.8704615
F477	EY	2.25	-13.7178841	10.75241852	0.316857994	-0.00045889	-0.3545441	-23.9347591
F477	EY	3	-13.7178841	10.75241852	0.316857994	-0.00045889	-0.59218711	-31.9990597
F477	COMB1	0	4.360372066	30.92559814	-0.04048745	21.84709549	-0.0410629	102.0833359
F477	COMB1	0.75	4.360372066	52.25330353	-0.04048745	21.84709549	-0.01069738	71.98677826
F477	COMB1	1.5	4.360372066	91.10847473	-0.04048745	21.84709549	0.019668151	19.32168579
F477	COMB1	2.25	4.360372066	129.9636383	-0.04048745	21.84709549	0.050033674	-64.6756516
F477	COMB1	3	4.360372066	151.2913513	-0.04048745	21.84709549	0.0803992	-171.241531
F477	COMB2	0	-0.97518271	24.672[illegible]7772	-0.60140991	16.98914146	-0.8433916	70.85964966
F477	COMB2	0.75	-0.97518271	40.4352417	-0.60140991	16.98914146	-0.39233506	47.04046631
F477	COMB2	1.5	-0.97518271	65.7365799	-0.60140991	16.98914146	0.058721446	7.822272778
F477	COMB2	2.25	-0.97518271	91.03791809	-0.60140991	16.98914146	0.509777963	-51.5642052
F477	COMB2	3	-0.97518271	106.8006821	-0.60140991	16.98914146	0.960834444	-126.349693
F477	COMB3	0	-11.3100605	32.04199982	0.07045684	15.11563492	0.022268483	70.09342957
F477	COMB3	0.75	-11.3100605	47.80476379	0.07045684	15.11563492	-0.03057404	40.74710846
F477	COMB3	1.5	-11.3100605	73.10610199	0.07045684	15.11563492	-0.08341657	-3.99821281
F477	COMB3	2.25	-11.3100605	98.40744019	0.07045684	15.11563492	-0.13625911	-68.9118195
F477	COMB3	3	-11.3100605	114.1702118	0.07045684	15.11563492	-0.18910165	-149.224442
F478	D	0	-0.71716183	-40.5904922	-0.03325719	-0.02687587	-0.09364107	-31.5587292
F478	D	1.25	-0.71716183	-26.149868	-0.03325719	-0.02687587	-0.0520696	12.31870937
F478	D	2.5	-0.71716183	2.422002316	-0.03325719	-0.02687587	-0.01049812	27.37375641
F478	D	3.75	-0.71716183	30.99387169	-0.03325719	-0.02687587	0.031073367	6.263703346
F478	D	5	-0.71716183	45.43449402	-0.03325719	-0.02687587	0.072644845	-43.6687393
F478	L	0	0.996442974	-12.816576	-0.00117241	-0.0057962	-0.00466625	-11.1888714
F478	L	1.25	0.996442974	-8.910326	-0.00117241	-0.0057962	-0.00320073	3.204245567
F478	L	2.5	0.996442974	0.308424056	-0.00117241	-0.0057962	-0.00173522	8.665070534
F478	L	3.75	0.996442974	9.527173996	-0.00117241	-0.0057962	-0.0002697	2.433185339
F478	L	5	0.996442974	13.43342495	-0.00117241	-0.0057962	0.001195813	-12.7309914
F478	EX	0	-36.3590927	15.10921288	0.023806525	0.004661249	0.047938123	40.05102921
F478	EX	1.25	-36.3590927	15.10921288	0.023806525	0.004661249	0.018179966	21.16451454
F478	EX	2.5	-36.3590927	15.10921288	0.023806525	0.004661249	-0.01157819	2.277997255
F478	EX	3.75	-36.3590927	15.10921288	0.023806525	0.004661249	-0.04133635	-16.6085205
F478	EX	5	-36.3590927	15.10921288	0.023806525	0.004661249	-0.07109451	-35.4950333
F478	EY	0	0.014594713	-0.00029341	0.432626218	0.047654904	1.246047735	-0.00112191
F478	EY	1.25	0.014594713	-0.00029341	0.432626218	0.047654904	0.705264926	-0.00075515
F478	EY	2.5	0.014594713	-0.00029341	0.432626218	0.047654904	0.164482206	-0.00038839
F478	EY	3.75	0.014594713	-0.00029341	0.432626218	0.047654904	-0.37630054	-2.1627E-05
F478	EY	5	0.014594713	-0.00029341	0.432626218	0.047654904	-0.91708332	0.000345136

F478	COMB1	0	0.733714581	-69.2151108	-0.04178448	-0.04152496	-0.11983529	-55.7726707
F478	COMB1	1.25	0.733714581	-45.636364	-0.04178448	-0.04152496	-0.06760469	19.90924454
F478	COMB1	2.5	0.733714581	3.399881124	-0.04178448	-0.04152496	-0.01537409	46.71261978
F478	COMB1	3.75	0.733714581	52.43612671	-0.04178448	-0.04152496	0.036856517	11.40954113
F478	COMB1	5	0.733714581	76.01486969	-0.04178448	-0.04152496	0.089087121	-72.7720718
F478	COMB2	0	-38.0662041	-31.0192966	0.125627652	-0.01020978	0.342328012	4.79130125
F478	COMB2	1.25	-38.0662041	-14.6261711	0.125627652	-0.01020978	0.185293421	35.84901428
F478	COMB2	2.5	-38.0662041	18.27819824	0.125627652	-0.01020978	0.028258853	33.82954788
F478	COMB2	3.75	-38.0662041	51.1825676	0.125627652	-0.01020978	-0.12877572	-9.84648228
F478	COMB2	5	-38.0662041	67.57569122	0.125627652	-0.01020978	-0.28581029	-86.5996933
F478	COMB3	0	-11.8769293	-41.8981438	0.42646721	0.021460481	1.223657608	-24.0462646
F478	COMB3	1.25	-11.8769293	-25.5050201	0.42646721	0.021460481	0.690573573	20.61001015
F478	COMB3	2.5	-11.8769293	7.399349689	0.42646721	0.021460481	0.157489568	32.18910217
F478	COMB3	3.75	-11.8769293	40.30371857	0.42646721	0.021460481	-0.37559444	2.111635685
F478	COMB3	5	-11.8769293	56.69684219	0.42646721	0.021460481	-0.90867853	-61.0430145
F479	D	0	-1.27487218	-42.3874512	-0.10121901	0.019500729	-0.24744415	-40.523365
F479	D	1.25	-1.27487218	-27.9468288	-0.10121901	0.019500729	-0.12092041	5.600274563
F479	D	2.5	-1.27487218	0.62504065	-0.10121901	0.019500729	0.005603346	22.90152359
F479	D	3.75	-1.27487218	29.19691086	-0.10121901	0.019500729	0.132127106	4.03767252
F479	D	5	-1.27487218	43.6375351	-0.10121901	0.019500729	0.258650839	-43.648571
F479	L	0	1.022182941	-12.9406729	-0.01767548	0.008704232	-0.04354601	-12.7322998
F479	L	1.25	1.022182941	-9.03442192	-0.01767548	0.008704232	-0.02145166	1.815937042
F479	L	2.5	1.022182941	0.184327886	-0.01767548	0.008704232	0.000642686	7.431881428
F479	L	3.75	1.022182941	9.403078079	-0.01767548	0.008704232	0.022737034	1.355117202
F479	L	5	1.022182941	13.30932808	-0.01767548	0.008704232	0.04483138	-13.6539392
F479	EX	0	-26.9450397	13.37252426	-0.07323948	0.010547217	-0.12902947	33.27993774
F479	EX	1.25	-26.9450397	13.37252426	-0.07323948	0.010547217	-0.0374801	16.56428337
F479	EX	2.5	-26.9450397	13.37252426	-0.07323948	0.010547217	0.054069262	-0.15137196
F479	EX	3.75	-26.9450397	13.37252426	-0.07323948	0.010547217	0.145618618	-16.8670273
F479	EX	5	-26.9450397	13.37252426	-0.07323948	0.010547217	0.237167969	-33.5826797
F479	EY	0	-0.0341752	-0.00088302	1.320550323	0.098803312	3.24010253	-0.00192079
F479	EY	1.25	-0.0341752	-0.00088302	1.320550323	0.098803312	1.589414716	-0.00081701
F479	EY	2.5	-0.0341752	-0.00088302	1.320550323	0.098803312	-0.06127318	0.000286761
F479	EY	3.75	-0.0341752	-0.00088302	1.320550323	0.098803312	-1.71196103	0.001390536
F479	EY	5	-0.0341752	-0.00088302	1.320550323	0.098803312	-3.36264896	0.002494311
F479	COMB1	0	0.105646044	-71.5700226	-0.14974357	0.037327647	-0.36660659	-68.9997177
F479	COMB1	1.25	0.105646044	-47.991272	-0.14974357	0.037327647	-0.17942715	9.625828743
F479	COMB1	2.5	0.105646044	1.044973373	-0.14974357	0.037327647	0.007752314	39.37283707
F479	COMB1	3.75	0.105646044	50.08121872	-0.14974357	0.037327647	0.19493179	7.013394833
F479	COMB1	5	0.105646044	73.65996552	-0.14974357	0.037327647	0.382111222	-74.2245865
F479	COMB2	0	-28.9155102	-34.7428513	0.228322744	0.065257013	0.613553464	-12.1160784
F479	COMB2	1.25	-28.9155102	-18.3497295	0.228322744	0.065257013	0.328150034	23.59608459
F479	COMB2	2.5	-28.9155102	14.55464077	0.228322744	0.065257013	0.042746592	26.23106194
F479	COMB2	3.75	-28.9155102	47.45901108	0.228322744	0.065257013	-0.24265684	-12.7905159
F479	COMB2	5	-28.9155102	63.8521347	0.228322744	0.065257013	-0.52806032	-84.8892746
F479	COMB3	0	-9.54020023	-44.3717194	1.251659632	0.130283445	3.087930202	-36.0790443
F479	COMB3	1.25	-9.54020023	-27.9785957	1.251659632	0.130283445	1.523355603	11.66919994
F479	COMB3	2.5	-9.54020023	4.925774097	1.251659632	0.130283445	-0.04121906	26.34026146
F479	COMB3	3.75	-9.54020023	37.83014297	1.251659632	0.130283445	-1.6057936	-0.645235
F479	COMB3	5	-9.54020023	54.2232666	1.251659632	0.130283445	-3.17036843	-60.7079124
F480	D	0	-1.37625217	-42.9052925	0.004324754	-0.00022263	0.035058584	-41.8877525
F480	D	1.25	-1.37625217	-28.4646721	0.004324754	-0.00022263	0.02965264	4.883188725
F480	D	2.5	-1.37625217	0.107199356	0.004324754	-0.00022263	0.024246698	22.83173943
F480	D	3.75	-1.37625217	28.67906952	0.004324754	-0.00022263	0.018840756	4.615190029
F480	D	5	-1.37625217	43.11968994	0.004324754	-0.00022263	0.013434811	-42.4237518
F480	L	0	0.852596104	-12.9678755	0.003440092	0.000176876	0.01334107	-12.9304686
F480	L	1.25	0.852596104	-9.06162548	0.003440092	0.000176876	0.009040956	1.651771784
F480	L	2.5	0.852596104	0.157124996	0.003440092	0.000176876	0.004740841	7.301720142
F480	L	3.75	0.852596104	9.375875473	0.003440092	0.000176876	0.000440727	1.258959174
F480	L	5	0.852596104	13.28212452	0.003440092	0.000176876	-0.00385939	-13.716094
F480	EX	0	-19.3895569	13.42363167	0.449910343	0.008246741	1.124825358	33.57884598
F480	EX	1.25	-19.3895569	13.42363167	0.449910343	0.008246741	0.562437475	16.79930878
F480	EX	2.5	-19.3895569	13.42363167	0.449910343	0.008246741	4.95367E-05	0.019769235
F480	EX	3.75	-19.3895569	13.42363167	0.449910343	0.008246741	-0.56233841	-16.7597713
F480	EX	5	-19.3895569	13.42363167	0.449910343	0.008246741	-1.1247263	-33.5393105
F480	EY	0	-0.08879706	-2.7075E-07	-1.7123E-05	2.0682E-06	-0.34409979	0.001010692
F480	EY	1.25	-0.08879706	-2.7075E-07	-1.7123E-05	2.0682E-06	-0.34407836	0.001011031
F480	EY	2.5	-0.08879706	-2.7075E-07	-1.7123E-05	2.0682E-06	-0.34405696	0.001011369
F480	EY	3.75	-0.08879706	-2.7075E-07	-1.7123E-05	2.0682E-06	-0.34403557	0.001011707
F480	EY	5	-0.08879706	-2.7075E-07	-1.7123E-05	2.0682E-06	-0.34401417	0.001012046
F480	COMB1	0	-0.28734884	-72.2349548	0.010693852	1.5852E-05	0.063416012	-70.9540558
F480	COMB1	1.25	-0.28734884	-48.656208	0.010693852	1.5852E-05	0.050048698	8.502660751
F480	COMB1	2.5	-0.28734884	0.380039215	0.010693852	1.5852E-05	0.036681384	39.08083725
F480	COMB1	3.75	-0.28734884	49.41628647	0.010693852	1.5852E-05	0.02331407	7.552562714
F480	COMB1	5	-0.28734884	72.99502563	0.010693852	1.5852E-05	0.009946753	-72.8542557
F480	COMB2	0	-21.2726593	-35.2419777	0.471276432	0.008357989	1.096816778	-13.3008137
F480	COMB2	1.25	-21.2726593	-18.8488579	0.471276432	0.008357989	0.507721245	23.03525925
F480	COMB2	2.5	-21.2726593	14.05551243	0.471276432	0.008357989	-0.08137428	26.29414749
F480	COMB2	3.75	-21.2726593	46.95988464	0.471276432	0.008357989	-0.67046982	-12.1035223
F480	COMB2	5	-21.2726593	63.35300446	0.471276432	0.008357989	-1.25956535	-83.5783768
F480	COMB3	0	-7.37744427	-44.9069939	0.147328407	0.002421855	0.034029178	-37.476841
F480	COMB3	1.25	-7.37744427	-28.5138741	0.147328407	0.002421855	-0.1501313	10.94050026
F480	COMB3	2.5	-7.37744427	4.390497208	0.147328407	0.002421855	-0.33429182	26.28065681
F480	COMB3	3.75	-7.37744427	37.29486847	0.147328407	0.002421855	-0.51845229	-0.03574381

F480	COMB3	5	-7.37744427	53.68798828	0.147328407	0.002421855	-0.70261282	-59.4293289
F481	D	0	-1.45493197	-43.3387222	0.108561784	-0.01894078	0.276817411	-43.018055
F481	D	1.25	-1.45493197	-28.8981018	0.108561784	-0.01894078	0.141115174	4.294672489
F481	D	2.5	-1.45493197	-0.32623041	0.108561784	-0.01894078	0.005412942	22.78501129
F481	D	3.75	-1.45493197	28.24563789	0.108561784	-0.01894078	-0.1302893	5.110248566
F481	D	5	-1.45493197	42.68626022	0.108561784	-0.01894078	-0.26599154	-41.3869019
F481	L	0	0.990297377	-13.5175819	0.024648163	-0.01109196	0.062437028	-14.2228594
F481	L	1.25	0.990297377	-9.61133099	0.024648163	-0.01109196	0.031626821	1.046513677
F481	L	2.5	0.990297377	-0.39258108	0.024648163	-0.01109196	0.000816614	7.383594513
F481	L	3.75	0.990297377	8.826169014	0.024648163	-0.01109196	-0.02999359	2.027966261
F481	L	5	0.990297377	12.73241901	0.024648163	-0.01109196	-0.0608038	-12.2599545
F481	EX	0	-12.3787251	13.29122162	-0.07784966	0.010158838	-0.24780585	33.40844727
F481	EX	1.25	-12.3787251	13.29122162	-0.07784966	0.010158838	-0.15049376	16.79442024
F481	EX	2.5	-12.3787251	13.29122162	-0.07784966	0.010158838	-0.05318168	0.180392891
F481	EX	3.75	-12.3787251	13.29122162	-0.07784966	0.010158838	0.044130407	-16.4336338
F481	EX	5	-12.3787251	13.29122162	-0.07784966	0.010158838	0.141442493	-33.0476608
F481	EY	0	-0.03417401	0.000882542	-1.32054138	-0.09880536	-3.36262131	0.002493138
F481	EY	1.25	-0.03417401	0.000882542	-1.32054138	-0.09880536	-1.71194446	0.001389961
F481	EY	2.5	-0.03417401	0.000882542	-1.32054138	-0.09880536	-0.06126779	0.000286783
F481	EY	3.75	-0.03417401	0.000882542	-1.32054138	-0.09880536	1.589408994	-0.00081639
F481	EY	5	-0.03417401	0.000882542	-1.32054138	-0.09880536	3.240085602	-0.00191957
F481	COMB1	0	-0.16144253	-73.6345978	0.169711202	-0.04047607	0.43208015	-74.3782425
F481	COMB1	1.25	-0.16144253	-50.055851	0.169711202	-0.04047607	0.219941124	6.828028679
F481	COMB1	2.5	-0.16144253	-1.01960623	0.169711202	-0.04047607	0.007802114	39.15576553
F481	COMB1	3.75	-0.16144253	48.01663589	0.169711202	-0.04047607	-0.20433691	9.377044678
F481	COMB1	5	-0.16144253	71.59538269	0.169711202	-0.04047607	-0.41647592	-69.2802124
F481	COMB2	0	-14.0384798	-36.0070038	-0.37479088	-0.04399108	-1.00537884	-15.0706339
F481	COMB2	1.25	-14.0384798	-19.613884	-0.37479088	-0.04399108	-0.53689015	22.22171974
F481	COMB2	2.5	-14.0384798	13.29048729	-0.37479088	-0.04399108	-0.06840157	26.43689156
F481	COMB2	3.75	-14.0384798	46.19485474	-0.37479088	-0.04399108	0.400087059	-11.0044985
F481	COMB2	5	-14.0384798	62.58797836	-0.37479088	-0.04399108	0.868575633	-81.5230713
F481	COMB3	0	-5.1509161	-45.5760345	-1.28933704	-0.12392738	-3.29848528	-39.1228828
F481	COMB3	1.25	-5.1509161	-29.1829147	-1.28933704	-0.12392738	-1.68681383	10.13075924
F481	COMB3	2.5	-5.1509161	3.721456289	-1.28933704	-0.12392738	-0.07514258	26.30721855
F481	COMB3	3.75	-5.1509161	36.62582397	-1.28933704	-0.12392738	1.536528707	0.827118456
F481	COMB3	5	-5.1509161	53.0189476	-1.28933704	-0.12392738	3.148200035	-57.7301636
F482	D	0	-0.86673033	-45.826973	0.040200867	0.023407841	0.088960432	-44.7107582
F482	D	1.25	-0.86673033	-31.3863544	0.040200867	0.023407841	0.038709346	5.71228838
F482	D	2.5	-0.86673033	-2.81448388	0.040200867	0.023407841	-0.01154174	27.3129425
F482	D	3.75	-0.86673033	25.75738525	0.040200867	0.023407841	-0.06179282	12.74849796
F482	D	5	-0.86673033	40.19800949	0.040200867	0.023407841	-0.1120439	-30.6383381
F482	L	0	1.012532115	-13.3874159	0.00936893	0.00480123	0.020701278	-12.575243
F482	L	1.25	1.012532115	-9.48116589	0.00936893	0.00480123	0.008990115	2.531423092
F482	L	2.5	1.012532115	-0.26241547	0.00936893	0.00480123	-0.00272105	8.705797195
F482	L	3.75	1.012532115	8.956335068	0.00936893	0.00480123	-0.01443221	3.187461615
F482	L	5	1.012532115	12.86258507	0.00936893	0.00480123	-0.02614337	-11.2631655
F482	EX	0	-4.75387478	14.9005785	0.019212486	0.004111281	0.054454621	35.06403732
F482	EX	1.25	-4.75387478	14.9005785	0.019212486	0.004111281	0.030439012	16.43831444
F482	EX	2.5	-4.75387478	14.9005785	0.019212486	0.004111281	0.006423402	-2.18740821
F482	EX	3.75	-4.75387478	14.9005785	0.019212486	0.004111281	-0.01759221	-20.8131332
F482	EX	5	-4.75387478	14.9005785	0.019212486	0.004111281	-0.04160782	-39.438858
F482	EY	0	0.014594879	0.000292823	-0.4326213	-0.0476555	-0.91707212	0.000343739
F482	EY	1.25	0.014594879	0.000292823	-0.4326213	-0.0476555	-0.37629554	-2.2289E-05
F482	EY	2.5	0.014594879	0.000292823	-0.4326213	-0.0476555	0.164481133	-0.00038832
F482	EY	3.75	0.014594879	0.000292823	-0.4326213	-0.0476555	0.705257773	-0.00075435
F482	EY	5	0.014594879	0.000292823	-0.4326213	-0.0476555	1.246034384	-0.00112037
F482	COMB1	0	0.579974949	-76.4122391	0.063231327	0.035771377	0.139874563	-73.7733002
F482	COMB1	1.25	0.579974949	-52.8334885	0.063231327	0.035771377	0.060835399	10.90502262
F482	COMB1	2.5	0.579974949	-3.79724526	0.063231327	0.035771377	-0.01820376	46.70480347
F482	COMB1	3.75	0.579974949	45.23899841	0.063231327	0.035771377	-0.09724292	20.39813614
F482	COMB1	5	0.579974949	68.81774902	0.063231327	0.035771377	-0.17628208	-54.7870712
F482	COMB2	0	-5.50678205	-36.9131699	-0.07122867	0.015334315	-0.13258784	-14.6161079
F482	COMB2	1.25	-5.50678205	-20.5200481	-0.07122867	0.015334315	-0.04355202	23.80895042
F482	COMB2	2.5	-5.50678205	12.38432217	-0.07122867	0.015334315	0.04548382	29.15682411
F482	COMB2	3.75	-5.50678205	45.28869247	-0.07122867	0.015334315	0.134519666	-7.1518569
F482	COMB2	5	-5.50678205	61.68181229	-0.07122867	0.015334315	0.223555475	-76.5377197
F482	COMB3	0	-2.07326508	-47.6413689	-0.40303832	-0.0226526	-0.8458432	-39.8619652
F482	COMB3	1.25	-2.07326508	-31.2482491	-0.40303832	-0.0226526	-0.34204534	11.97334671
F482	COMB3	2.5	-2.07326508	1.656120777	-0.40303832	-0.0226526	0.161752596	30.73147392
F482	COMB3	3.75	-2.07326508	34.56048965	-0.40303832	-0.0226526	0.66555053	7.833044052
F482	COMB3	5	-2.07326508	50.95361328	-0.40303832	-0.0226526	1.169348359	-48.1425667
F483	D	0	2.755184174	-78.4200897	-0.02871692	12.51513672	-0.02109994	-88.6596375
F483	D	0.75	2.755184174	-66.0796967	-0.02871692	12.51513672	0.000437893	-34.2380791
F483	D	1.5	2.755184174	-49.9986496	-0.02871692	12.51513672	0.02197572	9.525373459
F483	D	2.25	2.755184174	-33.9176102	-0.02871692	12.51513672	0.043513551	40.76038361
F483	D	3	2.755184174	-21.5772171	-0.02871692	12.51513672	0.065051377	61.33728409
F483	L	0	0.442483425	-12.3391275	0.037951611	4.40995121	0.060284149	-15.8107576
F483	L	0.75	0.442483425	-11.6359978	0.037951611	4.40995121	0.031820253	-6.73213482
F483	L	1.5	0.442483425	-9.52660942	0.037951611	4.40995121	0.003356358	1.291786551
F483	L	2.25	0.442483425	-7.41722107	0.037951611	4.40995121	-0.02510754	7.557872295
F483	L	3	0.442483425	-6.71409178	0.037951611	4.40995121	-0.05357143	12.76925755
F483	EX	0	0.195830077	1.191302896	-0.93579388	-2.59013224	-1.40393877	2.034991026
F483	EX	0.75	0.195830077	1.191302896	-0.93579388	-2.59013224	-0.70208877	1.141507864
F483	EX	1.5	0.195830077	1.191302896	-0.93579388	-2.59013224	-0.00023882	0.24802494

F485	COMB2	1.5	3.754910707	-70.741188	-0.30183238	-3.23367643	-0.11092556	13.7830925
F485	COMB2	2.25	3.754910707	-54.5107117	-0.30183238	-3.23367643	0.115450196	60.2065239
F485	COMB2	3	3.754910707	-47.0215416	-0.30183238	-3.23367643	0.341825932	97.73503113
F485	COMB3	0	5.005086422	-86.1169052	-0.74102658	-0.93104023	-1.45367169	-91.2966156
F485	COMB3	0.75	5.005086422	-78.6277313	-0.74102658	-0.93104023	-0.8978982	-28.9706402
F485	COMB3	1.5	5.005086422	-62.3972549	-0.74102658	-0.93104023	-0.34212467	24.46040726
F485	COMB3	2.25	5.005086422	-46.1667786	-0.74102658	-0.93104023	0.213648885	64.62584686
F485	COMB3	3	5.005086422	-38.6776085	-0.74102658	-0.93104023	0.769422412	95.8963623
F486	D	0	4.365602016	-85.7229385	-0.04785912	-0.15058631	-0.09610036	-108.701637
F486	D	0.75	4.365602016	-79.0122757	-0.04785912	-0.15058631	-0.06020578	-46.457943
F486	D	1.5	4.365602016	-64.8203125	-0.04785912	-0.15058631	-0.02431121	7.947207451
F486	D	2.25	4.365602016	-50.6283493	-0.04785912	-0.15058631	0.011583366	50.77314758
F486	D	3	4.365602016	-43.9176788	-0.04785912	-0.15058631	0.047477938	85.76055145
F486	L	0	1.429749608	-25.7777843	-0.02074798	0.072520971	-0.03676147	-33.306736
F486	L	0.75	1.429749608	-24.3715248	-0.02074798	0.072520971	-0.02120038	-14.3248415
F486	L	1.5	1.429749608	-20.1527481	-0.02074798	0.072520971	-0.0056393	2.547651768
F486	L	2.25	1.429749608	-15.9339705	-0.02074798	0.072520971	0.009921786	15.90447426
F486	L	3	1.429749608	-14.5277109	-0.02074798	0.072520971	0.025482873	27.15189552
F486	EX	0	1.232849002	-0.07593127	0.171514824	-3.18382311	0.235973954	-0.16545227
F486	EX	0.75	1.232849002	-0.07593127	0.171514824	-3.18382311	0.107337013	-0.10850345
F486	EX	1.5	1.232849002	-0.07593127	0.171514824	-3.18382311	-0.02129993	-0.05155463
F486	EX	2.25	1.232849002	-0.07593127	0.171514824	-3.18382311	-0.14993688	0.00539419
F486	EX	3	1.232849002	-0.07593127	0.171514824	-3.18382311	-0.27857381	0.062343009
F486	EY	0	0.389295489	11.41885757	0.711222947	-0.0044497	1.407610893	31.70089531
F486	EY	0.75	0.389295489	11.41885757	0.711222947	-0.0044497	0.874190211	23.13669777
F486	EY	1.5	0.389295489	11.41885757	0.711222947	-0.0044497	0.340769529	14.57249737
F486	EY	2.25	0.389295489	11.41885757	0.711222947	-0.0044497	-0.19265115	6.008299828
F486	EY	3	0.389295489	11.41885757	0.711222947	-0.0044497	-0.72607183	-2.55589938
F486	COMB1	0	7.526321411	-144.111984	-0.09062771	-0.06467002	-0.17413878	-183.732742
F486	COMB1	0.75	7.526321411	-133.809174	-0.09062771	-0.06467002	-0.10616755	-78.669281
F486	COMB1	1.5	7.526321411	-110.02877	-0.09062771	-0.06467002	-0.03819633	13.61289215
F486	COMB1	2.25	7.526321411	-86.2483673	-0.09062771	-0.06467002	0.029774897	86.37493896
F486	COMB1	3	7.526321411	-75.945549	-0.09062771	-0.06467002	0.097746126	146.3556976
F486	COMB2	0	6.432879925	-94.6107407	0.344765365	-3.43193007	0.575145245	-114.813797
F486	COMB2	0.75	6.432879925	-87.1215668	0.344765365	-3.43193007	0.316569537	-46.1174049
F486	COMB2	1.5	6.432879925	-70.8910904	0.344765365	-3.43193007	0.057993829	13.68405628
F486	COMB2	2.25	6.432879925	-54.660614	0.344765365	-3.43193007	-0.20058188	60.21991348
F486	COMB2	3	6.432879925	-47.1714401	0.344765365	-3.43193007	-0.45915759	97.86084747
F486	COMB3	0	5.831360817	-86.163208	0.744023561	-1.14284801	1.439838052	-91.394516
F486	COMB3	0.75	5.831360817	-78.6740341	0.744023561	-1.14284801	0.881816685	-29.0338116
F486	COMB3	1.5	5.831360817	-62.4435616	0.744023561	-1.14284801	0.323795378	24.43196106
F486	COMB3	2.25	5.831360817	-46.2130814	0.744023561	-1.14284801	-0.23422593	64.63212585
F486	COMB3	3	5.831360817	-38.7239075	0.744023561	-1.14284801	-0.79224724	95.9373703
F487	D	0	2.955499649	-88.1427994	-0.05044247	1.624038219	-0.11011304	-111.986221
F487	D	0.75	2.955499649	-81.4321365	-0.05044247	1.624038219	-0.07228094	-47.9276276
F487	D	1.5	2.955499649	-67.2401657	-0.05044247	1.624038219	-0.03444885	8.292428017
F487	D	2.25	2.955499649	-53.0482025	-0.05044247	1.624038219	0.00338325	52.93327713
F487	D	3	2.955499649	-46.3375397	-0.05044247	1.624038219	0.041215349	89.73558807
F487	L	0	1.205507159	-36.8117676	-0.03931296	0.519106269	-0.06668364	-45.217392
F487	L	0.75	1.205507159	-34.1398735	-0.03931296	0.519106269	-0.03719872	-18.2763672
F487	L	1.5	1.205507159	-26.124197	-0.03931296	0.519106269	-0.00771381	4.656794071
F487	L	2.25	1.205507159	-18.1085186	-0.03931296	0.519106269	0.021771105	20.91018295
F487	L	3	1.205507159	-15.4366274	-0.03931296	0.519106269	0.051256016	33.1557045
F487	EX	0	0.062954545	0.168329775	0.565746248	-3.33299398	0.934510946	0.088153869
F487	EX	0.75	0.062954545	0.168329775	0.565746248	-3.33299398	0.510198534	-0.03809428
F487	EX	1.5	0.062954545	0.168329775	0.565746248	-3.33299398	0.085886016	-0.16434242
F487	EX	2.25	0.062954545	0.168329775	0.565746248	-3.33299398	-0.33842647	-0.29059058
F487	EX	3	0.062954545	0.168329775	0.565746248	-3.33299398	-0.76273894	-0.41683871
F487	EY	0	-5.6039753	12.33857727	1.016867161	-0.00628542	1.965493917	34.21885681
F487	EY	0.75	-5.6039753	12.33857727	1.016867161	-0.00628542	1.202838659	24.96486282
F487	EY	1.5	-5.6039753	12.33857727	1.016867161	-0.00628542	0.440183371	15.71086979
F487	EY	2.25	-5.6039753	12.33857727	1.016867161	-0.00628542	-0.32247192	6.456876755
F487	EY	3	-5.6039753	12.33857727	1.016867161	-0.00628542	-1.08512723	-2.79711628
F487	COMB1	0	5.475410938	-164.670197	-0.1234317	2.779415846	-0.23882946	-206.731293
F487	COMB1	0.75	5.475410938	-152.342361	-0.1234317	2.779415846	-0.14625509	-86.7553406
F487	COMB1	1.5	5.475410938	-122.486916	-0.1234317	2.779415846	-0.05368071	17.4017849
F487	COMB1	2.25	5.475410938	-92.6314774	-0.1234317	2.779415846	0.038893666	96.97622681
F487	COMB1	3	5.475410938	-80.3036499	-0.1234317	2.779415846	0.131468043	160.731842
F487	COMB2	0	1.782915115	-100.084778	0.840512335	-1.58287001	1.449725389	-120.958832
F487	COMB2	0.75	1.782915115	-92.1969299	0.840512335	-1.58287001	0.81933701	-48.2565613
F487	COMB2	1.5	1.782915115	-74.7704239	0.840512335	-1.58287001	0.188948646	14.95276928
F487	COMB2	2.25	1.782915115	-57.3439255	0.840512335	-1.58287001	-0.44143972	63.89980316
F487	COMB2	3	1.782915115	-49.4560814	0.840512335	-1.58287001	-1.07182813	103.3538971
F487	COMB3	0	-2.38133407	-91.1371155	1.180572391	0.812265813	2.221515656	-95.8714447
F487	COMB3	0.75	-2.38133407	-83.2492752	1.180572391	0.812265813	1.336080551	-29.8799591
F487	COMB3	1.5	-2.38133407	-65.8227692	1.180572391	0.812265813	0.450645506	26.61858559
F487	COMB3	2.25	-2.38133407	-48.3962669	1.180572391	0.812265813	-0.43478954	68.85483551
F487	COMB3	3	-2.38133407	-40.5084229	1.180572391	0.812265813	-1.32022452	101.5981369
F488	D	0	3.184210539	-93.9095612	0.027903724	-12.2959366	0.020362461	-105.065559
F488	D	0.75	3.184210539	-79.6988449	0.027903724	-12.2959366	-0.00056547	-39.4944038
F488	D	1.5	3.184210539	-58.0068321	0.027903724	-12.2959366	-0.0214934	12.61314201
F488	D	2.25	3.184210539	-36.3148193	0.027903724	-12.2959366	-0.04242133	47.51640701
F488	D	3	3.184210539	-22.1041031	0.027903724	-12.2959366	-0.06334925	68.95606232
F488	L	0	0.920105219	-28.7627544	-0.04246017	-4.37865353	-0.06783566	-33.249733

F488	L	0.75	0.920105219	-26.0908623	-0.04246017	-4.37865353	-0.03599033	-12.3455057
F488	L	1.5	0.920105219	-18.0751858	-0.04246017	-4.37865353	-0.004145	4.550858498
F488	L	2.25	0.920105219	-10.0595083	-0.04246017	-4.37865353	0.027700327	14.76744938
F488	L	3	0.920105219	-7.38761663	-0.04246017	-4.37865353	0.059545659	20.9761734
F488	EX	0	0.117611811	-1.16943228	0.574338257	-2.55003715	0.948545575	-1.99432111
F488	EX	0.75	0.117611811	-1.16943228	0.574338257	-2.55003715	0.517789125	-1.11724138
F488	EX	1.5	0.117611811	-1.16943228	0.574338257	-2.55003715	0.087032579	-0.24016152
F488	EX	2.25	0.117611811	-1.16943228	0.574338257	-2.55003715	-0.34372395	0.636918306
F488	EX	3	0.117611811	-1.16943228	0.574338257	-2.55003715	-0.77448046	1.513998032
F488	EY	0	-5.55108118	12.78038979	0.332578659	-0.00296691	0.622626901	35.43857193
F488	EY	0.75	-5.55108118	12.78038979	0.332578659	-0.00296691	0.373191327	25.85322189
F488	EY	1.5	-5.55108118	12.78038979	0.332578659	-0.00296691	0.123755708	16.26786613
F488	EY	2.25	-5.55108118	12.78038979	0.332578659	-0.00296691	-0.1256799	6.682512283
F488	EY	3	-5.55108118	12.78038979	0.332578659	-0.00296691	-0.37511548	-2.90284157
F488	COMB1	0	5.293220997	-158.711884	-0.0344518	-21.7609692	-0.08410209	-179.278244
F488	COMB1	0.75	5.293220997	-137.383987	-0.0344518	-21.7609692	-0.05826309	-67.1460953
F488	COMB1	1.5	5.293220997	-98.5284958	-0.0344518	-21.7609692	-0.03242408	22.41714478
F488	COMB1	2.25	5.293220997	-59.6729965	-0.0344518	-21.7609692	-0.00658507	80.6476059
F488	COMB1	3	5.293220997	-38.3451118	-0.0344518	-21.7609692	0.019253951	116.3091507
F488	COMB2	0	2.006392002	-104.849846	0.715126336	-16.930233	1.177884579	-111.693481
F488	COMB2	0.75	2.006392002	-89.0869446	0.715126336	-16.930233	0.641536295	-38.3705406
F488	COMB2	1.5	2.006392002	-63.7854004	0.715126336	-16.930233	0.105188027	19.5531311
F488	COMB2	2.25	2.006392002	-38.4838448	0.715126336	-16.930233	-0.43116024	57.30817413
F488	COMB2	3	2.006392002	-22.7209473	0.715126336	-16.930233	-0.96750849	79.66394806
F488	COMB3	0	-2.15833306	-94.6142731	0.546048105	-15.096386	0.952562511	-84.2102127
F488	COMB3	0.75	-2.15833306	-78.8513718	0.546048105	-15.096386	0.543023765	-18.5640068
F488	COMB3	1.5	-2.15833306	-53.5498199	0.546048105	-15.096386	0.133485019	31.68292809
F488	COMB3	2.25	-2.15833306	-28.2482681	0.546048105	-15.096386	-0.27605373	61.76124191
F488	COMB3	3	-2.15833306	-12.4853697	0.546048105	-15.096386	-0.68559241	76.44028473
F489	D	0	-0.13292348	-35.8751831	-0.02528218	-0.02162481	-0.0652511	-25.2676563
F489	D	1.25	-0.13292348	-23.23456	-0.02528218	-0.02162481	-0.03364838	13.84064579
F489	D	2.5	-0.13292348	3.537310123	-0.02528218	-0.02162481	-0.00204564	26.3765564
F489	D	3.75	-0.13292348	30.30917931	-0.02528218	-0.02162481	0.029557085	4.99737072
F489	D	5	-0.13292348	42.9498024	-0.02528218	-0.02162481	0.061159819	-42.9542046
F489	L	0	0.063768379	-12.1079149	-0.00266859	0.007479508	-0.00701735	-9.08985233
F489	L	1.25	0.063768379	-8.20166397	-0.00266859	0.007479508	-0.00368161	4.417437077
F489	L	2.5	0.063768379	1.01708591	-0.00266859	0.007479508	-0.00034586	8.992434502
F489	L	3.75	0.063768379	10.23583698	-0.00266859	0.007479508	0.002989878	1.874722123
F489	L	5	0.063768379	14.14208603	-0.00266859	0.007479508	0.006325619	-14.1752825
F489	EX	0	-1.64812422	1.836528778	-0.00842007	-0.00212332	-0.01034939	5.362305641
F489	EX	1.25	-1.64812422	1.836528778	-0.00842007	-0.00212332	0.000175695	3.066644669
F489	EX	2.5	-1.64812422	1.836528778	-0.00842007	-0.00212332	0.010700778	0.770983696
F489	EX	3.75	-1.64812422	1.836528778	-0.00842007	-0.00212332	0.021225862	-1.52467728
F489	EX	5	-1.64812422	1.836528778	-0.00842007	-0.00212332	0.031750944	-3.82033825
F489	EY	0	0.054751553	-0.00164686	0.294690669	-0.00841396	0.740253985	-0.00510587
F489	EY	1.25	0.054751553	-0.00164686	0.294690669	-0.00841396	0.371890604	-0.0030473
F489	EY	2.5	0.054751553	-0.00164686	0.294690669	-0.00841396	0.003527266	-0.00098873
F489	EY	3.75	0.054751553	-0.00164686	0.294690669	-0.00841396	-0.3648361	0.001069841
F489	EY	5	0.054751553	-0.00164686	0.294690669	-0.00841396	-0.73319942	0.003128412
F489	COMB1	0	-0.05747877	-62.4228859	-0.03460837	-0.01398255	-0.08952908	-44.8649521
F489	COMB1	1.25	-0.05747877	-41.0041351	-0.03460837	-0.01398255	-0.04626862	23.6766758
F489	COMB1	2.5	-0.05747877	5.872109413	-0.03460837	-0.01398255	-0.00300816	46.0397644
F489	COMB1	3.75	-0.05747877	52.74835587	-0.03460837	-0.01398255	0.040252306	8.996399879
F489	COMB1	5	-0.05747877	74.167099	-0.03460837	-0.01398255	0.083512768	-74.225502
F489	COMB2	0	-1.80804443	-39.5826492	0.056725897	-0.02519803	0.151744261	-23.8459644
F489	COMB2	1.25	-1.80804443	-25.0795231	0.056725897	-0.02519803	0.080836885	19.09718895
F489	COMB2	2.5	-1.80804443	5.934846401	0.056725897	-0.02519803	0.00992952	31.3256588
F489	COMB2	3.75	-1.80804443	36.94921494	0.056725897	-0.02519803	-0.06097785	4.260072708
F489	COMB2	5	-1.80804443	51.45233536	0.056725897	-0.02519803	-0.13188522	-53.520195
F489	COMB3	0	-0.58115262	-40.9061584	0.279385984	-0.02985351	0.703282475	-27.7105789
F489	COMB3	1.25	-0.58115262	-26.4030342	0.279385984	-0.02985351	0.354049981	16.8869648
F489	COMB3	2.5	-0.58115262	4.611335278	0.279385984	-0.02985351	0.0048175	30.76982307
F489	COMB3	3.75	-0.58115262	35.62570572	0.279385984	-0.02985351	-0.34441498	5.358626842
F489	COMB3	5	-0.58115262	50.12882614	0.279385984	-0.02985351	-0.6936475	-50.7672539
F490	D	0	-0.22731084	-39.6437035	-0.05244889	-0.00799209	-0.13097423	-39.987709
F490	D	1.25	-0.22731084	-27.0030823	-0.05244889	-0.00799209	-0.06541312	3.831246138
F490	D	2.5	-0.22731084	-0.23121215	-0.05244889	-0.00799209	0.000147997	21.07781029
F490	D	3.75	-0.22731084	26.54065704	-0.05244889	-0.00799209	0.065709107	4.409276009
F490	D	5	-0.22731084	39.18127823	-0.05244889	-0.00799209	0.131270215	-38.8316498
F490	L	0	0.096844688	-13.1775551	-0.00908349	0.001654516	-0.02277086	-13.4505682
F490	L	1.25	0.096844688	-9.27130508	-0.00908349	0.001654516	-0.0114165	1.393772364
F490	L	2.5	0.096844688	-0.0525545	-0.00908349	0.001654516	-6.2142E-05	7.305819988
F490	L	3.75	0.096844688	9.166195869	-0.00908349	0.001654516	0.011292215	1.525158644
F490	L	5	0.096844688	13.07244587	-0.00908349	0.001654516	0.022646572	-13.1877947
F490	EX	0	-2.46944332	1.264140606	-0.03960403	-0.00158345	-0.09833916	3.076811314
F490	EX	1.25	-2.46944332	1.264140606	-0.03960403	-0.00158345	-0.04883413	1.496635437
F490	EX	2.5	-2.46944332	1.264140606	-0.03960403	-0.00158345	0.000670911	-0.08354034
F490	EX	3.75	-2.46944332	1.264140606	-0.03960403	-0.00158345	0.050175946	-1.6637162
F490	EX	5	-2.46944332	1.264140606	-0.03960403	-0.00158345	0.099680983	-3.24389195
F490	EY	0	0.384498805	-0.00534722	0.683267951	-0.01673675	1.703361273	-0.01280344
F490	EY	1.25	0.384498805	-0.00534722	0.683267951	-0.01673675	0.849276304	-0.00611942
F490	EY	2.5	0.384498805	-0.00534722	0.683267951	-0.01673675	-0.00480868	0.000564607
F490	EY	3.75	0.384498805	-0.00534722	0.683267951	-0.01673675	-0.85889363	0.007248633
F490	EY	5	0.384498805	-0.00534722	0.683267951	-0.01673675	-1.7129786	0.013932658

F490	COMB1	0	-0.11782151	-68.6565323	-0.07747225	-0.00694328	-0.19360244	-69.5061569
F490	COMB1	1.25	-0.11782151	-47.2377853	-0.07747225	-0.00694328	-0.09676214	6.827530861
F490	COMB1	2.5	-0.11782151	-0.36154178	-0.07747225	-0.00694328	7.81697E-05	36.98268509
F490	COMB1	3.75	-0.11782151	46.51470184	-0.07747225	-0.00694328	0.096918471	7.731385231
F490	COMB1	5	-0.11782151	67.93344879	-0.07747225	-0.00694328	0.193758786	-67.6984482
F490	COMB2	0	-2.64292693	-44.4701157	0.116306603	-0.01478146	0.290082008	-43.0435562
F490	COMB2	1.25	-2.64292693	-29.9669952	0.116306603	-0.01478146	0.144698739	6.008936882
F490	COMB2	2.5	-2.64292693	1.047373772	0.116306603	-0.01478146	-0.00068452	24.34674644
F490	COMB2	3.75	-2.64292693	32.06174469	0.116306603	-0.01478146	-0.14606778	3.390501976
F490	COMB2	5	-2.64292693	46.56486511	0.116306603	-0.01478146	-0.29145104	-48.280426
F490	COMB3	0	-0.58232123	-45.3842278	0.647023439	-0.02594289	1.612856746	-45.2682724
F490	COMB3	1.25	-0.58232123	-30.8811073	0.647023439	-0.02594289	0.804077387	4.926861286
F490	COMB3	2.5	-0.58232123	0.133262292	0.647023439	-0.02594289	-0.00470196	24.40731049
F490	COMB3	3.75	-0.58232123	31.14763069	0.647023439	-0.02594289	-0.81348127	4.593705177
F490	COMB3	5	-0.58232123	45.65075302	0.647023439	-0.02594289	-1.62226057	-45.9345856
F491	D	0	-0.27371174	-39.4093056	0.002209364	-0.00011102	0.006120562	-38.9352036
F491	D	1.25	-0.27371174	-26.7686844	0.002209364	-0.00011102	0.003358856	4.590753078
F491	D	2.5	-0.27371174	0.003186769	0.002209364	-0.00011102	0.00059715	21.54431915
F491	D	3.75	-0.27371174	26.77505684	0.002209364	-0.00011102	-0.00216456	4.582786083
F491	D	5	-0.27371174	39.41567993	0.002209364	-0.00011102	-0.00492626	-38.9511375
F491	L	0	0.103695296	-13.0728636	0.001804	0.000523475	0.004621798	-13.1511574
F491	L	1.25	0.103695296	-9.16661453	0.001804	0.000523475	0.002366798	1.562318444
F491	L	2.5	0.103695296	0.052136518	0.001804	0.000523475	0.000111799	7.343502522
F491	L	3.75	0.103695296	9.270886421	0.001804	0.000523475	-0.0021432	1.431977153
F491	L	5	0.103695296	13.17713737	0.001804	0.000523475	-0.0043982	-13.4118404
F491	EX	0	-2.37651014	1.321361065	0.183264151	-0.00152841	0.459212095	3.305663347
F491	EX	1.25	-2.37651014	1.321361065	0.183264151	-0.00152841	0.230131894	1.653962135
F491	EX	2.5	-2.37651014	1.321361065	0.183264151	-0.00152841	0.001051712	0.002260778
F491	EX	3.75	-2.37651014	1.321361065	0.183264151	-0.00152841	-0.22802848	-1.64944053
F491	EX	5	-2.37651014	1.321361065	0.183264151	-0.00152841	-0.45710865	-3.30114174
F491	EY	0	0.672743261	-2.339E-07	-8.1519E-06	-3.8569E-07	-0.00367952	0.002643541
F491	EY	1.25	0.672743261	-2.339E-07	-8.1519E-06	-3.8569E-07	-0.00366933	0.002643833
F491	EY	2.5	0.672743261	-2.339E-07	-8.1519E-06	-3.8569E-07	-0.00365914	0.002644125
F491	EY	3.75	0.672743261	-2.339E-07	-8.1519E-06	-3.8569E-07	-0.00364895	0.002644418
F491	EY	5	0.672743261	-2.339E-07	-8.1519E-06	-3.8569E-07	-0.00363876	0.00264471
F491	COMB1	0	-0.16254163	-68.2077484	0.005537637	0.000704335	0.01473955	-67.7640991
F491	COMB1	1.25	-0.16254163	-46.7890015	0.005537637	0.000704335	0.007817504	8.008613586
F491	COMB1	2.5	-0.16254163	0.087242551	0.005537637	0.000704335	0.000895458	37.60278702
F491	COMB1	3.75	-0.16254163	46.96348572	0.005537637	0.000704335	-0.00602659	7.790506363
F491	COMB1	5	-0.16254163	68.38223267	0.005537637	0.000704335	-0.01294863	-68.2003098
F491	COMB2	0	-2.50250721	-44.1301155	0.192563921	-0.0015337	0.482007921	-41.6023827
F491	COMB2	1.25	-2.50250721	-29.6269932	0.192563921	-0.0015337	0.241303012	7.025104523
F491	COMB2	2.5	-2.50250721	1.387377739	0.192563921	-0.0015337	0.000598115	24.93791008
F491	COMB2	3.75	-2.50250721	32.40174866	0.192563921	-0.0015337	-0.24010678	3.556659937
F491	COMB2	5	-2.50250721	46.90486908	0.192563921	-0.0015337	-0.48081166	-48.5392723
F491	COMB3	0	-0.29695356	-45.0814972	0.060607739	-0.00043353	0.148670763	-43.9805183
F491	COMB3	1.25	-0.29695356	-30.578373	0.060607739	-0.00043353	0.072911091	5.836194992
F491	COMB3	2.5	-0.29695356	0.435997605	0.060607739	-0.00043353	-0.00284859	24.9382267
F491	COMB3	3.75	-0.29695356	31.45036888	0.060607739	-0.00043353	-0.07860826	4.746201038
F491	COMB3	5	-0.29695356	45.9534874	0.060607739	-0.00043353	-0.15436794	-46.1605072
F492	D	0	-0.23103544	-39.0976181	0.056231316	0.008670264	0.140746608	-38.7051926
F492	D	1.25	-0.23103544	-26.456995	0.056231316	0.008670264	0.070457451	4.431153774
F492	D	2.5	-0.23103544	0.314874768	0.056231316	0.008670264	0.000168307	20.99510956
F492	D	3.75	-0.23103544	27.08674431	0.056231316	0.008670264	-0.07012084	3.643967152
F492	D	5	-0.23103544	39.7273674	0.056231316	0.008670264	-0.14040999	-40.2795677
F492	L	0	0.0963552	-13.2225256	0.012704744	0.005443622	0.031684011	-13.6000776
F492	L	1.25	0.0963552	-9.3162756	0.012704744	0.005443622	0.01580308	1.300476193
F492	L	2.5	0.0963552	-0.09752538	0.012704744	0.005443622	-7.785E-05	7.268737316
F492	L	3.75	0.0963552	9.121225357	0.012704744	0.005443622	-0.01595878	1.544289708
F492	L	5	0.0963552	13.0274744	0.012704744	0.005443622	-0.03183971	-13.1124506
F492	EX	0	-1.76128364	1.256911159	-0.04391053	-0.00153782	-0.10999345	3.226953506
F492	EX	1.25	-1.76128364	1.256911159	-0.04391053	-0.00153782	-0.05510529	1.65581429
F492	EX	2.5	-1.76128364	1.256911159	-0.04391053	-0.00153782	-0.00021712	0.084675267
F492	EX	3.75	-1.76128364	1.256911159	-0.04391053	-0.00153782	0.054671034	-1.48646379
F492	EX	5	-1.76128364	1.256911159	-0.04391053	-0.00153782	0.109559193	-3.05760288
F492	EY	0	0.384492695	0.005347312	-0.68326503	0.016737105	-1.71297145	0.013932984
F492	EY	1.25	0.384492695	0.005347312	-0.68326503	0.016737105	-0.85889006	0.007248844
F492	EY	2.5	0.384492695	0.005347312	-0.68326503	0.016737105	-0.00480876	0.000564703
F492	EY	3.75	0.384492695	0.005347312	-0.68326503	0.016737105	0.849272549	-0.00611944
F492	EY	5	0.384492695	0.005347312	-0.68326503	0.016737105	1.703353882	-0.01280358
F492	COMB1	0	-0.1230742	-68.0731812	0.087805167	0.019114112	0.219590336	-68.2063522
F492	COMB1	1.25	-0.1230742	-46.6544342	0.087805167	0.019114112	0.109833874	7.398146629
F492	COMB1	2.5	-0.1230742	0.221809104	0.087805167	0.019114112	7.74084E-05	36.82411194
F492	COMB1	3.75	-0.1230742	47.09805298	0.087805167	0.019114112	-0.10967906	6.843624115
F492	COMB1	5	-0.1230742	68.51679993	0.087805167	0.019114112	-0.21943553	-69.3153992
F492	COMB2	0	-1.91404867	-43.9150085	-0.197631	0.014499059	-0.49566483	-41.5801926
F492	COMB2	1.25	-1.91404867	-29.4118843	-0.197631	0.014499059	-0.24862605	6.778412819
F492	COMB2	2.5	-1.91404867	1.602485418	-0.197631	0.014499059	-0.00158729	24.42233276
F492	COMB2	3.75	-1.91404867	32.61685562	-0.197631	0.014499059	0.24545148	2.772199154
F492	COMB2	5	-1.91404867	47.11997604	-0.197631	0.014499059	0.492490232	-49.5926208
F492	COMB3	0	-0.36332235	-44.8160553	-0.66821522	0.027908064	-1.67550361	-43.8933563
F492	COMB3	1.25	-0.36332235	-30.3129311	-0.66821522	0.027908064	-0.84023446	5.591554165
F492	COMB3	2.5	-0.36332235	0.701439679	-0.66821522	0.027908064	-0.0049654	24.36178207
F492	COMB3	3.75	-0.36332235	31.71580887	-0.66821522	0.027908064	0.830303669	3.837955236

F492	COMB3	5	-0.36332235	46.21892929	-0.66821522	0.027908064	1.665572643	-47.4005547
F493	D	0	-0.13627256	-43.1761055	0.028023498	0.032176126	0.068059616	-43.5608406
F493	D	1.25	-0.13627256	-30.5354843	0.028023498	0.032176126	0.033030245	4.673617363
F493	D	2.5	-0.13627256	-3.76361513	0.028023498	0.032176126	-0.00199913	26.33568573
F493	D	3.75	-0.13627256	23.008255	0.028023498	0.032176126	-0.03702851	14.08265495
F493	D	5	-0.13627256	35.64887619	0.028023498	0.032176126	-0.07205788	-24.7427654
F493	L	0	0.063988857	-14.1679449	0.006494293	-0.0029903	0.015861861	-14.1992817
F493	L	1.25	0.063988857	-10.2616949	0.006494293	-0.0029903	0.007743995	1.883045673
F493	L	2.5	0.063988857	-1.04294479	0.006494293	-0.0029903	-0.00037387	9.033081055
F493	L	3.75	0.063988857	8.175805092	0.006494293	-0.0029903	-0.00849174	4.490407944
F493	L	5	0.063988857	12.08205509	0.006494293	-0.0029903	-0.01660961	-8.98455715
F493	EX	0	-0.90942568	1.808493376	-0.03159527	-0.00192005	-0.07629287	3.770481586
F493	EX	1.25	-0.90942568	1.808493376	-0.03159527	-0.00192005	-0.03679878	1.509864569
F493	EX	2.5	-0.90942568	1.808493376	-0.03159527	-0.00192005	0.002695318	-0.75075227
F493	EX	3.75	-0.90942568	1.808493376	-0.03159527	-0.00192005	0.042189412	-3.01136923
F493	EX	5	-0.90942568	1.808493376	-0.03159527	-0.00192005	0.081683502	-5.27198601
F493	EY	0	0.054750104	0.001646733	-0.29468733	0.008414084	-0.73319101	0.003128123
F493	EY	1.25	0.054750104	0.001646733	-0.29468733	0.008414084	-0.36483184	0.001069706
F493	EY	2.5	0.054750104	0.001646733	-0.29468733	0.008414084	0.003527362	-0.00098871
F493	EY	3.75	0.054750104	0.001646733	-0.29468733	0.008414084	0.371886522	-0.00304713
F493	EY	5	0.054750104	0.001646733	-0.29468733	0.008414084	0.740245759	-0.00510554
F493	COMB1	0	-0.06114491	-74.4800415	0.044019066	0.033826876	0.107050516	-74.9918594
F493	COMB1	1.25	-0.06114491	-53.0612907	0.044019066	0.033826876	0.052026685	8.621213913
F493	COMB1	2.5	-0.06114491	-6.18505001	0.044019066	0.033826876	-0.00299715	46.0557518
F493	COMB1	3.75	-0.06114491	40.69119263	0.044019066	0.033826876	-0.05802099	24.08383942
F493	COMB1	5	-0.06114491	62.10994339	0.044019066	0.033826876	-0.11304483	-44.0666122
F493	COMB2	0	-1.04693902	-47.9255066	-0.09405724	0.033506174	-0.23345922	-46.3082237
F493	COMB2	1.25	-1.04693902	-33.4223824	-0.09405724	0.033506174	-0.11588764	7.063504219
F493	COMB2	2.5	-1.04693902	-2.40801406	-0.09405724	0.033506174	0.001683915	29.72055054
F493	COMB2	3.75	-1.04693902	28.60635567	-0.09405724	0.033506174	0.119255468	13.08353996
F493	COMB2	5	-1.04693902	43.109478	-0.09405724	0.033506174	0.236827031	-34.2681541
F493	COMB3	0	-0.35191119	-49.2264099	-0.28790385	0.041072961	-0.71742374	-49.0206718
F493	COMB3	1.25	-0.35191119	-34.7232857	-0.28790385	0.041072961	-0.35754392	5.97718811
F493	COMB3	2.5	-0.35191119	-3.70891905	-0.28790385	0.041072961	0.002335897	30.26036644
F493	COMB3	3.75	-0.35191119	27.30545044	-0.28790385	0.041072961	0.362215698	15.24948597
F493	COMB3	5	-0.35191119	41.80857468	-0.28790385	0.041072961	0.722095549	-30.4760761
F494	D	0	2.729902029	14.29796505	0.104206569	-12.7525206	0.130302489	61.35891342
F494	D	0.75	2.729902029	26.63825226	0.104206569	-12.7525206	0.052147713	46.24164963
F494	D	1.5	2.729902029	42.71915817	0.104206569	-12.7525206	-0.02600706	20.46645737
F494	D	2.25	2.729902029	58.80006027	0.104206569	-12.7525206	-0.10416183	-17.8369617
F494	D	3	2.729902029	71.14035034	0.104206569	-12.7525206	-0.1823166	-66.7983093
F494	L	0	0.439814836	5.39382267	-0.02581677	-4.6799016	-0.04655408	12.76177788
F494	L	0.75	0.439814836	6.096946716	-0.02581677	-4.6799016	-0.02719155	8.54063797
F494	L	1.5	0.439814836	8.206317902	-0.02581677	-4.6799016	-0.00782901	3.264815092
F494	L	2.25	0.439814836	10.31568813	-0.02581677	-4.6799016	0.011533532	-3.76881361
F494	L	3	0.439814836	11.01881218	-0.02581677	-4.6799016	0.030896069	-11.8571253
F494	EX	0	0.187409997	-0.64522576	0.712330282	2.772173405	1.413810492	-1.53681779
F494	EX	0.75	0.187409997	-0.64522576	0.712330282	2.772173405	0.879563868	-1.05289936
F494	EX	1.5	0.187409997	-0.64522576	0.712330282	2.772173405	0.345317215	-0.56898105
F494	EX	2.25	0.187409997	-0.64522576	0.712330282	2.772173405	-0.18892944	-0.0850627
F494	EX	3	0.187409997	-0.64522576	0.712330282	2.772173405	-0.72317606	0.398855627
F494	EY	0	-5.25639343	12.78203106	-0.38733366	-0.00213908	-0.36513513	-2.89442611
F494	EY	0.75	-5.25639343	12.78203106	-0.38733366	-0.00213908	-0.07463549	-12.4809303
F494	EY	1.5	-5.25639343	12.78203106	-0.38733366	-0.00213908	0.215864167	-22.0674343
F494	EY	2.25	-5.25639343	12.78203106	-0.38733366	-0.00213908	0.506363809	-31.6539402
F494	EY	3	-5.25639343	12.78203106	-0.38733366	-0.00213908	0.796863496	-41.2404404
F494	COMB1	0	3.979586363	25.78767395	0.083741046	-22.7908669	0.081876449	94.04953766
F494	COMB1	0.75	3.979586363	41.72101593	0.083741046	-22.7908669	0.019070784	69.15499878
F494	COMB1	1.5	3.979586363	64.39309692	0.083741046	-22.7908669	-0.04373488	29.78345299
F494	COMB1	2.25	3.979586363	87.06517792	0.083741046	-22.7908669	-0.10654055	-27.4344559
F494	COMB1	3	3.979586363	102.9985199	0.083741046	-22.7908669	-0.16934621	-99.1293716
F494	COMB2	0	1.543144345	20.07044792	0.716536343	-11.9957905	1.470429301	65.94446564
F494	COMB2	0.75	1.543144345	33.24923325	0.716536343	-11.9957905	0.933028221	46.22278976
F494	COMB2	1.5	1.543144345	50.79863739	0.716536343	-11.9957905	0.395626992	14.97806072
F494	COMB2	2.25	1.543144345	68.34803772	0.716536343	-11.9957905	-0.14177422	-29.9750175
F494	COMB2	3	1.543144345	81.52682495	0.716536343	-11.9957905	-0.67917544	-86.4511414
F494	COMB3	0	-2.45524001	29.92980385	-0.08103168	-13.9933271	0.184111476	64.92356873
F494	COMB3	0.75	-2.45524001	43.10858917	-0.08103168	-13.9933271	0.244885132	37.80739212
F494	COMB3	1.5	-2.45524001	60.65799332	-0.08103168	-13.9933271	0.305658758	-0.83183706
F494	COMB3	2.25	-2.45524001	78.20738983	-0.08103168	-13.9933271	0.366432369	-53.1794167
F494	COMB3	3	-2.45524001	91.38618469	-0.08103168	-13.9933271	0.42720601	-117.050041
F495	D	0	2.889460564	36.43154144	0.137534395	1.465554476	0.159972772	89.4479599
F495	D	0.75	2.889460564	43.14215851	0.137534395	1.465554476	0.056822184	60.07546234
F495	D	1.5	2.889460564	57.33400345	0.137534395	1.465554476	-0.04632841	22.86455154
F495	D	2.25	2.889460564	71.52584839	0.137534395	1.465554476	-0.14947899	-25.9253712
F495	D	3	2.889460564	78.23646545	0.137534395	1.465554476	-0.25262958	-82.5536957
F495	L	0	0.902577221	12.25913525	-0.00214351	0.350607872	-0.01223813	27.97361755
F495	L	0.75	0.902577221	13.66538239	-0.00214351	0.350607872	-0.0106305	18.42772293
F495	L	1.5	0.902577221	17.88412476	-0.00214351	0.350607872	-0.00902287	6.772462845
F495	L	2.25	0.902577221	22.10286522	-0.00214351	0.350607872	-0.00741524	-8.39840889
F495	L	3	0.902577221	23.50911331	-0.00214351	0.350607872	-0.00580761	-25.678648
F495	EX	0	-0.30340779	0.391617298	0.481311858	3.532000303	0.719950318	0.433927327
F495	EX	0.75	-0.30340779	0.391617298	0.481311858	3.532000303	0.358967155	0.14021495
F495	EX	1.5	-0.30340779	0.391617298	0.481311858	3.532000303	-0.00201604	-0.15349743

F495	EX	2.25	-0.30340779	0.391617298	0.481311858	3.532000303	-0.36299923	-0.44720984
F495	EX	3	-0.30340779	0.391617298	0.481311858	3.532000303	-0.72398239	-0.74092221
F495	EY	0	-5.21540308	12.34227848	-1.34662104	-0.00964656	-1.35142803	-2.78879404
F495	EY	0.75	-5.21540308	12.34227848	-1.34662104	-0.00964656	-0.34146425	-12.0454855
F495	EY	1.5	-5.21540308	12.34227848	-1.34662104	-0.00964656	0.668499529	-21.3021755
F495	EY	2.25	-5.21540308	12.34227848	-1.34662104	-0.00964656	1.67846334	-30.5588684
F495	EY	3	-5.21540308	12.34227848	-1.34662104	-0.00964656	2.688426971	-39.8155556
F495	COMB1	0	4.911476135	63.33246994	0.161611646	2.319638014	0.172386318	152.0953369
F495	COMB1	0.75	4.911476135	73.6352005	0.161611646	2.319638014	0.051177822	101.574913
F495	COMB1	1.5	4.911476135	97.41540527	0.161611646	2.319638014	-0.07003068	38.27340317
F495	COMB1	2.25	4.911476135	121.1956024	0.161611646	2.319638014	-0.19123918	-44.5479012
F495	COMB1	3	4.911476135	131.4983368	0.161611646	2.319638014	-0.31244767	-140.150269
F495	COMB2	0	1.36136651	46.40789032	0.217708036	5.301855087	0.483565122	102.3026962
F495	COMB2	0.75	1.36136651	53.89700317	0.217708036	5.301855087	0.320284426	65.2347641
F495	COMB2	1.5	1.36136651	70.12734222	0.217708036	5.301855087	0.157003716	19.27204895
F495	COMB2	2.25	1.36136651	86.35768127	0.217708036	5.301855087	-0.006277	-39.9560432
F495	COMB2	3	1.36136651	93.84680176	0.217708036	5.301855087	-0.16955771	-108.078911
F495	COMB3	0	-2.25350118	55.19749832	-1.11860299	2.75172472	-1.0280987	99.94049835
F495	COMB3	0.75	-2.25350118	62.68661118	-1.11860299	2.75172472	-0.18914813	56.28037643
F495	COMB3	1.5	-2.25350118	78.91695404	-1.11860299	2.75172472	0.649802446	3.725468159
F495	COMB3	2.25	-2.25350118	95.14729309	-1.11860299	2.75172472	1.488752961	-62.0948219
F495	COMB3	3	-2.25350118	102.6364059	-1.11860299	2.75172472	2.327703476	-136.809875
F496	D	0	4.416564465	34.63229752	0.082995944	-0.03033036	0.092183739	85.81448364
F496	D	0.75	4.416564465	41.34291077	0.082995944	-0.03033036	0.02993691	57.79140854
F496	D	1.5	4.416564465	55.53475189	0.082995944	-0.03033036	-0.03230992	21.92993355
F496	D	2.25	4.416564465	69.72660065	0.082995944	-0.03033036	-0.09455675	-25.5105572
F496	D	3	4.416564465	76.43721008	0.082995944	-0.03033036	-0.15680358	-80.7894516
F496	L	0	1.401490927	11.75597954	0.005431053	0.015601206	0.003029788	26.93462372
F496	L	0.75	1.401490927	13.16222763	0.005431053	0.015601206	-0.00104349	17.76609421
F496	L	1.5	1.401490927	17.38097	0.005431053	0.015601206	-0.00511677	6.488198757
F496	L	2.25	1.401490927	21.59971046	0.005431053	0.015601206	-0.00919006	-8.30530739
F496	L	3	1.401490927	23.00595856	0.005431053	0.015601206	-0.01326334	-25.2081795
F496	EX	0	-1.11604118	0.010753167	-0.20896704	3.355992317	-0.2122312	-0.05550034
F496	EX	0.75	-1.11604118	0.010753167	-0.20896704	3.355992317	-0.05550622	-0.0635652
F496	EX	1.5	-1.11604118	0.010753167	-0.20896704	3.355992317	0.101218753	-0.07163007
F496	EX	2.25	-1.11604118	0.010753167	-0.20896704	3.355992317	0.25794372	-0.07969493
F496	EX	3	-1.11604118	0.010753167	-0.20896704	3.355992317	0.414668709	-0.08775979
F496	EY	0	-0.29394168	11.4135313	-0.99945349	-0.0068392	-0.98324132	-2.57264042
F496	EY	0.75	-0.29394168	11.4135313	-0.99945349	-0.0068392	-0.23365279	-11.1327705
F496	EY	1.5	-0.29394168	11.4135313	-0.99945349	-0.0068392	0.515935779	-19.6929035
F496	EY	2.25	-0.29394168	11.4135313	-0.99945349	-0.0068392	1.265524387	-28.2530327
F496	EY	3	-0.29394168	11.4135313	-0.99945349	-0.0068392	2.015112877	-36.8131638
F496	COMB1	0	7.542263031	60.36832809	0.108284816	-0.0114345	0.115468152	146.0727692
F496	COMB1	0.75	7.542263031	70.67105865	0.108284816	-0.0114345	0.034254704	97.7754364
F496	COMB1	1.5	7.542263031	94.4512558	0.108284816	-0.0114345	-0.04695874	36.69703674
F496	COMB1	2.25	7.542263031	118.2314529	0.108284816	-0.0114345	-0.12817219	-43.9011574
F496	COMB1	3	7.542263031	128.5341797	0.108284816	-0.0114345	-0.20938563	-137.280426
F496	COMB2	0	3.831168175	43.67343903	-0.44225222	3.444365025	-0.431633	97.7217865
F496	COMB2	0.75	3.831168175	51.16254807	-0.44225222	3.444365025	-0.09994451	62.70468521
F496	COMB2	1.5	3.831168175	67.3928833	-0.44225222	3.444365025	0.231743991	18.79281235
F496	COMB2	2.25	3.831168175	83.62322998	-0.44225222	3.444365025	0.563432455	-38.3844452
F496	COMB2	3	3.831168175	91.11234283	-0.44225222	3.444365025	0.895120978	-104.456474
F496	COMB3	0	4.418670654	52.05464172	-1.02639425	1.023023844	-1.00150895	95.87085724
F496	COMB3	0.75	4.418670654	59.54375458	-1.02639425	1.023023844	-0.23171483	54.56786346
F496	COMB3	1.5	4.418670654	75.774086	-1.02639425	1.023023844	0.538079321	4.370101929
F496	COMB3	2.25	4.418670654	92.00443268	-1.02639425	1.023023844	1.307873368	-59.0930443
F496	COMB3	3	4.418670654	99.49354553	-1.02639425	1.023023844	2.077667475	-131.450958
F497	D	0	4.419623852	34.59561539	-0.09053545	0.095358759	-0.09819492	85.75177765
F497	D	0.75	4.419623852	41.30622864	-0.09053545	0.095358759	-0.03029347	57.75621414
F497	D	1.5	4.419623852	55.49807358	-0.09053545	0.095358759	0.037607972	21.92225075
F497	D	2.25	4.419623852	69.68991852	-0.09053545	0.095358759	0.105509415	-25.4907284
F497	D	3	4.419623852	76.40052795	-0.09053545	0.095358759	0.173410863	-80.7421112
F497	L	0	1.440650344	11.87195206	-0.01340788	-0.11571605	-0.01059934	27.14697456
F497	L	0.75	1.440650344	13.2781992	-0.01340788	-0.11571605	-0.00054345	17.89146805
F497	L	1.5	1.440650344	17.49694061	-0.01340788	-0.11571605	0.009512448	6.526594639
F497	L	2.25	1.440650344	21.71568298	-0.01340788	-0.11571605	0.019568341	-8.35389042
F497	L	3	1.440650344	23.12192917	-0.01340788	-0.11571605	0.029624233	-25.3437405
F497	EX	0	1.005674362	-0.0114815	-0.44371167	3.344272137	-0.62568903	0.062352423
F497	EX	0.75	1.005674362	-0.0114815	-0.44371167	3.344272137	-0.29290596	0.070963532
F497	EX	1.5	1.005674362	-0.0114815	-0.44371167	3.344272137	0.03987712	0.079574637
F497	EX	2.25	1.005674362	-0.0114815	-0.44371167	3.344272137	0.37266019	0.088185742
F497	EX	3	1.005674362	-0.0114815	-0.44371167	3.344272137	0.705443263	0.096796855
F497	EY	0	-0.29396141	11.41351128	0.999473572	0.006838576	0.98326081	-2.57263684
F497	EY	0.75	-0.29396141	11.41351128	0.999473572	0.006838576	0.233657181	-11.1327534
F497	EY	1.5	-0.29396141	11.41351128	0.999473572	0.006838576	-0.51594645	-19.6928673
F497	EY	2.25	-0.29396141	11.41351128	0.999473572	0.006838576	-1.26555026	-28.2529831
F497	EY	3	-0.29396141	11.41351128	0.999473572	0.006838576	-2.01515388	-36.8130989
F497	COMB1	0	7.608589172	60.50986481	-0.13009515	-0.07071517	-0.13479285	146.3372955
F497	COMB1	0.75	7.608589172	70.81259155	-0.13009515	-0.07071517	-0.03722168	97.93380737
F497	COMB1	1.5	7.608589172	94.59279633	-0.13009515	-0.07071517	0.060349479	36.74925232
F497	COMB1	2.25	7.608589172	118.3729935	-0.13009515	-0.07071517	0.157920644	-43.955101
F497	COMB1	3	7.608589172	128.6757202	-0.13009515	-0.07071517	0.255491793	-137.440521
F497	COMB2	0	6.042685032	43.64843369	-0.2436931	3.527152061	-0.44430444	97.84481812
F497	COMB2	0.75	6.042685032	51.13754654	-0.2436931	3.527152061	-0.26153499	62.84646606

F497	COMB2	1.5	6.042685032	67.3678894	-0.2436931	3.527152061	-0.07876553	18.95334625
F497	COMB2	2.25	6.042685032	83.59822083	-0.2436931	3.527152061	0.104003891	-38.2051582
F497	COMB2	3	6.042685032	91.08733368	-0.2436931	3.527152061	0.286773354	-104.258438
F497	COMB3	0	5.102537632	52.04563141	0.81039232	1.124302387	0.728888392	95.90903473
F497	COMB3	0.75	5.102537632	59.53474426	0.81039232	1.124302387	0.121095337	54.6128006
F497	COMB3	1.5	5.102537632	75.76508331	0.81039232	1.124302387	-0.4866977	4.421793938
F497	COMB3	2.25	5.102537632	91.99542236	0.81039232	1.124302387	-1.09449089	-59.0345955
F497	COMB3	3	5.102537632	99.48452759	0.81039232	1.124302387	-1.70228386	-131.385757
F498	D	0	2.927291632	36.56593704	-0.14520533	-1.65723729	-0.16725425	89.71208191
F498	D	0.75	2.927291632	43.27655029	-0.14520533	-1.65723729	-0.05835047	60.2387886
F498	D	1.5	2.927291632	57.46839142	-0.14520533	-1.65723729	0.050553314	22.92708397
F498	D	2.25	2.927291632	71.66024017	-0.14520533	-1.65723729	0.159457102	-25.9636307
F498	D	3	2.927291632	78.37084198	-0.14520533	-1.65723729	0.268360883	-82.692749
F498	L	0	1.199296713	11.75879288	-0.00694662	-0.56772554	0.003554445	33.16413879
F498	L	0.75	1.199296713	14.43066216	-0.00694662	-0.56772554	0.008764399	23.67709541
F498	L	1.5	1.199296713	22.4462719	-0.00694662	-0.56772554	0.013974353	10.1822567
F498	L	2.25	1.199296713	30.46187973	-0.00694662	-0.56772554	0.019184306	-9.99224281
F498	L	3	1.199296713	33.1337471	-0.00694662	-0.56772554	0.024394261	-34.1745377
F498	EX	0	0.075269803	-0.38325244	-0.28611177	3.495090485	-0.57688683	-0.41645649
F498	EX	0.75	0.075269803	-0.38325244	-0.28611177	3.495090485	-0.36230344	-0.12901776
F498	EX	1.5	0.075269803	-0.38325244	-0.28611177	3.495090485	-0.14772001	0.158420965
F498	EX	2.25	0.075269803	-0.38325244	-0.28611177	3.495090485	0.06686341	0.4458597
F498	EX	3	0.075269803	-0.38325244	-0.28611177	3.495090485	0.281446815	0.733298481
F498	EY	0	-5.21539783	12.34227848	1.346609712	0.009646285	1.35141778	-2.78879309
F498	EY	0.75	-5.21539783	12.34227848	1.346609712	0.009646285	0.341462433	-12.0454836
F498	EY	1.5	-5.21539783	12.34227848	1.346609712	0.009646285	-0.66849285	-21.3021736
F498	EY	2.25	-5.21539783	12.34227848	1.346609712	0.009646285	-1.67844808	-30.5588646
F498	EY	3	-5.21539783	12.34227848	1.346609712	0.009646285	-2.68840337	-39.8155518
F498	COMB1	0	5.431624889	62.69319534	-0.185361	-2.89704561	-0.19501799	160.7171173
F498	COMB1	0.75	5.431624889	75.0209198	-0.185361	-2.89704561	-0.05599753	110.169899
F498	COMB1	1.5	5.431624889	104.8760986	-0.185361	-2.89704561	0.083022937	43.80411148
F498	COMB1	2.25	5.431624889	134.7312927	-0.185361	-2.89704561	0.22204341	-47.1439438
F498	COMB1	3	5.431624889	147.0590057	-0.185361	-2.89704561	0.361063898	-153.910568
F498	COMB2	0	1.886488676	45.58940506	-0.02659744	1.701524496	-0.3458786	103.3348846
F498	COMB2	0.75	1.886488676	53.4771843	-0.02659744	1.701524496	-0.3259306	66.78115082
F498	COMB2	1.5	1.886488676	70.90353394	-0.02659744	1.701524496	-0.30598256	20.73462868
F498	COMB2	2.25	1.886488676	88.32989502	-0.02659744	1.701524496	-0.28603452	-39.5739441
F498	COMB2	3	1.886488676	96.21766663	-0.02659744	1.701524496	-0.26608646	-109.375305
F498	COMB3	0	-2.00102282	54.93692398	1.169161201	-0.8078506	1.062771916	101.5849686
F498	COMB3	0.75	-2.00102282	62.82470322	1.169161201	-0.8078506	0.185902774	58.02061462
F498	COMB3	1.5	-2.00102282	80.25105286	1.169161201	-0.8078506	-0.69096643	4.963467598
F498	COMB3	2.25	-2.00102282	97.67741394	1.169161201	-0.8078506	-1.56783557	-62.355732
F498	COMB3	3	-2.00102282	105.5651855	1.169161201	-0.8078506	-2.44470453	-139.167709
F499	D	0	3.156187296	13.5447731	-0.10836884	12.44682884	-0.13540713	68.98823547
F499	D	0.75	3.156187296	27.75536919	-0.10836884	12.44682884	-0.05413067	53.96828842
F499	D	1.5	3.156187296	49.44720078	-0.10836884	12.44682884	0.027145799	25.48496246
F499	D	2.25	3.156187296	71.13903046	-0.10836884	12.44682884	0.108422264	-20.2023582
F499	D	3	3.156187296	85.34962463	-0.10836884	12.44682884	0.189698726	-79.3530655
F499	L	0	0.913610935	4.694439411	0.021528691	4.605904102	0.042936049	20.97318268
F499	L	0.75	0.913610935	7.366308689	0.021528691	4.605904102	0.026789567	16.78439522
F499	L	1.5	0.913610935	15.38191795	0.021528691	4.605904102	0.01064308	8.587810516
F499	L	2.25	0.913610935	23.39752579	0.021528691	4.605904102	-0.00550341	-6.28843546
F499	L	3	0.913610935	26.06939697	0.021528691	4.605904102	-0.02164989	-25.1724777
F499	EX	0	0.149207085	0.639061213	-0.3350873	2.721948624	-0.69279695	1.512078047
F499	EX	0.75	0.149207085	0.639061213	-0.3350873	2.721948624	-0.44148195	1.032783151
F499	EX	1.5	0.149207085	0.639061213	-0.3350873	2.721948624	-0.19016699	0.553488195
F499	EX	2.25	0.149207085	0.639061213	-0.3350873	2.721948624	0.061147992	0.074193232
F499	EX	3	0.149207085	0.639061213	-0.3350873	2.721948624	0.312462986	-0.40510172
F499	EY	0	-5.25639343	12.78203678	0.387328744	0.00213863	0.365130246	-2.89442754
F499	EY	0.75	-5.25639343	12.78203678	0.387328744	0.00213863	0.074634261	-12.4809351
F499	EY	1.5	-5.25639343	12.78203678	0.387328744	0.00213863	-0.21586172	-22.0674419
F499	EY	2.25	-5.25639343	12.78203678	0.387328744	0.00213863	-0.50635767	-31.6539497
F499	EY	3	-5.25639343	12.78203678	0.387328744	0.00213863	-0.79685366	-41.2404594
F499	COMB1	0	5.249202251	23.76482964	-0.09559671	22.30564117	-0.09379088	116.3429794
F499	COMB1	0.75	5.249202251	45.09253693	-0.09559671	22.30564117	-0.0220935	91.61698151
F499	COMB1	1.5	5.249202251	83.94770813	-0.09559671	22.30564117	0.049603887	44.32245255
F499	COMB1	2.25	5.249202251	122.8028717	-0.09559671	22.30564117	0.121301264	-34.3043251
F499	COMB1	3	5.249202251	144.1305847	-0.09559671	22.30564117	0.192998648	-135.499649
F499	COMB2	0	2.100449562	20.38852882	-0.33181256	17.33792114	-0.73068148	79.69745636
F499	COMB2	0.75	2.100449562	36.15129471	-0.33181256	17.33792114	-0.48182252	59.09122467
F499	COMB2	1.5	2.100449562	61.4526329	-0.33181256	17.33792114	-0.23296362	23.08598518
F499	COMB2	2.25	2.100449562	86.75396729	-0.33181256	17.33792114	0.015895305	-33.0875359
F499	COMB2	3	2.100449562	102.5167313	-0.33181256	17.33792114	0.264754236	-104.660072
F499	COMB3	0	-1.8704288	29.32320213	0.194136932	15.37969017	0.036503077	76.48135376
F499	COMB3	0.75	-1.8704288	45.08596802	0.194136932	15.37969017	-0.10909933	49.1741333
F499	COMB3	1.5	-1.8704288	70.38730621	0.194136932	15.37969017	-0.25470173	6.467904091
F499	COMB3	2.25	-1.8704288	95.68864441	0.194136932	15.37969017	-0.40030414	-56.4066086
F499	COMB3	3	-1.8704288	111.4514084	0.194136932	15.37969017	-0.54590654	-134.68013
F500	D	0	-2.6682322	-48.4182892	-0.0234491	0.374512017	-0.07390098	-35.7204323
F500	D	1.25	-2.6682322	-26.6729755	-0.0234491	0.374512017	-0.0445896	12.29396915
F500	D	2.5	-2.6682322	2.137956619	-0.0234491	0.374512017	-0.01527822	27.74092293
F500	D	3.75	-2.6682322	30.94889069	-0.0234491	0.374512017	0.014033152	6.949077129
F500	D	5	-2.6682322	52.69420242	-0.0234491	0.374512017	0.043344527	-46.4102173
F500	L	0	0.837370396	-12.7032843	0.002114741	0.346432239	0.003804297	-11.1741371

F500	L	1.25	0.837370396	-8.79703426	0.002114741	0.346432239	0.00116087	3.077364683
F500	L	2.5	0.837370396	0.421716362	0.002114741	0.346432239	-0.00148256	8.39657402
F500	L	3.75	0.837370396	9.64046669	0.002114741	0.346432239	-0.00412598	2.023073673
F500	L	5	0.837370396	13.54671669	0.002114741	0.346432239	-0.00676941	-13.2827187
F500	EX	0	-37.6684151	15.5812149	-0.22088185	0.048282761	-0.69497693	41.24759293
F500	EX	1.25	-37.6684151	15.5812149	-0.22088185	0.048282761	-0.41887462	21.7710743
F500	EX	2.5	-37.6684151	15.5812149	-0.22088185	0.048282761	-0.14277227	2.294555426
F500	EX	3.75	-37.6684151	15.5812149	-0.22088185	0.048282761	0.133330047	-17.181963
F500	EX	5	-37.6684151	15.5812149	-0.22088185	0.048282761	0.409432381	-36.6584854
F500	EY	0	-0.36528468	0.008632152	0.245991275	0.075120844	0.846323252	0.025756376
F500	EY	1.25	-0.36528468	0.008632152	0.245991275	0.075120844	0.538834155	0.014966185
F500	EY	2.5	-0.36528468	0.008632152	0.245991275	0.075120844	0.231345013	0.004175995
F500	EY	3.75	-0.36528468	0.008632152	0.245991275	0.075120844	-0.07614408	-0.0066142
F500	EY	5	-0.36528468	0.008632152	0.245991275	0.075120844	-0.3836332	-0.01740439
F500	COMB1	0	-1.86208618	-78.4272003	-0.02475533	1.003705978	-0.0825943	-60.7431374
F500	COMB1	1.25	-1.86208618	-46.0828247	-0.02475533	1.003705978	-0.05165013	19.6765461
F500	COMB1	2.5	-1.86208618	3.24029398	-0.02475533	1.003705978	-0.02070596	46.72362518
F500	COMB1	3.75	-1.86208618	52.56341553	-0.02475533	1.003705978	0.01023821	11.57581043
F500	COMB1	5	-1.86208618	84.90779114	-0.02475533	1.003705978	0.041182376	-76.9446106
F500	COMB2	0	-41.6397476	-38.7114639	-0.17508088	0.575999498	-0.52910697	1.673065543
F500	COMB2	1.25	-41.6397476	-14.6484146	-0.17508088	0.575999498	-0.31025589	36.41581345
F500	COMB2	2.5	-41.6397476	18.50697136	-0.17508088	0.575999498	-0.09140477	34.14907074
F500	COMB2	3.75	-41.6397476	51.66235733	-0.17508088	0.575999498	0.127446339	-9.85161686
F500	COMB2	5	-41.6397476	75.72540283	-0.17508088	0.575999498	0.346297443	-90.8617935
F500	COMB3	0	-14.786972	-49.9235916	0.164757639	0.596449733	0.593324006	-28.0062714
F500	COMB3	1.25	-14.786972	-25.8605442	0.164757639	0.596449733	0.387376934	20.75164032
F500	COMB3	2.5	-14.786972	7.29484129	0.164757639	0.596449733	0.181429848	32.50006104
F500	COMB3	3.75	-14.786972	40.45022964	0.164757639	0.596449733	-0.0245172	2.514535666
F500	COMB3	5	-14.786972	64.51327515	0.164757639	0.596449733	-0.23046426	-64.4804764
F501	D	0	-1.64022028	-50.1803055	-0.09234449	-0.14776483	-0.22359583	-44.4630432
F501	D	1.25	-1.64022028	-28.4349918	-0.09234449	-0.14776483	-0.10816521	5.753873825
F501	D	2.5	-1.64022028	0.375942379	-0.09234449	-0.14776483	0.007265396	23.40334511
F501	D	3.75	-1.64022028	29.1868763	-0.09234449	-0.14776483	0.122696012	4.81401825
F501	D	5	-1.64022028	50.93218613	-0.09234449	-0.14776483	0.238126606	-46.3427544
F501	L	0	0.876839221	-12.979888	-0.01609941	-0.03241515	-0.03849206	-12.8500261
F501	L	1.25	0.876839221	-9.07363892	-0.01609941	-0.03241515	-0.0183678	1.747230649
F501	L	2.5	0.876839221	0.14511165	-0.01609941	-0.03241515	0.001756462	7.412195683
F501	L	3.75	0.876839221	9.363862038	-0.01609941	-0.03241515	0.021880725	1.38445509
F501	L	5	0.876839221	13.27011204	-0.01609941	-0.03241515	0.042004988	-13.5755844
F501	EX	0	-28.5571251	13.78740692	-0.15867524	0.005941017	-0.34427035	34.32196426
F501	EX	1.25	-28.5571251	13.78740692	-0.15867524	0.005941017	-0.14592627	17.0877037
F501	EX	2.5	-28.5571251	13.78740692	-0.15867524	0.005941017	0.052417792	-0.1465553
F501	EX	3.75	-28.5571251	13.78740692	-0.15867524	0.005941017	0.250761867	-17.3808155
F501	EX	5	-28.5571251	13.78740692	-0.15867524	0.005941017	0.449105918	-34.6150742
F501	EY	0	-1.69805241	0.030973287	1.06643033	0.160907626	2.578717232	0.076660916
F501	EY	1.25	-1.69805241	0.030973287	1.06643033	0.160907626	1.24567914	0.037944302
F501	EY	2.5	-1.69805241	0.030973287	1.06643033	0.160907626	-0.08735886	-0.00077231
F501	EY	3.75	-1.69805241	0.030973287	1.06643033	0.160907626	-1.4203968	-0.03948892
F501	EY	5	-1.69805241	0.030973287	1.06643033	0.160907626	-2.7534349	-0.07820553
F501	COMB1	0	-0.56532156	-80.9841843	-0.13657244	-0.22918203	-0.32990229	-73.9156952
F501	COMB1	1.25	-0.56532156	-48.6398125	-0.13657244	-0.22918203	-0.15918674	9.700217247
F501	COMB1	2.5	-0.56532156	0.683309495	-0.13657244	-0.22918203	0.011528813	39.94352722
F501	COMB1	3.75	-0.56532156	50.00642776	-0.13657244	-0.22918203	0.182244375	7.991944313
F501	COMB1	5	-0.56532156	82.35080719	-0.13657244	-0.22918203	0.352959901	-77.3322449
F501	COMB2	0	-31.5375385	-42.4982605	0.069663659	-0.10852899	0.209075496	-15.1865721
F501	COMB2	1.25	-31.5375385	-18.435215	0.069663659	-0.10852899	0.121995904	24.28967094
F501	COMB2	2.5	-31.5375385	14.72017288	0.069663659	-0.10852899	0.034916323	26.75642586
F501	COMB2	3.75	-31.5375385	47.87555695	0.069663659	-0.10852899	-0.05216325	-12.5107613
F501	COMB2	5	-31.5375385	71.93860626	0.069663659	-0.10852899	-0.13924284	-88.7874374
F501	COMB3	0	-12.2244768	-52.4024277	0.967736125	0.005460577	2.35230732	-39.842041
F501	COMB3	1.25	-12.2244768	-28.3393822	0.967736125	0.005460577	1.142637014	12.01441383
F501	COMB3	2.5	-12.2244768	4.816004753	0.967736125	0.005460577	-0.06703325	26.86137772
F501	COMB3	3.75	-12.2244768	37.97138977	0.967736125	0.005460577	-1.27670348	-0.02559878
F501	COMB3	5	-12.2244768	62.03443909	0.967736125	0.005460577	-2.48637366	-63.9220657
F502	D	0	-1.79346716	-50.4682236	0.00261553	-0.00135381	0.042409893	-45.0604019
F502	D	1.25	-1.79346716	-28.7229137	0.00261553	-0.00135381	0.039140478	5.516420364
F502	D	2.5	-1.79346716	0.088020563	0.00261553	-0.00135381	0.03587107	23.52579308
F502	D	3.75	-1.79346716	28.89895439	0.00261553	-0.00135381	0.032601655	5.296368599
F502	D	5	-1.79346716	50.64426422	0.00261553	-0.00135381	0.029332243	-45.5005035
F502	L	0	0.785212636	-13.0151539	0.002030977	0.006668854	0.012548828	-13.0075207
F502	L	1.25	0.785212636	-9.10890388	0.002030977	0.006668854	0.010010106	1.633817315
F502	L	2.5	0.785212636	0.109846629	0.002030977	0.006668854	0.007471385	7.34286356
F502	L	3.75	0.785212636	9.328596115	0.002030977	0.006668854	0.004932663	1.359200835
F502	L	5	0.785212636	13.23484707	0.002030977	0.006668854	0.002393942	-13.5567541
F502	EX	0	-21.0932102	13.83887577	0.387505621	0.015253989	0.941377044	34.61911774
F502	EX	1.25	-21.0932102	13.83887577	0.387505621	0.015253989	0.456994981	17.32052231
F502	EX	2.5	-21.0932102	13.83887577	0.387505621	0.015253989	-0.02738706	0.021926701
F502	EX	3.75	-21.0932102	13.83887577	0.387505621	0.015253989	-0.51176906	-17.2766685
F502	EX	5	-21.0932102	13.83887577	0.387505621	0.015253989	-0.99615115	-34.575264
F502	EY	0	-2.70434976	-6.6081E-07	-1.4795E-05	3.25847E-06	-0.5160808	-0.00419661
F502	EY	1.25	-2.70434976	-6.6081E-07	-1.4795E-05	3.25847E-06	-0.51606232	-0.00419578
F502	EY	2.5	-2.70434976	-6.6081E-07	-1.4795E-05	3.25847E-06	-0.51604384	-0.00419496
F502	EY	3.75	-2.70434976	-6.6081E-07	-1.4795E-05	3.25847E-06	-0.5160253	-0.00419413
F502	EY	5	-2.70434976	-6.6081E-07	-1.4795E-05	3.25847E-06	-0.51600683	-0.00419331

F502	COMB1	0	-0.89582038	-81.386116	0.006388199	0.009045596	0.070969999	-74.8845139
F502	COMB1	1.25	-0.89582038	-49.0417404	0.006388199	0.009045596	0.062984742	9.233812332
F502	COMB1	2.5	-0.89582038	0.281379282	0.006388199	0.009045596	0.054999501	39.97953415
F502	COMB1	3.75	-0.89582038	49.60449982	0.006388199	0.009045596	0.047014248	8.530364037
F502	COMB1	5	-0.89582038	81.94887543	0.006388199	0.009045596	0.039028998	-76.2914124
F502	COMB2	0	-24.3191414	-42.7681694	0.404449731	0.016468095	0.860243082	-15.5813265
F502	COMB2	1.25	-24.3191414	-18.7051277	0.404449731	0.016468095	0.354680836	24.23231316
F502	COMB2	2.5	-24.3191414	14.45026016	0.404449731	0.016468095	-0.15088131	27.03645706
F502	COMB2	3.75	-24.3191414	47.60564423	0.404449731	0.016468095	-0.65644342	-11.8933382
F502	COMB2	5	-24.3191414	71.66869354	0.404449731	0.016468095	-1.16200566	-87.8326263
F502	COMB3	0	-11.1197271	-52.7321625	0.125434801	0.005487618	-0.19686778	-40.5101738
F502	COMB3	1.25	-11.1197271	-28.6691189	0.125434801	0.005487618	-0.35366133	11.75845242
F502	COMB3	2.5	-11.1197271	4.48626852	0.125434801	0.005487618	-0.51045483	27.01758766
F502	COMB3	3.75	-11.1197271	37.64165497	0.125434801	0.005487618	-0.66724831	0.542780697
F502	COMB3	5	-11.1197271	61.70470047	0.125434801	0.005487618	-0.82404184	-62.9415169
F503	D	0	-1.73788416	-50.7142258	0.096506923	0.159104615	0.248058558	-45.8530693
F503	D	1.25	-1.73788416	-28.9689159	0.096506923	0.159104615	0.127424881	5.031250954
F503	D	2.5	-1.73788416	-0.15798171	0.096506923	0.159104615	0.006791224	23.34812927
F503	D	3.75	-1.73788416	28.65295219	0.096506923	0.159104615	-0.11384244	5.426205158
F503	D	5	-1.73788416	50.39826584	0.096506923	0.159104615	-0.23447609	-45.0631638
F503	L	0	0.857884645	-13.2912436	0.019558581	0.248436272	0.050885055	-13.6511078
F503	L	1.25	0.857884645	-9.3849926	0.019558581	0.248436272	0.026436826	1.335342646
F503	L	2.5	0.857884645	-0.16624284	0.019558581	0.248436272	0.001988598	7.389500618
F503	L	3.75	0.857884645	9.052507401	0.019558581	0.248436272	-0.02245963	1.75094974
F503	L	5	0.857884645	12.9587574	0.019558581	0.248436272	-0.04690786	-12.8198929
F503	EX	0	-13.8359175	13.69746208	-0.0489803	0.005682519	-0.21510649	34.42225266
F503	EX	1.25	-13.8359175	13.69746208	-0.0489803	0.005682519	-0.1538811	17.30042839
F503	EX	2.5	-13.8359175	13.69746208	-0.0489803	0.005682519	-0.09265573	0.178599164
F503	EX	3.75	-13.8359175	13.69746208	-0.0489803	0.005682519	-0.03143034	-16.9432297
F503	EX	5	-13.8359175	13.69746208	-0.0489803	0.005682519	0.029795043	-34.0650558
F503	EY	0	-1.69803369	-0.03097504	-1.06642056	-0.16091071	-2.75340199	-0.07820991
F503	EY	1.25	-1.69803369	-0.03097504	-1.06642056	-0.16091071	-1.4203763	-0.03949111
F503	EY	2.5	-1.69803369	-0.03097504	-1.06642056	-0.16091071	-0.08735055	-0.00077231
F503	EY	3.75	-1.69803369	-0.03097504	-1.06642056	-0.16091071	1.245675206	0.037946492
F503	EY	5	-1.69803369	-0.03097504	-1.06642056	-0.16091071	2.578701019	0.076665297
F503	COMB1	0	-0.71284556	-82.1230621	0.147102043	0.58842355	0.379086345	-76.8654556
F503	COMB1	1.25	-0.71284556	-49.7786865	0.147102043	0.58842355	0.195208773	8.174049377
F503	COMB1	2.5	-0.71284556	-0.45556659	0.147102043	0.58842355	0.011331226	39.84095383
F503	COMB1	3.75	-0.71284556	48.86755371	0.147102043	0.58842355	-0.17254633	9.312965393
F503	COMB1	5	-0.71284556	81.21192932	0.147102043	0.58842355	-0.35642388	-74.5876236
F503	COMB2	0	-16.4095993	-43.2695618	-0.27912387	0.200511813	-0.81346661	-16.8434258
F503	COMB2	1.25	-16.4095993	-19.2065182	-0.27912387	0.200511813	-0.46456176	23.59694862
F503	COMB2	2.5	-16.4095993	13.94886875	-0.27912387	0.200511813	-0.1156569	27.02783394
F503	COMB2	3.75	-16.4095993	47.10425568	-0.27912387	0.200511813	0.233247921	-11.2752247
F503	COMB2	5	-16.4095993	71.16730499	-0.27912387	0.200511813	0.582152843	-86.5877686
F503	COMB3	0	-7.69579411	-53.1545029	-1.02767718	0.078151025	-2.68234038	-41.6849327
F503	COMB3	1.25	-7.69579411	-29.0914574	-1.02767718	0.078151025	-1.39774394	11.11161518
F503	COMB3	2.5	-7.69579411	4.063929558	-1.02767718	0.078151025	-0.11314744	26.89867592
F503	COMB3	3.75	-7.69579411	37.21931458	-1.02767718	0.078151025	1.171449065	0.951791167
F503	COMB3	5	-7.69579411	61.28236389	-1.02767718	0.078151025	2.456045628	-62.0045815
F504	D	0	-2.75142264	-52.7823563	0.026727021	-0.05854712	0.05014487	-46.6719017
F504	D	1.25	-2.75142264	-31.0370445	0.026727021	-0.05854712	0.016736092	6.797579288
F504	D	2.5	-2.75142264	-2.22611022	0.026727021	-0.05854712	-0.01667269	27.69961739
F504	D	3.75	-2.75142264	26.58482361	0.026727021	-0.05854712	-0.05008147	12.362854
F504	D	5	-2.75142264	48.37013535	0.026727021	-0.05854712	-0.08349025	-35.5413513
F504	L	0	0.841964722	-13.4417858	0.002934557	-0.21944499	0.004731966	-13.0117188
F504	L	1.25	0.841964722	-9.53553677	0.002934557	-0.21944499	0.00106377	2.162910223
F504	L	2.5	0.841964722	-0.31678569	0.002934557	-0.21944499	-0.00260443	8.405247688
F504	L	3.75	0.841964722	8.901964188	0.002934557	-0.21944499	-0.00627262	2.954874516
F504	L	5	0.841964722	12.80821514	0.002934557	-0.21944499	-0.00994082	-11.4277897
F504	EX	0	-5.48922014	15.35371971	0.115088649	0.046213564	0.273870319	36.18619156
F504	EX	1.25	-5.48922014	15.35371971	0.115088649	0.046213564	0.130009517	16.99403954
F504	EX	2.5	-5.48922014	15.35371971	0.115088649	0.046213564	-0.0138513	-2.1981101
F504	EX	3.75	-5.48922014	15.35371971	0.115088649	0.046213564	-0.15771212	-21.3902607
F504	EX	5	-5.48922014	15.35371971	0.115088649	0.046213564	-0.30157292	-40.5824089
F504	EY	0	-0.36527881	-0.00863399	-0.245988	-0.07512189	-0.38362679	-0.01740871
F504	EY	1.25	-0.36527881	-0.00863399	-0.245988	-0.07512189	-0.0761418	-0.00661622
F504	EY	2.5	-0.36527881	-0.00863399	-0.245988	-0.07512189	0.23134318	0.004176263
F504	EY	3.75	-0.36527881	-0.00863399	-0.245988	-0.07512189	0.538828135	0.014968749
F504	EY	5	-0.36527881	-0.00863399	-0.245988	-0.07512189	0.846313119	0.025761236
F504	COMB1	0	-1.9545635	-84.8456879	0.036767714	-0.42136854	0.067744993	-76.8250351
F504	COMB1	1.25	-1.9545635	-52.5013123	0.036767714	-0.42136854	0.021785343	11.61775208
F504	COMB1	2.5	-1.9545635	-3.17818928	0.036767714	-0.42136854	-0.0241743	46.68793488
F504	COMB1	3.75	-1.9545635	46.14493179	0.036767714	-0.42136854	-0.07013395	19.56322479
F504	COMB1	5	-1.9545635	78.48930359	0.036767714	-0.42136854	-0.1160936	-60.9340858
F504	COMB2	0	-8.42018032	-43.7672577	0.070618294	-0.10643201	0.216756031	-15.6569662
F504	COMB2	1.25	-8.42018032	-19.7042103	0.070618294	-0.10643201	0.128483176	25.40552139
F504	COMB2	2.5	-8.42018032	13.4511776	0.070618294	-0.10643201	0.040210292	29.4585228
F504	COMB2	3.75	-8.42018032	46.60656357	0.070618294	-0.10643201	-0.04806259	-8.2224226
F504	COMB2	5	-8.42018032	70.66960907	0.070618294	-0.10643201	-0.13633545	-82.9128571
F504	COMB3	0	-4.73642206	-54.8282814	-0.1930467	-0.19492036	-0.26239631	-41.7238197
F504	COMB3	1.25	-4.73642206	-30.765234	-0.1930467	-0.19492036	-0.02108791	13.16495037
F504	COMB3	2.5	-4.73642206	2.390152931	-0.1930467	-0.19492036	0.220220461	31.04423141
F504	COMB3	3.75	-4.73642206	35.54553986	-0.1930467	-0.19492036	0.461528838	7.189567566

F504	COMB3	5	-4.73642206	59.60858536	-0.1930467	-0.19492036	0.702837229	-53.6745834
F505	D	0	-174.745834	-11.6942806	-19.1274681	0.841754496	-35.2329521	-24.0354881
F505	D	2	-167.065842	-11.6942806	-19.1274681	0.841754496	3.021981001	-0.64692926
F505	D	4	-159.385849	-11.6942806	-19.1274681	0.841754496	41.27691269	22.74162865
F505	L	0	-16.3020821	-3.09037066	-3.53497314	0.038693205	-6.45679712	-5.45809221
F505	L	2	-16.3020821	-3.09037066	-3.53497314	0.038693205	0.613148928	0.72264874
F505	L	4	-16.3020821	-3.09037066	-3.53497314	0.038693205	7.683094978	6.903389454
F505	EX	0	11.41434288	9.652618408	0.305068254	0.077795081	0.567578554	15.6453886
F505	EX	2	11.41434288	9.652618408	0.305068254	0.077795081	-0.04255783	-3.65984774
F505	EX	4	11.41434288	9.652618408	0.305068254	0.077795081	-0.65269423	-22.9650841
F505	EY	0	6.661866665	0.020171372	8.604032516	-0.05863807	13.94074821	0.033252981
F505	EY	2	6.661866665	0.020171372	8.604032516	-0.05863807	-3.2673142	-0.00708976
F505	EY	4	6.661866665	0.020171372	8.604032516	-0.05863807	-20.4753761	-0.04743251
F505	COMB1	0	-235.778336	-18.9777298	-28.6089191	1.072014451	-52.6104164	-37.5755348
F505	COMB1	2	-226.562347	-18.9777298	-28.6089191	1.072014451	4.607415676	0.379922926
F505	COMB1	4	-217.346344	-18.9777298	-28.6089191	1.072014451	61.8252449	38.33537674
F505	COMB2	0	-174.705948	-3.25564742	-18.1713428	0.95807749	-34.0497093	-10.7531099
F505	COMB2	2	-166.641953	-3.25564742	-18.1713428	0.95807749	2.292970657	-4.241817
F505	COMB2	4	-158.577957	-3.25564742	-18.1713428	0.95807749	38.63565063	2.269475698
F505	COMB3	0	-178.027802	-10.1907072	-12.0670271	0.858966053	-24.211916	-21.9933491
F505	COMB3	2	-169.963806	-10.1907072	-12.0670271	0.858966053	-0.07786358	-1.61193764
F505	COMB3	4	-161.899811	-10.1907072	-12.0670271	0.858966053	24.05618858	18.76947403
F506	D	0	-250.346756	1.395941496	-23.4479198	0.575183868	-43.2322998	1.884187341
F506	D	2	-242.666748	1.395941496	-23.4479198	0.575183868	3.663535357	-0.90769511
F506	D	4	-234.986755	1.395941496	-23.4479198	0.575183868	50.55937195	-3.69957757
F506	L	0	-37.8229904	0.10147056	-7.4661212	0.005449416	-13.708849	0.209050059
F506	L	2	-37.8229904	0.10147056	-7.4661212	0.005449416	1.223393083	0.006108966
F506	L	4	-37.8229904	0.10147056	-7.4661212	0.005449416	16.15563583	-0.19683214
F506	EX	0	-3.75386667	16.10923004	-0.00297033	-0.17920978	-0.04150002	29.40034294
F506	EX	2	-3.75386667	16.10923004	-0.00297033	-0.17920978	-0.03555937	-2.81811595
F506	EX	4	-3.75386667	16.10923004	-0.00297033	-0.17920978	-0.02961871	-35.0365753
F506	EY	0	6.528960228	-0.13855153	8.526339531	0.068804018	13.988657	-0.27312368
F506	EY	2	6.528960228	-0.13855153	8.526339531	0.068804018	-3.06402016	0.003979333
F506	EY	4	6.528960228	-0.13855153	8.526339531	0.068804018	-20.1166973	0.281082362
F506	COMB1	0	-360.932892	1.837482572	-40.0832977	0.698939741	-73.8129196	2.595504999
F506	COMB1	2	-351.716888	1.837482572	-40.0832977	0.698939741	6.353671551	-1.07945979
F506	COMB1	4	-342.500885	1.837482572	-40.0832977	0.698939741	86.52026367	-4.75442457
F506	COMB2	0	-276.606964	18.12711143	-24.289423	0.441850781	-45.3487282	32.38756943
F506	COMB2	2	-268.542969	18.12711143	-24.289423	0.441850781	3.230110884	-3.86665225
F506	COMB2	4	-260.478943	18.12711143	-24.289423	0.441850781	51.80894852	-40.1208725
F506	COMB3	0	-269.105408	6.426630497	-18.0204239	0.621452808	-35.0371857	11.01857567
F506	COMB3	2	-261.041382	6.426630497	-18.0204239	0.621452808	1.003658772	-1.83468378
F506	COMB3	4	-252.977386	6.426630497	-18.0204239	0.621452808	37.04450226	-14.6879435
F507	D	0	-154.359116	4.674499512	-12.7247839	0.811352134	-22.1370316	8.547168732
F507	D	2	-146.679108	4.674499512	-12.7247839	0.811352134	3.312534094	-0.80182964
F507	D	4	-138.999115	4.674499512	-12.7247839	0.811352134	28.76210213	-10.1508284
F507	L	0	-22.6710644	1.646242738	-3.6981585	-0.0029165	-6.3780303	2.996472359
F507	L	2	-22.6710644	1.646242738	-3.6981585	-0.0029165	1.018286109	-0.29601279
F507	L	4	-22.6710644	1.646242738	-3.6981585	-0.0029165	8.41460228	-3.58849812
F507	EX	0	-1.16394961	15.6224308	-0.45789221	1.408458114	-0.543338	27.44327736
F507	EX	2	-1.16394961	15.6224308	-0.45789221	1.408458114	0.372446358	-3.80158186
F507	EX	4	-1.16394961	15.6224308	-0.45789221	1.408458114	1.288230777	-35.0464401
F507	EY	0	7.010828972	-0.15979487	9.688792229	0.01234986	16.10292625	-0.27747211
F507	EY	2	7.010828972	-0.15979487	9.688792229	0.01234986	-3.27465749	0.042117596
F507	EY	4	7.010828972	-0.15979487	9.688792229	0.01234986	-22.6522408	0.3617073
F507	COMB1	0	-221.504639	8.243388176	-21.1867943	0.968956172	-36.7692871	15.05095863
F507	COMB1	2	-212.288635	8.243388176	-21.1867943	0.968956172	5.604298592	-1.43581605
F507	COMB1	4	-203.072647	8.243388176	-21.1867943	0.968956172	47.9778862	-17.9225903
F507	COMB2	0	-168.214722	21.54567146	-11.9478922	2.312645435	-20.742897	38.23480225
F507	COMB2	2	-160.150726	21.54567146	-11.9478922	2.312645435	3.152885675	-4.85653543
F507	COMB2	4	-152.086731	21.54567146	-11.9478922	2.312645435	27.04866982	-47.9478722
F507	COMB3	0	-162.223724	10.18007183	-4.49694729	1.307632685	-8.51604366	18.27170181
F507	COMB3	2	-154.159729	10.18007183	-4.49694729	1.307632685	0.477851093	-2.08843994
F507	COMB3	4	-146.095734	10.18007183	-4.49694729	1.307632685	9.471745491	-22.4485817
F508	D	0	-154.205551	-4.35727167	-12.7065601	-0.81031758	-22.1050148	-7.95468473
F508	D	2	-146.525543	-4.35727167	-12.7065601	-0.81031758	3.308104038	0.759857774
F508	D	4	-138.845551	-4.35727167	-12.7065601	-0.81031758	28.72122192	9.47440052
F508	L	0	-23.4425392	-1.54504395	-3.91718912	0.006826651	-6.76213551	-2.79187751
F508	L	2	-23.4425392	-1.54504395	-3.91718912	0.006826651	1.072241545	0.298209995
F508	L	4	-23.4425392	-1.54504395	-3.91718912	0.006826651	8.906618118	3.388297558
F508	EX	0	1.071513653	15.54221153	0.45276919	1.466858506	0.534211934	27.30336761
F508	EX	2	1.071513653	15.54221153	0.45276919	1.466858506	-0.37132633	-3.78105092
F508	EX	4	1.071513653	15.54221153	0.45276919	1.466858506	-1.27686453	-34.8654709
F508	EY	0	7.01082325	0.159795597	9.688777924	-0.01234933	16.10290337	0.277473629
F508	EY	2	7.01082325	0.159795597	9.688777924	-0.01234933	-3.27465081	-0.04211755
F508	EY	4	7.01082325	0.159795597	9.688777924	-0.01234933	-22.6522045	-0.3617087
F508	COMB1	0	-222.554718	-7.70079613	-21.5153751	-0.96145844	-37.3454323	-14.0126257
F508	COMB1	2	-213.338715	-7.70079613	-21.5153751	-0.96145844	5.685311317	1.388965368
F508	COMB1	4	-204.122726	-7.70079613	-21.5153751	-0.96145844	48.71605682	16.79055595
F508	COMB2	0	-165.982788	11.07470036	-11.0552216	0.665625513	-19.7150135	19.11453056
F508	COMB2	2	-157.918793	11.07470036	-11.0552216	0.665625513	2.395427465	-3.034868
F508	COMB2	4	-149.854797	11.07470036	-11.0552216	0.665625513	24.505867	-25.184267
F508	COMB3	0	-161.601334	0.001758094	-4.25996351	-0.39958939	-8.26401234	-0.33995181
F508	COMB3	2	-153.537338	0.001758094	-4.25996351	-0.39958939	0.255914092	-0.34346768

F508	COMB3	4	-145.473328	0.001758094	-4.25996351	-0.39958939	8.775839806	-0.34698346
F509	D	0	-250.719284	-1.3567698	-23.5929718	-0.58117145	-43.4759712	-1.77648664
F509	D	2	-243.039291	-1.3567698	-23.5929718	-0.58117145	3.709969521	0.937052548
F509	D	4	-235.359299	-1.3567698	-23.5929718	-0.58117145	50.89591217	3.650592089
F509	L	0	-47.0873299	-0.073806	-9.86374378	-0.01286405	-18.1073608	-0.1319034
F509	L	2	-47.0873299	-0.073806	-9.86374378	-0.01286405	1.62012434	0.015708575
F509	L	4	-47.0873299	-0.073806	-9.86374378	-0.01286405	21.34760857	0.163320541
F509	EX	0	3.696095228	15.9172163	0.004796057	-0.1808321	0.043455835	29.00658226
F509	EX	2	3.696095228	15.9172163	0.004796057	-0.1808321	0.033863723	-2.82784677
F509	EX	4	3.696095228	15.9172163	0.004796057	-0.1808321	0.024271613	-34.6622734
F509	EY	0	6.528957844	0.138555184	8.52633667	-0.06880035	13.98865032	0.273132473
F509	EY	2	6.528957844	0.138555184	8.52633667	-0.06880035	-3.06402063	-0.00397786
F509	EY	4	6.528957844	0.138555184	8.52633667	-0.06880035	-20.1166916	-0.2810882
F509	COMB1	0	-376.202881	-1.74621332	-44.0935555	-0.71798819	-81.1429443	-2.34282947
F509	COMB1	2	-366.986877	-1.74621332	-44.0935555	-0.71798819	7.044162273	1.14959681
F509	COMB1	4	-357.770874	-1.74621332	-44.0935555	-0.71798819	95.23126984	4.642023087
F509	COMB2	0	-272.205688	15.07010651	-25.18894	-0.82311553	-46.9021873	28.20098877
F509	COMB2	2	-264.141693	15.07010651	-25.18894	-0.82311553	3.47568965	-1.93922102
F509	COMB2	4	-256.077698	15.07010651	-25.18894	-0.82311553	53.85356522	-32.0794296
F509	COMB3	0	-270.068085	3.711548805	-18.9255352	-0.74348468	-36.6518173	7.517001629
F509	COMB3	2	-262.004089	3.711548805	-18.9255352	-0.74348468	1.199252605	0.093904905
F509	COMB3	4	-253.940094	3.711548805	-18.9255352	-0.74348468	39.05032349	-7.32919168
F510	D	0	-188.576233	11.53068256	-22.5946445	-0.84720498	-41.6094742	23.7824192
F510	D	2	-180.89624	11.53068256	-22.5946445	-0.84720498	3.579811335	0.721055806
F510	D	4	-173.216232	11.53068256	-22.5946445	-0.84720498	48.76909637	-22.3403072
F510	L	0	-31.1147881	3.15738225	-7.28189564	-0.05169626	-13.3324976	5.597571373
F510	L	2	-31.1147881	3.15738225	-7.28189564	-0.05169626	1.231291294	-0.71719235
F510	L	4	-31.1147881	3.15738225	-7.28189564	-0.05169626	15.79508114	-7.03195572
F510	EX	0	-11.2647915	9.348789215	-0.30232525	0.022939762	-0.56244743	15.15102291
F510	EX	2	-11.2647915	9.348789215	-0.30232525	0.022939762	0.042203002	-3.54655433
F510	EX	4	-11.2647915	9.348789215	-0.30232525	0.022939762	0.646853447	-22.2441311
F510	EY	0	6.661867619	-0.02016865	8.604034424	0.058638647	13.94075203	-0.03324556
F510	EY	2	6.661867619	-0.02016865	8.604034424	0.058638647	-3.26731563	0.007091729
F510	EY	4	6.661867619	-0.02016865	8.604034424	0.058638647	-20.4753838	0.047429014
F510	COMB1	0	-276.075134	18.88862991	-38.7646065	-1.09935999	-71.2633667	37.49501801
F510	COMB1	2	-266.859131	18.88862991	-38.7646065	-1.09935999	6.265839577	-0.2822408
F510	COMB1	4	-257.643158	18.88862991	-38.7646065	-1.09935999	83.79504395	-38.0594978
F510	COMB2	0	-217.366776	22.77143478	-23.6208096	-0.86363572	-44.0804787	42.40561295
F510	COMB2	2	-209.30278	22.77143478	-23.6208096	-0.86363572	3.161134481	-3.13725686
F510	COMB2	4	-201.23877	22.77143478	-23.6208096	-0.86363572	50.40274811	-48.6801262
F510	COMB3	0	-204.35965	16.02548409	-17.0791702	-0.83705294	-33.4290657	31.47243881
F510	COMB3	2	-196.295654	16.02548409	-17.0791702	-0.83705294	0.729271173	-0.5785253
F510	COMB3	4	-188.231659	16.02548409	-17.0791702	-0.83705294	34.88760757	-32.6294899
F511	D	0	-260.750732	-19.655714	1.497211576	0.708297253	2.382106066	-39.2355042
F511	D	2	-253.070755	-19.655714	1.497211576	0.708297253	-0.61231697	0.075921454
F511	D	4	-245.390732	-19.655714	1.497211576	0.708297253	-3.60674	39.38734818
F511	L	0	-35.838665	-6.24530315	0.294690728	0.016370306	0.457713544	-11.3441381
F511	L	2	-35.838665	-6.24530315	0.294690728	0.016370306	-0.13166776	1.146466732
F511	L	4	-35.838665	-6.24530315	0.294690728	0.016370306	-0.72104907	13.63707256
F511	EX	0	11.35801601	9.656476021	0.13950257	-0.0400537	0.237736702	15.22031593
F511	EX	2	11.35801601	9.656476021	0.13950257	-0.0400537	-0.04126842	-4.0926342
F511	EX	4	11.35801601	9.656476021	0.13950257	-0.0400537	-0.32027352	-23.4055843
F511	EY	0	-0.82664543	0.028511729	13.71186161	-0.02550803	25.20094872	0.033172693
F511	EY	2	-0.82664543	0.028511729	13.71186161	-0.02550803	-2.22277164	-0.02385076
F511	EY	4	-0.82664543	0.028511729	13.71186161	-0.02550803	-29.6464939	-0.08087422
F511	COMB1	0	-370.242767	-33.5793419	2.268159151	0.876149237	3.59086895	-65.233223
F511	COMB1	2	-361.026764	-33.5793419	2.268159151	0.876149237	-0.94544876	1.92545259
F511	COMB1	4	-351.81073	-33.5793419	2.268159151	0.876149237	-5.4817667	69.08412933
F511	COMB2	0	-273.582306	-12.6023359	6.128521442	0.699378192	10.8297472	-29.0072041
F511	COMB2	2	-265.518311	-12.6023359	6.128521442	0.699378192	-1.42729402	-3.80253482
F511	COMB2	4	-257.454285	-12.6023359	6.128521442	0.699378192	-13.6843357	21.40213585
F511	COMB3	0	-282.367676	-19.5340424	16.10629845	0.709468424	29.18127441	-39.941452
F511	COMB3	2	-274.30368	-19.5340424	16.10629845	0.709468424	-3.03131795	-0.8733685
F511	COMB3	4	-266.239655	-19.5340424	16.10629845	0.709468424	-35.2439117	38.19471359
F512	D	0	-346.681885	-7.17531633	2.016016722	0.544403672	3.258757114	-14.6079693
F512	D	2	-339.001892	-7.17531633	2.016016722	0.544403672	-0.77327591	-0.25733855
F512	D	4	-331.321869	-7.17531633	2.016016722	0.544403672	-4.80530882	14.09329224
F512	L	0	-82.1554642	-0.54886383	0.447468579	0.005058437	0.671592653	-1.05003178
F512	L	2	-82.1554642	-0.54886383	0.447468579	0.005058437	-0.2233444	0.047695775
F512	L	4	-82.1554642	-0.54886383	0.447468579	0.005058437	-1.11828148	1.145423293
F512	EX	0	-2.47441769	16.81712723	0.03108938	-0.0636415	0.016574908	30.63600731
F512	EX	2	-2.47441769	16.81712723	0.03108938	-0.0636415	-0.04560385	-2.99824286
F512	EX	4	-2.47441769	16.81712723	0.03108938	-0.0636415	-0.10778261	-36.6324921
F512	EY	0	-0.93177021	0.030860709	13.59919834	0.029324111	25.11725616	0.046999998
F512	EY	2	-0.93177021	0.030860709	13.59919834	0.029324111	-2.08113956	-0.01472141
F512	EY	4	-0.93177021	0.030860709	13.59919834	0.029324111	-29.2795334	-0.07644282
F512	COMB1	0	-547.46698	-9.48856163	3.135169744	0.661377907	4.985056877	-19.2096138
F512	COMB1	2	-538.250977	-9.48856163	3.135169744	0.661377907	-1.28528214	-0.23249303
F512	COMB1	4	-529.035034	-9.48856163	3.135169744	0.661377907	-7.55562115	18.74462891
F512	COMB2	0	-392.749481	9.708473206	6.573695183	0.51658541	11.56233692	16.05394554
F512	COMB2	2	-384.685486	9.708473206	6.573695183	0.51658541	-1.58505213	-3.36299992
F512	COMB2	4	-376.62149	9.708473206	6.573695183	0.51658541	-14.7324409	-22.7799435
F512	COMB3	0	-391.65274	-2.37717557	16.54672241	0.583960474	30.01158714	-5.96943569
F512	COMB3	2	-383.588745	-2.37717557	16.54672241	0.583960474	-3.08185506	-1.21508539

F512	COMB3	4	-375.52475	-2.37717557	16.54672241	0.583960474	-36.1752968	3.539265156
F513	D	0	-146.591629	15.22031498	1.635576129	0.663211405	2.226214886	26.62880135
F513	D	2	-138.911621	15.22031498	1.635576129	0.663211405	-1.0449369	-3.81182599
F513	D	4	-131.231613	15.22031498	1.635576129	0.663211405	-4.31608915	-34.2524529
F513	L	0	-35.2517014	6.55946207	0.196933508	0.000422177	0.13430649	11.72226238
F513	L	2	-35.2517014	6.55946207	0.196933508	0.000422177	-0.2595605	-1.3966608
F513	L	4	-35.2517014	6.55946207	0.196933508	0.000422177	-0.65342748	-14.515583
F513	EX	0	-8.76407814	9.578232765	-0.75417835	-0.0167776	-1.63382506	13.9144516
F513	EX	2	-8.76407814	9.578232765	-0.75417835	-0.0167776	-0.1254686	-5.24201202
F513	EX	4	-8.76407814	9.578232765	-0.75417835	-0.0167776	1.38288784	-24.3984756
F513	EY	0	-1.67917895	-0.00709643	15.8548193	0.042182524	30.03814697	-0.03392109
F513	EY	2	-1.67917895	-0.00709643	15.8548193	0.042182524	-1.6714859	-0.01972822
F513	EY	4	-1.67917895	-0.00709643	15.8548193	0.042182524	-33.3811188	-0.00553535
F513	COMB1	0	-232.312668	28.75951767	2.277785063	0.796529174	2.886348248	50.71018219
F513	COMB1	2	-223.096664	28.75951767	2.277785063	0.796529174	-1.66922104	-6.80884838
F513	COMB1	4	-213.880661	28.75951767	2.277785063	0.796529174	-6.22479057	-64.3278732
F513	COMB2	0	-174.625244	27.95879555	5.993082523	0.692427635	10.15083981	46.0435257
F513	COMB2	2	-166.561249	27.95879555	5.993082523	0.692427635	-1.83532333	-9.87406158
F513	COMB2	4	-158.497253	27.95879555	5.993082523	0.692427635	-13.8214874	-65.7916489
F513	COMB3	0	-169.549316	21.05725288	18.18938255	0.735511661	33.40523148	36.00018692
F513	COMB3	2	-161.485306	21.05725288	18.18938255	0.735511661	-2.97352815	-6.1143136
F513	COMB3	4	-153.42131	21.05725288	18.18938255	0.735511661	-39.3522911	-48.228817
F514	D	0	-146.160721	-14.8579597	1.647941113	-0.6778571	2.251016378	-25.9753418
F514	D	2	-138.480713	-14.8579597	1.647941113	-0.6778571	-1.04486549	3.740574121
F514	D	4	-130.80072	-14.8579597	1.647941113	-0.6778571	-4.34074736	33.45648956
F514	L	0	-36.6802521	-6.71321201	0.243438765	-0.01447061	0.21099022	-11.9526606
F514	L	2	-36.6802521	-6.71321201	0.243438765	-0.01447061	-0.27588728	1.473761439
F514	L	4	-36.6802521	-6.71321201	0.243438765	-0.01447061	-0.76276481	14.90018463
F514	EX	0	8.724370956	9.58114624	0.750075817	-0.04082292	1.625638962	14.00246239
F514	EX	2	8.724370956	9.58114624	0.750075817	-0.04082292	0.125487536	-5.15982771
F514	EX	4	8.724370956	9.58114624	0.750075817	-0.04082292	-1.37466383	-24.3221169
F514	EY	0	-1.6791786	0.007095618	15.8547945	-0.0421822	30.03810692	0.033920284
F514	EY	2	-1.6791786	0.007095618	15.8547945	-0.0421822	-1.67148292	0.019729052
F514	EY	4	-1.6791786	0.007095618	15.8547945	-0.0421822	-33.381073	0.005537817
F514	COMB1	0	-234.081268	-28.5706902	2.367031336	-0.83658147	3.038804054	-50.2946663
F514	COMB1	2	-224.865265	-28.5706902	2.367031336	-0.83658147	-1.69525826	6.846707344
F514	COMB1	4	-215.649261	-28.5706902	2.367031336	-0.83658147	-6.42932081	63.98808289
F514	COMB2	0	-156.522247	-7.79679823	7.577610016	-0.77184731	13.57456875	-16.5359631
F514	COMB2	2	-148.458252	-7.79679823	7.577610016	-0.77184731	-1.58065081	-0.94236922
F514	COMB2	4	-140.394257	-7.79679823	7.577610016	-0.77184731	-16.7358704	14.65122604
F514	COMB3	0	-164.037994	-14.6900082	18.69083023	-0.77345872	34.4821167	-26.592804
F514	COMB3	2	-155.973984	-14.6900082	18.69083023	-0.77345872	-2.89954162	2.787207603
F514	COMB3	4	-147.909988	-14.6900082	18.69083023	-0.77345872	-40.2812004	32.16722107
F515	D	0	-347.742645	7.086742878	2.039038897	-0.55437124	3.290728092	14.5052166
F515	D	2	-340.062653	7.086742878	2.039038897	-0.55437124	-0.78734946	0.331731707
F515	D	4	-332.38266	7.086742878	2.039038897	-0.55437124	-4.86542702	-13.841753
F515	L	0	-102.85157	0.484669298	0.633696079	-0.01599513	0.963400424	0.973714113
F515	L	2	-102.85157	0.484669298	0.633696079	-0.01599513	-0.30399173	0.004375598
F515	L	4	-102.85157	0.484669298	0.633696079	-0.01599513	-1.57138383	-0.9649629
F515	EX	0	2.409469843	16.71640396	-0.02639893	-0.08166954	-0.00635196	30.45337677
F515	EX	2	2.409469843	16.71640396	-0.02639893	-0.08166954	0.046445891	-2.97942734
F515	EX	4	2.409469843	16.71640396	-0.02639893	-0.08166954	0.099243753	-36.4122314
F515	EY	0	-0.93176943	-0.03086214	13.59919548	-0.02932215	25.11724854	-0.04700224
F515	EY	2	-0.93176943	-0.03086214	13.59919548	-0.02932215	-2.0811398	0.014722039
F515	EY	4	-0.93176943	-0.03086214	13.59919548	-0.02932215	-29.2795277	0.076446317
F515	COMB1	0	-581.853699	9.279561996	3.460760355	-0.69083768	5.490314484	18.96420288
F515	COMB1	2	-572.637695	9.279561996	3.460760355	-0.69083768	-1.43120611	0.405079007
F515	COMB1	4	-563.421692	9.279561996	3.460760355	-0.69083768	-8.35272598	-18.1540451
F515	COMB2	0	-395.327728	24.88550758	6.597028732	-0.68089271	11.66409492	47.04163742
F515	COMB2	2	-387.263733	24.88550758	6.597028732	-0.68089271	-1.52996182	-2.72937322
F515	COMB2	4	-379.199738	24.88550758	6.597028732	-0.68089271	-14.7240181	-52.5003815
F515	COMB3	0	-397.747406	12.82701302	16.61144447	-0.64364243	30.12984657	25.08065796
F515	COMB3	2	-389.683411	12.82701302	16.61144447	-0.64364243	-3.0930407	-0.57336485
F515	COMB3	4	-381.619415	12.82701302	16.61144447	-0.64364243	-36.3159256	-26.2273884
F516	D	0	-291.116241	19.23432732	1.751816273	-0.72041172	2.781891108	38.54328918
F516	D	2	-283.436218	19.23432732	1.751816273	-0.72041172	-0.72174108	0.074640393
F516	D	4	-275.756226	19.23432732	1.751816273	-0.72041172	-4.22537327	-38.3940086
F516	L	0	-68.5041122	6.307317257	0.579200983	-0.03160509	0.901621401	11.49710941
F516	L	2	-68.5041122	6.307317257	0.579200983	-0.03160509	-0.25678051	-1.11752391
F516	L	4	-68.5041122	6.307317257	0.579200983	-0.03160509	-1.41518247	-13.7321577
F516	EX	0	-11.2527523	9.492469788	-0.14021455	-0.0562654	-0.24055097	14.93776894
F516	EX	2	-11.2527523	9.492469788	-0.14021455	-0.0562654	0.039878074	-4.04716873
F516	EX	4	-11.2527523	9.492469788	-0.14021455	-0.0562654	0.320307106	-23.0321064
F516	EY	0	-0.82664508	-0.02851246	13.71186447	0.025508292	25.20095444	-0.03317329
F516	EY	2	-0.82664508	-0.02851246	13.71186447	0.025508292	-2.22277284	0.023851622
F516	EY	4	-0.82664508	-0.02851246	13.71186447	0.025508292	-29.6464996	0.080876537
F516	COMB1	0	-458.946045	33.17290115	3.0289011	-0.91506225	4.780863762	64.64732361
F516	COMB1	2	-449.730072	33.17290115	3.0289011	-0.91506225	-1.27693808	-1.69846976
F516	COMB1	4	-440.514069	33.17290115	3.0289011	-0.91506225	-7.33473969	-68.0442657
F516	COMB2	0	-339.157837	31.9985733	6.195970535	-0.81658751	10.89432716	59.54218674
F516	COMB2	2	-331.093842	31.9985733	6.195970535	-0.81658751	-1.49761355	-4.45495367
F516	COMB2	4	-323.029846	31.9985733	6.195970535	-0.81658751	-13.889554	-68.452095
F516	COMB3	0	-331.663422	25.1430397	16.37514496	-0.75732785	29.59022522	48.76261139
F516	COMB3	2	-323.599426	25.1430397	16.37514496	-0.75732785	-3.16006374	-1.52346146

F516	COMB3	4	-315.535431	25.1430397	16.37514496	-0.75732785	-35.9103546	-51.8095322
F517	D	0	-253.836792	-19.5976772	0.056806881	-0.73482156	0.225786984	-39.1205902
F517	D	2	-246.156799	-19.5976772	0.056806881	-0.73482156	0.112173237	0.074758582
F517	D	4	-238.476807	-19.5976772	0.056806881	-0.73482156	-0.00144052	39.27010727
F517	L	0	-34.6660576	-6.27280045	0.059384923	-0.02367838	0.139474154	-11.370738
F517	L	2	-34.6660576	-6.27280045	0.059384923	-0.02367838	0.020704327	1.174862027
F517	L	4	-34.6660576	-6.27280045	0.059384923	-0.02367838	-0.09806551	13.72046185
F517	EX	0	11.01981544	9.480596542	0.150040671	0.08498282	0.259507924	15.25659466
F517	EX	2	11.01981544	9.480596542	0.150040671	0.08498282	-0.04057335	-3.70459628
F517	EX	4	11.01981544	9.480596542	0.150040671	0.08498282	-0.34065464	-22.6657867
F517	EY	0	0.057678375	0.007999222	13.1342926	-0.01836866	23.97887039	0.004460683
F517	EY	2	0.057678375	0.007999222	13.1342926	-0.01836866	-2.28971195	-0.01153776
F517	EY	4	0.057678375	0.007999222	13.1342926	-0.01836866	-28.5582943	-0.0275362
F517	COMB1	0	-360.069855	-33.5536919	0.163184136	-0.9196713	0.494103044	-65.137886
F517	COMB1	2	-350.853851	-33.5536919	0.163184136	-0.9196713	0.167734802	1.969489574
F517	COMB1	4	-341.637848	-33.5536919	0.163184136	-0.9196713	-0.15863344	69.07686615
F517	COMB2	0	-266.02478	-12.7385559	4.370947838	-0.69685024	8.102945328	-28.8664227
F517	COMB2	2	-257.960785	-12.7385559	4.370947838	-0.69685024	-0.63894898	-3.38931346
F517	COMB2	4	-249.896774	-12.7385559	4.370947838	-0.69685024	-9.38084316	22.08779335
F517	COMB3	0	-273.916656	-19.5587063	13.91662312	-0.77153885	25.54056931	-39.8478928
F517	COMB3	2	-265.852631	-19.5587063	13.91662312	-0.77153885	-2.29267454	-0.73048443
F517	COMB3	4	-257.788635	-19.5587063	13.91662312	-0.77153885	-30.1259174	38.38692093
F518	D	0	-337.900543	-7.03231525	0.058648862	-0.60336834	0.219129369	-14.3549614
F518	D	2	-330.220551	-7.03231525	0.058648862	-0.60336834	0.101831652	-0.29033214
F518	D	4	-322.540558	-7.03231525	0.058648862	-0.60336834	-0.01546606	13.77429771
F518	L	0	-80.277298	-0.49025857	0.100954749	-0.02509627	0.228988618	-0.9419989
F518	L	2	-80.277298	-0.49025857	0.100954749	-0.02509627	0.027079137	0.038518231
F518	L	4	-80.277298	-0.49025857	0.100954749	-0.02509627	-0.17483035	1.01903522
F518	EX	0	-2.46025038	16.21731949	-0.02151384	0.041843459	-0.08539221	29.5815506
F518	EX	2	-2.46025038	16.21731949	-0.02151384	0.041843459	-0.04236452	-2.85308385
F518	EX	4	-2.46025038	16.21731949	-0.02151384	0.041843459	0.000663162	-35.2877197
F518	EY	0	0.049790021	0.018892797	12.99647808	0.014162495	23.84738731	0.031422053
F518	EY	2	0.049790021	0.018892797	12.99647808	0.014162495	-2.14556813	-0.00636354
F518	EY	4	0.049790021	0.018892797	12.99647808	0.014162495	-28.1385231	-0.04414912
F518	COMB1	0	-533.924316	-9.22319221	0.231906235	-0.7641961	0.629337013	-18.7331524
F518	COMB1	2	-524.708313	-9.22319221	0.231906235	-0.7641961	0.165524602	-0.28676939
F518	COMB1	4	-515.49231	-9.22319221	0.231906235	-0.7641961	-0.29828781	18.15961266
F518	COMB2	0	-382.613586	9.252513885	4.165005684	-0.59367293	7.725763321	15.25736332
F518	COMB2	2	-374.549591	9.252513885	4.165005684	-0.59367293	-0.60424805	-3.24766159
F518	COMB2	4	-366.485596	9.252513885	4.165005684	-0.59367293	-8.93425941	-21.7526875
F518	COMB3	0	-380.805634	-2.4100697	13.7329073	-0.6133908	25.31507492	-6.01825762
F518	COMB3	2	-372.741638	-2.4100697	13.7329073	-0.6133908	-2.150738	-1.19811857
F518	COMB3	4	-364.677643	-2.4100697	13.7329073	-0.6133908	-29.6165504	3.622020721
F519	D	0	-136.373291	15.27271938	-0.31659898	-0.73555762	-0.56997645	26.71831894
F519	D	2	-128.693298	15.27271938	-0.31659898	-0.73555762	0.063221432	-3.82711649
F519	D	4	-121.013283	15.27271938	-0.31659898	-0.73555762	0.696419299	-34.372551
F519	L	0	-32.7359734	6.585093975	0.054815996	-0.02950085	0.105813116	11.77381802
F519	L	2	-32.7359734	6.585093975	0.054815996	-0.02950085	-0.00381886	-1.39636958
F519	L	4	-32.7359734	6.585093975	0.054815996	-0.02950085	-0.11345085	-14.5665569
F519	EX	0	-8.38698196	9.204238892	-0.28720397	0.059794433	-0.6558274	13.34157276
F519	EX	2	-8.38698196	9.204238892	-0.28720397	0.059794433	-0.08141952	-5.06690359
F519	EX	4	-8.38698196	9.204238892	-0.28720397	0.059794433	0.492988348	-23.4753799
F519	EY	0	-0.06868987	0.006447485	14.43500519	0.0271248	26.98443604	0.002516705
F519	EY	2	-0.06868987	0.006447485	14.43500519	0.0271248	-1.88557029	-0.01037826
F519	EY	4	-0.06868987	0.006447485	14.43500519	0.0271248	-30.7555771	-0.02327323
F519	COMB1	0	-216.025513	28.86341286	-0.2922132	-0.92987049	-0.51467079	50.90009308
F519	COMB1	2	-206.809509	28.86341286	-0.2922132	-0.92987049	0.069755539	-6.8267312
F519	COMB1	4	-197.593506	28.86341286	-0.2922132	-0.92987049	0.654181838	-64.5535507
F519	COMB2	0	-162.205948	27.63907814	3.934608459	-0.71119672	7.25617218	45.57230759
F519	COMB2	2	-154.141953	27.63907814	3.934608459	-0.71119672	-0.61304426	-9.70584297
F519	COMB2	4	-146.077942	27.63907814	3.934608459	-0.71119672	-8.4822607	-64.9839935
F519	COMB3	0	-156.217804	21.01676559	14.75112438	-0.734312	27.5619278	35.96822739
F519	COMB3	2	-148.153809	21.01676559	14.75112438	-0.734312	-1.94031632	-6.06530046
F519	COMB3	4	-140.089798	21.01676559	14.75112438	-0.734312	-31.4425621	-48.0988274
F520	D	0	-135.932587	-14.890214	-0.3130976	0.735181451	-0.56206024	-26.0289593
F520	D	2	-128.252579	-14.890214	-0.3130976	0.735181451	0.064134859	3.751464367
F520	D	4	-120.572586	-14.890214	-0.3130976	0.735181451	0.690329969	33.53188705
F520	L	0	-34.0465164	-6.71268415	0.048546046	0.032772779	0.099394009	-11.9598055
F520	L	2	-34.0465164	-6.71268415	0.048546046	0.032772779	0.002301929	1.465562701
F520	L	4	-34.0465164	-6.71268415	0.048546046	0.032772779	-0.09479015	14.89093113
F520	EX	0	8.423428535	9.373706818	0.282320976	0.080652215	0.646996319	13.81853008
F520	EX	2	8.423428535	9.373706818	0.282320976	0.080652215	0.082354411	-4.92888117
F520	EX	4	8.423428535	9.373706818	0.282320976	0.080652215	-0.48228753	-23.6762924
F520	EY	0	-0.06868906	-0.00644767	14.43498325	-0.02712467	26.98439789	-0.00251726
F520	EY	2	-0.06868906	-0.00644767	14.43498325	-0.02712467	-1.88556635	0.010378081
F520	EY	4	-0.06868906	-0.00644767	14.43498325	-0.02712467	-30.7555294	0.02327342
F520	COMB1	0	-217.593536	-28.608551	-0.29804343	0.934654176	-0.51544189	-50.3704414
F520	COMB1	2	-208.377518	-28.608551	-0.29804343	0.934654176	0.080644913	6.846657753
F520	COMB1	4	-199.16153	-28.608551	-0.29804343	0.934654176	0.676731706	64.06375885
F520	COMB2	0	-144.757263	-8.04946423	4.525761604	0.857194722	8.610872269	-16.7963619
F520	COMB2	2	-136.693253	-8.04946423	4.525761604	0.857194722	-0.4406499	-0.69743317
F520	COMB2	4	-128.629257	-8.04946423	4.525761604	0.857194722	-9.49217224	15.40149498
F520	COMB3	0	-150.87262	-14.8032722	14.93220329	0.779188514	27.97856903	-26.7475529
F520	COMB3	2	-142.808609	-14.8032722	14.93220329	0.779188514	-1.88583636	2.858989239

F520	COMB3	4	-134.744614	-14.8032722	14.93220329	0.779188514	-31.7502384	32.4655304
F521	D	0	-338.836578	6.984920502	0.059523303	0.604351342	0.224373907	14.329319
F521	D	2	-331.156586	6.984920502	0.059523303	0.604351342	0.105327316	0.359479189
F521	D	4	-323.476563	6.984920502	0.059523303	0.604351342	-0.01371927	-13.6103601
F521	L	0	-100.215248	0.462681442	0.109299272	0.028377147	0.260335416	0.933631361
F521	L	2	-100.215248	0.462681442	0.109299272	0.028377147	0.041736882	0.008268625
F521	L	4	-100.215248	0.462681442	0.109299272	0.028377147	-0.17686164	-0.91709411
F521	EX	0	2.357347727	16.23902702	0.021206155	0.055374201	0.084110513	29.6085968
F521	EX	2	2.357347727	16.23902702	0.021206155	0.055374201	0.041698202	-2.86945653
F521	EX	4	2.357347727	16.23902702	0.021206155	0.055374201	-0.0007141	-35.3475113
F521	EY	0	0.049789779	-0.01889294	12.99647522	-0.01416083	23.84737968	-0.03142245
F521	EY	2	0.049789779	-0.01889294	12.99647522	-0.01416083	-2.14556837	0.006363422
F521	EY	4	0.049789779	-0.01889294	12.99647522	-0.01416083	-28.1385155	0.044149298
F521	COMB1	0	-566.948303	9.122195244	0.246306807	0.770624995	0.685785353	18.68899345
F521	COMB1	2	-557.7323	9.122195244	0.246306807	0.770624995	0.193171784	0.444604844
F521	COMB1	4	-548.516296	9.122195244	0.246306807	0.770624995	-0.29944175	-17.7997837
F521	COMB2	0	-384.890656	24.281353	4.212766647	0.696359336	7.916577339	45.9748764
F521	COMB2	2	-376.82666	24.281353	4.212766647	0.696359336	-0.50895566	-2.5878253
F521	COMB2	4	-368.762665	24.281353	4.212766647	0.696359336	-8.9344883	-51.1505318
F521	COMB3	0	-386.551361	12.57536697	13.74990749	0.646081686	25.38384247	24.63359261
F521	COMB3	2	-378.487366	12.57536697	13.74990749	0.646081686	-2.11597109	-0.51713943
F521	COMB3	4	-370.42337	12.57536697	13.74990749	0.646081686	-29.6157837	-25.6678715
F522	D	0	-283.189392	19.20509529	0.064741708	0.736209691	0.261428416	38.48044205
F522	D	2	-275.509399	19.20509529	0.064741708	0.736209691	0.131945014	0.070256047
F522	D	4	-267.829407	19.20509529	0.064741708	0.736209691	0.002461599	-38.3399315
F522	L	0	-66.1800232	6.354430199	0.068818301	0.027043529	0.181199521	11.55876923
F522	L	2	-66.1800232	6.354430199	0.068818301	0.027043529	0.043562926	-1.15008986
F522	L	4	-66.1800232	6.354430199	0.068818301	0.027043529	-0.09407366	-13.8589487
F522	EX	0	-10.9524517	9.255910873	-0.1449095	0.096598782	-0.24992809	14.66309643
F522	EX	2	-10.9524517	9.255910873	-0.1449095	0.096598782	0.039890897	-3.84872413
F522	EX	4	-10.9524517	9.255910873	-0.1449095	0.096598782	0.329709858	-22.3605442
F522	EY	0	0.057678591	-0.0079994	13.13429642	0.018368777	23.97887611	-0.00446127
F522	EY	2	0.057678591	-0.0079994	13.13429642	0.018368777	-2.28971314	0.011537538
F522	EY	4	0.057678591	-0.0079994	13.13429642	0.018368777	-28.5583019	0.027536342
F522	COMB1	0	-445.715332	33.21320343	0.187799335	0.926721275	0.603633344	64.67056274
F522	COMB1	2	-436.499329	33.21320343	0.187799335	0.926721275	0.22803469	-1.75583661
F522	COMB1	4	-427.283325	33.21320343	0.187799335	0.926721275	-0.14756393	-68.1822357
F522	COMB2	0	-329.513214	31.7443428	4.076978683	0.887304783	7.62624836	59.22037506
F522	COMB2	2	-321.449219	31.7443428	4.076978683	0.887304783	-0.52770799	-4.26830435
F522	COMB2	4	-313.385193	31.7443428	4.076978683	0.887304783	-8.68166447	-67.7569809
F522	COMB3	0	-321.585052	25.07420731	13.83502102	0.831254721	25.43067169	48.65966415
F522	COMB3	2	-313.521057	25.07420731	13.83502102	0.831254721	-2.23936844	-1.48874319
F522	COMB3	4	-305.457062	25.07420731	13.83502102	0.831254721	-29.9094067	-51.6371536
F523	D	0	-252.270355	-13.8305454	0.022665825	-0.60960656	0.036685862	-27.8245296
F523	D	2	-244.590363	-13.8305454	0.022665825	-0.60960656	-0.00864579	-0.16344148
F523	D	4	-236.910339	-13.8305454	0.022665825	-0.60960656	-0.05397743	27.49764633
F523	L	0	-34.7623901	-5.97824955	0.039837249	-0.00166817	0.077079795	-10.6447554
F523	L	2	-34.7623901	-5.97824955	0.039837249	-0.00166817	-0.0025947	1.311743259
F523	L	4	-34.7623901	-5.97824955	0.039837249	-0.00166817	-0.0822692	13.26824188
F523	EX	0	10.9494791	8.928606987	0.154696792	0.053687524	0.272452712	13.70331669
F523	EX	2	10.9494791	8.928606987	0.154696792	0.053687524	-0.03694086	-4.15389633
F523	EX	4	10.9494791	8.928606987	0.154696792	0.053687524	-0.34633446	-22.0111084
F523	EY	0	0.034586731	-0.00140502	13.02515888	-0.0223091	23.8009758	-0.0031402
F523	EY	2	0.034586731	-0.00140502	13.02515888	-0.0223091	-2.24933815	-0.00033015
F523	EY	4	0.034586731	-0.00140502	13.02515888	-0.0223091	-28.2996521	0.0024799
F523	COMB1	0	-358.344238	-26.1618538	0.09093859	-0.73419696	0.167350709	-50.4210434
F523	COMB1	2	-349.128265	-26.1618538	0.09093859	-0.73419696	-0.01452647	1.902659416
F523	COMB1	4	-339.912231	-26.1618538	0.09093859	-0.73419696	-0.19640364	54.22636414
F523	COMB2	0	-264.490417	-7.16455555	4.299384117	-0.5920732	7.842096329	-18.3869114
F523	COMB2	2	-256.426422	-7.16455555	4.299384117	-0.5920732	-0.75667065	-4.05780077
F523	COMB2	4	-248.362411	-7.16455555	4.299384117	-0.5920732	-9.35543728	10.2713089
F523	COMB3	0	-272.348633	-13.5941858	13.76149368	-0.64712536	25.13964844	-28.2556076
F523	COMB3	2	-264.284637	-13.5941858	13.76149368	-0.64712536	-2.38333678	-1.06723833
F523	COMB3	4	-256.220612	-13.5941858	13.76149368	-0.64712536	-29.9063206	26.12112999
F524	D	0	-332.125427	2.011986256	0.202969804	-0.50316316	0.394652843	3.003343821
F524	D	2	-324.445404	2.011986256	0.202969804	-0.50316316	-0.01128673	-1.02062809
F524	D	4	-316.765411	2.011986256	0.202969804	-0.50316316	-0.41722628	-5.04460049
F524	L	0	-78.4999161	0.182895392	0.112809263	-0.00574898	0.225902289	0.35889411
F524	L	2	-78.4999161	0.182895392	0.112809263	-0.00574898	0.00028379	-0.00689666
F524	L	4	-78.4999161	0.182895392	0.112809263	-0.00574898	-0.2253347	-0.37268746
F524	EX	0	-3.5895853	15.13626766	-0.04267363	0.016075419	-0.13610764	27.09819031
F524	EX	2	-3.5895853	15.13626766	-0.04267363	0.016075419	-0.05076039	-3.17434359
F524	EX	4	-3.5895853	15.13626766	-0.04267363	0.016075419	0.034586862	-33.4468765
F524	EY	0	0.023301402	-0.00201704	12.88487053	-0.00373524	23.6619606	-0.00343218
F524	EY	2	0.023301402	-0.00201704	12.88487053	-0.00373524	-2.10777783	0.000601903
F524	EY	4	0.023301402	-0.00201704	12.88487053	-0.00373524	-27.8775158	0.004635983
F524	COMB1	0	-524.150391	2.70701623	0.424058586	-0.61299413	0.835027099	4.17824316
F524	COMB1	2	-514.934387	2.70701623	0.424058586	-0.61299413	-0.01309001	-1.23578846
F524	COMB1	4	-505.718384	2.70701623	0.424058586	-0.61299413	-0.86120707	-6.64982033
F524	COMB2	0	-377.167053	17.8355999	4.26322031	-0.51467079	7.798191071	31.31210899
F524	COMB2	2	-369.103027	17.8355999	4.26322031	-0.51467079	-0.72824866	-4.35908794
F524	COMB2	4	-361.039032	17.8355999	4.26322031	-0.51467079	-9.25468826	-40.0302849
F524	COMB3	0	-374.565399	6.936004162	13.76432514	-0.52899045	25.28772926	11.79888916
F524	COMB3	2	-366.501404	6.936004162	13.76432514	-0.52899045	-2.24091768	-2.07311821

F524	COMB3	4	-358.437408	6.936004162	13.76432514	-0.52899045	-29.7695656	-15.9451256
F525	D	0	-225.744659	4.618923187	-10.0059338	-0.54485196	-18.9643993	8.532435417
F525	D	2	-218.064636	4.618923187	-10.0059338	-0.54485196	1.047467589	-0.70540977
F525	D	4	-210.384644	4.618923187	-10.0059338	-0.54485196	21.0593338	-9.94325447
F525	L	0	-61.2128143	1.687813401	-3.46683526	-0.00020827	-6.56006527	3.095988512
F525	L	2	-61.2128143	1.687813401	-3.46683526	-0.00020827	0.373604387	-0.27963781
F525	L	4	-61.2128143	1.687813401	-3.46683526	-0.00020827	7.307274342	-3.65526414
F525	EX	0	-1.05644703	14.95583725	-0.1114294	0.059721891	-0.26297247	26.08409309
F525	EX	2	-1.05644703	14.95583725	-0.1114294	0.059721891	-0.04011368	-3.82757854
F525	EX	4	-1.05644703	14.95583725	-0.1114294	0.059721891	0.182745099	-33.7392502
F525	EY	0	-0.11904572	-0.00225545	14.01210403	0.008015708	26.12546921	-0.00409094
F525	EY	2	-0.11904572	-0.00225545	14.01210403	0.008015708	-1.89873564	0.000419961
F525	EY	4	-0.11904572	-0.00225545	14.01210403	0.008015708	-29.9229431	0.004930859
F525	COMB1	0	-368.834076	8.243208885	-17.5540581	-0.65415555	-33.2533836	15.19250393
F525	COMB1	2	-359.618073	8.243208885	-17.5540581	-0.65415555	1.854728103	-1.29391217
F525	COMB1	4	-350.402069	8.243208885	-17.5540581	-0.65415555	36.96283722	-17.7803288
F525	COMB2	0	-257.444855	20.86011124	-7.2998004	-0.50782305	-14.0216932	36.93004227
F525	COMB2	2	-249.380829	20.86011124	-7.2998004	-0.50782305	0.577906907	-4.79017782
F525	COMB2	4	-241.316833	20.86011124	-7.2998004	-0.50782305	15.17750645	-46.5103951
F525	COMB3	0	-256.771698	10.09025097	3.079325438	-0.54493129	5.369867802	18.14648819
F525	COMB3	2	-248.707687	10.09025097	3.079325438	-0.54493129	-0.78878194	-2.03401256
F525	COMB3	4	-240.643692	10.09025097	3.079325438	-0.54493129	-6.94743299	-22.2145119
F526	D	0	-225.448715	-4.14092255	-10.0028639	0.547105968	-18.9585514	-7.63446474
F526	D	2	-217.768723	-4.14092255	-10.0028639	0.547105968	1.047174335	0.647379935
F526	D	4	-210.08873	-4.14092255	-10.0028639	0.547105968	21.05290031	8.929224014
F526	L	0	-62.4881401	-1.61332071	-3.37571239	0.004761852	-6.38597059	-2.92859149
F526	L	2	-62.4881401	-1.61332071	-3.37571239	0.004761852	0.36545366	0.298049569
F526	L	4	-62.4881401	-1.61332071	-3.37571239	0.004761852	7.116877556	3.524690866
F526	EX	0	0.974525988	14.87934303	0.105821468	0.015143033	0.252780169	25.95331383
F526	EX	2	0.974525988	14.87934303	0.105821468	0.015143033	0.041137241	-3.80536866
F526	EX	4	0.974525988	14.87934303	0.105821468	0.015143033	-0.17050569	-33.5640526
F526	EY	0	-0.11904543	0.002255765	14.01208401	-0.00801752	26.12543297	0.004091093
F526	EY	2	-0.11904543	0.002255765	14.01208401	-0.00801752	-1.89873183	-0.00042044
F526	EY	4	-0.11904543	0.002255765	14.01208401	-0.00801752	-29.9228973	-0.00493196
F526	COMB1	0	-370.519501	-7.55042028	-17.4045773	0.664146066	-32.9678154	-13.8471041
F526	COMB1	2	-361.303497	-7.55042028	-17.4045773	0.664146066	1.841335058	1.253735185
F526	COMB1	4	-352.087494	-7.55042028	-17.4045773	0.664146066	36.65048218	16.3545742
F526	COMB2	0	-255.433792	10.54466534	-7.04302454	0.589108765	-13.4269199	17.92427444
F526	COMB2	2	-247.369781	10.54466534	-7.04302454	0.589108765	0.659127533	-3.16505456
F526	COMB2	4	-239.305786	10.54466534	-7.04302454	0.589108765	14.74517536	-24.2543831
F526	COMB3	0	-256.222931	-0.16680324	3.179665804	0.572312891	5.593271732	-0.75910497
F526	COMB3	2	-248.158951	-0.16680324	3.179665804	0.572312891	-0.76605916	-0.42549807
F526	COMB3	4	-240.094955	-0.16680324	3.179665804	0.572312891	-7.12539053	-0.09189159
F527	D	0	-333.055389	-2.0902853	0.204320505	0.504795432	0.397687733	-3.09249854
F527	D	2	-325.375397	-2.0902853	0.204320505	0.504795432	-0.01095325	1.088071465
F527	D	4	-317.695404	-2.0902853	0.204320505	0.504795432	-0.41959423	5.268641949
F527	L	0	-98.3787842	-0.29532564	0.123199008	0.009818469	0.245504618	-0.52661711
F527	L	2	-98.3787842	-0.29532564	0.123199008	0.009818469	-0.00089337	0.064034082
F527	L	4	-98.3787842	-0.29532564	0.123199008	0.009818469	-0.24729137	0.654685318
F527	EX	0	3.53075552	14.95554256	0.040554214	-0.01120321	0.130620152	26.73042107
F527	EX	2	3.53075552	14.95554256	0.040554214	-0.01120321	0.049511727	-3.18066335
F527	EX	4	3.53075552	14.95554256	0.040554214	-0.01120321	-0.0315967	-33.0917473
F527	EY	0	0.023301169	0.002017477	12.88486767	0.003737001	23.66195297	0.003432581
F527	EY	2	0.023301169	0.002017477	12.88486767	0.003737001	-2.10777783	-0.00060237
F527	EY	4	0.023301169	0.002017477	12.88486767	0.003737001	-27.8775082	-0.00463732
F527	COMB1	0	-557.07251	-2.98086333	0.442303002	0.621464014	0.870032668	-4.55358553
F527	COMB1	2	-547.856506	-2.98086333	0.442303002	0.621464014	-0.01457329	1.408140302
F527	COMB1	4	-538.640564	-2.98086333	0.442303002	0.621464014	-0.89917928	7.369866371
F527	COMB2	0	-377.035797	13.19179535	4.354051113	0.522709846	8.083613396	24.25405884
F527	COMB2	2	-368.971802	13.19179535	4.354051113	0.522709846	-0.62448776	-2.12953067
F527	COMB2	4	-360.907806	13.19179535	4.354051113	0.522709846	-9.3325882	-28.5131207
F527	COMB3	0	-379.560822	2.425287247	13.79522991	0.533522844	25.38110352	5.010678768
F527	COMB3	2	-371.496826	2.425287247	13.79522991	0.533522844	-2.20935297	0.160104319
F527	COMB3	4	-363.432831	2.425287247	13.79522991	0.533522844	-29.7998085	-4.69047022
F528	D	0	-281.714752	13.42207241	0.022032944	0.611995578	0.035633426	27.15395164
F528	D	2	-274.03476	13.42207241	0.022032944	0.611995578	-0.00843246	0.309808016
F528	D	4	-266.354767	13.42207241	0.022032944	0.611995578	-0.05249834	-26.5343342
F528	L	0	-66.3861694	6.02359724	0.04007525	0.006977082	0.07764066	10.75842476
F528	L	2	-66.3861694	6.02359724	0.04007525	0.006977082	-0.00250983	-1.28876793
F528	L	4	-66.3861694	6.02359724	0.04007525	0.006977082	-0.08266031	-13.3359604
F528	EX	0	-10.8088799	8.636267662	-0.14711522	0.008479537	-0.25724962	13.22542763
F528	EX	2	-10.8088799	8.636267662	-0.14711522	0.008479537	0.036980797	-4.04710579
F528	EX	4	-10.8088799	8.636267662	-0.14711522	0.008479537	0.331211209	-21.3196392
F528	EY	0	0.034586743	0.001405121	13.0251627	0.022309322	23.80098343	0.0031397
F528	EY	2	0.034586743	0.001405121	13.0251627	0.022309322	-2.24933934	0.000329459
F528	EY	4	0.034586743	0.001405121	13.0251627	0.022309322	-28.2996616	-0.00248078
F528	COMB1	0	-444.275574	25.74424171	0.09055993	0.745558023	0.166985169	49.79822159
F528	COMB1	2	-435.05957	25.74424171	0.09055993	0.745558023	-0.01413467	-1.69025898
F528	COMB1	4	-425.843567	25.74424171	0.09055993	0.745558023	-0.19525452	-53.1787376
F528	COMB2	0	-327.888428	24.92958832	3.986420393	0.660596907	7.292928219	45.58985901
F528	COMB2	2	-319.824432	24.92958832	3.986420393	0.660596907	-0.67991143	-4.26931429
F528	COMB2	4	-311.760437	24.92958832	3.986420393	0.660596907	-8.65275097	-54.1284866
F528	COMB3	0	-320.080597	18.71250916	13.66583824	0.67088902	24.97187042	36.06985855
F528	COMB3	2	-312.016602	18.71250916	13.66583824	0.67088902	-2.35980201	-1.35515583

F528	COMB3	4	-303.952606	18.71250916	13.66583824	0.67088902	-29.691473	-38.7801704
F529	D	0	-251.148071	-13.92698	-0.0532385	0.00134124	-0.229073	-27.9235134
F529	D	2	-243.468079	-13.92698	-0.0532385	0.00134124	-0.12259602	-0.06955448
F529	D	4	-235.788071	-13.92698	-0.0532385	0.00134124	-0.01611903	27.78440475
F529	L	0	-34.6673698	-5.98197317	0.043952566	-0.00022983	0.05901495	-10.6480322
F529	L	2	-34.6673698	-5.98197317	0.043952566	-0.00022983	-0.02889017	1.315912247
F529	L	4	-34.6673698	-5.98197317	0.043952566	-0.00022983	-0.11679529	13.27985668
F529	EX	0	10.88607121	8.836647987	0.150226131	0.010722096	0.25944975	13.54798126
F529	EX	2	10.88607121	8.836647987	0.150226131	0.010722096	-0.04100249	-4.12531281
F529	EX	4	10.88607121	8.836647987	0.150226131	0.010722096	-0.34145474	-21.7986069
F529	EY	0	0.008032488	6.69428E-05	12.92702293	-0.02264534	23.61293221	-6.8512E-05
F529	EY	2	0.008032488	6.69428E-05	12.92702293	-0.02264534	-2.24110913	-0.0002024
F529	EY	4	0.008032488	6.69428E-05	12.92702293	-0.02264534	-28.0951519	-0.00033628
F529	COMB1	0	-356.845459	-26.2835331	0.006437908	0.001241759	-0.18046369	-50.5450668
F529	COMB1	2	-347.629486	-26.2835331	0.006437908	0.001241759	-0.1933395	2.021994352
F529	COMB1	4	-338.413483	-26.2835331	0.006437908	0.001241759	-0.20621531	54.58905411
F529	COMB2	0	-263.356079	-7.3616991	4.185441017	0.005299991	7.484667301	-18.65168
F529	COMB2	2	-255.292084	-7.3616991	4.185441017	0.005299991	-0.88621318	-3.9282825
F529	COMB2	4	-247.228088	-7.3616991	4.185441017	0.005299991	-9.25709438	10.79511452
F529	COMB3	0	-271.188141	-13.7240362	13.57863998	-0.01906425	24.6533699	-28.4062767
F529	COMB3	2	-263.124146	-13.7240362	13.57863998	-0.01906425	-2.50390649	-0.95820594
F529	COMB3	4	-255.06015	-13.7240362	13.57863998	-0.01906425	-29.6611824	26.48986435
F530	D	0	-329.208038	2.242412567	-0.02946291	-0.01220753	-0.24109191	3.461889505
F530	D	2	-321.528046	2.242412567	-0.02946291	-0.01220753	-0.1821661	-1.02293515
F530	D	4	-313.848022	2.242412567	-0.02946291	-0.01220753	-0.12324028	-5.50775957
F530	L	0	-77.5056839	0.226370707	0.041050497	-0.00531735	0.024618635	0.428725481
F530	L	2	-77.5056839	0.226370707	0.041050497	-0.00531735	-0.05748235	-0.0240159
F530	L	4	-77.5056839	0.226370707	0.041050497	-0.00531735	-0.13958333	-0.47675726
F530	EX	0	-3.75005507	14.9528141	0.022224363	-0.01077832	0.006377817	26.74199295
F530	EX	2	-3.75005507	14.9528141	0.022224363	-0.01077832	-0.03807091	-3.16363168
F530	EX	4	-3.75005507	14.9528141	0.022224363	-0.01077832	-0.08251962	-33.0692558
F530	EY	0	-0.00855862	-0.00126176	12.77878857	-0.01427611	23.45929146	-0.00192309
F530	EY	2	-0.00855862	-0.00126176	12.77878857	-0.01427611	-2.09828472	0.000600426
F530	EY	4	-0.00855862	-0.00126176	12.77878857	-0.01427611	-27.6558609	0.003123943
F530	COMB1	0	-519.058716	3.053088188	0.030325307	-0.0231568	-0.24992047	4.840228081
F530	COMB1	2	-509.842743	3.053088188	0.030325307	-0.0231568	-0.31057107	-1.2659477
F530	COMB1	4	-500.62674	3.053088188	0.030325307	-0.0231568	-0.37122169	-7.37212324
F530	COMB2	0	-373.966736	17.90160561	4.030315399	-0.03014541	7.150886059	31.4473896
F530	COMB2	2	-365.90274	17.90160561	4.030315399	-0.03014541	-0.90974438	-4.35581684
F530	COMB2	4	-357.838745	17.90160561	4.030315399	-0.03014541	-8.97037506	-40.1590233
F530	COMB3	0	-371.27298	7.134651184	13.40672398	-0.03287796	24.38887215	12.19174099
F530	COMB3	2	-363.208984	7.134651184	13.40672398	-0.03287796	-2.42457247	-2.07756042
F530	COMB3	4	-355.144989	7.134651184	13.40672398	-0.03287796	-29.2380199	-16.3468628
F531	D	0	-265.372162	0.492139369	0.480547637	-0.02454575	0.451190382	0.984414935
F531	D	2	-257.692169	0.492139369	0.480547637	-0.02454575	-0.5099048	0.000136344
F531	D	4	-250.012177	0.492139369	0.480547637	-0.02454575	-1.47099996	-0.98414236
F531	L	0	-75.5981064	0.300899297	0.226983234	-0.00323339	0.291456223	0.563647032
F531	L	2	-75.5981064	0.300899297	0.226983234	-0.00323339	-0.16251023	-0.03815154
F531	L	4	-75.5981064	0.300899297	0.226983234	-0.00323339	-0.61647666	-0.6399501
F531	EX	0	-0.48358238	15.05229568	-0.37300441	0.024596017	-0.79924291	26.35995293
F531	EX	2	-0.48358238	15.05229568	-0.37300441	0.024596017	-0.05323416	-3.74463463
F531	EX	4	-0.48358238	15.05229568	-0.37300441	0.024596017	0.692774594	-33.8492241
F531	EY	0	-0.18330291	-0.00154991	13.65404224	-0.0027593	25.38733101	-0.00222147
F531	EY	2	-0.18330291	-0.00154991	13.65404224	-0.0027593	-1.92075062	0.00087835
F531	EY	4	-0.18330291	-0.00154991	13.65404224	-0.0027593	-29.2288342	0.003978165
F531	COMB1	0	-439.403564	1.072006106	0.939830363	-0.03462832	1.007758379	2.083133221
F531	COMB1	2	-430.187561	1.072006106	0.939830363	-0.03462832	-0.87190211	-0.06087885
F531	COMB1	4	-420.971588	1.072006106	0.939830363	-0.03462832	-2.7515626	-2.20489097
F531	COMB2	0	-303.012421	16.19016838	4.491038322	-0.00220385	7.735351563	28.49303627
F531	COMB2	2	-294.948425	16.19016838	4.491038322	-0.00220385	-1.24672461	-3.88729477
F531	COMB2	4	-286.88443	16.19016838	4.491038322	-0.00220385	-10.2288008	-36.2676277
F531	COMB3	0	-302.798981	5.35137558	14.79532242	-0.02194107	26.97049522	9.512237549
F531	COMB3	2	-294.734985	5.35137558	14.79532242	-0.02194107	-2.62014771	-1.19051218
F531	COMB3	4	-286.67099	5.35137558	14.79532242	-0.02194107	-32.2107925	-11.8932619
F532	D	0	-265.078583	-0.02049054	0.486778319	0.026599495	0.463742435	-0.09688606
F532	D	2	-257.39859	-0.02049054	0.486778319	0.026599495	-0.50981408	-0.05590499
F532	D	4	-249.718582	-0.02049054	0.486778319	0.026599495	-1.48337066	-0.01492391
F532	L	0	-76.3773575	-0.2155205	0.227380157	0.004764498	0.290624171	-0.37855333
F532	L	2	-76.3773575	-0.2155205	0.227380157	0.004764498	-0.16413611	0.052487601
F532	L	4	-76.3773575	-0.2155205	0.227380157	0.004764498	-0.61889637	0.483528525
F532	EX	0	0.397364706	14.97749901	0.368192226	0.02360639	0.79001081	26.22647285
F532	EX	2	0.397364706	14.97749901	0.368192226	0.02360639	0.053626437	-3.72852302
F532	EX	4	0.397364706	14.97749901	0.368192226	0.02360639	-0.68275797	-33.6835175
F532	EY	0	-0.18330257	0.001550187	13.65402317	0.002757914	25.38729668	0.002221932
F532	EY	2	-0.18330257	0.001550187	13.65402317	0.002757914	-1.9207468	-0.00087844
F532	EY	4	-0.18330257	0.001550187	13.65402317	0.002757914	-29.2287903	-0.00397882
F532	COMB1	0	-440.298065	-0.36942145	0.947942257	0.039542593	1.02148962	-0.72194862
F532	COMB1	2	-431.082062	-0.36942145	0.947942257	0.039542593	-0.87439471	0.016894173
F532	COMB1	4	-421.866058	-0.36942145	0.947942257	0.039542593	-2.77027893	0.755736947
F532	COMB2	0	-302.037842	15.41279602	5.264838219	0.054731645	9.393136024	26.92412567
F532	COMB2	2	-293.973846	15.41279602	5.264838219	0.054731645	-1.13653958	-3.9014647
F532	COMB2	4	-285.909851	15.41279602	5.264838219	0.054731645	-11.6662149	-34.7270546
F532	COMB3	0	-302.458679	4.630136013	15.03544712	0.03976211	27.48399162	8.042696953
F532	COMB3	2	-294.394684	4.630136013	15.03544712	0.03976211	-2.58689952	-1.21757376

F532	COMB3	4	-286.330688	4.630136013	15.03544712	0.03976211	-32.6577911	-10.4778452
F533	D	0	-330.121796	-2.32934928	-0.02839359	0.012307853	-0.24211152	-3.56798363
F533	D	2	-322.441803	-2.32934928	-0.02839359	0.012307853	-0.18532434	1.090714455
F533	D	4	-314.76181	-2.32934928	-0.02839359	0.012307853	-0.12853718	5.749412537
F533	L	0	-97.2644806	-0.36832771	0.035997558	0.005734113	7.71263E-06	-0.65178323
F533	L	2	-97.2644806	-0.36832771	0.035997558	0.005734113	-0.07198739	0.084872097
F533	L	4	-97.2644806	-0.36832771	0.035997558	0.005734113	-0.1439825	0.821527421
F533	EX	0	3.690694809	14.77584934	-0.02216144	-0.00976715	-0.00587076	26.37547874
F533	EX	2	3.690694809	14.77584934	-0.02216144	-0.00976715	0.038452122	-3.1762166
F533	EX	4	3.690694809	14.77584934	-0.02216144	-0.00976715	0.082774997	-32.7279129
F533	EY	0	-0.00855853	0.001262047	12.77878571	0.01427801	23.45928383	0.001923591
F533	EY	2	-0.00855853	0.001262047	12.77878571	0.01427801	-2.0982852	-0.0006005
F533	EY	4	-0.00855853	0.001262047	12.77878571	0.01427801	-27.6558552	-0.0031246
F533	COMB1	0	-551.769348	-3.38454342	0.023523781	0.023944004	-0.29052147	-5.32443333
F533	COMB1	2	-542.553345	-3.38454342	0.023523781	0.023944004	-0.33756906	1.444652796
F533	COMB1	4	-533.337341	-3.38454342	0.023523781	0.023944004	-0.38461661	8.213739395
F533	COMB2	0	-373.449036	12.73156166	3.983906507	0.009118067	7.129383564	23.34753227
F533	COMB2	2	-365.38501	12.73156166	3.983906507	0.009118067	-0.83842844	-2.11558843
F533	COMB2	4	-357.321014	12.73156166	3.983906507	0.009118067	-8.80624104	-27.5787106
F533	COMB3	0	-376.11261	2.093877554	13.39227009	0.02664475	24.37618446	4.358601093
F533	COMB3	2	-368.048615	2.093877554	13.39227009	0.02664475	-2.40835357	0.170846194
F533	COMB3	4	-359.984619	2.093877554	13.39227009	0.02664475	-29.1928921	-4.01690912
F534	D	0	-280.489655	13.51403618	-0.06270301	-0.00069278	-0.26728702	27.24472046
F534	D	2	-272.809662	13.51403618	-0.06270301	-0.00069278	-0.14188102	0.216651738
F534	D	4	-265.129669	13.51403618	-0.06270301	-0.00069278	-0.01647501	-26.8114166
F534	L	0	-66.1748657	6.018143177	0.035526872	0.002115867	0.019435864	10.74412918
F534	L	2	-66.1748657	6.018143177	0.035526872	0.002115867	-0.05161787	-1.29215586
F534	L	4	-66.1748657	6.018143177	0.035526872	0.002115867	-0.12267162	-13.3284416
F534	EX	0	-10.74086	8.552886009	-0.14527468	0.011172702	-0.25073397	13.07858181
F534	EX	2	-10.74086	8.552886009	-0.14527468	0.011172702	0.039815351	-4.02718782
F534	EX	4	-10.74086	8.552886009	-0.14527468	0.011172702	0.330364674	-21.1329575
F534	EY	0	0.008032347	-6.6782E-05	12.92702579	0.022645846	23.61293983	6.87157E-05
F534	EY	2	0.008032347	-6.6782E-05	12.92702579	0.022645846	-2.24111009	0.00020228
F534	EY	4	0.008032347	-6.6782E-05	12.92702579	0.022645846	-28.0951595	0.000335844
F534	COMB1	0	-442.467377	25.84587288	-0.01840062	0.002554053	-0.28964704	49.88427353
F534	COMB1	2	-433.251373	25.84587288	-0.01840062	0.002554053	-0.25284582	-1.80746722
F534	COMB1	4	-424.0354	25.84587288	-0.01840062	0.002554053	-0.21604459	-53.4992065
F534	COMB2	0	-326.47348	24.93766785	3.86700654	0.018636269	6.904037476	45.52771378
F534	COMB2	2	-318.409485	24.93766785	3.86700654	0.018636269	-0.82997555	-4.34762049
F534	COMB2	4	-310.34549	24.93766785	3.86700654	0.018636269	-8.56398869	-54.22295
F534	COMB3	0	-318.734161	18.77954292	13.4729681	0.02723662	24.44007683	36.11118317
F534	COMB3	2	-310.670166	18.77954292	13.4729681	0.02723662	-2.50585866	-1.44789648
F534	COMB3	4	-302.606171	18.77954292	13.4729681	0.02723662	-29.4517937	-39.0069771
F535	D	0	-257.938202	-13.8824816	-1.55934858	0.003100933	-2.51978421	-27.9213943
F535	D	2	-250.258224	-13.8824816	-1.55934858	0.003100933	0.598912835	-0.15643384
F535	D	4	-242.578217	-13.8824816	-1.55934858	0.003100933	3.717609882	27.60852623
F535	L	0	-36.0018845	-5.98549318	-0.27933285	0.001989746	-0.42564914	-10.6598158
F535	L	2	-36.0018845	-5.98549318	-0.27933285	0.001989746	0.133016512	1.311168671
F535	L	4	-36.0018845	-5.98549318	-0.27933285	0.001989746	0.69168216	13.28215313
F535	EX	0	10.92940044	8.821084976	0.18067494	-0.02155776	0.323975027	13.53376102
F535	EX	2	10.92940044	8.821084976	0.18067494	-0.02155776	-0.03737482	-4.10840797
F535	EX	4	10.92940044	8.821084976	0.18067494	-0.02155776	-0.39872468	-21.7505779
F535	EY	0	0.973621845	-9.6543E-05	13.27367687	-0.02224859	24.4112854	-0.00148259
F535	EY	2	0.973621845	-9.6543E-05	13.27367687	-0.02224859	-2.13606596	-0.00128951
F535	EY	4	0.973621845	-9.6543E-05	13.27367687	-0.02224859	-28.6834183	-0.00109642
F535	COMB1	0	-367.128876	-26.2357655	-2.318151	0.006904712	-3.70477962	-50.5613785
F535	COMB1	2	-357.912872	-26.2357655	-2.318151	0.006904712	0.931521773	1.910149217
F535	COMB1	4	-348.696869	-26.2357655	-2.318151	0.006904712	5.56782341	54.38167572
F535	COMB2	0	-270.557098	-7.33224249	2.642900944	-0.02543784	5.245016098	-18.6683292
F535	COMB2	2	-262.493103	-7.33224249	2.642900944	-0.02543784	-0.04078506	-4.00384617
F535	COMB2	4	-254.429108	-7.33224249	2.642900944	-0.02543784	-5.32658625	10.66063595
F535	COMB3	0	-277.710663	-13.6834946	12.26896763	-0.02626896	22.95404816	-28.4137268
F535	COMB3	2	-269.646667	-13.6834946	12.26896763	-0.02626896	-1.58388364	-1.04673994
F535	COMB3	4	-261.582672	-13.6834946	12.26896763	-0.02626896	-26.1218166	26.32024574
F536	D	0	-337.57608	2.197776794	-2.14715505	-0.01599044	-3.51588941	3.414505005
F536	D	2	-329.896088	2.197776794	-2.14715505	-0.01599044	0.778420329	-0.98104793
F536	D	4	-322.216064	2.197776794	-2.14715505	-0.01599044	5.072729588	-5.37660122
F536	L	0	-79.8863144	0.208483696	-0.59233862	-0.00374318	-0.92819512	0.397450805
F536	L	2	-79.8863144	0.208483696	-0.59233862	-0.00374318	0.256481946	-0.01951656
F536	L	4	-79.8863144	0.208483696	-0.59233862	-0.00374318	1.441159129	-0.43648392
F536	EX	0	-3.76768589	14.92669964	0.017856902	-0.03397637	-0.00039194	26.70240211
F536	EX	2	-3.76768589	14.92669964	0.017856902	-0.03397637	-0.03610574	-3.15099454
F536	EX	4	-3.76768589	14.92669964	0.017856902	-0.03397637	-0.07181954	-33.0043907
F536	EY	0	1.020482302	-0.00013616	13.11973	-0.02006158	24.23015404	-0.00235296
F536	EY	2	1.020482302	-0.00013616	13.11973	-0.02006158	-2.00930309	-0.00208063
F536	EY	4	1.020482302	-0.00013616	13.11973	-0.02006158	-28.2487602	-0.0018083
F536	COMB1	0	-532.909363	2.970906019	-3.52432775	-0.02517761	-5.70417929	4.733327389
F536	COMB1	2	-523.69342	2.970906019	-3.52432775	-0.02517761	1.344475508	-1.20848405
F536	COMB1	4	-514.477417	2.970906019	-3.52432775	-0.02517761	8.393130302	-7.15029573
F536	COMB2	0	-383.197174	17.82242966	1.710097432	-0.05945399	3.64802742	31.34667206
F536	COMB2	2	-375.133179	17.82242966	1.710097432	-0.05945399	0.227833256	-4.29818296
F536	COMB2	4	-367.069183	17.82242966	1.710097432	-0.05945399	-3.19236112	-39.9430351
F536	COMB3	0	-379.734375	7.07510519	11.34024239	-0.04973627	21.45747185	12.1192131
F536	COMB3	2	-371.67038	7.07510519	11.34024239	-0.04973627	-1.22300828	-2.03099608

F536	COMB3	4	-363.606384	7.07510519	11.34024239	-0.04973627	-23.9034901	-16.1812057
F537	D	0	-274.227356	0.436175138	-3.27852798	-0.01469853	-5.25969458	0.886587262
F537	D	2	-266.547333	0.436175138	-3.27852798	-0.01469853	1.297361255	0.014237053
F537	D	4	-258.86734	0.436175138	-3.27852798	-0.01469853	7.854416847	-0.85811317
F537	L	0	-78.0144119	0.274010718	-0.89467978	-0.00144054	-1.39371502	0.519408703
F537	L	2	-78.0144119	0.274010718	-0.89467978	-0.00144054	0.395644426	-0.02861263
F537	L	4	-78.0144119	0.274010718	-0.89467978	-0.00144054	2.185003757	-0.57663399
F537	EX	0	-0.61646515	15.03600597	-0.32239309	-0.00184416	-0.68698597	26.34007072
F537	EX	2	-0.61646515	15.03600597	-0.32239309	-0.00184416	-0.04219982	-3.7319386
F537	EX	4	-0.61646515	15.03600597	-0.32239309	-0.00184416	0.602586329	-33.8039474
F537	EY	0	1.17414844	-0.00021504	13.89945412	-0.00947132	25.86512184	-0.00157397
F537	EY	2	1.17414844	-0.00021504	13.89945412	-0.00947132	-1.93378425	-0.00114389
F537	EY	4	1.17414844	-0.00021504	13.89945412	-0.00947132	-29.7326908	-0.00071381
F537	COMB1	0	-453.895874	0.961827278	-5.36572123	-0.01994309	-8.54157734	1.894958615
F537	COMB1	2	-444.67984	0.961827278	-5.36572123	-0.01994309	2.189864635	-0.02869575
F537	COMB1	4	-435.463867	0.961827278	-5.36572123	-0.01994309	12.92130661	-1.95235014
F537	COMB2	0	-312.781433	16.1064949	0.320372552	-0.02077939	1.474783421	28.35600853
F537	COMB2	2	-304.717407	16.1064949	0.320372552	-0.02077939	0.834038436	-3.8569808
F537	COMB2	4	-296.653412	16.1064949	0.320372552	-0.02077939	0.193293154	-36.0699692
F537	COMB3	0	-311.474579	5.280413151	10.76859379	-0.02641302	20.98027802	9.390000343
F537	COMB3	2	-303.410553	5.280413151	10.76859379	-0.02641302	-0.55690902	-1.17082584
F537	COMB3	4	-295.346558	5.280413151	10.76859379	-0.02641302	-22.0940971	-11.7316513
F538	D	0	-273.930786	0.009312733	-3.27374077	0.024543045	-5.24970961	-0.0486409
F538	D	2	-266.250793	0.009312733	-3.27374077	0.024543045	1.297771454	-0.06726637
F538	D	4	-258.570801	0.009312733	-3.27374077	0.024543045	7.845252037	-0.08589183
F538	L	0	-78.9129486	-0.22127202	-0.90658355	0.008934879	-1.40622187	-0.39423022
F538	L	2	-78.9129486	-0.22127202	-0.90658355	0.008934879	0.406944901	0.048313778
F538	L	4	-78.9129486	-0.22127202	-0.90658355	0.008934879	2.220111847	0.49085778
F538	EX	0	0.529579103	14.96127415	0.31651926	-0.00176209	0.675916135	26.20655632
F538	EX	2	0.529579103	14.96127415	0.31651926	-0.00176209	0.042877678	-3.71598935
F538	EX	4	0.529579103	14.96127415	0.31651926	-0.00176209	-0.59016079	-33.6385345
F538	EY	0	1.174147129	0.000214481	13.89943409	0.009469981	25.8650856	0.001572998
F538	EY	2	1.174147129	0.000214481	13.89943409	0.009469981	-1.93378055	0.001144036
F538	EY	4	1.174147129	0.000214481	13.89943409	0.009469981	-29.732645	0.000715075
F538	COMB1	0	-454.977692	-0.34285995	-5.3790226	0.043747462	-8.54960632	-0.6891374
F538	COMB1	2	-445.761688	-0.34285995	-5.3790226	0.043747462	2.208437681	-0.0034176
F538	COMB1	4	-436.545685	-0.34285995	-5.3790226	0.043747462	12.96648121	0.682302296
F538	COMB2	0	-311.566956	15.42506409	0.982917428	0.029743969	2.891920328	26.94902611
F538	COMB2	2	-303.50296	15.42506409	0.982917428	0.029743969	0.926085174	-3.90109944
F538	COMB2	4	-295.438965	15.42506409	0.982917428	0.029743969	-1.03974998	-34.7512245
F538	COMB3	0	-311.085236	4.653104305	10.97110748	0.03797311	21.41609764	8.081461906
F538	COMB3	2	-303.02124	4.653104305	10.97110748	0.03797311	-0.52611542	-1.22474623
F538	COMB3	4	-294.957245	4.653104305	10.97110748	0.03797311	-22.4683285	-10.5309544
F539	D	0	-338.616394	-2.3222878	-2.16913748	0.022858666	-3.54542089	-3.59112191
F539	D	2	-330.936401	-2.3222878	-2.16913748	0.022858666	0.792853713	1.053452969
F539	D	4	-323.256378	-2.3222878	-2.16913748	0.022858666	5.131128311	5.698028088
F539	L	0	-100.405762	-0.38601369	-0.77460206	0.00981695	-1.21226418	-0.68642044
F539	L	2	-100.405762	-0.38601369	-0.77460206	0.00981695	0.336939782	0.085606873
F539	L	4	-100.405762	-0.38601369	-0.77460206	0.00981695	1.886143684	0.857634187
F539	EX	0	3.710340738	14.74930954	-0.01908822	-0.03404293	-0.00179632	26.33528137
F539	EX	2	3.710340738	14.74930954	-0.01908822	-0.03404293	0.03638012	-3.16333461
F539	EX	4	3.710340738	14.74930954	-0.01908822	-0.03404293	0.074556559	-32.6619492
F539	EY	0	1.020481586	0.00013569	13.11972618	0.020063486	24.23014641	0.002352148
F539	EY	2	1.020481586	0.00013569	13.11972618	0.020063486	-2.00930333	0.002080768
F539	EY	4	1.020481586	0.00013569	13.11972618	0.020063486	-28.2487526	0.001809388
F539	COMB1	0	-566.988892	-3.40436721	-3.84232831	0.043137521	-6.19412756	-5.407619
F539	COMB1	2	-557.772888	-3.40436721	-3.84232831	0.043137521	1.490528107	1.401114583
F539	COMB1	4	-548.556885	-3.40436721	-3.84232831	0.043137521	9.175183296	8.209848404
F539	COMB2	0	-383.013367	12.70558167	1.591363311	-0.00182049	3.5260818	23.27085495
F539	COMB2	2	-374.949371	12.70558167	1.591363311	-0.00182049	0.343355328	-2.14030409
F539	COMB2	4	-366.885376	12.70558167	1.591363311	-0.00182049	-2.8393712	-27.5514622
F539	COMB3	0	-384.934753	2.086178541	11.24810505	0.037437078	21.33653259	4.311182499
F539	COMB3	2	-376.870758	2.086178541	11.24810505	0.037437078	-1.15967619	0.138826236
F539	COMB3	4	-368.806763	2.086178541	11.24810505	0.037437078	-23.6558857	-4.03352976
F540	D	0	-288.293457	13.44269657	-1.81600153	0.005811541	-2.9231751	27.19341087
F540	D	2	-280.613464	13.44269657	-1.81600153	0.005811541	0.708827436	0.308019161
F540	D	4	-272.933441	13.44269657	-1.81600153	0.005811541	4.340829849	-26.5773735
F540	L	0	-68.6602097	6.002654076	-0.56359005	0.007898285	-0.86897069	10.72131443
F540	L	2	-68.6602097	6.002654076	-0.56359005	0.007898285	0.258209348	-1.28399384
F540	L	4	-68.6602097	6.002654076	-0.56359005	0.007898285	1.385389447	-13.2893009
F540	EX	0	-10.7860765	8.536704063	-0.17332084	-0.02004772	-0.31054586	13.063694
F540	EX	2	-10.7860765	8.536704063	-0.17332084	-0.02004772	0.036095787	-4.00971413
F540	EX	4	-10.7860765	8.536704063	-0.17332084	-0.02004772	0.382737428	-21.0831223
F540	EY	0	0.973622322	9.626E-05	13.27368069	0.022249117	24.41129112	0.001482197
F540	EY	2	0.973622322	9.626E-05	13.27368069	0.022249117	-2.13606715	0.001289677
F540	EY	4	0.973622322	9.626E-05	13.27368069	0.022249117	-28.6834259	0.001097157
F540	COMB1	0	-455.808502	25.73548317	-3.08094597	0.019611105	-4.89816332	49.78619385
F540	COMB1	2	-446.592499	25.73548317	-3.08094597	0.019611105	1.263727784	-1.68476701
F540	COMB1	4	-437.376495	25.73548317	-3.08094597	0.019611105	7.425619125	-53.1557312
F540	COMB2	0	-335.192993	24.84118652	1.917490005	-0.00515084	4.025082111	45.45168686
F540	COMB2	2	-327.128998	24.84118652	1.917490005	-0.00515084	0.190102682	-4.23068571
F540	COMB2	4	-319.065002	24.84118652	1.917490005	-0.00515084	-3.64487696	-53.9130554
F540	COMB3	0	-326.711426	18.69482994	11.79843616	0.025636619	22.19097519	36.04691696
F540	COMB3	2	-318.64743	18.69482994	11.79843616	0.025636619	-1.40589571	-1.34274364

F540	COMB3	4	-310.583405	18.69482994	11.79843616	0.025636619	-25.0027657	-38.7324028
F541	D	0	-162.348907	-10.2039156	19.12021828	0.076744646	35.18098831	-22.6321945
F541	D	2	-154.6689	-10.2039156	19.12021828	0.076744646	-3.059443	-2.22436714
F541	D	4	-146.988907	-10.2039156	19.12021828	0.076744646	-41.2998734	18.18346214
F541	L	0	-22.2940273	-4.75621033	3.483593702	-0.03625447	6.367509365	-8.43277836
F541	L	2	-22.2940273	-4.75621033	3.483593702	-0.03625447	-0.59967726	1.079641819
F541	L	4	-22.2940273	-4.75621033	3.483593702	-0.03625447	-7.56686354	10.59206104
F541	EX	0	10.59463596	8.572940826	-0.10844193	-0.12797542	-0.30051619	12.9478569
F541	EX	2	10.59463596	8.572940826	-0.10844193	-0.12797542	-0.08363236	-4.19802237
F541	EX	4	10.59463596	8.572940826	-0.10844193	-0.12797542	0.133251458	-21.3439007
F541	EY	0	-6.81915569	-0.0084868	8.07498455	-0.03835573	13.10665417	-0.00819096
F541	EY	2	-6.81915569	-0.0084868	8.07498455	-0.03835573	-3.0433135	0.008782636
F541	EY	4	-6.81915569	-0.0084868	8.07498455	-0.03835573	-19.1932831	0.025756229
F541	COMB1	0	-230.48912	-19.8546352	28.51801109	0.034086425	52.40520096	-40.6510773
F541	COMB1	2	-221.273132	-19.8546352	28.51801109	0.034086425	-4.63081503	-0.94181353
F541	COMB1	4	-212.057129	-19.8546352	28.51801109	0.034086425	-61.6668282	38.76745224
F541	COMB2	0	-168.671555	-3.34199739	23.60494423	-0.07537489	42.7633667	-13.021677
F541	COMB2	2	-160.607559	-3.34199739	23.60494423	-0.07537489	-4.44651699	-6.33768463
F541	COMB2	4	-152.543564	-3.34199739	23.60494423	-0.07537489	-51.656395	0.346309572
F541	COMB3	0	-181.311768	-9.52075195	29.61813545	-0.01142406	52.61312866	-22.3501549
F541	COMB3	2	-173.247772	-9.52075195	29.61813545	-0.01142406	-6.623137	-3.30865335
F541	COMB3	4	-165.183777	-9.52075195	29.61813545	-0.01142406	-65.8593979	15.73284912
F542	D	0	-234.674835	0.363841116	23.21294022	-0.00495259	42.64014053	1.00079596
F542	D	2	-226.994827	0.363841116	23.21294022	-0.00495259	-3.7857399	0.273113817
F542	D	4	-219.314835	0.363841116	23.21294022	-0.00495259	-50.2116165	-0.45456836
F542	L	0	-50.4272575	0.219692141	7.195054054	-0.02475061	13.17196655	0.406040609
F542	L	2	-50.4272575	0.219692141	7.195054054	-0.02475061	-1.21814084	-0.03334365
F542	L	4	-50.4272575	0.219692141	7.195054054	-0.02475061	-15.6082478	-0.47272792
F542	EX	0	-3.66242671	14.73344326	0.053983331	-0.06849675	0.054936077	26.22118568
F542	EX	2	-3.66242671	14.73344326	0.053983331	-0.06849675	-0.05303057	-3.24569845
F542	EX	4	-3.66242671	14.73344326	0.053983331	-0.06849675	-0.16099723	-32.7125816
F542	EY	0	-6.9447875	0.0124869	8.015152931	-0.03839848	13.20730591	0.02756606
F542	EY	2	-6.9447875	0.0124869	8.015152931	-0.03839848	-2.82299805	0.002592262
F542	EY	4	-6.9447875	0.0124869	8.015152931	-0.03839848	-18.853302	-0.02238154
F542	COMB1	0	-362.293396	0.788116813	39.36761475	-0.04554408	72.24331665	1.850620151
F542	COMB1	2	-353.077423	0.788116813	39.36761475	-0.04554408	-6.49191332	0.274386704
F542	COMB1	4	-343.86142	0.788116813	39.36761475	-0.04554408	-85.2271347	-1.30184674
F542	COMB2	0	-268.271393	15.70428371	29.22067642	-0.09598631	53.13847733	28.32634926
F542	COMB2	2	-260.207367	15.70428371	29.22067642	-0.09598631	-5.30287218	-3.08221507
F542	COMB2	4	-252.143387	15.70428371	29.22067642	-0.09598631	-63.7442169	-34.4907799
F542	COMB3	0	-270.738861	5.105381966	35.07294464	-0.07489154	62.80629349	9.467356682
F542	COMB3	2	-262.674866	5.105381966	35.07294464	-0.07489154	-7.33959389	-0.74340689
F542	COMB3	4	-254.610855	5.105381966	35.07294464	-0.07489154	-77.4854736	-10.9541702
F543	D	0	-188.154938	0.46715945	24.36674309	-0.01943333	42.8153801	0.74732554
F543	D	2	-180.47493	0.46715945	24.36674309	-0.01943333	-5.91809988	-0.1869932
F543	D	4	-172.794937	0.46715945	24.36674309	-0.01943333	-54.6515808	-1.1213119
F543	L	0	-47.5641518	0.197327286	7.620059967	-0.01095058	13.39251804	0.374825507
F543	L	2	-47.5641518	0.197327286	7.620059967	-0.01095058	-1.84760165	-0.01982902
F543	L	4	-47.5641518	0.197327286	7.620059967	-0.01095058	-17.0877209	-0.41448355
F543	EX	0	-0.42425361	14.85038757	-0.26866275	0.00289414	-0.6251353	25.87179184
F543	EX	2	-0.42425361	14.85038757	-0.26866275	0.00289414	-0.08780987	-3.82897902
F543	EX	4	-0.42425361	14.85038757	-0.26866275	0.00289414	0.449515581	-33.5297508
F543	EY	0	-5.96216393	0.022002712	8.701747894	-0.02336862	15.03216934	0.035292514
F543	EY	2	-5.96216393	0.022002712	8.701747894	-0.02336862	-2.3713243	-0.00871291
F543	EY	4	-5.96216393	0.022002712	8.701747894	-0.02336862	-19.7748184	-0.05271833
F543	COMB1	0	-301.88855	0.876314998	41.43218994	-0.04084092	72.80648804	1.496511459
F543	COMB1	2	-292.672577	0.876314998	41.43218994	-0.04084092	-10.0578823	-0.25611827
F543	COMB1	4	-283.456573	0.876314998	41.43218994	-0.04084092	-92.9222488	-2.00874805
F543	COMB2	0	-214.862579	15.92975712	30.44838524	-0.02822011	53.26291275	27.69118309
F543	COMB2	2	-206.798569	15.92975712	30.44838524	-0.02822011	-7.63384962	-4.16832685
F543	COMB2	4	-198.734573	15.92975712	30.44838524	-0.02822011	-68.5306091	-36.0278397
F543	COMB3	0	-218.939301	5.253650188	37.03760529	-0.04747982	64.76165771	9.08943367
F543	COMB3	2	-210.875305	5.253650188	37.03760529	-0.04747982	-9.31355	-1.41786587
F543	COMB3	4	-202.81131	5.253650188	37.03760529	-0.04747982	-83.3887558	-11.9251652
F544	D	0	-188.007187	-0.15632553	24.35930061	0.029342163	42.80273819	-0.16825043
F544	D	2	-180.327194	-0.15632553	24.35930061	0.029342163	-5.91586018	0.144400612
F544	D	4	-172.647171	-0.15632553	24.35930061	0.029342163	-54.6344604	0.457051635
F544	L	0	-47.9175644	-0.08946897	7.737950802	0.015879884	13.58653164	-0.16298069
F544	L	2	-47.9175644	-0.08946897	7.737950802	0.015879884	-1.88936853	0.015957242
F544	L	4	-47.9175644	-0.08946897	7.737950802	0.015879884	-17.3652668	0.194895163
F544	EX	0	0.336747646	14.77055264	0.266016722	0.021522608	0.620179713	25.72979355
F544	EX	2	0.336747646	14.77055264	0.266016722	0.021522608	0.088146277	-3.81130862
F544	EX	4	0.336747646	14.77055264	0.266016722	0.021522608	-0.44388711	-33.3524132
F544	EY	0	-5.96215582	-0.02200407	8.70173645	0.023366528	15.03215218	-0.03529477
F544	EY	2	-5.96215582	-0.02200407	8.70173645	0.023366528	-2.37131882	0.008713357
F544	EY	4	-5.96215582	-0.02200407	8.70173645	0.023366528	-19.7747898	0.052721482
F544	COMB1	0	-302.276733	-0.33074099	41.61188126	0.060618412	73.10173798	-0.46266961
F544	COMB1	2	-293.06073	-0.33074099	41.61188126	0.060618412	-10.1220217	0.198812321
F544	COMB1	4	-283.844727	-0.33074099	41.61188126	0.060618412	-93.3457794	0.860294223
F544	COMB2	0	-214.031128	15.08826637	31.0310936	0.065447792	54.59964752	26.39121628
F544	COMB2	2	-205.967133	15.08826637	31.0310936	0.065447792	-7.46253824	-3.78531265
F544	COMB2	4	-197.903107	15.08826637	31.0310936	0.065447792	-69.5247192	-33.9618416
F544	COMB3	0	-218.655762	4.437295437	37.23534012	0.067125909	65.20175171	7.839823723
F544	COMB3	2	-210.591766	4.437295437	37.23534012	0.067125909	-9.26892281	-1.03476608

F544	COMB3	4	-202.527756	4.437295437	37.23534012	0.067125909	-83.7395935	-9.90935612
F545	D	0	-235.049545	-0.33498386	23.35861206	0.007537664	42.88527679	-0.91751951
F545	D	2	-227.369553	-0.33498386	23.35861206	0.007537664	-3.83194351	-0.24755183
F545	D	4	-219.68956	-0.33498386	23.35861206	0.007537664	-50.5491638	0.422415853
F545	L	0	-59.6540833	-0.22671704	9.58408165	0.026560685	17.5553875	-0.39734638
F545	L	2	-59.6540833	-0.22671704	9.58408165	0.026560685	-1.6127727	0.056087673
F545	L	4	-59.6540833	-0.22671704	9.58408165	0.026560685	-20.7809334	0.509521723
F545	EX	0	3.594923735	14.54865551	-0.05375276	-0.02533057	-0.05284719	25.83729744
F545	EX	2	3.594923735	14.54865551	-0.05375276	-0.02533057	0.054658309	-3.2600112
F545	EX	4	3.594923735	14.54865551	-0.05375276	-0.02533057	0.162163809	-32.3573189
F545	EY	0	-6.94478559	-0.01248851	8.01515007	0.03840128	13.20730019	-0.02756871
F545	EY	2	-6.94478559	-0.01248851	8.01515007	0.03840128	-2.82299829	-0.00259169
F545	EY	4	-6.94478559	-0.01248851	8.01515007	0.03840128	-18.8532963	0.022385331
F545	COMB1	0	-377.505981	-0.76472789	43.36486435	0.051542293	79.55095673	-1.73677766
F545	COMB1	2	-368.290009	-0.76472789	43.36486435	0.051542293	-7.17876816	-0.20732191
F545	COMB1	4	-359.074005	-0.76472789	43.36486435	0.051542293	-93.908493	1.32213378
F545	COMB2	0	-264.059937	14.63077545	30.01466751	0.002160424	54.66509247	25.64435959
F545	COMB2	2	-255.995926	14.63077545	30.01466751	0.002160424	-5.36423683	-3.61718965
F545	COMB2	4	-247.931931	14.63077545	30.01466751	0.002160424	-65.3935623	-32.8787384
F545	COMB3	0	-271.752686	4.146564484	35.94450378	0.048623376	64.4105072	7.021242142
F545	COMB3	2	-263.68869	4.146564484	35.94450378	0.048623376	-7.47849464	-1.27188659
F545	COMB3	4	-255.624695	4.146564484	35.94450378	0.048623376	-79.3675003	-9.56501484
F546	D	0	-176.172699	10.03230858	22.58610153	-0.07289538	41.5557518	22.35838699
F546	D	2	-168.492676	10.03230858	22.58610153	-0.07289538	-3.61644363	2.293771029
F546	D	4	-160.812683	10.03230858	22.58610153	-0.07289538	-48.7886391	-17.7708454
F546	L	0	-37.1017952	4.809597969	7.230956554	0.044817261	13.24429798	8.540987015
F546	L	2	-37.1017952	4.809597969	7.230956554	0.044817261	-1.21761394	-1.07820714
F546	L	4	-37.1017952	4.809597969	7.230956554	0.044817261	-15.6795254	-10.697402
F546	EX	0	-10.4390612	8.278046608	0.111289874	-0.00024253	0.303152561	12.46267509
F546	EX	2	-10.4390612	8.278046608	0.111289874	-0.00024253	0.080572829	-4.09341621
F546	EX	4	-10.4390612	8.278046608	0.111289874	-0.00024253	-0.14200689	-20.6495075
F546	EY	0	-6.81915665	0.008485883	8.074987411	0.038356345	13.10665798	0.008189849
F546	EY	2	-6.81915665	0.008485883	8.074987411	0.038356345	-3.04331517	-0.00878192
F546	EY	4	-6.81915665	0.008485883	8.074987411	0.038356345	-19.1932869	-0.02575368
F546	COMB1	0	-270.770111	19.73412704	38.67285156	-0.01576683	71.0577774	40.49564362
F546	COMB1	2	-261.554077	19.73412704	38.67285156	-0.01576683	-6.28791475	1.027393818
F546	COMB1	4	-252.338089	19.73412704	38.67285156	-0.01576683	-83.633606	-38.4408569
F546	COMB2	0	-209.620865	20.61939812	28.65196419	-0.05059147	52.24785614	39.06816483
F546	COMB2	2	-201.556839	20.61939812	28.65196419	-0.05059147	-5.05606556	-2.17062759
F546	COMB2	4	-193.492844	20.61939812	28.65196419	-0.05059147	-62.3599815	-43.40942
F546	COMB3	0	-207.116821	14.66544247	34.50695038	-0.02222494	61.66297913	30.10105896
F546	COMB3	2	-199.052795	14.66544247	34.50695038	-0.02222494	-7.35091448	0.770177245
F546	COMB3	4	-190.9888	14.66544247	34.50695038	-0.02222494	-76.3648071	-28.5607052
F547	D	0	11.18218422	-50.5717506	1.451290727	-0.63946545	3.858822823	-41.3179207
F547	D	1.25	11.18218422	-28.8264351	1.451290727	-0.63946545	2.044709206	9.388298988
F547	D	2.5	11.18218422	-0.01549599	1.451290727	-0.63946545	0.230595827	27.527071
F547	D	3.75	11.18218422	28.79544258	1.451290727	-0.63946545	-1.58351767	9.427038193
F547	D	5	11.18218422	50.54075623	1.451290727	-0.63946545	-3.39763117	-41.2404442
F547	L	0	-2.67549157	-5.72236061	-0.05793331	-0.58146554	-0.14448908	-3.26029611
F547	L	1.25	-2.67549157	-3.76923561	-0.05793331	-0.58146554	-0.07207245	3.07885313
F547	L	2.5	-2.67549157	0.840139449	-0.05793331	-0.58146554	0.000344192	4.951855659
F547	L	3.75	-2.67549157	5.449514866	-0.05793331	-0.58146554	0.072760828	0.978504181
F547	L	5	-2.67549157	7.402639389	-0.05793331	-0.58146554	0.145177469	-7.46099377
F547	EX	0	-56.7101517	8.609845161	-0.47392568	-0.01047576	-1.20491648	23.12384796
F547	EX	1.25	-56.7101517	8.609845161	-0.47392568	-0.01047576	-0.61250937	12.36154175
F547	EX	2.5	-56.7101517	8.609845161	-0.47392568	-0.01047576	-0.02010226	1.599234581
F547	EX	3.75	-56.7101517	8.609845161	-0.47392568	-0.01047576	0.572304845	-9.16307163
F547	EX	5	-56.7101517	8.609845161	-0.47392568	-0.01047576	1.164711952	-19.9253788
F547	EY	0	0.378311515	0.020407842	0.223709419	-0.00416039	0.783670306	-0.00100518
F547	EY	1.25	0.378311515	0.020407842	0.223709419	-0.00416039	0.504033566	-0.02651499
F547	EY	2.5	0.378311515	0.020407842	0.223709419	-0.00416039	0.22439675	-0.05202479
F547	EY	3.75	0.378311515	0.020407842	0.223709419	-0.00416039	-0.05524005	-0.07753459
F547	EY	5	0.378311515	0.020407842	0.223709419	-0.00416039	-0.33487684	-0.10304441
F547	COMB1	0	9.137834549	-69.8418732	1.648855567	-1.69770348	4.399405003	-54.7979813
F547	COMB1	1.25	9.137834549	-40.6224976	1.648855567	-1.69770348	2.338335276	16.19212341
F547	COMB1	2.5	9.137834549	1.325627923	1.648855567	-1.69770348	0.277265698	40.95545578
F547	COMB1	3.75	9.137834549	43.27375412	1.648855567	-1.69770348	-1.78380394	12.87805271
F547	COMB1	5	9.137834549	72.49313354	1.648855567	-1.69770348	-3.84487343	-61.4261246
F547	COMB2	0	-47.6773262	-45.98526	1.085561633	-0.86675334	3.006017685	-20.4779453
F547	COMB2	1.25	-47.6773262	-22.537447	1.085561633	-0.86675334	1.649065256	23.61339569
F547	COMB2	2.5	-47.6773262	9.165990829	1.085561633	-0.86675334	0.292113155	32.10207748
F547	COMB2	3.75	-47.6773262	40.86943054	1.085561633	-0.86675334	-1.06483901	0.698415816
F547	COMB2	5	-47.6773262	64.31724548	1.085561633	-0.86675334	-2.42179108	-66.3079071
F547	COMB3	0	-6.5679574	-52.1693497	1.591214538	-0.86226863	4.44955492	-37.1278534
F547	COMB3	1.25	-6.5679574	-28.7215366	1.591214538	-0.86226863	2.460536718	14.69359684
F547	COMB3	2.5	-6.5679574	2.981902599	1.591214538	-0.86226863	0.471518397	30.91239166
F547	COMB3	3.75	-6.5679574	34.68534088	1.591214538	-0.86226863	-1.51749992	7.238839626
F547	COMB3	5	-6.5679574	58.13315582	1.591214538	-0.86226863	-3.50651836	-52.0373726
F548	D	0	17.04368019	-51.3417282	1.41000402	1.404538631	3.371459007	-46.3029633
F548	D	1.25	17.04368019	-29.5964146	1.41000402	1.404538631	1.608953834	5.365735531
F548	D	2.5	17.04368019	-0.78547722	1.41000402	1.404538631	-0.15355131	24.4669838
F548	D	3.75	17.04368019	28.0254612	1.41000402	1.404538631	-1.91605639	7.329428673
F548	D	5	17.04368019	49.77077484	1.41000402	1.404538631	-3.67856145	-42.375576
F548	L	0	-3.16460681	-6.65603352	-0.0320609	0.510339379	-0.06599165	-6.25331497

F548	L	1.25	-3.16460681	-4.70290899	-0.0320609	0.510339379	-0.02591553	1.252925396
F548	L	2.5	-3.16460681	-0.09353344	-0.0320609	0.510339379	0.014160597	4.293019772
F548	L	3.75	-3.16460681	4.515841961	-0.0320609	0.510339379	0.054236725	1.486759067
F548	L	5	-3.16460681	6.468966961	-0.0320609	0.510339379	0.094312847	-5.78564739
F548	EX	0	-45.9632225	7.157620907	-0.71698207	-0.02973575	-1.5607729	18.20135498
F548	EX	1.25	-45.9632225	7.157620907	-0.71698207	-0.02973575	-0.66454524	9.254327774
F548	EX	2.5	-45.9632225	7.157620907	-0.71698207	-0.02973575	0.23168233	0.307301849
F548	EX	3.75	-45.9632225	7.157620907	-0.71698207	-0.02973575	1.127909899	-8.63972378
F548	EX	5	-45.9632225	7.157620907	-0.71698207	-0.02973575	2.024137497	-17.58675
F548	EY	0	1.554141164	-0.20067579	0.936010182	-0.09183908	2.250801802	-0.52367145
F548	EY	1.25	1.554141164	-0.20067579	0.936010182	-0.09183908	1.080789089	-0.27282667
F548	EY	2.5	1.554141164	-0.20067579	0.936010182	-0.09183908	-0.0892237	-0.02198192
F548	EY	3.75	1.554141164	-0.20067579	0.936010182	-0.09183908	-1.25923645	0.228862837
F548	EY	5	1.554141164	-0.20067579	0.936010182	-0.09183908	-2.42924929	0.479707569
F548	COMB1	0	15.38904476	-72.2597275	1.640707374	2.501989365	3.940164089	-65.5688629
F548	COMB1	1.25	15.38904476	-43.0403519	1.640707374	2.501989365	1.889279842	8.443563461
F548	COMB1	2.5	15.38904476	-1.09222615	1.640707374	2.501989365	-0.16160461	36.22921371
F548	COMB1	3.75	15.38904476	40.85589981	1.640707374	2.501989365	-2.21248889	11.17412853
F548	COMB1	5	15.38904476	70.07527924	1.640707374	2.501989365	-4.26337337	-60.1077271
F548	COMB2	0	-30.1833706	-48.6605415	1.023171782	1.575816631	2.61284709	-31.9144611
F548	COMB2	1.25	-30.1833706	-25.2127285	1.023171782	1.575816631	1.333882332	15.52098274
F548	COMB2	2.5	-30.1833706	6.490710258	1.023171782	1.575816631	0.054917455	27.3537674
F548	COMB2	3.75	-30.1833706	38.19414902	1.023171782	1.575816631	-1.2240473	-0.70579356
F548	COMB2	5	-30.1833706	61.64196396	1.023171782	1.575816631	-2.50301218	-64.3680115
F548	COMB3	0	4.052445412	-53.961525	2.227366447	1.529724717	5.39094305	-45.404335
F548	COMB3	1.25	4.052445412	-30.5137119	2.227366447	1.529724717	2.606734991	8.657339096
F548	COMB3	2.5	4.052445412	1.18972683	2.227366447	1.529724717	-0.17747323	27.11635399
F548	COMB3	3.75	4.052445412	32.89316559	2.227366447	1.529724717	-2.96168137	5.683022022
F548	COMB3	5	4.052445412	56.34098053	2.227366447	1.529724717	-5.74588966	-51.3529663
F549	D	0	24.33544922	-50.5083084	-0.01267544	0.00165904	1.376002073	-48.4953613
F549	D	1.25	24.33544922	-28.7629929	-0.01267544	0.00165904	1.391846299	2.131557465
F549	D	2.5	24.33544922	0.047945745	-0.01267544	0.00165904	1.407690525	20.19102859
F549	D	3.75	24.33544922	28.85888481	-0.01267544	0.00165904	1.42353487	2.011693239
F549	D	5	24.33544922	50.60419846	-0.01267544	0.00165904	1.439379215	-48.7350922
F549	L	0	-1.62595284	-6.45527315	-0.01360475	-0.03778669	-0.07869733	-7.53619003
F549	L	1.25	-1.62595284	-4.50214815	-0.01360475	-0.03778669	-0.06169139	-0.28090048
F549	L	2.5	-1.62595284	0.107226931	-0.01360475	-0.03778669	-0.04468546	2.508243084
F549	L	3.75	-1.62595284	4.716601849	-0.01360475	-0.03778669	-0.02767952	-0.54896784
F549	L	5	-1.62595284	6.669727325	-0.01360475	-0.03778669	-0.01067358	-8.07232475
F549	EX	0	-31.4823952	6.719455719	-0.55839795	0.060146488	-1.50301075	16.80597687
F549	EX	1.25	-31.4823952	6.719455719	-0.55839795	0.060146488	-0.80501324	8.406657219
F549	EX	2.5	-31.4823952	6.719455719	-0.55839795	0.060146488	-0.10701584	0.007336913
F549	EX	3.75	-31.4823952	6.719455719	-0.55839795	0.060146488	0.590981603	-8.39198399
F549	EX	5	-31.4823952	6.719455719	-0.55839795	0.060146488	1.288978934	-16.7913036
F549	EY	0	2.241223812	-7.5124E-07	-9.3734E-06	1.81041E-06	-0.6028558	0.130780548
F549	EY	1.25	2.241223812	-7.5124E-07	-9.3734E-06	1.81041E-06	-0.60284412	0.130781487
F549	EY	2.5	2.241223812	-7.5124E-07	-9.3734E-06	1.81041E-06	-0.60283238	0.130782425
F549	EY	3.75	2.241223812	-7.5124E-07	-9.3734E-06	1.81041E-06	-0.60282069	0.130783364
F549	EY	5	2.241223812	-7.5124E-07	-9.3734E-06	1.81041E-06	-0.60280895	0.130784303
F549	COMB1	0	26.60101509	-70.9384079	-0.03697813	-0.05846786	1.525286674	-70.2523422
F549	COMB1	1.25	26.60101509	-41.7190285	-0.03697813	-0.05846786	1.571509361	2.10842824
F549	COMB1	2.5	26.60101509	0.229097977	-0.03697813	-0.05846786	1.617731929	28.2424221
F549	COMB1	3.75	26.60101509	42.17722321	-0.03697813	-0.05846786	1.663954616	1.535683274
F549	COMB1	5	26.60101509	71.39659882	-0.03697813	-0.05846786	1.710177302	-71.3978271
F549	COMB2	0	-6.83824635	-48.112495	-0.59553951	0.052091371	-0.3255032	-35.8586502
F549	COMB2	1.25	-6.83824635	-24.6646824	-0.59553951	0.052091371	0.418921262	10.89173794
F549	COMB2	2.5	-6.83824635	7.038756371	-0.59553951	0.052091371	1.163345575	22.03946686
F549	COMB2	3.75	-6.83824635	38.74219513	-0.59553951	0.052091371	1.907770038	-6.70515347
F549	COMB2	5	-6.83824635	62.19000626	-0.59553951	0.052091371	2.6521945	-71.0524292
F549	COMB3	0	17.47637749	-52.9505043	-0.19349989	0.008787229	0.313565522	-47.8628273
F549	COMB3	1.25	17.47637749	-29.5026913	-0.19349989	0.008787229	0.555440426	4.935069561
F549	COMB3	2.5	17.47637749	2.200747252	-0.19349989	0.008787229	0.79731518	22.13030815
F549	COMB3	3.75	17.47637749	33.90418625	-0.19349989	0.008787229	1.039190054	-0.56679934
F549	COMB3	5	17.47637749	57.35199738	-0.19349989	0.008787229	1.281064987	-58.8665657
F550	D	0	17.31132126	-49.5694962	-1.42879105	-1.43219614	-3.72849894	-41.9857445
F550	D	1.25	17.31132126	-27.8241844	-1.42879105	-1.43219614	-1.94250989	7.467665672
F550	D	2.5	17.31132126	0.986753643	-1.42879105	-1.43219614	-0.15652102	24.35362625
F550	D	3.75	17.31132126	29.79769325	-1.42879105	-1.43219614	1.629467845	5.000782013
F550	D	5	17.31132126	51.5430069	-1.42879105	-1.43219614	3.415456772	-46.9195137
F550	L	0	-3.12217808	-6.4939189	0.002769517	-0.83258021	0.021236764	-5.87794113
F550	L	1.25	-3.12217808	-4.54079437	0.002769517	-0.83258021	0.017774869	1.42565608
F550	L	2.5	-3.12217808	0.068580985	0.002769517	-0.83258021	0.01431297	4.2631073
F550	L	3.75	-3.12217808	4.677956104	0.002769517	-0.83258021	0.010851073	1.254203677
F550	L	5	-3.12217808	6.631081104	0.002769517	-0.83258021	0.007389177	-6.2208457
F550	EX	0	-16.5106888	7.070746422	-0.60436952	-0.02986894	-1.63227224	17.42866135
F550	EX	1.25	-16.5106888	7.070746422	-0.60436952	-0.02986894	-0.87681037	8.590227127
F550	EX	2.5	-16.5106888	7.070746422	-0.60436952	-0.02986894	-0.12134851	-0.24820697
F550	EX	3.75	-16.5106888	7.070746422	-0.60436952	-0.02986894	0.634113371	-9.08664036
F550	EX	5	-16.5106888	7.070746422	-0.60436952	-0.02986894	1.389575243	-17.9250755
F550	EY	0	1.554128647	0.200677603	-0.93600744	0.091837555	-2.42923665	0.479712427
F550	EY	1.25	1.554128647	0.200677603	-0.93600744	0.091837555	-1.25922728	0.22886543
F550	EY	2.5	1.554128647	0.200677603	-0.93600744	0.091837555	-0.08921788	-0.02198158
F550	EY	3.75	1.554128647	0.200677603	-0.93600744	0.091837555	1.080791473	-0.27282858
F550	EY	5	1.554128647	0.200677603	-0.93600744	0.091837555	2.250800848	-0.52367562

F550	COMB1	0	15.77810097	-69.8736649	-1.71011806	-3.05076361	-4.44021988	-59.7875977
F550	COMB1	1.25	15.77810097	-40.6542931	-1.71011806	-3.05076361	-2.30257201	11.24224854
F550	COMB1	2.5	15.77810097	1.293833971	-1.71011806	-3.05076361	-0.16492447	36.04532242
F550	COMB1	3.75	15.77810097	43.24196243	-1.71011806	-3.05076361	1.972723126	8.00766468
F550	COMB1	5	15.77810097	72.46134186	-1.71011806	-3.05076361	4.110371113	-66.2567673
F550	COMB2	0	0.594388902	-46.7121201	-2.41972303	-1.76805425	-6.36284542	-27.7468071
F550	COMB2	1.25	0.594388902	-23.2643089	-2.41972303	-1.76805425	-3.33819151	17.25310898
F550	COMB2	2.5	0.594388902	8.439130783	-2.41972303	-1.76805425	-0.31353784	26.65036774
F550	COMB2	3.75	0.594388902	40.1425705	-2.41972303	-1.76805425	2.711116076	-3.84471869
F550	COMB2	5	0.594388902	63.59038544	-2.41972303	-1.76805425	5.735769749	-69.9424667
F550	COMB3	0	13.62436962	-51.6555595	-2.67254257	-1.67904794	-6.97309828	-39.9428558
F550	COMB3	1.25	13.62436962	-28.2077484	-2.67254257	-1.67904794	-3.63242006	11.23636055
F550	COMB3	2.5	13.62436962	3.495691061	-2.67254257	-1.67904794	-0.29174206	26.81291962
F550	COMB3	3.75	13.62436962	35.19913101	-2.67254257	-1.67904794	3.048936129	2.497133493
F550	COMB3	5	13.62436962	58.64694595	-2.67254257	-1.67904794	6.389614582	-57.4213142
F551	D	0	11.37569523	-50.6013336	-1.49078012	0.148651645	-3.49349856	-41.4715996
F551	D	1.25	11.37569523	-28.85602	-1.49078012	0.148651645	-1.63002336	9.271604538
F551	D	2.5	11.37569523	-0.0450813	-1.49078012	0.148651645	0.233451858	27.44735718
F551	D	3.75	11.37569523	28.76585579	-1.49078012	0.148651645	2.096926928	9.384307861
F551	D	5	11.37569523	50.51116943	-1.49078012	0.148651645	3.960402012	-41.2461929
F551	L	0	-2.68251896	-7.29756498	0.026212119	0.379931688	0.07163123	-7.17960262
F551	L	1.25	-2.68251896	-5.34444046	0.026212119	0.379931688	0.038866077	1.128552198
F551	L	2.5	-2.68251896	-0.73506504	0.026212119	0.379931688	0.006100927	4.970561028
F551	L	3.75	-2.68251896	3.874310017	0.026212119	0.379931688	-0.02666422	2.966214895
F551	L	5	-2.68251896	5.827435017	0.026212119	0.379931688	-0.05942937	-3.50427723
F551	EX	0	-5.85603619	8.474648476	-0.64962852	-0.01080704	-1.46419084	19.58116341
F551	EX	1.25	-5.85603619	8.474648476	-0.64962852	-0.01080704	-0.65215522	8.98785305
F551	EX	2.5	-5.85603619	8.474648476	-0.64962852	-0.01080704	0.159880459	-1.60545778
F551	EX	3.75	-5.85603619	8.474648476	-0.64962852	-0.01080704	0.97191608	-12.1987677
F551	EX	5	-5.85603619	8.474648476	-0.64962852	-0.01080704	1.783951879	-22.7920799
F551	EY	0	0.378305972	-0.02040698	-0.22370856	0.004159775	-0.33487511	-0.10304269
F551	EY	1.25	0.378305972	-0.02040698	-0.22370856	0.004159775	-0.05523939	-0.07753396
F551	EY	2.5	0.378305972	-0.02040698	-0.22370856	0.004159775	0.224396303	-0.05202523
F551	EY	3.75	0.378305972	-0.02040698	-0.22370856	0.004159775	0.504032016	-0.02651649
F551	EY	5	0.378305972	-0.02040698	-0.22370856	0.004159775	0.783667684	-0.00100776
F551	COMB1	0	9.358803749	-72.3977051	-1.74699676	0.786272645	-4.07758808	-61.2532845
F551	COMB1	1.25	9.358803749	-43.1783257	-1.74699676	0.786272645	-1.89384222	12.93160915
F551	COMB1	2.5	9.358803749	-1.2302016	-1.74699676	0.786272645	0.28990373	40.88972855
F551	COMB1	3.75	9.358803749	40.71792221	-1.74699676	0.786272645	2.47364974	16.0071125
F551	COMB1	5	9.358803749	69.93730164	-1.74699676	0.786272645	4.657395363	-55.1022758
F551	COMB2	0	5.157655239	-46.6653023	-2.299896	0.265887737	-5.2665329	-25.57271
F551	COMB2	1.25	5.157655239	-23.2174854	-2.299896	0.265887737	-2.39166284	19.36868286
F551	COMB2	2.5	5.157655239	8.485951424	-2.299896	0.265887737	0.483207375	28.70741653
F551	COMB2	3.75	5.157655239	40.18938828	-2.299896	0.265887737	3.358077288	-1.84619701
F551	COMB2	5	5.157655239	63.63720322	-2.299896	0.265887737	6.23294735	-68.0024719
F551	COMB3	0	9.652056694	-52.7820473	-1.9965893	0.276726246	-4.45844841	-39.7468834
F551	COMB3	1.25	9.652056694	-29.3342323	-1.9965893	0.276726246	-1.96271193	12.8404417
F551	COMB3	2.5	9.652056694	2.369205952	-1.9965893	0.276726246	0.533024728	29.82510757
F551	COMB3	3.75	9.652056694	34.07264328	-1.9965893	0.276726246	3.028761387	6.917426586
F551	COMB3	5	9.652056694	57.52045822	-1.9965893	0.276726246	5.524497986	-51.5929146
F552	D	0	-10.6387396	-68.6389694	-2.12962532	12.75366974	-4.79349232	-54.4359818
F552	D	0.75	-10.6387396	-56.2986641	-2.12962532	12.75366974	-3.1962738	-7.350595
F552	D	1.5	-10.6387396	-40.2177315	-2.12962532	12.75366974	-1.59905529	29.07683182
F552	D	2.25	-10.6387396	-24.136797	-2.12962532	12.75366974	-0.00183682	52.97597885
F552	D	3	-10.6387396	-11.7964888	-2.12962532	12.75366974	1.595381737	66.21717072
F552	L	0	-2.57364178	-10.5033932	0.012665678	4.833990574	0.087272845	-9.43558788
F552	L	0.75	-2.57364178	-9.80026913	0.012665678	4.833990574	0.077773593	-1.73382688
F552	L	1.5	-2.57364178	-7.6908946	0.012665678	4.833990574	0.068274334	4.913248062
F552	L	2.25	-2.57364178	-5.58152008	0.012665678	4.833990574	0.058775079	9.802511215
F552	L	3	-2.57364178	-4.87839556	0.012665678	4.833990574	0.049275823	13.63708782
F552	EX	0	-0.21259773	0.522003472	0.301291615	-1.56374133	1.138657331	0.748668075
F552	EX	0.75	-0.21259773	0.522003472	0.301291615	-1.56374133	0.912688613	0.357165605
F552	EX	1.5	-0.21259773	0.522003472	0.301291615	-1.56374133	0.686720014	-0.03433688
F552	EX	2.25	-0.21259773	0.522003472	0.301291615	-1.56374133	0.460751384	-0.42583936
F552	EX	3	-0.21259773	0.522003472	0.301291615	-1.56374133	0.23478274	-0.8173418
F552	EY	0	-65.8735809	6.174388885	-0.31897724	0.004274581	-0.75072581	20.24253464
F552	EY	0.75	-65.8735809	6.174388885	-0.31897724	0.004274581	-0.51149291	15.61174393
F552	EY	1.5	-65.8735809	6.174388885	-0.31897724	0.004274581	-0.27226004	10.98095322
F552	EY	2.25	-65.8735809	6.174388885	-0.31897724	0.004274581	-0.03302718	6.35016346
F552	EY	3	-65.8735809	6.174388885	-0.31897724	0.004274581	0.206205696	1.719373107
F552	COMB1	0	-16.8843136	-99.1721954	-2.53528523	23.03878975	-5.61255455	-80.4201202
F552	COMB1	0.75	-16.8843136	-83.2388229	-2.53528523	23.03878975	-3.7110908	-11.5948372
F552	COMB1	1.5	-16.8843136	-60.5667076	-2.53528523	23.03878975	-1.80962741	42.75339508
F552	COMB1	2.25	-16.8843136	-37.8945885	-2.53528523	23.03878975	0.091835946	79.25519562
F552	COMB1	3	-16.8843136	-21.9612198	-2.53528523	23.03878975	1.993299365	101.2799454
F552	COMB2	0	-32.9515915	-72.8942871	-2.02075791	13.29693413	-4.06364441	-52.9787216
F552	COMB2	0.75	-32.9515915	-59.7154732	-2.02075791	13.29693413	-2.54807639	-2.97691441
F552	COMB2	1.5	-32.9515915	-42.1660423	-2.02075791	13.29693413	-1.03250837	35.50180817
F552	COMB2	2.25	-32.9515915	-24.6166096	-2.02075791	13.29693413	0.483059615	60.27212906
F552	COMB2	3	-32.9515915	-11.4378014	-2.02075791	13.29693413	1.998627543	73.5193634
F552	COMB3	0	-81.2156067	-68.7319489	-2.47213626	14.42597008	-5.43526125	-38.6394997
F552	COMB3	0.75	-81.2156067	-55.5531425	-2.47213626	14.42597008	-3.58115935	8.240558624
F552	COMB3	1.5	-81.2156067	-38.0037079	-2.47213626	14.42597008	-1.72705793	43.59753036
F552	COMB3	2.25	-81.2156067	-20.454277	-2.47213626	14.42597008	0.12704365	65.24610138

F552	COMB3	3	-81.2156067	-7.27546787	-2.47213626	14.42597008	1.981145144	75.37158966
F553	D	0	-15.2702818	-76.5633316	-3.63395095	0.006588534	-7.32143784	-69.1626434
F553	D	0.75	-15.2702818	-69.8527069	-3.63395095	0.006588534	-4.59597492	-13.7890711
F553	D	1.5	-15.2702818	-55.6608315	-3.63395095	0.006588534	-1.87051272	33.74607086
F553	D	2.25	-15.2702818	-41.4689674	-3.63395095	0.006588534	0.854949474	69.70215607
F553	D	3	-15.2702818	-34.7583427	-3.63395095	0.006588534	3.580411911	97.81980896
F553	L	0	-5.24586868	-23.3046684	0.090725653	0.0218309	0.187448859	-22.1723824
F553	L	0.75	-5.24586868	-21.8984203	0.090725653	0.0218309	0.119404644	-5.04544735
F553	L	1.5	-5.24586868	-17.6796703	0.090725653	0.0218309	0.051360417	9.972113609
F553	L	2.25	-5.24586868	-13.4609232	0.090725653	0.0218309	-0.0166838	21.47405243
F553	L	3	-5.24586868	-12.0546732	0.090725653	0.0218309	-0.08472803	30.8666172
F553	EX	0	-0.228083	-0.02746428	1.44207108	-2.0183568	2.903264046	0.011097375
F553	EX	0.75	-0.228083	-0.02746428	1.44207108	-2.0183568	1.821711183	0.031695578
F553	EX	1.5	-0.228083	-0.02746428	1.44207108	-2.0183568	0.740158319	0.052293781
F553	EX	2.25	-0.228083	-0.02746428	1.44207108	-2.0183568	-0.3413946	0.07289198
F553	EX	3	-0.228083	-0.02746428	1.44207108	-2.0183568	-1.42294753	0.093490183
F553	EY	0	-65.6539841	6.169565678	-1.23424029	0.0075487	-2.56764317	20.30127144
F553	EY	0.75	-65.6539841	6.169565678	-1.23424029	0.0075487	-1.64196324	15.67409801
F553	EY	1.5	-65.6539841	6.169565678	-1.23424029	0.0075487	-0.71628338	11.0469265
F553	EY	2.25	-65.6539841	6.169565678	-1.23424029	0.0075487	0.209396616	6.419753075
F553	EY	3	-65.6539841	6.169565678	-1.23424029	0.0075487	1.135076523	1.792580247
F553	COMB1	0	-26.7177277	-129.163467	-4.21557999	0.042835679	-8.48580742	-118.470985
F553	COMB1	0.75	-26.7177277	-118.860718	-4.21557999	0.042835679	-5.32412243	-24.6196022
F553	COMB1	1.5	-26.7177277	-95.0804749	-4.21557999	0.042835679	-2.16243863	56.45066452
F553	COMB1	2.25	-26.7177277	-71.3002396	-4.21557999	0.042835679	0.999245286	118.0010681
F553	COMB1	3	-26.7177277	-60.9974861	-4.21557999	0.042835679	4.160929203	166.7703552
F553	COMB2	0	-38.6033173	-85.817482	-2.68331218	-2.07282686	-5.4323926	-73.1986923
F553	COMB2	0.75	-38.6033173	-78.3283539	-2.68331218	-2.07282686	-3.41990876	-11.0976954
F553	COMB2	1.5	-38.6033173	-62.0979843	-2.68331218	-2.07282686	-1.40742528	42.1084938
F553	COMB2	2.25	-38.6033173	-45.8676186	-2.68331218	-2.07282686	0.605058074	82.04925537
F553	COMB2	3	-38.6033173	-38.3784943	-2.68331218	-2.07282686	2.617541552	113.0952072
F553	COMB3	0	-86.6947708	-81.2630768	-4.62876987	-0.61406159	-9.40996075	-58.285244
F553	COMB3	0.75	-86.6947708	-73.7739487	-4.62876987	-0.61406159	-5.93838358	0.399946302
F553	COMB3	1.5	-86.6947708	-57.5435791	-4.62876987	-0.61406159	-2.4668076	50.19033432
F553	COMB3	2.25	-86.6947708	-41.3132133	-4.62876987	-0.61406159	1.004768729	86.71529388
F553	COMB3	3	-86.6947708	-33.8240891	-4.62876987	-0.61406159	4.476345062	114.3454437
F554	D	0	-14.1474638	-38.7200317	-2.61726975	-16.2706127	-5.86591578	-27.3592205
F554	D	0.75	-14.1474638	-33.8797226	-2.61726975	-16.2706127	-3.90296412	0.09946844
F554	D	1.5	-14.1474638	-25.29879	-2.61726975	-16.2706127	-1.94001245	22.52519226
F554	D	2.25	-14.1474638	-16.7178535	-2.61726975	-16.2706127	0.022939363	38.04764175
F554	D	3	-14.1474638	-11.8775434	-2.61726975	-16.2706127	1.985891104	48.53712082
F554	L	0	-3.67970252	-9.74682522	0.107588686	-5.33904028	0.175926685	-7.86647654
F554	L	0.75	-3.67970252	-9.11401367	0.107588686	-5.33904028	0.095235191	-0.71456295
F554	L	1.5	-3.67970252	-7.21557665	0.107588686	-5.33904028	0.014543707	5.488132954
F554	L	2.25	-3.67970252	-5.31714058	0.107588686	-5.33904028	-0.06614778	10.10879803
F554	L	3	-3.67970252	-4.68432808	0.107588686	-5.33904028	-0.14683928	13.78024673
F554	EX	0	-0.29930809	-0.7257852	1.141600013	-0.65371192	2.118690014	-1.37811303
F554	EX	0.75	-0.29930809	-0.7257852	1.141600013	-0.65371192	1.262490273	-0.83377427
F554	EX	1.5	-0.29930809	-0.7257852	1.141600013	-0.65371192	0.406290561	-0.28943551
F554	EX	2.25	-0.29930809	-0.7257852	1.141600013	-0.65371192	-0.44990921	0.254903227
F554	EX	3	-0.29930809	-0.7257852	1.141600013	-0.65371192	-1.30610895	0.79924196
F554	EY	0	-69.0847092	6.810153961	-0.8468774	0.012780256	-1.83874333	22.56040001
F554	EY	0.75	-69.0847092	6.810153961	-0.8468774	0.012780256	-1.20358539	17.45278549
F554	EY	1.5	-69.0847092	6.810153961	-0.8468774	0.012780256	-0.5684275	12.34517193
F554	EY	2.25	-69.0847092	6.810153961	-0.8468774	0.012780256	0.06673035	7.237558365
F554	EY	3	-69.0847092	6.810153961	-0.8468774	0.012780256	0.701888204	2.129944563
F554	COMB1	0	-22.864481	-62.05896	-2.96858168	-28.0672016	-6.75761604	-45.4174271
F554	COMB1	0.75	-22.864481	-55.2380905	-2.96858168	-28.0672016	-4.53118038	-1.02393854
F554	COMB1	1.5	-22.864481	-41.9034691	-2.96858168	-28.0672016	-2.30474496	35.81124496
F554	COMB1	2.25	-22.864481	-28.5688496	-2.96858168	-28.0672016	-0.07830922	61.83124542
F554	COMB1	3	-22.864481	-21.7479763	-2.96858168	-28.0672016	2.148126602	80.29293823
F554	COMB2	0	-38.0854111	-42.3322754	-1.79945314	-19.4385071	-4.49015474	-25.5249424
F554	COMB2	0.75	-38.0854111	-37.0506134	-1.79945314	-19.4385071	-3.14056516	4.514025688
F554	COMB2	1.5	-38.0854111	-27.442625	-1.79945314	-19.4385071	-1.79097569	28.96937752
F554	COMB2	2.25	-38.0854111	-17.8346348	-1.79945314	-19.4385071	-0.44138619	45.67795181
F554	COMB2	3	-38.0854111	-12.5529728	-1.79945314	-19.4385071	0.908203304	56.80290222
F554	COMB3	0	-88.647171	-36.804245	-3.24386001	-18.9584408	-7.36708784	-7.95080805
F554	COMB3	0.75	-88.647171	-31.5225849	-3.24386001	-18.9584408	-4.93419313	17.94214058
F554	COMB3	1.5	-88.647171	-21.9145966	-3.24386001	-18.9584408	-2.50129914	38.25147247
F554	COMB3	2.25	-88.647171	-12.3066063	-3.24386001	-18.9584408	-0.06840475	50.81402588
F554	COMB3	3	-88.647171	-7.02494478	-3.24386001	-18.9584408	2.364489555	57.79295731
F555	D	0	-14.1226759	-38.6718521	2.666856766	16.22374725	5.978195667	-27.2873669
F555	D	0.75	-14.1226759	-33.8315392	2.666856766	16.22374725	3.978053331	0.135186493
F555	D	1.5	-14.1226759	-25.2506065	2.666856766	16.22374725	1.977911592	22.52477455
F555	D	2.25	-14.1226759	-16.669672	2.666856766	16.22374725	-0.0222305	38.01108551
F555	D	3	-14.1226759	-11.829361	2.666856766	16.22374725	-2.02237248	48.46443176
F555	L	0	-3.90081453	-10.2788935	-0.04881849	5.582681179	-0.038737	-8.11182499
F555	L	0.75	-3.90081453	-9.57576752	-0.04881849	5.582681179	-0.00212314	-0.57843864
F555	L	1.5	-3.90081453	-7.46639395	-0.04881849	5.582681179	0.034490723	5.900260925
F555	L	2.25	-3.90081453	-5.35701942	-0.04881849	5.582681179	0.071104579	10.62114906
F555	L	3	-3.90081453	-4.6538949	-0.04881849	5.582681179	0.107718438	14.28735065
F555	EX	0	0.406797647	0.72022295	0.570505977	-0.64550585	1.454392672	1.366880059
F555	EX	0.75	0.406797647	0.72022295	0.570505977	-0.64550585	1.026513219	0.826713026
F555	EX	1.5	0.406797647	0.72022295	0.570505977	-0.64550585	0.598633945	0.286545962

F555	EX	2.25	0.406797647	0.72022295	0.570505977	-0.64550585	0.170754656	-0.25362104
F555	EX	3	0.406797647	0.72022295	0.570505977	-0.64550585	-0.25712466	-0.79378814
F555	EY	0	-69.0847015	6.810144901	0.846890807	-0.01278058	1.838777184	22.56036949
F555	EY	0.75	-69.0847015	6.810144901	0.846890807	-0.01278058	1.203609109	17.4527626
F555	EY	1.5	-69.0847015	6.810144901	0.846890807	-0.01278058	0.568441272	12.34515572
F555	EY	2.25	-69.0847015	6.810144901	0.846890807	-0.01278058	-0.0667266	7.237548828
F555	EY	3	-69.0847015	6.810144901	0.846890807	-0.01278058	-0.70189452	2.12994194
F555	COMB1	0	-23.1885147	-62.8524513	3.122118473	28.40078735	7.111855507	-45.7237587
F555	COMB1	0.75	-23.1885147	-55.9190788	3.122118473	28.40078735	4.77026701	-0.76327807
F555	COMB1	1.5	-23.1885147	-42.2469597	3.122118473	28.40078735	2.428678989	36.47014618
F555	COMB1	2.25	-23.1885147	-28.5748386	3.122118473	28.40078735	0.087090731	62.60713959
F555	COMB1	3	-23.1885147	-21.6414642	3.122118473	28.40078735	-2.25449753	81.01707458
F555	COMB2	0	-37.3982124	-40.9526672	3.642066002	18.12135506	8.349413872	-22.6857224
F555	COMB2	0.75	-37.3982124	-35.6488571	3.642066002	18.12135506	5.617865562	6.313005924
F555	COMB2	1.5	-37.3982124	-25.9744263	3.642066002	18.12135506	2.886316776	29.69489479
F555	COMB2	2.25	-37.3982124	-16.2999916	3.642066002	18.12135506	0.154768109	45.2746315
F555	COMB2	3	-37.3982124	-10.9961796	3.642066002	18.12135506	-2.57678056	55.23752975
F555	COMB3	0	-88.4683609	-36.4657707	3.853766441	18.57672501	8.653752327	-7.08800459
F555	COMB3	0.75	-88.4683609	-31.1619625	3.853766441	18.57672501	5.763428688	18.54555321
F555	COMB3	1.5	-88.4683609	-21.4875298	3.853766441	18.57672501	2.873104811	38.56227112
F555	COMB3	2.25	-88.4683609	-11.8130951	3.853766441	18.57672501	-0.0172193	50.7768364
F555	COMB3	3	-88.4683609	-6.50928354	3.853766441	18.57672501	-2.90754342	57.37456512
F556	D	0	-15.4029961	-76.6754074	3.701100826	0.219640717	7.460638523	-69.1334229
F556	D	0.75	-15.4029961	-69.9647903	3.701100826	0.219640717	4.684813976	-13.6757898
F556	D	1.5	-15.4029961	-55.7729225	3.701100826	0.219640717	1.908989072	33.94341278
F556	D	2.25	-15.4029961	-41.5810509	3.701100826	0.219640717	-0.86683583	69.98356628
F556	D	3	-15.4029961	-34.8704338	3.701100826	0.219640717	-3.64266062	98.18528748
F556	L	0	-6.96309805	-32.6058426	-0.01825487	0.21064195	-0.03765235	-29.0500889
F556	L	0.75	-6.96309805	-29.9339676	-0.01825487	0.21064195	-0.02396121	-5.26368237
F556	L	1.5	-6.96309805	-21.9183464	-0.01825487	0.21064195	-0.01027006	14.51491451
F556	L	2.25	-6.96309805	-13.9027233	-0.01825487	0.21064195	0.003421084	27.61382675
F556	L	3	-6.96309805	-11.2308493	-0.01825487	0.21064195	0.017112229	36.70492935
F556	EX	0	-0.05484974	0.025384504	1.512734652	-1.97821975	3.03445816	-0.01215308
F556	EX	0.75	-0.05484974	0.025384504	1.512734652	-1.97821975	1.899907589	-0.03119146
F556	EX	1.5	-0.05484974	0.025384504	1.512734652	-1.97821975	0.765357077	-0.05022983
F556	EX	2.25	-0.05484974	0.025384504	1.512734652	-1.97821975	-0.36919352	-0.0692682
F556	EX	3	-0.05484974	0.025384504	1.512734652	-1.97821975	-1.50374413	-0.08830658
F556	EY	0	-65.6539917	6.16956377	1.234236717	-0.00754878	2.567637205	20.30126762
F556	EY	0.75	-65.6539917	6.16956377	1.234236717	-0.00754878	1.641959906	15.67409515
F556	EY	1.5	-65.6539917	6.16956377	1.234236717	-0.00754878	0.716282547	11.04692268
F556	EY	2.25	-65.6539917	6.16956377	1.234236717	-0.00754878	-0.2093948	6.419751644
F556	EY	3	-65.6539917	6.16956377	1.234236717	-0.00754878	-1.13507211	1.792579651
F556	COMB1	0	-29.6245518	-144.17984	4.41211319	0.600596011	8.892522812	-129.440247
F556	COMB1	0.75	-29.6245518	-131.852097	4.41211319	0.600596011	5.583438396	-24.83284
F556	COMB1	1.5	-29.6245518	-101.996864	4.41211319	0.600596011	2.274354696	63.95595932
F556	COMB1	2.25	-29.6245518	-72.1416245	4.41211319	0.600596011	-1.03472924	128.1623993
F556	COMB1	3	-29.6245518	-59.8138771	4.41211319	0.600596011	-4.34381342	176.5502319
F556	COMB2	0	-39.1042976	-88.8103333	5.834870338	-1.75286031	11.77128029	-75.358551
F556	COMB2	0.75	-39.1042976	-80.9225464	5.834870338	-1.75286031	7.39512825	-11.1125832
F556	COMB2	1.5	-39.1042976	-63.4961624	5.834870338	-1.75286031	3.018976927	43.64057541
F556	COMB2	2.25	-39.1042976	-46.0697784	5.834870338	-1.75286031	-1.35717463	84.13162994
F556	COMB2	3	-39.1042976	-38.1819839	5.834870338	-1.75286031	-5.73332644	115.1298676
F556	COMB3	0	-87.320488	-84.2939835	5.65286541	-0.33409047	11.47368336	-60.4283714
F556	COMB3	0.75	-87.320488	-76.406189	5.65286541	-0.33409047	7.234035492	0.430334717
F556	COMB3	1.5	-87.320488	-58.9798088	5.65286541	-0.33409047	2.994387627	51.79623032
F556	COMB3	2.25	-87.320488	-41.5534248	5.65286541	-0.33409047	-1.24526048	88.90001678
F556	COMB3	3	-87.320488	-33.6656342	5.65286541	-0.33409047	-5.48490858	116.510994
F557	D	0	-13.060504	-82.3643265	2.172426224	-12.3956289	4.895327091	-64.6902237
F557	D	0.75	-13.060504	-68.1537094	2.172426224	-12.3956289	3.266008377	-7.77839899
F557	D	1.5	-13.060504	-46.4618416	2.172426224	-12.3956289	1.636689186	35.66999817
F557	D	2.25	-13.060504	-24.7699776	2.172426224	-12.3956289	0.007370135	61.9143486
F557	D	3	-13.060504	-10.5593557	2.172426224	-12.3956289	-1.62194896	74.69525909
F557	L	0	-5.20700216	-25.0249748	0.029200876	-4.73344707	0.009144313	-20.206461
F557	L	0.75	-5.20700216	-22.3530998	0.029200876	-4.73344707	-0.01275634	-2.10570407
F557	L	1.5	-5.20700216	-14.3374777	0.029200876	-4.73344707	-0.03465699	11.98724174
F557	L	2.25	-5.20700216	-6.32185507	0.029200876	-4.73344707	-0.05655764	19.40050507
F557	L	3	-5.20700216	-3.64998102	0.029200876	-4.73344707	-0.07845829	22.8059597
F557	EX	0	0.38822484	-0.51486528	0.905262589	-1.5384227	1.84029901	-0.73808521
F557	EX	0.75	0.38822484	-0.51486528	0.905262589	-1.5384227	1.161352277	-0.35193634
F557	EX	1.5	0.38822484	-0.51486528	0.905262589	-1.5384227	0.482405603	0.034212492
F557	EX	2.25	0.38822484	-0.51486528	0.905262589	-1.5384227	-0.1965411	0.42036137
F557	EX	3	0.38822484	-0.51486528	0.905262589	-1.5384227	-0.87548786	0.80651021
F557	EY	0	-65.8735809	6.174390793	0.318974644	-0.00427494	0.750722468	20.24254036
F557	EY	0.75	-65.8735809	6.174390793	0.318974644	-0.00427494	0.511491597	15.61174774
F557	EY	1.5	-65.8735809	6.174390793	0.318974644	-0.00427494	0.272260666	10.98095703
F557	EY	2.25	-65.8735809	6.174390793	0.318974644	-0.00427494	0.033029765	6.350165367
F557	EY	3	-65.8735809	6.174390793	0.318974644	-0.00427494	-0.20620114	1.719373584
F557	COMB1	0	-24.003809	-138.877151	2.653632879	-22.4482708	5.889023781	-109.958611
F557	COMB1	0.75	-24.003809	-117.549408	2.653632879	-22.4482708	3.898799896	-12.7032061
F557	COMB1	1.5	-24.003809	-78.6941757	2.653632879	-22.4482708	1.908575892	61.98358536
F557	COMB1	2.25	-24.003809	-39.8389397	2.653632879	-22.4482708	-0.08164805	105.338028
F557	COMB1	3	-24.003809	-18.5111961	2.653632879	-22.4482708	-2.071872	126.123848
F557	COMB2	0	-35.7021027	-92.9533615	3.327669621	-16.1000595	7.284161091	-68.6772919
F557	COMB2	0.75	-35.7021027	-77.1905746	3.327669621	-16.1000595	4.788410187	-4.2771697

F557	COMB2	1.5	-35.7021027	-51.8891945	3.327669621	-16.1000595	2.292658567	44.7238884
F557	COMB2	2.25	-35.7021027	-26.5878124	3.327669621	-16.1000595	-0.20309268	73.55660248
F557	COMB2	3	-35.7021027	-10.8250198	3.327669621	-16.1000595	-2.69884396	86.990242
F557	COMB3	0	-84.3987045	-88.0444794	2.910326719	-14.9955378	6.510926723	-53.2676048
F557	COMB3	0.75	-84.3987045	-72.2816925	2.910326719	-14.9955378	4.328182697	7.45085907
F557	COMB3	1.5	-84.3987045	-46.9803123	2.910326719	-14.9955378	2.145438194	52.77025986
F557	COMB3	2.25	-84.3987045	-21.6789322	2.910326719	-14.9955378	-0.0373062	77.92131042
F557	COMB3	3	-84.3987045	-5.91614008	2.910326719	-14.9955378	-2.22005057	87.67329407
F558	D	0	0.342003673	-36.0712662	1.347386479	0.032897085	3.406018496	-26.2064266
F558	D	1.25	0.342003673	-23.430645	1.347386479	0.032897085	1.721785307	13.14698219
F558	D	2.5	0.342003673	3.341226339	1.347386479	0.032897085	0.037552055	25.92799759
F558	D	3.75	0.342003673	30.11309624	1.347386479	0.032897085	-1.64668119	4.793916225
F558	D	5	0.342003673	42.75371933	1.347386479	0.032897085	-3.33091426	-42.9125557
F558	L	0	-0.13714573	-11.9612932	-0.04759832	-0.01741225	-0.12206641	-8.7201643
F558	L	1.25	-0.13714573	-8.05504227	-0.04759832	-0.01741225	-0.0625685	4.603847027
F558	L	2.5	-0.13714573	1.163707972	-0.04759832	-0.01741225	-0.0030706	8.995566368
F558	L	3.75	-0.13714573	10.38245773	-0.04759832	-0.01741225	0.0564273	1.694576502
F558	L	5	-0.13714573	14.28870869	-0.04759832	-0.01741225	0.115925208	-14.5387058
F558	EX	0	-0.97516608	0.990048945	-0.50523436	0.000309503	-1.26072049	2.992306709
F558	EX	1.25	-0.97516608	0.990048945	-0.50523436	0.000309503	-0.62917757	1.754745722
F558	EX	2.5	-0.97516608	0.990048945	-0.50523436	0.000309503	0.002365381	0.517184436
F558	EX	3.75	-0.97516608	0.990048945	-0.50523436	0.000309503	0.633908331	-0.72037673
F558	EX	5	-0.97516608	0.990048945	-0.50523436	0.000309503	1.265451312	-1.95793808
F558	EY	0	0.116166957	0.008896081	0.309382975	0.001480526	0.775934994	0.00851369
F558	EY	1.25	0.116166957	0.008896081	0.309382975	0.001480526	0.38920629	-0.00260641
F558	EY	2.5	0.116166957	0.008896081	0.309382975	0.001480526	0.002477533	-0.01372651
F558	EY	3.75	0.116166957	0.008896081	0.309382975	0.001480526	-0.38425121	-0.02484662
F558	EY	5	0.116166957	0.008896081	0.309382975	0.001480526	-0.77097994	-0.03596672
F558	COMB1	0	0.190971226	-62.4235878	1.540706515	0.011616897	3.891916037	-45.3999748
F558	COMB1	1.25	0.190971226	-41.0048409	1.540706515	0.011616897	1.966032743	23.14253426
F558	COMB1	2.5	0.190971226	5.871404171	1.540706515	0.011616897	0.040149502	45.50650406
F558	COMB1	3.75	0.190971226	52.74765015	1.540706515	0.011616897	-1.88573372	8.464021683
F558	COMB1	5	0.190971226	74.16639709	1.540706515	0.011616897	-3.8116169	-74.7569962
F558	COMB2	0	-0.65680134	-40.6151314	0.974300504	0.029843781	2.477442265	-27.1638794
F558	COMB2	1.25	-0.65680134	-26.112011	0.974300504	0.029843781	1.259566665	17.06988335
F558	COMB2	2.5	-0.65680134	4.902358532	0.974300504	0.029843781	0.041691009	30.58896255
F558	COMB2	3.75	-0.65680134	35.91672897	0.974300504	0.029843781	-1.17618465	4.813986778
F558	COMB2	5	-0.65680134	50.41985321	0.974300504	0.029843781	-2.39406013	-51.6756744
F558	COMB3	0	0.130700946	-41.3214302	1.565465689	0.030709125	3.955473423	-29.3120842
F558	COMB3	1.25	0.130700946	-26.8183079	1.565465689	0.030709125	1.998641133	15.80455112
F558	COMB3	2.5	0.130700946	4.196062088	1.565465689	0.030709125	0.041808922	30.20650101
F558	COMB3	3.75	0.130700946	35.21043396	1.565465689	0.030709125	-1.91502321	5.314395905
F558	COMB3	5	0.130700946	49.71355438	1.565465689	0.030709125	-3.87185526	-50.2923927
F559	D	0	0.148071095	-43.0882607	1.404401183	0.096108139	3.438599825	-43.5547333
F559	D	1.25	0.148071095	-30.4476395	1.404401183	0.096108139	1.683098197	4.569917202
F559	D	2.5	0.148071095	-3.67577004	1.404401183	0.096108139	-0.07240325	26.12217903
F559	D	3.75	0.148071095	23.09609985	1.404401183	0.096108139	-1.82790482	13.75934219
F559	D	5	0.148071095	35.73672104	1.404401183	0.096108139	-3.58340621	-25.1758862
F559	L	0	-0.14525022	-14.2569475	-0.02833315	0.023477465	-0.07234254	-14.4743528
F559	L	1.25	-0.14525022	-10.3506985	-0.02833315	0.023477465	-0.03692611	1.719228506
F559	L	2.5	-0.14525022	-1.13194788	-0.02833315	0.023477465	-0.00150967	8.980518341
F559	L	3.75	-0.14525022	8.086802483	-0.02833315	0.023477465	0.033906769	4.549098492
F559	L	5	-0.14525022	11.99305248	-0.02833315	0.023477465	0.069323212	-8.8146143
F559	EX	0	-0.71146184	0.870665431	-0.53604704	-0.02439371	-1.31396663	1.885390997
F559	EX	1.25	-0.71146184	0.870665431	-0.53604704	-0.02439371	-0.64390773	0.797059238
F559	EX	2.5	-0.71146184	0.870665431	-0.53604704	-0.02439371	0.026151117	-0.29127258
F559	EX	3.75	-0.71146184	0.870665431	-0.53604704	-0.02439371	0.696209967	-1.37960434
F559	EX	5	-0.71146184	0.870665431	-0.53604704	-0.02439371	1.366268754	-2.46793628
F559	EY	0	-0.00516947	-0.02876303	0.654385567	0.025884219	1.629544258	-0.07874274
F559	EY	1.25	-0.00516947	-0.02876303	0.654385567	0.025884219	0.81156224	-0.04278895
F559	EY	2.5	-0.00516947	-0.02876303	0.654385567	0.025884219	-0.00641974	-0.00683515
F559	EY	3.75	-0.00516947	-0.02876303	0.654385567	0.025884219	-0.82440174	0.02911864
F559	EY	5	-0.00516947	-0.02876303	0.654385567	0.025884219	-1.64238369	0.065072432
F559	COMB1	0	-0.05471503	-74.5170288	1.639948487	0.152893707	4.01057148	-75.4246445
F559	COMB1	1.25	-0.05471503	-53.0982857	1.639948487	0.152893707	1.960636139	8.234665871
F559	COMB1	2.5	-0.05471503	-6.22204065	1.639948487	0.152893707	-0.08929937	45.71544266
F559	COMB1	3.75	-0.05471503	40.65420151	1.639948487	0.152893707	-2.13923502	23.78976822
F559	COMB1	5	-0.05471503	62.07294846	1.639948487	0.152893707	-4.18917036	-44.3144455
F559	COMB2	0	-0.62827057	-48.8415337	1.117019057	0.091214985	2.74109292	-48.3653183
F559	COMB2	1.25	-0.62827057	-34.3384132	1.117019057	0.091214985	1.34481895	6.151447773
F559	COMB2	2.5	-0.62827057	-3.32404375	1.117019057	0.091214985	-0.05145477	29.95353127
F559	COMB2	3.75	-0.62827057	27.69032478	1.117019057	0.091214985	-1.44772875	14.46155739
F559	COMB2	5	-0.62827057	42.19344711	1.117019057	0.091214985	-2.84400225	-31.7451
F559	COMB3	0	-0.11981759	-49.4895554	1.983946323	0.127803355	4.884863853	-49.780674
F559	COMB3	1.25	-0.11981759	-34.9864349	1.983946323	0.127803355	2.40493083	5.546114922
F559	COMB3	2.5	-0.11981759	-3.97206378	1.983946323	0.127803355	-0.07500207	30.15822411
F559	COMB3	3.75	-0.11981759	27.04230499	1.983946323	0.127803355	-2.55493522	15.47627449
F559	COMB3	5	-0.11981759	41.54542542	1.983946323	0.127803355	-5.03486776	-29.9203568
F560	D	0	0.162220135	-35.6469917	-1.42879105	-0.09662212	-3.64541745	-25.0530224
F560	D	1.25	0.162220135	-23.0063686	-1.42879105	-0.09662212	-1.85942864	13.77004147
F560	D	2.5	0.162220135	3.765501022	-1.42879105	-0.09662212	-0.07343972	26.02071571
F560	D	3.75	0.162220135	30.53736877	-1.42879105	-0.09662212	1.71254921	4.35628891
F560	D	5	0.162220135	43.17799377	-1.42879105	-0.09662212	3.498538017	-43.8805275
F560	L	0	-0.13582037	-12.1218424	-0.0023182	-0.02802478	-0.00875094	-9.14096832

F560	L	1.25	-0.13582037	-8.21559143	-0.0023182	-0.02802478	-0.00585319	4.383730412
F560	L	2.5	-0.13582037	1.003158212	-0.0023182	-0.02802478	-0.00295544	8.976136208
F560	L	3.75	-0.13582037	10.22190857	-0.0023182	-0.02802478	-5.7684E-05	1.875834584
F560	L	5	-0.13582037	14.12815952	-0.0023182	-0.02802478	0.002840069	-14.1567602
F560	EX	0	-0.54608542	0.864632308	-0.54124749	-0.02422411	-1.36835897	2.45885396
F560	EX	1.25	-0.54608542	0.864632308	-0.54124749	-0.02422411	-0.69179964	1.37806344
F560	EX	2.5	-0.54608542	0.864632308	-0.54124749	-0.02422411	-0.01524023	0.29727304
F560	EX	3.75	-0.54608542	0.864632308	-0.54124749	-0.02422411	0.661319137	-0.78351742
F560	EX	5	-0.54608542	0.864632308	-0.54124749	-0.02422411	1.337878585	-1.86430776
F560	EY	0	-0.00515711	0.028763041	-0.65438741	-0.02588413	-1.64238894	0.065072469
F560	EY	1.25	-0.00515711	0.028763041	-0.65438741	-0.02588413	-0.82440454	0.029118668
F560	EY	2.5	-0.00515711	0.028763041	-0.65438741	-0.02588413	-0.00642026	-0.00683514
F560	EY	3.75	-0.00515711	0.028763041	-0.65438741	-0.02588413	0.811564088	-0.04278894
F560	EY	5	-0.00515711	0.028763041	-0.65438741	-0.02588413	1.629548311	-0.07874274
F560	COMB1	0	-0.02264841	-62.1713371	-1.7182585	-0.1607862	-4.3885026	-44.6891785
F560	COMB1	1.25	-0.02264841	-40.7525902	-1.7182585	-0.1607862	-2.2406795	23.53801918
F560	COMB1	2.5	-0.02264841	6.123654366	-1.7182585	-0.1607862	-0.09285636	45.58667755
F560	COMB1	3.75	-0.02264841	52.999897	-1.7182585	-0.1607862	2.054966688	8.228881836
F560	COMB1	5	-0.02264841	74.41864777	-1.7182585	-0.1607862	4.202789783	-75.3074493
F560	COMB2	0	-0.43927515	-40.3437653	-2.26728415	-0.14350648	-5.76404905	-26.6196671
F560	COMB2	1.25	-0.43927515	-25.8406448	-2.26728415	-0.14350648	-2.9299438	17.27488708
F560	COMB2	2.5	-0.43927515	5.173725605	-2.26728415	-0.14350648	-0.09583868	30.4547596
F560	COMB2	3.75	-0.43927515	36.18809509	-2.26728415	-0.14350648	2.738266468	4.340572357
F560	COMB2	5	-0.43927515	50.69121933	-2.26728415	-0.14350648	5.572371483	-52.4882965
F560	COMB3	0	-0.04988414	-40.9451599	-2.35856056	-0.14508997	-5.98598623	-28.3422146
F560	COMB3	1.25	-0.04988414	-26.4420395	-2.35856056	-0.14508997	-3.03778553	16.30408287
F560	COMB3	2.5	-0.04988414	4.572331429	-2.35856056	-0.14508997	-0.08958461	30.2356987
F560	COMB3	3.75	-0.04988414	35.58670044	-2.35856056	-0.14508997	2.858616352	4.873255253
F560	COMB3	5	-0.04988414	50.08982468	-2.35856056	-0.14508997	5.806817055	-51.2038727
F561	D	0	0.353459001	-43.0006561	-1.37828875	-0.03854456	-3.40722752	-43.585041
F561	D	1.25	0.353459001	-30.360033	-1.37828875	-0.03854456	-1.68436658	4.430100918
F561	D	2.5	0.353459001	-3.58816195	-1.37828875	-0.03854456	0.038494412	25.87285233
F561	D	3.75	0.353459001	23.18370819	-1.37828875	-0.03854456	1.761355281	13.40050697
F561	D	5	0.353459001	35.82432938	-1.37828875	-0.03854456	3.484216213	-25.6442318
F561	L	0	-0.13009565	-14.3242054	0.019090727	0.015190791	0.045461841	-14.5873327
F561	L	1.25	-0.13009565	-10.4179544	0.019090727	0.015190791	0.02159843	1.690319777
F561	L	2.5	-0.13009565	-1.19920409	0.019090727	0.015190791	-0.00226498	9.035679817
F561	L	3.75	-0.13009565	8.019545555	0.019090727	0.015190791	-0.02612839	4.688330173
F561	L	5	-0.13009565	11.92579651	0.019090727	0.015190791	-0.04999181	-8.59131145
F561	EX	0	-0.2423774	0.976978779	-0.53316897	0.000107358	-1.32482946	1.927712917
F561	EX	1.25	-0.2423774	0.976978779	-0.53316897	0.000107358	-0.65836823	0.706489384
F561	EX	2.5	-0.2423774	0.976978779	-0.53316897	0.000107358	0.008093017	-0.51473415
F561	EX	3.75	-0.2423774	0.976978779	-0.53316897	0.000107358	0.674554288	-1.73595774
F561	EX	5	-0.2423774	0.976978779	-0.53316897	0.000107358	1.341015458	-2.95718122
F561	EY	0	0.11617133	-0.00889609	-0.30938259	-0.00148047	-0.77097887	-0.03596677
F561	EY	1.25	0.11617133	-0.00889609	-0.30938259	-0.00148047	-0.38425061	-0.02484666
F561	EY	2.5	0.11617133	-0.00889609	-0.30938259	-0.00148047	0.00247764	-0.01372655
F561	EY	3.75	0.11617133	-0.00889609	-0.30938259	-0.00148047	0.389205873	-0.00260643
F561	EY	5	0.11617133	-0.00889609	-0.30938259	-0.00148047	0.77593416	0.008513681
F561	COMB1	0	0.215997785	-74.519516	-1.6234014	-0.0219482	-4.01593399	-75.6417847
F561	COMB1	1.25	0.215997785	-53.1007652	-1.6234014	-0.0219482	-1.98668242	8.020632744
F561	COMB1	2.5	0.215997785	-6.22452068	-1.6234014	-0.0219482	0.042569324	45.50450897
F561	COMB1	3.75	0.215997785	40.65172195	-1.6234014	-0.0219482	2.071820974	23.58193588
F561	COMB1	5	0.215997785	62.0704689	-1.6234014	-0.0219482	4.101072788	-44.5191765
F561	COMB2	0	0.115885191	-48.6544418	-2.09047508	-0.03604192	-5.17732525	-48.3754501
F561	COMB2	1.25	0.115885191	-34.1513176	-2.09047508	-0.03604192	-2.5642314	5.907446384
F561	COMB2	2.5	0.115885191	-3.13694859	-2.09047508	-0.03604192	0.048862394	29.47566032
F561	COMB2	3.75	0.115885191	27.87742233	-2.09047508	-0.03604192	2.661956072	13.7498188
F561	COMB2	5	0.115885191	42.38054276	-2.09047508	-0.03604192	5.275050163	-32.6907082
F561	COMB3	0	0.375782847	-49.3644066	-1.93398964	-0.03720736	-4.79011726	-49.7898407
F561	COMB3	1.25	0.375782847	-34.8612823	-1.93398964	-0.03720736	-2.3726306	5.380511761
F561	COMB3	2.5	0.375782847	-3.84691191	-1.93398964	-0.03720736	0.044856489	29.83617973
F561	COMB3	3.75	0.375782847	27.16745758	-1.93398964	-0.03720736	2.462343454	14.9977932
F561	COMB3	5	0.375782847	41.670578	-1.93398964	-0.03720736	4.87983036	-30.5552788
F562	D	0	-9.29135227	24.27477837	-2.47162914	-13.4527559	-1.81063676	66.18427277
F562	D	0.75	-9.29135227	36.61509705	-2.47162914	-13.4527559	0.04308594	43.58434677
F562	D	1.5	-9.29135227	52.69604111	-2.47162914	-13.4527559	1.896808624	10.32644081
F562	D	2.25	-9.29135227	68.7769928	-2.47162914	-13.4527559	3.750531197	-35.4597588
F562	D	3	-9.29135227	81.11730957	-2.47162914	-13.4527559	5.604254246	-91.9039383
F562	L	0	-2.62124014	7.082897186	0.149811402	-3.88617396	0.171342239	13.65450001
F562	L	0.75	-2.62124014	7.786022186	0.149811402	-3.88617396	0.058983617	8.166543007
F562	L	1.5	-2.62124014	9.89539814	0.149811402	-3.88617396	-0.053375	1.623897433
F562	L	2.25	-2.62124014	12.00477505	0.149811402	-3.88617396	-0.16573362	-6.67656231
F562	L	3	-2.62124014	12.70790005	0.149811402	-3.88617396	-0.27809224	-16.0317116
F562	EX	0	-0.71783209	-0.46804544	1.276457548	1.428565502	1.495503187	-0.81765133
F562	EX	0.75	-0.71783209	-0.46804544	1.276457548	1.428565502	0.53815949	-0.46661705
F562	EX	1.5	-0.71783209	-0.46804544	1.276457548	1.428565502	-0.41918421	-0.11558278
F562	EX	2.25	-0.71783209	-0.46804544	1.276457548	1.428565502	-1.37652802	0.235451505
F562	EX	3	-0.71783209	-0.46804544	1.276457548	1.428565502	-2.33387184	0.586485744
F562	EY	0	-65.5642014	6.165493011	-0.43514422	0.012788271	-0.56972927	1.717892647
F562	EY	0.75	-65.5642014	6.165493011	-0.43514422	0.012788271	-0.24337097	-2.9062295
F562	EY	1.5	-65.5642014	6.165493011	-0.43514422	0.012788271	0.082987383	-7.53035164
F562	EY	2.25	-65.5642014	6.165493011	-0.43514422	0.012788271	0.409345716	-12.1544743
F562	EY	3	-65.5642014	6.165493011	-0.43514422	0.012788271	0.735704064	-16.7785969

F562	COMB1	0	-15.3436069	40.46236801	-2.72625661	-22.3611851	-1.89861655	101.2683334
F562	COMB1	0.75	-15.3436069	56.39575195	-2.72625661	-22.3611851	0.146076918	65.36768341
F562	COMB1	1.5	-15.3436069	79.06788635	-2.72625661	-22.3611851	2.190770388	14.98996544
F562	COMB1	2.25	-15.3436069	101.7400284	-2.72625661	-22.3611851	4.235463619	-53.234211
F562	COMB1	3	-15.3436069	117.6734161	-2.72625661	-22.3611851	6.280157566	-135.935471
F562	COMB2	0	-31.9772911	29.17733192	-1.36395681	-13.8669443	-0.47881466	73.48952484
F562	COMB2	0.75	-31.9772911	42.35615158	-1.36395681	-13.8669443	0.544153333	46.93761444
F562	COMB2	1.5	-31.9772911	59.90559769	-1.36395681	-13.8669443	1.567121387	8.862602234
F562	COMB2	2.25	-31.9772911	77.45504761	-1.36395681	-13.8669443	2.590089083	-42.9208298
F562	COMB2	3	-31.9772911	90.63386536	-1.36395681	-13.8669443	3.613057375	-106.227371
F562	COMB3	0	-79.6501389	34.04596329	-2.60283732	-14.8861122	-1.97432804	75.34088135
F562	COMB3	0.75	-79.6501389	47.22478104	-2.60283732	-14.8861122	-0.02219919	45.13750076
F562	COMB3	1.5	-79.6501389	64.77423096	-2.60283732	-14.8861122	1.929929733	3.411013126
F562	COMB3	2.25	-79.6501389	82.32367706	-2.60283732	-14.8861122	3.882058382	-52.0238914
F562	COMB3	3	-79.6501389	95.50249481	-2.60283732	-14.8861122	5.834187508	-118.981911
F563	D	0	-15.2132673	51.08363724	-3.44001842	-0.63558996	-3.18910217	97.75659943
F563	D	0.75	-15.2132673	57.79426956	-3.44001842	-0.63558996	-0.60908723	57.39493942
F563	D	1.5	-15.2132673	71.98614502	-3.44001842	-0.63558996	1.970927835	9.194835663
F563	D	2.25	-15.2132673	86.17803192	-3.44001842	-0.63558996	4.550942898	-50.584343
F563	D	3	-15.2132673	92.88866425	-3.44001842	-0.63558996	7.13095808	-118.201958
F563	L	0	-5.22660351	16.49098396	0.098830134	0.086183175	0.10353972	30.82572746
F563	L	0.75	-5.22660351	17.89723396	0.098830134	0.086183175	0.029417077	18.10592079
F563	L	1.5	-5.22660351	22.11598587	0.098830134	0.086183175	-0.04470557	3.276735306
F563	L	2.25	-5.22660351	26.33473969	0.098830134	0.086183175	-0.1188282	-15.068079
F563	L	3	-5.22660351	27.74098969	0.098830134	0.086183175	-0.19295084	-35.5222664
F563	EX	0	-0.2588957	0.091919206	1.17836678	1.824972153	1.156470418	0.118193388
F563	EX	0.75	-0.2588957	0.091919206	1.17836678	1.824972153	0.272694767	0.049253952
F563	EX	1.5	-0.2588957	0.091919206	1.17836678	1.824972153	-0.61108077	-0.0196855
F563	EX	2.25	-0.2588957	0.091919206	1.17836678	1.824972153	-1.49485636	-0.08862494
F563	EX	3	-0.2588957	0.091919206	1.17836678	1.824972153	-2.37863207	-0.15756439
F563	EY	0	-65.3089828	6.207224846	-1.11290395	-0.03522732	-1.26544762	1.768176556
F563	EY	0.75	-65.3089828	6.207224846	-1.11290395	-0.03522732	-0.43076921	-2.8872447
F563	EY	1.5	-65.3089828	6.207224846	-1.11290395	-0.03522732	0.403909206	-7.54266548
F563	EY	2.25	-65.3089828	6.207224846	-1.11290395	-0.03522732	1.238587499	-12.1980867
F563	EY	3	-65.3089828	6.207224846	-1.11290395	-0.03522732	2.073266029	-16.853508
F563	COMB1	0	-26.6184864	87.68593597	-3.96989393	-0.62481481	-3.66125917	166.6290894
F563	COMB1	0.75	-26.6184864	97.98869324	-3.96989393	-0.62481481	-0.68383735	97.84339905
F563	COMB1	1.5	-26.6184864	121.7689514	-3.96989393	-0.62481481	2.293584585	16.2765789
F563	COMB1	2.25	-26.6184864	145.5492249	-3.96989393	-0.62481481	5.271006584	-84.8101349
F563	COMB1	3	-26.6184864	155.8519745	-3.96989393	-0.62481481	8.248428345	-198.677979
F563	COMB2	0	-38.460598	60.88288879	-2.71184301	1.237527847	-2.5176115	113.033844
F563	COMB2	0.75	-38.460598	68.37202454	-2.71184301	1.237527847	-0.48372844	65.10955048
F563	COMB2	1.5	-38.460598	84.60240173	-2.71184301	1.237527847	1.550154686	8.290435791
F563	COMB2	2.25	-38.460598	100.8327866	-2.71184301	1.237527847	3.584038019	-61.7941284
F563	COMB2	3	-38.460598	108.3219223	-2.71184301	1.237527847	5.617921352	-140.773514
F563	COMB3	0	-86.2762985	65.37902069	-4.37825155	-0.10234421	-4.28037405	114.2483521
F563	COMB3	0.75	-86.2762985	72.8681488	-4.37825155	-0.10234421	-0.99668407	62.95196152
F563	COMB3	1.5	-86.2762985	89.09853363	-4.37825155	-0.10234421	2.28700614	2.760749817
F563	COMB3	2.25	-86.2762985	105.3289185	-4.37825155	-0.10234421	5.570696354	-70.6959076
F563	COMB3	3	-86.2762985	112.8180466	-4.37825155	-0.10234421	8.85438633	-153.047394
F564	D	0	-15.5518656	23.85917854	-2.4691987	8.90527153	-1.59751523	48.6332283
F564	D	0.75	-15.5518656	28.69949341	-2.4691987	8.90527153	0.254384726	29.15750504
F564	D	1.5	-15.5518656	37.28043747	-2.4691987	8.90527153	2.106284618	4.648808002
F564	D	2.25	-15.5518656	45.86137772	-2.4691987	8.90527153	3.958184719	-26.7631779
F564	D	3	-15.5518656	50.70169449	-2.4691987	8.90527153	5.810084343	-63.2081337
F564	L	0	-3.65136957	7.30872488	-0.03766153	3.475572824	-0.07751606	13.80372429
F564	L	0.75	-3.65136957	7.941536903	-0.03766153	3.475572824	-0.0492699	8.163974762
F564	L	1.5	-3.65136957	9.839975357	-0.03766153	3.475572824	-0.02102375	1.57500577
F564	L	2.25	-3.65136957	11.73841286	-0.03766153	3.475572824	0.007222413	-6.5959959
F564	L	3	-3.65136957	12.37122631	-0.03766153	3.475572824	0.035468571	-15.716218
F564	EX	0	0.23673895	0.144880235	0.43013823	1.814224243	0.060159825	0.774848223
F564	EX	0.75	0.23673895	0.144880235	0.43013823	1.814224243	-0.26244399	0.666188002
F564	EX	1.5	0.23673895	0.144880235	0.43013823	1.814224243	-0.58504784	0.557527781
F564	EX	2.25	0.23673895	0.144880235	0.43013823	1.814224243	-0.9076516	0.44886753
F564	EX	3	0.23673895	0.144880235	0.43013823	1.814224243	-1.23025548	0.340207309
F564	EY	0	-69.73909	6.781390667	-0.85204685	-0.05229218	-0.94049555	2.155828953
F564	EY	0.75	-69.73909	6.781390667	-0.85204685	-0.05229218	-0.30146	-2.93021703
F564	EY	1.5	-69.73909	6.781390667	-0.85204685	-0.05229218	0.337575495	-8.01626301
F564	EY	2.25	-69.73909	6.781390667	-0.85204685	-0.05229218	0.976611018	-13.1023092
F564	EY	3	-69.73909	6.781390667	-0.85204685	-0.05229218	1.615646482	-18.1883545
F564	COMB1	0	-24.5044308	40.32497406	-3.02329683	16.24724197	-2.041044	80.4458313
F564	COMB1	0.75	-24.5044308	47.14585114	-3.02329683	16.24724197	0.226429835	48.0513649
F564	COMB1	1.5	-24.5044308	60.48048401	-3.02329683	16.24724197	2.493903637	8.098579407
F564	COMB1	2.25	-24.5044308	73.81511688	-3.02329683	16.24724197	4.761377335	-42.6694069
F564	COMB1	3	-24.5044308	80.63599396	-3.02329683	16.24724197	7.028851032	-100.995712
F564	COMB2	0	-39.2024307	29.64047432	-2.42772365	12.30659103	-1.93579924	56.89411926
F564	COMB2	0.75	-39.2024307	34.92214203	-2.42772365	12.30659103	-0.11500549	32.95351791
F564	COMB2	1.5	-39.2024307	44.53013992	-2.42772365	12.30659103	1.705788255	3.429293871
F564	COMB2	2.25	-39.2024307	54.13813782	-2.42772365	12.30659103	3.526582003	-33.8417244
F564	COMB2	3	-39.2024307	59.41980362	-2.42772365	12.30659103	5.347375393	-76.6963654
F564	COMB3	0	-90.6311111	34.52048492	-3.3636775	10.96191502	-2.67037845	57.92076111
F564	COMB3	0.75	-90.6311111	39.80215073	-3.3636775	10.96191502	-0.14761892	30.32015419
F564	COMB3	1.5	-90.6311111	49.41014862	-3.3636775	10.96191502	2.375140667	-2.86407924
F564	COMB3	2.25	-90.6311111	59.01814651	-3.3636775	10.96191502	4.897900105	-43.7951088

F564	COMB3	3	-90.6311111	64.29981232	-3.3636775	10.96191502	7.420659542	-90.3097534
F565	D	0	-15.5514669	23.81763077	2.504636765	-8.82927608	1.623044968	48.56105042
F565	D	0.75	-15.5514669	28.65794373	2.504636765	-8.82927608	-0.25543365	29.11649132
F565	D	1.5	-15.5514669	37.23888779	2.504636765	-8.82927608	-2.13391232	4.638953686
F565	D	2.25	-15.5514669	45.81982803	2.504636765	-8.82927608	-4.01239109	-26.741869
F565	D	3	-15.5514669	50.66014099	2.504636765	-8.82927608	-5.89086962	-63.1556702
F565	L	0	-3.90313292	7.467947006	0.087001868	-3.55828738	0.116469376	14.31537533
F565	L	0.75	-3.90313292	8.17107296	0.087001868	-3.55828738	0.051217947	8.538629532
F565	L	1.5	-3.90313292	10.28044891	0.087001868	-3.55828738	-0.01403349	1.707196474
F565	L	2.25	-3.90313292	12.38982487	0.087001868	-3.55828738	-0.07928493	-6.88205147
F565	L	3	-3.90313292	13.09294987	0.087001868	-3.55828738	-0.14453638	-16.5259876
F565	EX	0	-0.13444984	-0.14440939	1.116591334	1.813347936	1.111234188	-0.76956397
F565	EX	0.75	-0.13444984	-0.14440939	1.116591334	1.813347936	0.27379033	-0.66125685
F565	EX	1.5	-0.13444984	-0.14440939	1.116591334	1.813347936	-0.56365365	-0.55294973
F565	EX	2.25	-0.13444984	-0.14440939	1.116591334	1.813347936	-1.40109766	-0.44464266
F565	EX	3	-0.13444984	-0.14440939	1.116591334	1.813347936	-2.2385416	-0.33633554
F565	EY	0	-69.73909	6.78138113	0.85204792	0.052291885	0.940494478	2.155826092
F565	EY	0.75	-69.73909	6.78138113	0.85204792	0.052291885	0.30145818	-2.93021274
F565	EY	1.5	-69.73909	6.78138113	0.85204792	0.052291885	-0.33757809	-8.01625156
F565	EY	2.25	-69.73909	6.78138113	0.85204792	0.052291885	-0.97661436	-13.1022911
F565	EY	3	-69.73909	6.78138113	0.85204792	0.052291885	-1.61565053	-18.1883297
F565	COMB1	0	-24.9067726	40.52987289	3.144767046	-16.2883911	2.13400507	81.17786407
F565	COMB1	0.75	-24.9067726	47.46324921	3.144767046	-16.2883911	-0.22457168	48.60159683
F565	COMB1	1.5	-24.9067726	61.13538361	3.144767046	-16.2883911	-2.58314824	8.298258781
F565	COMB1	2.25	-24.9067726	74.80751038	3.144767046	-16.2883911	-4.94172525	-43.1015244
F565	COMB1	3	-24.9067726	81.7408905	3.144767046	-16.2883911	-7.30030155	-102.228386
F565	COMB2	0	-39.6654968	29.34758759	4.081341267	-8.49831295	3.187268257	55.38103485
F565	COMB2	0.75	-39.6654968	34.65140152	4.081341267	-8.49831295	0.126260608	31.65456581
F565	COMB2	1.5	-39.6654968	44.32584763	4.081341267	-8.49831295	-2.93474698	2.311246157
F565	COMB2	2.25	-39.6654968	54.00028229	4.081341267	-8.49831295	-5.99575472	-34.8342361
F565	COMB2	3	-39.6654968	59.30410004	4.081341267	-8.49831295	-9.0567627	-77.5965729
F565	COMB3	0	-90.8269196	34.43587494	3.903650761	-9.76548862	3.07844305	57.51965332
F565	COMB3	0.75	-90.8269196	39.73969269	3.903650761	-9.76548862	0.150703341	29.97696495
F565	COMB3	1.5	-90.8269196	49.41413498	3.903650761	-9.76548862	-2.77703619	-3.18257499
F565	COMB3	2.25	-90.8269196	59.08857346	3.903650761	-9.76548862	-5.70477629	-44.1442757
F565	COMB3	3	-90.8269196	64.39238739	3.903650761	-9.76548862	-8.63251591	-90.7228317
F566	D	0	-15.3524933	51.30821609	3.509862185	0.515126228	3.263104916	98.1272049
F566	D	0.75	-15.3524933	58.0188446	3.509862185	0.515126228	0.630706966	57.59711838
F566	D	1.5	-15.3524933	72.21072388	3.509862185	0.515126228	-2.00169086	9.228583336
F566	D	2.25	-15.3524933	86.40260315	3.509862185	0.515126228	-4.63408852	-50.7190247
F566	D	3	-15.3524933	93.11323547	3.509862185	0.515126228	-7.26648664	-118.505081
F566	L	0	-6.94168901	17.22151375	-0.02397959	-0.21993011	-0.02550954	36.66171646
F566	L	0.75	-6.94168901	19.89339066	-0.02397959	-0.21993011	-0.00752484	23.07760239
F566	L	1.5	-6.94168901	27.90901947	-0.02397959	-0.21993011	0.010459862	5.485673428
F566	L	2.25	-6.94168901	35.92464828	-0.02397959	-0.21993011	0.028444562	-18.7859497
F566	L	3	-6.94168901	38.5965271	-0.02397959	-0.21993011	0.046429265	-47.0653915
F566	EX	0	-0.04677125	-0.08696198	1.209026575	1.813801169	1.158963919	-0.11263804
F566	EX	0.75	-0.04677125	-0.08696198	1.209026575	1.813801169	0.252193481	-0.04741652
F566	EX	1.5	-0.04677125	-0.08696198	1.209026575	1.813801169	-0.6545769	0.017804997
F566	EX	2.25	-0.04677125	-0.08696198	1.209026575	1.813801169	-1.56134737	0.083026513
F566	EX	3	-0.04677125	-0.08696198	1.209026575	1.813801169	-2.46811771	0.148248032
F566	EY	0	-65.3089828	6.207222939	1.112908363	0.035227187	1.265455127	1.768176079
F566	EY	0.75	-65.3089828	6.207222939	1.112908363	0.035227187	0.430773437	-2.88724399
F566	EY	1.5	-65.3089828	6.207222939	1.112908363	0.035227187	-0.40390825	-7.54266357
F566	EY	2.25	-65.3089828	6.207222939	1.112908363	0.035227187	-1.23859	-12.1980839
F566	EY	3	-65.3089828	6.207222939	1.112908363	0.035227187	-2.07327151	-16.8535042
F566	COMB1	0	-29.5296936	89.12428284	4.173467159	0.266263276	3.874910593	176.4113922
F566	COMB1	0.75	-29.5296936	101.4520416	4.173467159	0.266263276	0.744808614	106.0407028
F566	COMB1	1.5	-29.5296936	131.3072968	4.173467159	0.266263276	-2.38529325	19.85137749
F566	COMB1	2.25	-29.5296936	161.1625671	4.173467159	0.266263276	-5.51539516	-90.9203491
F566	COMB1	3	-29.5296936	173.4903259	4.173467159	0.266263276	-8.64549732	-217.510727
F566	COMB2	0	-38.9274864	61.1636734	5.279710293	2.359985352	5.016370773	115.0224075
F566	COMB2	0.75	-38.9274864	69.05147552	5.279710293	2.359985352	1.056585908	66.78785706
F566	COMB2	1.5	-38.9274864	86.47787476	5.279710293	2.359985352	-2.90319872	9.060488701
F566	COMB2	2.25	-38.9274864	103.9042664	5.279710293	2.359985352	-6.86298323	-62.9290123
F566	COMB2	3	-38.9274864	111.7920685	5.279710293	2.359985352	-10.8227682	-144.411346
F566	COMB3	0	-86.8959122	65.78859711	5.227198601	1.079940438	5.112026215	116.4031143
F566	COMB3	0.75	-86.8959122	73.6763916	5.227198601	1.079940438	1.191625118	64.69987488
F566	COMB3	1.5	-86.8959122	91.10279846	5.227198601	1.079940438	-2.72877598	3.503811359
F566	COMB3	2.25	-86.8959122	108.5291901	5.227198601	1.079940438	-6.64917707	-71.9543839
F566	COMB3	3	-86.8959122	116.4169922	5.227198601	1.079940438	-10.5695782	-156.905411
F567	D	0	-11.6822157	25.26497269	2.525885105	13.24860287	1.862267494	74.65671539
F567	D	0.75	-11.6822157	39.47560883	2.525885105	13.24860287	-0.03214751	50.84656525
F567	D	1.5	-11.6822157	61.1674881	2.525885105	13.24860287	-1.92656231	13.57296181
F567	D	2.25	-11.6822157	82.859375	2.525885105	13.24860287	-3.82097745	-40.9047203
F567	D	3	-11.6822157	97.07000732	2.525885105	13.24860287	-5.71539211	-108.845856
F567	L	0	-5.22609282	8.27581501	-0.10089477	3.857863903	-0.12845008	22.82114983
F567	L	0.75	-5.22609282	10.94769096	-0.10089477	3.857863903	-0.05277897	15.94631672
F567	L	1.5	-5.22609282	18.96332169	-0.10089477	3.857863903	0.022892142	5.06366396
F567	L	2.25	-5.22609282	26.9789505	-0.10089477	3.857863903	0.098563261	-12.4986811
F567	L	3	-5.22609282	29.65082741	-0.10089477	3.857863903	0.174234375	-34.0688477
F567	EX	0	0.921393812	0.462113529	0.662885189	1.418758631	0.465527683	0.806617558
F567	EX	0.75	0.921393812	0.462113529	0.662885189	1.418758631	-0.03163647	0.460032254
F567	EX	1.5	0.921393812	0.462113529	0.662885189	1.418758631	-0.52880067	0.113446914

F567	EX	2.25	0.921393812	0.462113529	0.662885189	1.418758631	-1.02596486	-0.23313841
F567	EX	3	0.921393812	0.462113529	0.662885189	1.418758631	-1.52312899	-0.57972372
F567	EY	0	-65.5642014	6.165494442	0.435145944	-0.01278862	0.569733024	1.717893124
F567	EY	0.75	-65.5642014	6.165494442	0.435145944	-0.01278862	0.243373364	-2.90623021
F567	EY	1.5	-65.5642014	6.165494442	0.435145944	-0.01278862	-0.08298629	-7.53035355
F567	EY	2.25	-65.5642014	6.165494442	0.435145944	-0.01278862	-0.40934595	-12.1544771
F567	EY	3	-65.5642014	6.165494442	0.435145944	-0.01278862	-0.73570555	-16.7786007
F567	COMB1	0	-22.3804073	43.55927277	2.869630575	22.07090569	2.029200792	126.1018982
F567	COMB1	0.75	-22.3804073	64.88703156	2.869630575	22.07090569	-0.12302338	86.52998352
F567	COMB1	1.5	-22.3804073	103.7423019	2.869630575	22.07090569	-2.27524734	24.38941574
F567	COMB1	2.25	-22.3804073	142.5975647	2.869630575	22.07090569	-4.42747164	-69.0835571
F567	COMB1	3	-22.3804073	163.9253387	2.869630575	22.07090569	-6.5796957	-185.125183
F567	COMB2	0	-33.6116257	31.55552292	3.44355464	16.59064674	2.576206207	86.95420074
F567	COMB2	0.75	-33.6116257	47.31832886	3.44355464	16.59064674	-0.0064614	57.97265244
F567	COMB2	1.5	-33.6116257	72.61972809	3.44355464	16.59064674	-2.58912873	13.59202003
F567	COMB2	2.25	-33.6116257	97.92113495	3.44355464	16.59064674	-5.17179632	-50.9570007
F567	COMB2	3	-33.6116257	113.6839371	3.44355464	16.59064674	-7.75446367	-130.905106
F567	COMB3	0	-82.4647141	35.75444031	3.286109686	15.55974102	2.659780025	87.63608551
F567	COMB3	0.75	-82.4647141	51.51724625	3.286109686	15.55974102	0.195196286	55.50534821
F567	COMB3	1.5	-82.4647141	76.81864929	3.286109686	15.55974102	-2.26938725	7.97552824
F567	COMB3	2.25	-82.4647141	102.1200485	3.286109686	15.55974102	-4.73397112	-59.722683
F567	COMB3	3	-82.4647141	117.8828583	3.286109686	15.55974102	-7.19855452	-142.819977
F568	D	0	-2.19563651	-44.863884	1.237780571	0.07620734	3.228172064	-42.7524109
F568	D	1.25	-2.19563651	-30.4232578	1.237780571	0.07620734	1.680946469	6.466767311
F568	D	2.5	-2.19563651	-1.85138822	1.237780571	0.07620734	0.133720741	26.86355209
F568	D	3.75	-2.19563651	26.72048187	1.237780571	0.07620734	-1.41350496	11.09523869
F568	D	5	-2.19563651	41.16110611	1.237780571	0.07620734	-2.96073055	-33.4954681
F568	L	0	-5.16008759	-11.8135796	-0.06126625	0.025489509	-0.15686873	-7.78421354
F568	L	1.25	-5.16008759	-7.90733004	-0.06126625	0.025489509	-0.08028591	5.355158329
F568	L	2.5	-5.16008759	1.311420202	-0.06126625	0.025489509	-0.00370309	9.56223774
F568	L	3.75	-5.16008759	10.53017044	-0.06126625	0.025489509	0.072879724	2.076607466
F568	L	5	-5.16008759	14.43642044	-0.06126625	0.025489509	0.149462551	-14.3413143
F568	EX	0	-23.1092587	8.200947762	-0.70574617	0.013596029	-1.85243845	22.16502953
F568	EX	1.25	-23.1092587	8.200947762	-0.70574617	0.013596029	-0.97025555	11.91384602
F568	EX	2.5	-23.1092587	8.200947762	-0.70574617	0.013596029	-0.08807275	1.662660241
F568	EX	3.75	-23.1092587	8.200947762	-0.70574617	0.013596029	0.79411006	-8.58852482
F568	EX	5	-23.1092587	8.200947762	-0.70574617	0.013596029	1.676292896	-18.8397102
F568	EY	0	-0.0234472	0.025286453	0.51511246	0.002916042	1.451746345	0.059942953
F568	EY	1.25	-0.0234472	0.025286453	0.51511246	0.002916042	0.807855844	0.028334888
F568	EY	2.5	-0.0234472	0.025286453	0.51511246	0.002916042	0.163965255	-0.00327318
F568	EY	3.75	-0.0234472	0.025286453	0.51511246	0.002916042	-0.47992533	-0.03488125
F568	EY	5	-0.0234472	0.025286453	0.51511246	0.002916042	-1.12381601	-0.06648931
F568	COMB1	0	-10.8909035	-72.7383881	1.387310624	0.132232025	3.622816563	-63.7576332
F568	COMB1	1.25	-10.8909035	-49.1596375	1.387310624	0.132232025	1.888678312	16.32837486
F568	COMB1	2.5	-10.8909035	-0.12339353	1.387310624	0.132232025	0.154539943	47.5358429
F568	COMB1	3.75	-10.8909035	48.91284943	1.387310624	0.132232025	-1.57959831	16.63685799
F568	COMB1	5	-10.8909035	72.49160004	1.387310624	0.132232025	-3.31373668	-63.1406631
F568	COMB2	0	-27.8563137	-42.3324089	0.712183774	0.103037342	1.880193353	-24.38237
F568	COMB2	1.25	-27.8563137	-25.9392834	0.712183774	0.103037342	0.98996383	20.81673622
F568	COMB2	2.5	-27.8563137	6.965085983	0.712183774	0.103037342	0.09973406	32.93865585
F568	COMB2	3.75	-27.8563137	39.86945724	0.712183774	0.103037342	-0.79049557	3.404020548
F568	COMB2	5	-27.8563137	56.26257706	0.712183774	0.103037342	-1.68072534	-59.207798
F568	COMB3	0	-11.2348814	-48.2185059	1.59892869	0.09539149	4.280982494	-40.2971344
F568	COMB3	1.25	-11.2348814	-31.8253803	1.59892869	0.09539149	2.28232193	12.25959396
F568	COMB3	2.5	-11.22'8814	1.078989148	1.59892869	0.09539149	0.283660918	31.73913574
F568	COMB3	3.75	-11.2348814	33.98336029	1.59892869	0.09539149	-1.71500003	9.562121391
F568	COMB3	5	-11.2348814	50.3764801	1.59892869	0.09539149	-3.71366096	-45.6920776
F569	D	0	-12.3661814	-50.943821	1.253273368	0.065169677	3.011962414	-53.595871
F569	D	1.25	-12.3661814	-36.5031967	1.253273368	0.065169677	1.445370436	3.223232746
F569	D	2.5	-12.3661814	-7.93132734	1.253273368	0.065169677	-0.12122133	31.21994019
F569	D	3.75	-12.3661814	20.64054298	1.253273368	0.065169677	-1.68781316	23.05154991
F569	D	5	-12.3661814	35.08116531	1.253273368	0.065169677	-3.25440502	-13.9392309
F569	L	0	-6.4111104	-14.5422964	-0.03765275	0.00057082	-0.08641931	-14.0317307
F569	L	1.25	-6.4111104	-10.6360464	-0.03765275	0.00057082	-0.03935337	2.518536329
F569	L	2.5	-6.4111104	-1.41729617	-0.03765275	0.00057082	0.007712572	10.13651085
F569	L	3.75	-6.4111104	7.801454067	-0.03765275	0.00057082	0.054778513	6.061776638
F569	L	5	-6.4111104	11.70770454	-0.03765275	0.00057082	0.10184446	-6.94524956
F569	EX	0	-9.48846245	7.997227669	-0.68878233	0.001319947	-1.64139247	18.82512665
F569	EX	1.25	-9.48846245	7.997227669	-0.68878233	0.001319947	-0.78041446	8.8285923
F569	EX	2.5	-9.48846245	7.997227669	-0.68878233	0.001319947	0.080563523	-1.1679424
F569	EX	3.75	-9.48846245	7.997227669	-0.68878233	0.001319947	0.941541493	-11.1644764
F569	EX	5	-9.48846245	7.997227669	-0.68878233	0.001319947	1.802519441	-21.1610107
F569	EY	0	0.027207812	0.015186657	1.266202807	0.016915604	3.116303205	0.028878633
F569	EY	1.25	0.027207812	0.015186657	1.266202807	0.016915604	1.533549666	0.009895312
F569	EY	2.5	0.027207812	0.015186657	1.266202807	0.016915604	-0.04920378	-0.00908801
F569	EY	3.75	0.027207812	0.015186657	1.266202807	0.016915604	-1.63195729	-0.02807133
F569	EY	5	0.027207812	0.015186657	1.266202807	0.016915604	-3.21471071	-0.04705465
F569	COMB1	0	-25.0971947	-84.4002609	1.443683624	0.079116918	3.476083994	-86.7658081
F569	COMB1	1.25	-25.0971947	-60.8215103	1.443683624	0.079116918	1.671479106	7.897537231
F569	COMB1	2.5	-25.0971947	-11.7852669	1.443683624	0.079116918	-0.13312548	53.68234634
F569	COMB1	3.75	-25.0971947	37.25097656	1.443683624	0.079116918	-1.93773019	37.36070251
F569	COMB1	5	-25.0971947	60.82972336	1.443683624	0.079116918	-3.74233484	-27.8394775
F569	COMB2	0	-24.8159771	-49.7899208	0.9900406	0.075302526	2.418132782	-41.2025566
F569	COMB2	1.25	-24.8159771	-33.3967972	0.9900406	0.075302526	1.180581808	13.3184433

F569	COMB2	2.5	-24.8159771	-0.49242762	0.9900406	0.075302526	-0.05696888	34.76225662
F569	COMB2	3.75	-24.8159771	32.41194153	0.9900406	0.075302526	-1.29451966	14.54951191
F569	COMB2	5	-24.8159771	48.80506516	0.9900406	0.075302526	-2.53207064	-38.7404137
F569	COMB3	0	-17.9642868	-55.5367622	2.416622877	0.086785138	5.89041853	-54.7354202
F569	COMB3	1.25	-17.9642868	-39.1436386	2.416622877	0.086785138	2.869639158	6.969130039
F569	COMB3	2.5	-17.9642868	-6.23926926	2.416622877	0.086785138	-0.15113939	35.59649277
F569	COMB3	3.75	-17.9642868	26.6651001	2.416622877	0.086785138	-3.17191815	22.5673027
F569	COMB3	5	-17.9642868	43.05822372	2.416622877	0.086785138	-6.19269705	-23.539072
F570	D	0	-11.9814711	-34.7409706	-1.28201807	-0.06099548	-3.3304925	-13.2856016
F570	D	1.25	-11.9814711	-20.3003445	-1.28201807	-0.06099548	-1.72796988	23.27993584
F570	D	2.5	-11.9814711	8.271524429	-1.28201807	-0.06099548	-0.12544709	31.02307892
F570	D	3.75	-11.9814711	36.84339142	-1.28201807	-0.06099548	1.477075696	2.601124048
F570	D	5	-11.9814711	51.28401566	-1.28201807	-0.06099548	3.079598427	-54.6432228
F570	L	0	-6.5220437	-11.7991352	0.001403738	0.022909433	0.007872865	-7.13596487
F570	L	1.25	-6.5220437	-7.89288521	0.001403738	0.022909433	0.006118193	5.985351086
F570	L	2.5	-6.5220437	1.325865149	0.001403738	0.022909433	0.00436352	10.17437363
F570	L	3.75	-6.5220437	10.54461575	0.001403738	0.022909433	0.002608848	2.670688152
F570	L	5	-6.5220437	14.45086479	0.001403738	0.022909433	0.000854175	-13.7652903
F570	EX	0	-21.0317345	7.958665371	-0.68862772	0.000988269	-1.80570698	21.10012627
F570	EX	1.25	-21.0317345	7.958665371	-0.68862772	0.000988269	-0.94492239	11.15179348
F570	EX	2.5	-21.0317345	7.958665371	-0.68862772	0.000988269	-0.08413775	1.203461647
F570	EX	3.75	-21.0317345	7.958665371	-0.68862772	0.000988269	0.776646912	-8.74487114
F570	EX	5	-21.0317345	7.958665371	-0.68862772	0.000988269	1.637431502	-18.6932011
F570	EY	0	0.027205558	-0.01518741	-1.26620662	-0.01691655	-3.21472001	-0.04705664
F570	EY	1.25	0.027205558	-0.01518741	-1.26620662	-0.01691655	-1.6319617	-0.02807237
F570	EY	2.5	0.027205558	-0.01518741	-1.26620662	-0.01691655	-0.04920341	-0.00908811
F570	EY	3.75	0.027205558	-0.01518741	-1.26620662	-0.01691655	1.533554792	0.009896157
F570	EY	5	0.027205558	-0.01518741	-1.26620662	-0.01691655	3.116313219	0.028880421
F570	COMB1	0	-24.8130341	-60.5677795	-1.53617573	-0.03653948	-3.98399448	-27.3602657
F570	COMB1	1.25	-24.8130341	-36.9890327	-1.53617573	-0.03653948	-2.06377459	37.5124855
F570	COMB1	2.5	-24.8130341	12.04721355	-1.53617573	-0.03653948	-0.14355487	53.50669479
F570	COMB1	3.75	-24.8130341	61.08345795	-1.53617573	-0.03653948	1.776664972	7.394449711
F570	COMB1	5	-24.8130341	84.66220093	-1.53617573	-0.03653948	3.696884871	-87.5963364
F570	COMB2	0	-36.3942642	-31.9623108	-2.45726156	-0.06113464	-6.37608099	5.626096725
F570	COMB2	1.25	-36.3942642	-15.5691872	-2.45726156	-0.06113464	-3.30450368	37.86257935
F570	COMB2	2.5	-36.3942642	17.33518219	-2.45726156	-0.06113464	-0.23292658	37.0218811
F570	COMB2	3.75	-36.3942642	50.23955154	-2.45726156	-0.06113464	2.838650465	-5.47537708
F570	COMB2	5	-36.3942642	66.63267517	-2.45726156	-0.06113464	5.910227776	-81.0498199
F570	COMB3	0	-21.2314186	-37.7037125	-2.89211154	-0.07427985	-7.4387908	-9.60058022
F570	COMB3	1.25	-21.2314186	-21.3105888	-2.89211154	-0.07427985	-3.82365131	29.8126564
F570	COMB3	2.5	-21.2314186	11.59378052	-2.89211154	-0.07427985	-0.2085119	36.14870834
F570	COMB3	3.75	-21.2314186	44.49814987	-2.89211154	-0.07427985	3.406627655	0.828203619
F570	COMB3	5	-21.2314186	60.89126968	-2.89211154	-0.07427985	7.021767139	-67.5694885
F571	D	0	-1.88796449	-41.4767113	-1.27841818	-0.03981034	-3.05938673	-34.4166374
F571	D	1.25	-1.88796449	-27.0360928	-1.27841818	-0.03981034	-1.46136403	10.56857967
F571	D	2.5	-1.88796449	1.535778761	-1.27841818	-0.03981034	0.136658803	26.73140526
F571	D	3.75	-1.88796449	30.10765076	-1.27841818	-0.03981034	1.734681606	6.729132175
F571	D	5	-1.88796449	44.54827118	-1.27841818	-0.03981034	3.332704306	-42.0955353
F571	L	0	-5.25552845	-14.350564	0.026887838	-0.00907223	0.067451879	-14.0791016
F571	L	1.25	-5.25552845	-10.444314	0.026887838	-0.00907223	0.033842087	2.231500387
F571	L	2.5	-5.25552845	-1.22556353	0.026887838	-0.00907223	0.00023229	9.609808922
F571	L	3.75	-5.25552845	7.993186951	0.026887838	-0.00907223	-0.03337751	5.295409203
F571	L	5	-5.25552845	11.89943695	0.026887838	-0.00907223	-0.0669873	-7.95128298
F571	EX	0	-7.34358358	8.118368149	-0.68960166	0.01294248	-1.64128232	18.64169884
F571	EX	1.25	-7.34358358	8.118368149	-0.68960166	0.01294248	-0.77928025	8.49373817
F571	EX	2.5	-7.34358358	8.118368149	-0.68960166	0.01294248	0.082721852	-1.65422297
F571	EX	3.75	-7.34358358	8.118368149	-0.68960166	0.01294248	0.944724023	-11.8021841
F571	EX	5	-7.34358358	8.118368149	-0.68960166	0.01294248	1.806725979	-21.9501438
F571	EY	0	-0.0234482	-0.02528698	-0.51511264	-0.00291639	-1.12381601	-0.06649052
F571	EY	1.25	-0.0234482	-0.02528698	-0.51511264	-0.00291639	-0.47992519	-0.03488179
F571	EY	2.5	-0.0234482	-0.02528698	-0.51511264	-0.00291639	0.163965613	-0.00327307
F571	EY	3.75	-0.0234482	-0.02528698	-0.51511264	-0.00291639	0.807856441	0.02833565
F571	EY	5	-0.0234482	-0.02528698	-0.51511264	-0.00291639	1.451747298	0.059944369
F571	COMB1	0	-10.6744032	-72.7329559	-1.49108136	-0.06228798	-3.56334114	-63.8265266
F571	COMB1	1.25	-10.6744032	-49.154213	-1.49108136	-0.06228798	-1.69948947	16.25269508
F571	COMB1	2.5	-10.6744032	-0.11796707	-1.49108136	-0.06228798	0.164362237	47.45338058
F571	COMB1	3.75	-10.6744032	48.91827774	-1.49108136	-0.06228798	2.028213978	16.54761314
F571	COMB1	5	-10.6744032	72.49702454	-1.49108136	-0.06228798	3.892065525	-63.2366943
F571	COMB2	0	-11.2458496	-39.6764297	-2.20986772	-0.03218181	-5.24383783	-21.2991734
F571	COMB2	1.25	-11.2458496	-23.2833099	-2.20986772	-0.03218181	-2.48150349	20.57996178
F571	COMB2	2.5	-11.2458496	9.621061325	-2.20986772	-0.03218181	0.280831218	29.38191414
F571	COMB2	3.75	-11.2458496	42.52543259	-2.20986772	-0.03218181	3.043165922	-3.47269201
F571	COMB2	5	-11.2458496	58.9185524	-2.20986772	-0.03218181	5.805500507	-69.40448
F571	COMB3	0	-5.97570372	-45.5402412	-2.09196234	-0.04364394	-4.8881197	-34.7700653
F571	COMB3	1.25	-5.97570372	-29.1471214	-2.09196234	-0.04364394	-2.27316666	14.43883228
F571	COMB3	2.5	-5.97570372	3.757250071	-2.09196234	-0.04364394	0.341786206	30.57054901
F571	COMB3	3.75	-5.97570372	36.66162109	-2.09196234	-0.04364394	2.956739187	5.045707226
F571	COMB3	5	-5.97570372	53.05474091	-2.09196234	-0.04364394	5.57169199	-53.5563202
F572	D	0	-6.67852592	-75.4253693	0.164596736	13.10248566	1.586573601	-87.5635986
F572	D	0.75	-6.67852592	-63.0850639	0.164596736	13.10248566	1.463126063	-35.3884048
F572	D	1.5	-6.67852592	-47.0041313	0.164596736	13.10248566	1.339678526	6.128818512
F572	D	2.25	-6.67852592	-30.9231987	0.164596736	13.10248566	1.216231108	35.11776733
F572	D	3	-6.67852592	-18.5828896	0.164596736	13.10248566	1.09278357	53.44876099
F572	L	0	-2.34823132	-11.6097908	-0.08728376	4.177972317	-0.15185653	-15.2478971

F572	L	0.75	-2.34823132	-10.9066658	-0.08728376	4.177972317	-0.08639373	-6.7163372
F572	L	1.5	-2.34823132	-8.79729176	-0.08728376	4.177972317	-0.02093093	0.760535181
F572	L	2.25	-2.34823132	-6.68791723	-0.08728376	4.177972317	0.044531867	6.479596138
F572	L	3	-2.34823132	-5.98479271	-0.08728376	4.177972317	0.109994665	11.14397049
F572	EX	0	-1.29770505	0.536759198	-0.1161097	-1.50368333	-0.37568757	0.901110172
F572	EX	0.75	-1.29770505	0.536759198	-0.1161097	-1.50368333	-0.2886053	0.498540848
F572	EX	1.5	-1.29770505	0.536759198	-0.1161097	-1.50368333	-0.20152307	0.09597154
F572	EX	2.25	-1.29770505	0.536759198	-0.1161097	-1.50368333	-0.11444082	-0.30659774
F572	EX	3	-1.29770505	0.536759198	-0.1161097	-1.50368333	-0.02735857	-0.70916706
F572	EY	0	-53.384285	5.212229252	-0.38405567	-0.00551754	-0.7328946	15.51627159
F572	EY	0.75	-53.384285	5.212229252	-0.38405567	-0.00551754	-0.44485295	11.60710049
F572	EY	1.5	-53.384285	5.212229252	-0.38405567	-0.00551754	-0.15681125	7.697929382
F572	EY	2.25	-53.384285	5.212229252	-0.38405567	-0.00551754	0.131230429	3.788758278
F572	EY	3	-53.384285	5.212229252	-0.38405567	-0.00551754	0.419272095	-0.12041256
F572	COMB1	0	-11.7714014	-109.086113	0.057862081	22.40773773	1.660917878	-129.472946
F572	COMB1	0.75	-11.7714014	-93.1527405	0.057862081	22.40773773	1.617521286	-53.2122231
F572	COMB1	1.5	-11.7714014	-70.4806213	0.057862081	22.40773773	1.574124694	8.571438789
F572	COMB1	2.25	-11.7714014	-47.808506	0.057862081	22.40773773	1.53072834	52.50867844
F572	COMB1	3	-11.7714014	-31.8751354	0.057862081	22.40773773	1.487331748	81.96886444
F572	COMB2	0	-25.9113197	-80.6563263	-0.09581888	13.51562119	0.998369038	-90.9245911
F572	COMB2	0.75	-25.9113197	-67.4775162	-0.09581888	13.51562119	1.070233107	-35.1012459
F572	COMB2	1.5	-25.9113197	-49.9280853	-0.09581888	13.51562119	1.142097235	9.199006081
F572	COMB2	2.25	-25.9113197	-32.3786545	-0.09581888	13.51562119	1.213961482	39.79085922
F572	COMB2	3	-25.9113197	-19.1998463	-0.09581888	13.51562119	1.28582561	58.85963058
F572	COMB3	0	-64.2144241	-77.2118073	-0.29450083	14.5942173	0.730186522	-80.1689301
F572	COMB3	0.75	-64.2144241	-64.0329971	-0.29450083	14.5942173	0.951062083	-26.9289761
F572	COMB3	1.5	-64.2144241	-46.4835625	-0.29450083	14.5942173	1.171937585	14.78788471
F572	COMB3	2.25	-64.2144241	-28.9341316	-0.29450083	14.5942173	1.392813325	42.79634857
F572	COMB3	3	-64.2144241	-15.7553234	-0.29450083	14.5942173	1.613688827	59.28172684
F573	D	0	-13.3813534	-85.8738556	-0.29960349	0.680369079	0.610620558	-112.31015
F573	D	0.75	-13.3813534	-79.1632309	-0.29960349	0.680369079	0.835323095	-49.9536858
F573	D	1.5	-13.3813534	-64.9713593	-0.29960349	0.680369079	1.060025692	4.564346313
F573	D	2.25	-13.3813534	-50.7794876	-0.29960349	0.680369079	1.284728169	47.5033226
F573	D	3	-13.3813534	-44.0688629	-0.29960349	0.680369079	1.509430766	82.60386658
F573	L	0	-4.62837553	-25.8176289	0.024368554	-0.03880201	0.021829301	-34.2991791
F573	L	0.75	-4.62837553	-24.4113789	0.024368554	-0.03880201	0.003552891	-15.2875252
F573	L	1.5	-4.62837553	-20.1926308	0.024368554	-0.03880201	-0.01472352	1.614755273
F573	L	2.25	-4.62837553	-15.9738817	0.024368554	-0.03880201	-0.03299993	15.00141144
F573	L	3	-4.62837553	-14.5676317	0.024368554	-0.03880201	-0.05127634	26.27869415
F573	EX	0	-0.19868128	-0.01697051	0.713602602	-1.90838456	1.01960814	-0.05580335
F573	EX	0.75	-0.19868128	-0.01697051	0.713602602	-1.90838456	0.484406441	-0.04307547
F573	EX	1.5	-0.19868128	-0.01697051	0.713602602	-1.90838456	-0.05079535	-0.03034759
F573	EX	2.25	-0.19868128	-0.01697051	0.713602602	-1.90838456	-0.5859971	-0.01761971
F573	EX	3	-0.19868128	-0.01697051	0.713602602	-1.90838456	-1.12119889	-0.00489183
F573	EY	0	-53.2568855	5.199577808	-1.13174617	-0.00877437	-2.13657594	15.47123909
F573	EY	0.75	-53.2568855	5.199577808	-1.13174617	-0.00877437	-1.28776658	11.57155704
F573	EY	1.5	-53.2568855	5.199577808	-1.13174617	-0.00877437	-0.43895715	7.671875
F573	EY	2.25	-53.2568855	5.199577808	-1.13174617	-0.00877437	0.409852177	3.772192955
F573	EY	3	-53.2568855	5.199577808	-1.13174617	-0.00877437	1.258661509	-0.12748909
F573	COMB1	0	-23.4630241	-144.356827	-0.3205345	0.754359722	0.767671585	-189.650864
F573	COMB1	0.75	-23.4630241	-134.054077	-0.3205345	0.754359722	1.008072376	-84.4044571
F573	COMB1	1.5	-23.4630241	-110.273842	-0.3205345	0.754359722	1.248473167	8.060824394
F573	COMB1	2.25	-23.4630241	-86.4935913	-0.3205345	0.754359722	1.488873959	81.00624084
F573	COMB1	3	-23.4630241	-76.1908493	-0.3205345	0.754359722	1.72927475	141.1705475
F573	COMB2	0	-32.4899139	-96.6797943	0.075171083	-1.27577698	1.030300975	-123.914215
F573	COMB2	0.75	-32.4899139	-89.1906738	0.075171083	-1.27577698	0.97392261	-53.666481
F573	COMB2	1.5	-32.4899139	-72.9603043	0.075171083	-1.27577698	0.917544365	7.686442375
F573	COMB2	2.25	-32.4899139	-56.7299309	0.075171083	-1.27577698	0.86116606	55.77393723
F573	COMB2	3	-32.4899139	-49.2408104	0.075171083	-1.27577698	0.804787755	94.96662903
F573	COMB3	0	-71.4906693	-92.8458862	-1.27045619	0.091810688	-1.2742002	-112.502678
F573	COMB3	0.75	-71.4906693	-85.3567657	-1.27045619	0.091810688	-0.32135844	-45.1303711
F573	COMB3	1.5	-71.4906693	-69.1263962	-1.27045619	0.091810688	0.631483495	13.34712124
F573	COMB3	2.25	-71.4906693	-52.8960228	-1.27045619	0.091810688	1.584325314	58.55918503
F573	COMB3	3	-71.4906693	-45.4069023	-1.27045619	0.091810688	2.537167072	94.87644958
F574	D	0	-15.1695623	-45.448761	0.384934783	-11.4079494	1.892468214	-58.8268776
F574	D	0.75	-15.1695623	-40.608448	0.384934783	-11.4079494	1.603767276	-26.3216476
F574	D	1.5	-15.1695623	-32.0275154	0.384934783	-11.4079494	1.315066338	1.150619268
F574	D	2.25	-15.1695623	-23.446579	0.384934783	-11.4079494	1.02636528	21.71961021
F574	D	3	-15.1695623	-18.6062679	0.384934783	-11.4079494	0.737664282	37.25563431
F574	L	0	-3.41678309	-11.1727705	0.110689662	-4.09476089	0.136890844	-15.0622187
F574	L	0.75	-3.41678309	-10.539958	0.110689662	-4.09476089	0.053873621	-6.84084654
F574	L	1.5	-3.41678309	-8.64152145	0.110689662	-4.09476089	-0.0291436	0.431307882
F574	L	2.25	-3.41678309	-6.74308538	0.110689662	-4.09476089	-0.11216083	6.121432304
F574	L	3	-3.41678309	-6.11027336	0.110689662	-4.09476089	-0.19517805	10.86233902
F574	EX	0	0.171342999	-0.62197083	0.51990819	-1.42323947	0.589041591	-1.04136074
F574	EX	0.75	0.171342999	-0.62197083	0.51990819	-1.42323947	0.199110568	-0.57488263
F574	EX	1.5	0.171342999	-0.62197083	0.51990819	-1.42323947	-0.19082046	-0.10840462
F574	EX	2.25	0.171342999	-0.62197083	0.51990819	-1.42323947	-0.58075148	0.358073413
F574	EX	3	0.171342999	-0.62197083	0.51990819	-1.42323947	-0.97068256	0.824551404
F574	EY	0	-55.1504745	5.117398739	-0.83193552	-0.01077287	-1.6412468	15.20968246
F574	EY	0.75	-55.1504745	5.117398739	-0.83193552	-0.01077287	-1.01729536	11.37163353
F574	EY	1.5	-55.1504745	5.117398739	-0.83193552	-0.01077287	-0.39334393	7.533586025
F574	EY	2.25	-55.1504745	5.117398739	-0.83193552	-0.01077287	0.23060748	3.695538759
F574	EY	3	-55.1504745	5.117398739	-0.83193552	-0.01077287	0.854558945	-0.14250894

F574	COMB1	0	-23.6703281	-72.4149475	0.639025211	-20.2411556	2.489987373	-94.691803
F574	COMB1	0.75	-23.6703281	-65.5940704	0.639025211	-20.2411556	2.010718584	-42.5313301
F574	COMB1	1.5	-23.6703281	-52.2594528	0.639025211	-20.2411556	1.531449795	2.070835829
F574	COMB1	2.25	-23.6703281	-38.9248314	0.639025211	-20.2411556	1.052181125	35.85782242
F574	COMB1	3	-23.6703281	-32.1039581	0.639025211	-20.2411556	0.572912276	62.08650208
F574	COMB2	0	-34.1993866	-50.2723808	0.71509403	-14.7446423	2.122877598	-62.7995758
F574	COMB2	0.75	-34.1993866	-44.9907188	0.71509403	-14.7446423	1.586557269	-26.8055344
F574	COMB2	1.5	-34.1993866	-35.3827286	0.71509403	-14.7446423	1.050236821	3.604892969
F574	COMB2	2.25	-34.1993866	-25.7747402	0.71509403	-14.7446423	0.513916492	26.26854134
F574	COMB2	3	-34.1993866	-20.4930763	0.71509403	-14.7446423	-0.02240394	43.34857178
F574	COMB3	0	-74.8583527	-46.0632744	-0.27071247	-13.727828	0.49245128	-50.8706818
F574	COMB3	0.75	-74.8583527	-40.7816124	-0.27071247	-13.727828	0.695485473	-18.0334682
F574	COMB3	1.5	-74.8583527	-31.1736202	-0.27071247	-13.727828	0.898519814	9.220129967
F574	COMB3	2.25	-74.8583527	-21.5656338	-0.27071247	-13.727828	1.101554036	28.72694969
F574	COMB3	3	-74.8583527	-16.2839699	-0.27071247	-13.727828	1.304588318	42.6501503
F575	D	0	-15.185544	-45.3996086	-0.37185198	11.34161377	-1.88251984	-58.7539215
F575	D	0.75	-15.185544	-40.5592957	-0.37185198	11.34161377	-1.6036309	-26.2855587
F575	D	1.5	-15.185544	-31.9783611	-0.37185198	11.34161377	-1.32474196	1.149842739
F575	D	2.25	-15.185544	-23.3974266	-0.37185198	11.34161377	-1.04585314	21.68196678
F575	D	3	-15.185544	-18.5571156	-0.37185198	11.34161377	-0.7669642	37.18112946
F575	L	0	-3.65829039	-11.7881641	-0.1041666	4.20593214	-0.13793862	-15.7861328
F575	L	0.75	-3.65829039	-11.0850401	-0.1041666	4.20593214	-0.0598137	-7.12079334
F575	L	1.5	-3.65829039	-8.97566509	-0.1041666	4.20593214	0.018311223	0.489859581
F575	L	2.25	-3.65829039	-6.86629105	-0.1041666	4.20593214	0.096436143	6.342700481
F575	L	3	-3.65829039	-6.16316605	-0.1041666	4.20593214	0.174561068	11.14085579
F575	EX	0	-0.07300171	0.621296525	-0.10052757	-1.40864432	-0.39201167	1.037340045
F575	EX	0.75	-0.07300171	0.621296525	-0.10052757	-1.40864432	-0.31661603	0.57136786
F575	EX	1.5	-0.07300171	0.621296525	-0.10052757	-1.40864432	-0.2412204	0.105395548
F575	EX	2.25	-0.07300171	0.621296525	-0.10052757	-1.40864432	-0.16582474	-0.36057672
F575	EX	3	-0.07300171	0.621296525	-0.10052757	-1.40864432	-0.0904291	-0.82654899
F575	EY	0	-55.1504974	5.117390156	0.831937969	0.010773067	1.641251564	15.20965767
F575	EY	0.75	-55.1504974	5.117390156	0.831937969	0.010773067	1.017298341	11.37161541
F575	EY	1.5	-55.1504974	5.117390156	0.831937969	0.010773067	0.393345058	7.533574104
F575	EY	2.25	-55.1504974	5.117390156	0.831937969	0.010773067	-0.23060821	3.695532799
F575	EY	3	-55.1504974	5.117390156	0.831937969	0.010773067	-0.85456145	-0.14250912
F575	COMB1	0	-24.0759163	-73.3405914	-0.61288893	20.33942795	-2.4797256	-95.7625198
F575	COMB1	0.75	-24.0759163	-66.4072189	-0.61288893	20.33942795	-2.02005887	-42.9359398
F575	COMB1	1.5	-24.0759163	-52.7350998	-0.61288893	20.33942795	-1.5603925	2.163586617
F575	COMB1	2.25	-24.0759163	-39.0629768	-0.61288893	20.33942795	-1.10072589	36.1666832
F575	COMB1	3	-24.0759163	-32.1296043	-0.61288893	20.33942795	-0.64105934	62.44272232
F575	COMB2	0	-34.5451469	-49.1278381	-0.26524261	11.77900887	-1.90883434	-60.7995605
F575	COMB2	0.75	-34.5451469	-43.824028	-0.26524261	11.77900887	-1.70990241	-25.6694622
F575	COMB2	1.5	-34.5451469	-34.1495934	-0.26524261	11.77900887	-1.51097047	3.843800783
F575	COMB2	2.25	-34.5451469	-24.4751587	-0.26524261	11.77900887	-1.31203854	25.55491257
F575	COMB2	3	-34.5451469	-19.1713505	-0.26524261	11.77900887	-1.11310661	41.64918518
F575	COMB3	0	-75.0281982	-45.8138924	0.418611646	12.80115128	-0.420266	-50.3673477
F575	COMB3	0.75	-75.0281982	-40.5100784	0.418611646	12.80115128	-0.73422456	-17.7227097
F575	COMB3	1.5	-75.0281982	-30.8356457	0.418611646	12.80115128	-1.0481832	9.305092812
F575	COMB3	2.25	-75.0281982	-21.161211	0.418611646	12.80115128	-1.36214185	28.53074455
F575	COMB3	3	-75.0281982	-15.8574018	0.418611646	12.80115128	-1.67610037	42.13955688
F576	D	0	-13.5067234	-86.0276718	0.324235588	-0.57191604	-0.57583916	-112.575928
F576	D	0.75	-13.5067234	-79.3170471	0.324235588	-0.57191604	-0.8190158	-50.1041031
F576	D	1.5	-13.5067234	-65.1251755	0.324235588	-0.57191604	-1.06219244	4.529294014
F576	D	2.25	-13.5067234	-50.9333115	0.324235588	-0.57191604	-1.30536902	47.58363724
F576	D	3	-13.5067234	-4[illegible].2226906	0.324235588	-0.57191604	-1.54854572	82.79955292
F576	L	0	-6.12679338	-35.9709167	-0.00096352	0.157203883	0.008391868	-45.3302345
F576	L	0.75	-6.12679338	-33.2990417	-0.00096352	0.157203883	0.009114507	-19.0200253
F576	L	1.5	-6.12679338	-25.2834206	-0.00096352	0.157203883	0.009837146	3.282373905
F576	L	2.25	-6.12679338	-17.2677975	-0.00096352	0.157203883	0.010559784	18.90509033
F576	L	3	-6.12679338	-14.5959225	-0.00096352	0.157203883	0.011282424	30.51999855
F576	EX	0	-0.08379018	0.01321481	0.661586583	-1.88778687	0.902009189	0.051190488
F576	EX	0.75	-0.08379018	0.01321481	0.661586583	-1.88778687	0.405819416	0.041279383
F576	EX	1.5	-0.08379018	0.01321481	0.661586583	-1.88778687	-0.09037033	0.031368278
F576	EX	2.25	-0.08379018	0.01321481	0.661586583	-1.88778687	-0.58656013	0.021457173
F576	EX	3	-0.08379018	0.01321481	0.661586583	-1.88778687	-1.08274984	0.011546068
F576	EY	0	-53.2568855	5.199576378	1.131747842	0.008774535	2.136578321	15.47123528
F576	EY	0.75	-53.2568855	5.199576378	1.131747842	0.008774535	1.287767768	11.57155418
F576	EY	1.5	-53.2568855	5.199576378	1.131747842	0.008774535	0.438957214	7.671873093
F576	EY	2.25	-53.2568855	5.199576378	1.131747842	0.008774535	-0.40985337	3.77219224
F576	EY	3	-53.2568855	5.199576378	1.131747842	0.008774535	-1.25866401	-0.12748906
F576	COMB1	0	-26.0109386	-160.786667	0.387541085	-0.43477303	-0.67758006	-207.619492
F576	COMB1	0.75	-26.0109386	-148.458923	0.387541085	-0.43477303	-0.96823573	-90.5569687
F576	COMB1	1.5	-26.0109386	-118.603683	0.387541085	-0.43477303	-1.25889146	10.68695164
F576	COMB1	2.25	-26.0109386	-88.7484512	0.387541085	-0.43477303	-1.5495472	87.34851074
F576	COMB1	3	-26.0109386	-76.4207001	0.387541085	-0.43477303	-1.84020293	148.191452
F576	COMB2	0	-32.9746399	-100.008354	1.381386518	-2.50208807	1.004613996	-127.557327
F576	COMB2	0.75	-32.9746399	-92.1205597	1.381386518	-2.50208807	-0.03142556	-54.9128532
F576	COMB2	1.5	-32.9746399	-74.6941681	1.381386518	-2.50208807	-1.06746519	8.238812447
F576	COMB2	2.25	-32.9746399	-57.2677879	1.381386518	-2.50208807	-2.10350466	57.12837219
F576	COMB2	3	-32.9746399	-49.3799934	1.381386518	-2.50208807	-3.13954425	96.52511597
F576	COMB3	0	-72.0581207	-96.1961746	1.736878872	-1.13643217	1.925552487	-116.222832
F576	COMB3	0.75	-72.0581207	-88.3083801	1.736878872	-1.13643217	0.622893751	-46.4374809
F576	COMB3	1.5	-72.0581207	-70.8819962	1.736878872	-1.13643217	-0.67976493	13.85505486
F576	COMB3	2.25	-72.0581207	-53.455616	1.736878872	-1.13643217	-1.98242366	59.88548279

F576	COMB3	3	-72.0581207	-45.5678215	1.736878872	-1.13643217	-3.28508234	96.42310333
F577	D	0	-8.73894978	-90.3844681	-0.1589385	-12.8883896	-1.58529794	-103.775436
F577	D	0.75	-8.73894978	-76.173851	-0.1589385	-12.8883896	-1.46609414	-40.8485069
F577	D	1.5	-8.73894978	-54.4819832	-0.1589385	-12.8883896	-1.34689021	8.614992142
F577	D	2.25	-8.73894978	-32.7901192	-0.1589385	-12.8883896	-1.22768652	40.87443924
F577	D	3	-8.73894978	-18.5794983	-0.1589385	-12.8883896	-1.1084826	59.67046356
F577	L	0	-4.59544563	-27.4578114	0.09542805	-4.14132547	0.152023122	-32.4890709
F577	L	0.75	-4.59544563	-24.7859364	0.09542805	-4.14132547	0.080452099	-12.5636883
F577	L	1.5	-4.59544563	-16.7703133	0.09542805	-4.14132547	0.008881091	3.353885174
F577	L	2.25	-4.59544563	-8.75469112	0.09542805	-4.14132547	-0.06268992	12.59177494
F577	L	3	-4.59544563	-6.0828166	0.09542805	-4.14132547	-0.13426094	17.82185364
F577	EX	0	1.482685804	-0.53230256	0.424471587	-1.48608553	0.400625736	-0.89254779
F577	EX	0.75	1.482685804	-0.53230256	0.424471587	-1.48608553	0.082272135	-0.49332103
F577	EX	1.5	1.482685804	-0.53230256	0.424471587	-1.48608553	-0.23608144	-0.0940942
F577	EX	2.25	1.482685804	-0.53230256	0.424471587	-1.48608553	-0.55443501	0.305132598
F577	EX	3	1.482685804	-0.53230256	0.424471587	-1.48608553	-0.87278861	0.704359412
F577	EY	0	-53.3842773	5.212231159	0.384055525	0.005517692	0.732893884	15.51627541
F577	EY	0.75	-53.3842773	5.212231159	0.384055525	0.005517692	0.444852352	11.60710335
F577	EY	1.5	-53.3842773	5.212231159	0.384055525	0.005517692	0.156810775	7.697931767
F577	EY	2.25	-53.3842773	5.212231159	0.384055525	0.005517692	-0.13123079	3.78875947
F577	EY	3	-53.3842773	5.212231159	0.384055525	0.005517692	-0.41927233	-0.1204126
F577	COMB1	0	-17.8394527	-152.39386	-0.03804133	-22.0921879	-1.65912056	-176.513046
F577	COMB1	0.75	-17.8394527	-131.066116	-0.03804133	-22.0921879	-1.6305896	-69.1201096
F577	COMB1	1.5	-17.8394527	-92.2108841	-0.03804133	-22.0921879	-1.60205853	15.70420647
F577	COMB1	2.25	-17.8394527	-53.3556442	-0.03804133	-22.0921879	-1.57352769	69.19616699
F577	COMB1	3	-17.8394527	-32.0279045	-0.03804133	-22.0921879	-1.54499662	100.1195221
F577	COMB2	0	-25.9049301	-102.461983	0.423480004	-16.3736858	-0.97116631	-115.234428
F577	COMB2	0.75	-25.9049301	-86.6991959	0.423480004	-16.3736858	-1.28877628	-43.7028465
F577	COMB2	1.5	-25.9049301	-61.3978119	0.423480004	-16.3736858	-1.60638618	12.42967701
F577	COMB2	2.25	-25.9049301	-36.0964317	0.423480004	-16.3736858	-1.92399609	48.3938446
F577	COMB2	3	-25.9049301	-20.3336411	0.423480004	-16.3736858	-2.241606	68.95895386
F577	COMB3	0	-66.2099075	-98.2477341	0.400141269	-15.2996492	-0.72093982	-103.187332
F577	COMB3	0.75	-66.2099075	-82.4849472	0.400141269	-15.2996492	-1.0210458	-34.816433
F577	COMB3	1.5	-66.2099075	-57.183567	0.400141269	-15.2996492	-1.32115161	18.15540504
F577	COMB3	2.25	-66.2099075	-31.8821831	0.400141269	-15.2996492	-1.62125754	50.95888519
F577	COMB3	3	-66.2099075	-16.1193924	0.400141269	-15.2996492	-1.92136335	68.36331177
F578	D	0	0.187145963	-36.0180511	-0.05746622	-0.00181005	-0.14504032	-26.1796761
F578	D	1.25	0.187145963	-23.3774281	-0.05746622	-0.00181005	-0.07320753	13.10721207
F578	D	2.5	0.187145963	3.394441605	-0.05746622	-0.00181005	-0.00137474	25.82170868
F578	D	3.75	0.187145963	30.16631126	-0.05746622	-0.00181005	0.07045804	4.621108532
F578	D	5	0.187145963	42.80693436	-0.05746622	-0.00181005	0.142290831	-43.151886
F578	L	0	-0.21097305	-11.8281393	-0.01413399	-0.00030917	-0.03558799	-8.32152271
F578	L	1.25	-0.21097305	-7.92188835	-0.01413399	-0.00030917	-0.0179205	4.836046696
F578	L	2.5	-0.21097305	1.296861649	-0.01413399	-0.00030917	-0.00025302	9.06132412
F578	L	3.75	-0.21097305	10.51561165	-0.01413399	-0.00030917	0.017414469	1.593892455
F578	L	5	-0.21097305	14.4218626	-0.01413399	-0.00030917	0.035081957	-14.805831
F578	EX	0	-0.8541863	0.950621545	-0.21704815	-0.00099884	-0.54805219	2.895969868
F578	EX	1.25	-0.8541863	0.950621545	-0.21704815	-0.00099884	-0.27674198	1.707692981
F578	EX	2.5	-0.8541863	0.950621545	-0.21704815	-0.00099884	-0.00543178	0.519415915
F578	EX	3.75	-0.8541863	0.950621545	-0.21704815	-0.00099884	0.265878409	-0.66886103
F578	EX	5	-0.8541863	0.950621545	-0.21704815	-0.00099884	0.53718859	-1.85713804
F578	EY	0	0.006167392	0.002413174	0.33367613	-0.00016957	0.844011784	0.006100975
F578	EY	1.25	0.006167392	0.002413174	0.33367613	-0.00016957	0.426916629	0.003084506
F578	EY	2.5	0.006167392	0.002413174	0.33367613	-0.00016957	0.009821497	6.80386E-05
F578	EY	3.75	0.006167392	0.002413174	0.33367613	-0.00016957	-0.40727365	-0.00294843
F578	EY	5	0.006167392	0.002413174	0.33367613	-0.00016957	-0.82436883	-0.0059649
F578	COMB1	0	-0.11298174	-62.1466827	-0.09157385	-0.00266673	-0.23098917	-44.7300491
F578	COMB1	1.25	-0.11298174	-40.7279358	-0.09157385	-0.00266673	-0.11652184	23.46632957
F578	COMB1	2.5	-0.11298174	6.148308277	-0.09157385	-0.00266673	-0.00205452	45.48416901
F578	COMB1	3.75	-0.11298174	53.02455139	-0.09157385	-0.00266673	0.112412795	8.095558167
F578	COMB1	5	-0.11298174	74.44329834	-0.09157385	-0.00266673	0.226880133	-75.4715881
F578	COMB2	0	-0.75209332	-40.5601654	-0.18432862	-0.00308516	-0.46487287	-27.1106892
F578	COMB2	1.25	-0.75209332	-26.0570412	-0.18432862	-0.00308516	-0.23446208	17.05436134
F578	COMB2	2.5	-0.75209332	4.95732832	-0.18432862	-0.00308516	-0.0040513	30.50472832
F578	COMB2	3.75	-0.75209332	35.97169876	-0.18432862	-0.00308516	0.226359472	4.661040306
F578	COMB2	5	-0.75209332	50.47481918	-0.18432862	-0.00308516	0.456770211	-51.8973312
F578	COMB3	0	-0.13254617	-41.2428398	0.217198014	-0.00249063	0.550073385	-29.1913033
F578	COMB3	1.25	-0.13254617	-26.7397156	0.217198014	-0.00249063	0.278575897	15.82708931
F578	COMB3	2.5	-0.13254617	4.274654865	0.217198014	-0.00249063	0.007078378	30.13080025
F578	COMB3	3.75	-0.13254617	35.28902435	0.217198014	-0.00249063	-0.26441914	5.140452862
F578	COMB3	5	-0.13254617	49.79214478	0.217198014	-0.00249063	-0.53591669	-50.564579
F579	D	0	-0.64518505	-43.7496033	-0.0492432	-0.00490714	-0.12157237	-44.5227203
F579	D	1.25	-0.64518505	-31.108984	-0.0492432	-0.00490714	-0.06001837	4.428613186
F579	D	2.5	-0.64518505	-4.33711386	-0.0492432	-0.00490714	0.001535635	26.80755424
F579	D	3.75	-0.64518505	22.43475533	-0.0492432	-0.00490714	0.063089639	15.27139854
F579	D	5	-0.64518505	35.07537842	-0.0492432	-0.00490714	0.124643646	-22.8371506
F579	L	0	-0.20671244	-14.4316998	-0.00550305	-0.00081555	-0.01351318	-14.7318964
F579	L	1.25	-0.20671244	-10.5254498	-0.00550305	-0.00081555	-0.00663436	1.680124521
F579	L	2.5	-0.20671244	-1.30669963	-0.00550305	-0.00081555	0.000244454	9.159853935
F579	L	3.75	-0.20671244	7.912050724	-0.00550305	-0.00081555	0.00712327	4.946874142
F579	L	5	-0.20671244	11.81830025	-0.00550305	-0.00081555	0.014002087	-8.19839859
F579	EX	0	-0.45348093	0.915701032	-0.21240155	-0.00292654	-0.52644223	1.870346427
F579	EX	1.25	-0.45348093	0.915701032	-0.21240155	-0.00292654	-0.26094022	0.725720108
F579	EX	2.5	-0.45348093	0.915701032	-0.21240155	-0.00292654	0.004561711	-0.4189063

F581	COMB2	2.5	-0.17623664	-3.20704818	-0.25726885	0.000401794	0.006277037	29.37905312
F581	COMB2	3.75	-0.17623664	27.80732155	-0.25726885	0.000401794	0.327863097	13.74083519
F581	COMB2	5	-0.17623664	42.31044388	-0.25726885	0.000401794	0.64944917	-32.6120644
F581	COMB3	0	0.054046981	-49.4044685	-0.3625553	0.001372561	-0.89600104	-49.9751816
F581	COMB3	1.25	0.054046981	-34.9013443	-0.3625553	0.001372561	-0.4428069	5.245252609
F581	COMB3	2.5	0.054046981	-3.88697696	-0.3625553	0.001372561	0.010387264	29.75100136
F581	COMB3	3.75	0.054046981	27.12739372	-0.3625553	0.001372561	0.463581413	14.96269512
F581	COMB3	5	0.054046981	41.63051605	-0.3625553	0.001372561	0.916775525	-30.5402966
F582	D	0	-6.73599243	17.43516159	-0.02254923	-13.0771904	1.237823844	53.45056915
F582	D	0.75	-6.73599243	29.77547073	-0.02254923	-13.0771904	1.254735827	35.98037338
F582	D	1.5	-6.73599243	45.85640335	-0.02254923	-13.0771904	1.271647692	7.852221966
F582	D	2.25	-6.73599243	61.93733597	-0.02254923	-13.0771904	1.288559675	-32.8042068
F582	D	3	-6.73599243	74.2776413	-0.02254923	-13.0771904	1.305471539	-84.1185989
F582	L	0	-2.36236525	5.843346596	0.123689309	-4.1435504	0.145582661	11.14427948
F582	L	0.75	-2.36236525	6.546471119	0.123689309	-4.1435504	0.052815709	6.585990429
F582	L	1.5	-2.36236525	8.655845642	0.123689309	-4.1435504	-0.03995125	0.973013759
F582	L	2.25	-2.36236525	10.76521969	0.123689309	-4.1435504	-0.13271821	-6.39777374
F582	L	3	-2.36236525	11.46834469	0.123689309	-4.1435504	-0.22548515	-14.8232489
F582	EX	0	-1.51475322	-0.41386232	0.738076568	1.392286658	0.5206936	-0.70816827
F582	EX	0.75	-1.51475322	-0.41386232	0.738076568	1.392286658	-0.03286367	-0.39777157
F582	EX	1.5	-1.51475322	-0.41386232	0.738076568	1.392286658	-0.58642095	-0.08737491
F582	EX	2.25	-1.51475322	-0.41386232	0.738076568	1.392286658	-1.13997829	0.223021746
F582	EX	3	-1.51475322	-0.41386232	0.738076568	1.392286658	-1.69353545	0.533418417
F582	EY	0	-53.0506058	5.209815979	-0.39022309	0.000583433	-0.42473969	-0.12024297
F582	EY	0.75	-53.0506058	5.209815979	-0.39022309	0.000583433	-0.13207248	-4.0276041
F582	EY	1.5	-53.0506058	5.209815979	-0.39022309	0.000583433	0.160594746	-7.93496513
F582	EY	2.25	-53.0506058	5.209815979	-0.39022309	0.000583433	0.453261942	-11.8423262
F582	EY	3	-53.0506058	5.209815979	-0.39022309	0.000583433	0.745929182	-15.7496872
F582	COMB1	0	-11.8629751	30.27154732	0.170843825	-22.3223095	1.718320966	81.9715271
F582	COMB1	0.75	-11.8629751	46.20491791	0.170843825	-22.3223095	1.590188146	53.71403503
F582	COMB1	1.5	-11.8629751	68.87703705	0.170843825	-22.3223095	1.462055206	10.97948837
F582	COMB1	2.25	-11.8629751	91.54915619	0.170843825	-22.3223095	1.333922386	-49.6014862
F582	COMB1	3	-11.8629751	107.4825211	0.170843825	-22.3223095	1.205789566	-124.659515
F582	COMB2	0	-26.0956478	21.36031723	0.656274438	-13.595068	1.750698447	58.86271667
F582	COMB2	0.75	-26.0956478	34.53912735	0.656274438	-13.595068	1.258492827	38.17359161
F582	COMB2	1.5	-26.0956478	52.0885582	0.656274438	-13.595068	0.766287088	5.961385727
F582	COMB2	2.25	-26.0956478	69.63799286	0.656274438	-13.595068	0.274081379	-39.9592209
F582	COMB2	3	-26.0956478	82.81679535	0.656274438	-13.595068	-0.21812427	-97.402916
F582	COMB3	0	-63.9972191	25.48751259	-0.16195467	-14.597086	1.063615441	59.28421783
F582	COMB3	0.75	-63.9972191	38.6663208	-0.16195467	-14.597086	1.185081363	35.49969864
F582	COMB3	1.5	-63.9972191	56.21575546	-0.16195467	-14.597086	1.306547284	0.192095995
F582	COMB3	2.25	-63.9972191	73.7651825	-0.16195467	-14.597086	1.428013206	-48.8239059
F582	COMB3	3	-63.9972191	86.94399261	-0.16195467	-14.597086	1.549479246	-109.362999
F583	D	0	-13.3731298	42.48767471	0.53272754	-0.69046676	1.773293972	82.60696411
F583	D	0.75	-13.3731298	49.19829559	0.53272754	-0.69046676	1.373748422	48.69231415
F583	D	1.5	-13.3731298	63.39016724	0.53272754	-0.69046676	0.974202991	6.939232349
F583	D	2.25	-13.3731298	77.58203125	0.53272754	-0.69046676	0.57465744	-46.3929062
F583	D	3	-13.3731298	84.29265594	0.53272754	-0.69046676	0.17511189	-107.563477
F583	L	0	-4.61974525	14.28593063	0.020107936	0.035132736	-0.00268121	26.2791996
F583	L	0.75	-4.61974525	15.69218063	0.020107936	0.035132736	-0.01776216	15.21319389
F583	L	1.5	-4.61974525	19.91092873	0.020107936	0.035132736	-0.0328431	2.037813425
F583	L	2.25	-4.61974525	24.12967682	0.020107936	0.035132736	-0.04792405	-14.6531906
F583	L	3	-4.61974525	25.53592682	0.020107936	0.035132736	-0.06300499	-33.4535675
F583	EX	0	-0.19403468	0.01795001	0.312897205	1.819100142	-0.05756807	-0.00296413
F583	EX	0.75	-0.19403468	0.01795001	0.312897205	1.819100142	-0.29224092	-0.01642663
F583	EX	1.5	-0.19403468	0.01795001	0.312897205	1.819100142	-0.52691376	-0.02988914
F583	EX	2.25	-0.19403468	0.01795001	0.312897205	1.819100142	-0.76158667	-0.04335164
F583	EX	3	-0.19403468	0.01795001	0.312897205	1.819100142	-0.99625945	-0.05681414
F583	EY	0	-52.9114151	5.200221539	-1.12627423	-9.2118E-05	-1.2532233	-0.12722757
F583	EY	0.75	-52.9114151	5.200221539	-1.12627423	-9.2118E-05	-0.4085179	-4.02739239
F583	EY	1.5	-52.9114151	5.200221539	-1.12627423	-9.2118E-05	0.436187476	-7.92755699
F583	EY	2.25	-52.9114151	5.200221539	-1.12627423	-9.2118E-05	1.280892968	-11.8277216
F583	EY	3	-52.9114151	5.200221539	-1.12627423	-9.2118E-05	2.125598431	-15.7278872
F583	COMB1	0	-23.4393482	73.84269714	0.671445727	-0.77234769	2.123662949	141.1750793
F583	COMB1	0.75	-23.4393482	84.14544678	0.671445727	-0.77234769	1.620078683	82.77188873
F583	COMB1	1.5	-23.4393482	107.9256821	0.671445727	-0.77234769	1.116494656	11.58758068
F583	COMB1	2.25	-23.4393482	131.7059174	0.671445727	-0.77234769	0.61291045	-79.1165924
F583	COMB1	3	-23.4393482	142.008667	0.671445727	-0.77234769	0.109326281	-182.601883
F583	COMB2	0	-32.3649292	50.76877213	0.534770131	1.168816328	1.406765819	94.97211456
F583	COMB2	0.75	-32.3649292	58.25789642	0.534770131	1.168816328	1.00568831	54.63345718
F583	COMB2	1.5	-32.3649292	74.48826599	0.534770131	1.168816328	0.60461086	5.399989605
F583	COMB2	2.25	-32.3649292	90.71862793	0.534770131	1.168816328	0.203533322	-57.0989075
F583	COMB2	3	-32.3649292	98.20775604	0.534770131	1.168816328	-0.19754413	-128.492615
F583	COMB3	0	-71.1151123	54.57801056	-0.51832747	-0.14100344	0.527095675	94.8807373
F583	COMB3	0.75	-71.1151123	62.06713486	-0.51832747	-0.14100344	0.915841103	51.68515015
F583	COMB3	1.5	-71.1151123	78.29750061	-0.51832747	-0.14100344	1.30458653	-0.40524477
F583	COMB3	2.25	-71.1151123	94.52787018	-0.51832747	-0.14100344	1.693332076	-65.7610703
F583	COMB3	3	-71.1151123	102.0169907	-0.51832747	-0.14100344	2.082077503	-140.011703
F584	D	0	-15.1203194	16.46911049	-0.2602503	11.42920113	0.862307966	37.25072861
F584	D	0.75	-15.1203194	21.30941963	-0.2602503	11.42920113	1.057495594	23.31756973
F584	D	1.5	-15.1203194	29.89035606	-0.2602503	11.42920113	1.252683282	4.35144949
F584	D	2.25	-15.1203194	38.47129059	-0.2602503	11.42920113	1.44787097	-21.5179482
F584	D	3	-15.1203194	43.31159973	-0.2602503	11.42920113	1.643058538	-52.420311
F584	L	0	-3.41127992	5.708027363	-0.09602278	4.103637695	-0.18117596	10.86152363

F586	COMB1	0	-25.9909229	73.83475494	-0.62495852	0.451985031	-2.09902763	148.1961823
F586	COMB1	0.75	-25.9909229	86.16249847	-0.62495852	0.451985031	-1.63030887	89.29269409
F586	COMB1	1.5	-25.9909229	116.017746	-0.62495852	0.451985031	-1.16159022	14.57059002
F586	COMB1	2.25	-25.9909229	145.8729706	-0.62495852	0.451985031	-0.69287145	-84.7338638
F586	COMB1	3	-25.9909229	158.2007141	-0.62495852	0.451985031	-0.2241527	-199.856934
F586	COMB2	0	-32.8610764	50.84597397	0.077476144	2.443560362	-1.58142507	96.52709961
F586	COMB2	0.75	-32.8610764	58.73376846	0.077476144	2.443560362	-1.63953209	56.03086853
F586	COMB2	1.5	-32.8610764	76.16015625	0.077476144	2.443560362	-1.69763923	6.041824818
F586	COMB2	2.25	-32.8610764	93.58653259	0.077476144	2.443560362	-1.75574625	-58.2093239
F586	COMB2	3	-32.8610764	101.4743271	0.077476144	2.443560362	-1.81385338	-131.953293
F586	COMB3	0	-71.6887589	54.67644501	0.721589625	1.135280848	-0.5699569	96.42649078
F586	COMB3	0.75	-71.6887589	62.5642395	0.721589625	1.135280848	-1.11114895	53.05740738
F586	COMB3	1.5	-71.6887589	79.99062347	0.721589625	1.135280848	-1.65234101	0.195509136
F586	COMB3	2.25	-71.6887589	97.41699982	0.721589625	1.135280848	-2.19353294	-66.9284897
F586	COMB3	3	-71.6887589	105.3047943	0.721589625	1.135280848	-2.734725	-143.545303
F587	D	0	-8.78410816	17.2442379	0.043246444	12.86654949	-1.22257638	59.67191696
F587	D	0.75	-8.78410816	31.45485687	0.043246444	12.86654949	-1.2550112	41.87734222
F587	D	1.5	-8.78410816	53.1467247	0.043246444	12.86654949	-1.28744602	10.61933804
F587	D	2.25	-8.78410816	74.83859253	0.043246444	12.86654949	-1.31988084	-37.8427162
F587	D	3	-8.78410816	89.04920959	0.043246444	12.86654949	-1.35231578	-99.7681961
F587	L	0	-4.6005969	5.731262207	-0.11395998	4.111305714	-0.14723109	17.82196999
F587	L	0.75	-4.6005969	8.403136253	-0.11395998	4.111305714	-0.06176113	12.85555744
F587	L	1.5	-4.6005969	16.41875839	-0.11395998	4.111305714	0.02370883	3.881333351
F587	L	2.25	-4.6005969	24.43438148	-0.11395998	4.111305714	0.109178796	-11.7725735
F587	L	3	-4.6005969	27.10625458	-0.11395998	4.111305714	0.194648758	-31.4342899
F587	EX	0	1.677082419	0.409579456	0.110929199	1.385145307	-0.38247988	0.703184307
F587	EX	0.75	1.677082419	0.409579456	0.110929199	1.385145307	-0.46567672	0.395999819
F587	EX	1.5	1.677082419	0.409579456	0.110929199	1.385145307	-0.5488736	0.088815302
F587	EX	2.25	1.677082419	0.409579456	0.110929199	1.385145307	-0.63207048	-0.21836919
F587	EX	3	1.677082419	0.409579456	0.110929199	1.385145307	-0.71526736	-0.5255537
F587	EY	0	-53.050602	5.209817886	0.390223026	-0.00058338	0.42473945	-0.12024297
F587	EY	0.75	-53.050602	5.209817886	0.390223026	-0.00058338	0.13207227	-4.02760506
F587	EY	1.5	-53.050602	5.209817886	0.390223026	-0.00058338	-0.16059491	-7.93496704
F587	EY	2.25	-53.050602	5.209817886	0.390223026	-0.00058338	-0.45326209	-11.842329
F587	EY	3	-53.050602	5.209817886	0.390223026	-0.00058338	-0.7459293	-15.749691
F587	COMB1	0	-17.901886	29.86310387	-0.13044025	22.01794815	-1.7026614	100.1214523
F587	COMB1	0.75	-17.901886	51.19084549	-0.13044025	22.01794815	-1.60483122	70.82170105
F587	COMB1	1.5	-17.901886	90.04608154	-0.13044025	22.01794815	-1.50700104	18.95333862
F587	COMB1	2.25	-17.901886	128.9013214	-0.13044025	22.01794815	-1.40917087	-64.2473755
F587	COMB1	3	-17.901886	150.2290497	-0.13044025	22.01794815	-1.31134081	-170.016708
F587	COMB2	0	-25.6476612	21.97680473	0.247243345	16.23838043	-1.59215677	68.95935059
F587	COMB2	0.75	-25.6476612	37.73959351	0.247243345	16.23838043	-1.7775892	47.16187668
F587	COMB2	1.5	-25.6476612	63.04097748	0.247243345	16.23838043	-1.96302164	9.965333939
F587	COMB2	2.25	-25.6476612	88.34235382	0.247243345	16.23838043	-2.14845395	-47.399559
F587	COMB2	3	-25.6476612	104.1051483	0.247243345	16.23838043	-2.33388662	-120.163513
F587	COMB3	0	-65.8473511	25.51112366	0.454188228	15.24064636	-1.00458777	68.36468506
F587	COMB3	0.75	-65.8473511	41.27391434	0.454188228	15.24064636	-1.34522879	43.91646576
F587	COMB3	1.5	-65.8473511	66.57529449	0.454188228	15.24064636	-1.68586981	4.069186211
F587	COMB3	2.25	-65.8473511	91.87667847	0.454188228	15.24064636	-2.02651095	-55.9464455
F587	COMB3	3	-65.8473511	107.6394653	0.454188228	15.24064636	-2.36715221	-131.36113
F588	D	0	-2.18262005	-44.7882652	-1.44516206	-0.0013908	-3.76248717	-42.5248108
F588	D	1.25	-2.18262005	-30.3476429	-1.44516206	-0.0013908	-1.9560343	6.599850178
F588	D	2.5	-2.18262005	-1.77577353	-1.44516206	-0.0013908	-0.1495816	26.90211678
F588	D	3.75	-2.18262005	26.7960968	-1.44516206	-0.0013908	1.6568712	11.03928375
F588	D	5	-2.18262005	41.23672104	-1.44516206	-0.0013908	3.463323832	-33.6459389
F588	L	0	-5.18773603	-11.7502804	0.00984029	0.00038563	0.027434355	-7.58445978
F588	L	1.25	-5.18773603	-7.84403038	0.00984029	0.00038563	0.015133994	5.475787163
F588	L	2.5	-5.18773603	1.374719501	0.00984029	0.00038563	0.00283363	9.603742599
F588	L	3.75	-5.18773603	10.59346962	0.00984029	0.00038563	-0.00946673	2.03898859
F588	L	5	-5.18773603	14.49971962	0.00984029	0.00038563	-0.02176709	-14.4580584
F588	EX	0	-22.8503246	7.950449944	0.085582688	0.004518286	0.229090139	21.51469231
F588	EX	1.25	-22.8503246	7.950449944	0.085582688	0.004518286	0.122111782	11.57662868
F588	EX	2.5	-22.8503246	7.950449944	0.085582688	0.004518286	0.015133421	1.638566017
F588	EX	3.75	-22.8503246	7.950449944	0.085582688	0.004518286	-0.09184494	-8.2994976
F588	EX	5	-22.8503246	7.950449944	0.085582688	0.004518286	-0.19882329	-18.2375584
F588	EY	0	-0.00854125	0.008932515	0.514055967	0.000456945	1.445888162	0.023342945
F588	EY	1.25	-0.00854125	0.008932515	0.514055967	0.000456945	0.803318202	0.0121773
F588	EY	2.5	-0.00854125	0.008932515	0.514055967	0.000456945	0.160748243	0.001011655
F588	EY	3.75	-0.00854125	0.008932515	0.514055967	0.000456945	-0.48182175	-0.01015399
F588	EY	5	-0.00854125	0.008932515	0.514055967	0.000456945	-1.12439167	-0.02131963
F588	COMB1	0	-10.9195223	-72.5463715	-1.71845007	-0.00105196	-4.47108984	-63.1649094
F588	COMB1	1.25	-10.9195223	-48.9676208	-1.71845007	-0.00105196	-2.32302666	16.68107986
F588	COMB1	2.5	-10.9195223	0.068623006	-1.71845007	-0.00105196	-0.1749641	47.64852905
F588	COMB1	3.75	-10.9195223	49.10486603	-1.71845007	-0.00105196	1.973098636	16.50952148
F588	COMB1	5	-10.9195223	72.68361664	-1.71845007	-0.00105196	4.121161461	-63.5080185
F588	COMB2	0	-27.5786629	-42.4974899	-1.26381481	0.003481494	-3.24940681	-24.7650967
F588	COMB2	1.25	-27.5786629	-26.1043663	-1.26381481	0.003481494	-1.6696378	20.64036179
F588	COMB2	2.5	-27.5786629	6.800003529	-1.26381481	0.003481494	-0.08986929	32.96863556
F588	COMB2	3.75	-27.5786629	39.70437241	-1.26381481	0.003481494	1.489899278	3.640351295
F588	COMB2	5	-27.5786629	56.09749985	-1.26381481	0.003481494	3.069667816	-58.7651138
F588	COMB3	0	-11.1327085	-48.2152481	-0.94760323	0.000564183	-2.35162377	-40.2385178
F588	COMB3	1.25	-11.1327085	-31.8221245	-0.94760323	0.000564183	-1.16711938	12.31413937
F588	COMB3	2.5	-11.1327085	1.082245231	-0.94760323	0.000564183	0.017384607	31.78961182
F588	COMB3	3.75	-11.1327085	33.98661423	-0.94760323	0.000564183	1.20188868	9.60852623

F588	COMB3	5	-11.1327085	50.37973785	-0.94760323	0.000564183	2.386392832	-45.6497421
F589	D	0	-12.370018	-50.9151955	-1.42141867	0.013660489	-3.41285801	-53.5584564
F589	D	1.25	-12.370018	-36.4745712	-1.42141867	0.013660489	-1.63608456	3.224857092
F589	D	2.5	-12.370018	-7.90269947	-1.42141867	0.013660489	0.140688822	31.18578148
F589	D	3.75	-12.370018	20.66917038	-1.42141867	0.013660489	1.917462111	22.98160744
F589	D	5	-12.370018	35.10979462	-1.42141867	0.013660489	3.694235325	-14.044961
F589	L	0	-6.41951561	-14.5271053	0.02444208	0.018099187	0.059628546	-14.0074224
F589	L	1.25	-6.41951561	-10.6208553	0.02444208	0.018099187	0.029075941	2.523854733
F589	L	2.5	-6.41951561	-1.40210474	0.02444208	0.018099187	-0.00147666	10.12284088
F589	L	3.75	-6.41951561	7.816645145	0.02444208	0.018099187	-0.03202926	6.029116631
F589	L	5	-6.41951561	11.72289562	0.02444208	0.018099187	-0.06258187	-6.99689913
F589	EX	0	-9.33374405	7.715014458	0.068787925	0.045217767	0.1799431	18.17302513
F589	EX	1.25	-9.33374405	7.715014458	0.068787925	0.045217767	0.093958192	8.529255867
F589	EX	2.5	-9.33374405	7.715014458	0.068787925	0.045217767	0.007973284	-1.11451185
F589	EX	3.75	-9.33374405	7.715014458	0.068787925	0.045217767	-0.07801162	-10.7582808
F589	EX	5	-9.33374405	7.715014458	0.068787925	0.045217767	-0.16399653	-20.4020481
F589	EY	0	-0.00728633	0.010501403	1.276301026	0.012639937	3.142844915	0.024301864
F589	EY	1.25	-0.00728633	0.010501403	1.276301026	0.012639937	1.547468543	0.01117511
F589	EY	2.5	-0.00728633	0.010501403	1.276301026	0.012639937	-0.04790771	-0.00195164
F589	EY	3.75	-0.00728633	0.010501403	1.276301026	0.012639937	-1.64328396	-0.0150784
F589	EY	5	-0.00728633	0.010501403	1.276301026	0.012639937	-3.23866034	-0.02820515
F589	COMB1	0	-25.1152458	-84.3415985	-1.66659498	0.045351285	-4.00002384	-86.6820297
F589	COMB1	1.25	-25.1152458	-60.7628555	-1.66659498	0.045351285	-1.91677988	7.907996178
F589	COMB1	2.5	-25.1152458	-11.7266073	-1.66659498	0.045351285	0.166463926	53.61948013
F589	COMB1	3.75	-25.1152458	37.30963898	-1.66659498	0.045351285	2.249707699	37.22451401
F589	COMB1	5	-25.1152458	60.88838577	-1.66659498	0.045351285	4.332951546	-28.0489902
F589	COMB2	0	-24.6733875	-50.048645	-1.01155996	0.070826724	-2.38848066	-41.8319817
F589	COMB2	1.25	-24.6733875	-33.6555214	-1.01155996	0.070826724	-1.12403047	13.01241493
F589	COMB2	2.5	-24.6733875	-0.75114965	-1.01155996	0.070826724	0.140419528	34.77962875
F589	COMB2	3.75	-24.6733875	32.15322113	-1.01155996	0.070826724	1.404869556	14.89028931
F589	COMB2	5	-24.6733875	48.54634476	-1.01155996	0.070826724	2.669319391	-38.0762367
F589	COMB3	0	-17.9584465	-55.5957336	-0.12300606	0.047560286	-0.20804858	-54.8987007
F589	COMB3	1.25	-17.9584465	-39.2026138	-0.12300606	0.047560286	-0.05429098	6.879563808
F589	COMB3	2.5	-17.9584465	-6.29824162	-0.12300606	0.047560286	0.099466607	35.5806427
F589	COMB3	3.75	-17.9584465	26.60612869	-0.12300606	0.047560286	0.253224134	22.62516785
F589	COMB3	5	-17.9584465	42.99925232	-0.12300606	0.047560286	0.406981647	-23.4074917
F590	D	0	-11.9842434	-34.7585106	1.417379141	-0.01375913	3.682821512	-13.3570824
F590	D	1.25	-11.9842434	-20.3178883	1.417379141	-0.01375913	1.911097765	23.23038101
F590	D	2.5	-11.9842434	8.25398159	1.417379141	-0.01375913	0.13937366	30.99545288
F590	D	3.75	-11.9842434	36.82585144	1.417379141	-0.01375913	-1.63235033	2.595427275
F590	D	5	-11.9842434	51.26647568	1.417379141	-0.01375913	-3.40407419	-54.6269913
F590	L	0	-6.52277517	-11.7930737	-0.02814246	-0.01949572	-0.07231114	-7.13257027
F590	L	1.25	-6.52277517	-7.88682318	-0.02814246	-0.01949572	-0.03713307	5.981168747
F590	L	2.5	-6.52277517	1.331926823	-0.02814246	-0.01949572	-0.001955	10.16261482
F590	L	3.75	-6.52277517	10.55067635	-0.02814246	-0.01949572	0.03322307	2.651351213
F590	L	5	-6.52277517	14.4569273	-0.02814246	-0.01949572	0.068401143	-13.7922039
F590	EX	0	-21.0176849	7.751413822	0.112682275	0.044915471	0.285396636	20.55173683
F590	EX	1.25	-21.0176849	7.751413822	0.112682275	0.044915471	0.144543797	10.86246872
F590	EX	2.5	-21.0176849	7.751413822	0.112682275	0.044915471	0.003690942	1.173200965
F590	EX	3.75	-21.0176849	7.751413822	0.112682275	0.044915471	-0.13716191	-8.51606655
F590	EX	5	-21.0176849	7.751413822	0.112682275	0.044915471	-0.27801478	-18.2053337
F590	EY	0	-0.00728502	-0.01050145	-1.27630436	-0.01264077	-3.23866796	-0.02820529
F590	EY	1.25	-0.00728502	-0.01050145	-1.27630436	-0.01264077	-1.64328778	-0.01507848
F590	EY	2.5	-0.00728502	-0.01050145	-1.27630436	-0.01264077	-0.04790734	-0.00195166
F590	EY	3.75	-0.00728502	-0.01050145	-1.27630436	-0.01264077	1.547472954	0.01117516
F590	EY	5	-0.00728502	-0.01050145	-1.27630436	-0.01264077	3.142853498	0.024301978
F590	COMB1	0	-24.8175316	-60.5791321	1.655827045	-0.04770412	4.303688049	-27.4406109
F590	COMB1	1.25	-24.8175316	-37.0003853	1.655827045	-0.04770412	2.233904362	37.44632721
F590	COMB1	2.5	-24.8175316	12.03586102	1.655827045	-0.04770412	0.164120391	53.45472717
F590	COMB1	3.75	-24.8175316	61.07210541	1.655827045	-0.04770412	-1.90566349	7.356674194
F590	COMB1	5	-24.8175316	84.65084839	1.655827045	-0.04770412	-3.97544718	-87.6199112
F590	COMB2	0	-36.3937263	-32.1918488	1.193973541	0.021917429	3.119389772	4.990466118
F590	COMB2	1.25	-36.3937263	-15.798727	1.193973541	0.021917429	1.626922846	37.51387405
F590	COMB2	2.5	-36.3937263	17.10564232	1.193973541	0.021917429	0.13445583	36.96009827
F590	COMB2	3.75	-36.3937263	50.01001358	1.193973541	0.021917429	-1.35801113	-5.2502346
F590	COMB2	5	-36.3937263	66.40313721	1.193973541	0.021917429	-2.85047817	-80.5377502
F590	COMB3	0	-21.2663498	-37.7805862	0.174758643	-0.01971268	0.533483088	-9.82751465
F590	COMB3	1.25	-21.2663498	-21.3874645	0.174758643	-0.01971268	0.315034807	29.68181419
F590	COMB3	2.5	-21.2663498	11.51690674	0.174758643	-0.01971268	0.096586451	36.11396027
F590	COMB3	3.75	-21.2663498	44.42127609	0.174758643	-0.01971268	-0.1218619	0.88954705
F590	COMB3	5	-21.2663498	60.81439972	0.174758643	-0.01971268	-0.3403101	-67.4120483
F591	D	0	-1.87196517	-41.5186539	1.435102463	-0.00402608	3.438613415	-34.4864388
F591	D	1.25	-1.87196517	-27.0780296	1.435102463	-0.00402608	1.644735217	10.55120277
F591	D	2.5	-1.87196517	1.493840218	1.435102463	-0.00402608	-0.14914303	26.76645088
F591	D	3.75	-1.87196517	30.06571007	1.435102463	-0.00402608	-1.94302118	6.816601753
F591	D	5	-1.87196517	44.5063324	1.435102463	-0.00402608	-3.73689961	-41.9556427
F591	L	0	-5.27492523	-14.3965931	-0.01275103	-0.00293969	-0.02856209	-14.1581793
F591	L	1.25	-5.27492523	-10.490344	-0.01275103	-0.00293969	-0.0126233	2.209959269
F591	L	2.5	-5.27492523	-1.27159286	-0.01275103	-0.00293969	0.003315492	9.645804405
F591	L	3.75	-5.27492523	7.947157383	-0.01275103	-0.00293969	0.019254282	5.388941288
F591	L	5	-5.27492523	11.85340786	-0.01275103	-0.00293969	0.035193071	-7.80021477
F591	EX	0	-7.38262033	7.901648521	0.110541902	0.004526274	0.267573595	18.13291931
F591	EX	1.25	-7.38262033	7.901648521	0.110541902	0.004526274	0.1293962	8.255856514
F591	EX	2.5	-7.38262033	7.901648521	0.110541902	0.004526274	-0.00878118	-1.62120485

F591	EX	3.75	-7.38262033	7.901648521	0.110541902	0.004526274	-0.14695856	-11.4982662
F591	EX	5	-7.38262033	7.901648521	0.110541902	0.004526274	-0.28513592	-21.3753281
F591	EY	0	-0.00854071	-0.00893264	-0.51405549	-0.00045732	-1.12439013	-0.02131991
F591	EY	1.25	-0.00854071	-0.00893264	-0.51405549	-0.00045732	-0.48182079	-0.01015411
F591	EY	2.5	-0.00854071	-0.00893264	-0.51405549	-0.00045732	0.160748556	0.001011692
F591	EY	3.75	-0.00854071	-0.00893264	-0.51405549	-0.00045732	0.803317904	0.012177492
F591	EY	5	-0.00854071	-0.00893264	-0.51405549	-0.00045732	1.445887327	0.023343291
F591	COMB1	0	-10.6862383	-72.8569336	1.701721311	-0.00953479	4.080636501	-64.0368118
F591	COMB1	1.25	-10.6862383	-49.2781868	1.701721311	-0.00953479	1.953484893	16.19737816
F591	COMB1	2.5	-10.6862383	-0.24194039	1.701721311	-0.00953479	-0.17366683	47.55302811
F591	COMB1	3.75	-10.6862383	48.79430389	1.701721311	-0.00953479	-2.30081868	16.80222893
F591	COMB1	5	-10.6862383	72.3730545	1.701721311	-0.00953479	-4.42797041	-62.8271141
F591	COMB2	0	-11.2708673	-39.9541206	1.455324411	-0.00061275	3.524302721	-21.9097328
F591	COMB2	1.25	-11.2708673	-23.560997	1.455324411	-0.00061275	1.705147147	20.31651306
F591	COMB2	2.5	-11.2708673	9.343373299	1.455324411	-0.00061275	-0.11400852	29.46557426
F591	COMB2	3.75	-11.2708673	42.2477417	1.455324411	-0.00061275	-1.93316412	-3.0419209
F591	COMB2	5	-11.2708673	58.64086533	1.455324411	-0.00061275	-3.75231981	-68.6266022
F591	COMB3	0	-5.961658	-45.6498756	0.997903526	-0.0042078	2.505223036	-34.9811058
F591	COMB3	1.25	-5.961658	-29.2567501	0.997903526	-0.0042078	1.257843614	14.36483288
F591	COMB3	2.5	-5.961658	3.64762044	0.997903526	-0.0042078	0.010464122	30.63358498
F591	COMB3	3.75	-5.961658	36.55199051	0.997903526	-0.0042078	-1.23691535	5.245780945
F591	COMB3	5	-5.961658	52.94511414	0.997903526	-0.0042078	-2.48429465	-53.2192078
F592	D	0	-8.2023735	-74.6451569	2.654644251	13.60826492	5.89215374	-84.1041412
F592	D	0.75	-8.2023735	-62.3048363	2.654644251	13.60826492	3.901169777	-32.51408
F592	D	1.5	-8.2023735	-46.2238922	2.654644251	13.60826492	1.910185218	8.418005943
F592	D	2.25	-8.2023735	-30.1429462	2.654644251	13.60826492	-0.08079895	36.82179642
F592	D	3	-8.2023735	-17.8026257	2.654644251	13.60826492	-2.07178307	54.56760406
F592	L	0	-2.33279324	-11.4985828	-0.13151766	4.196671963	-0.22943006	-14.6914082
F592	L	0.75	-2.33279324	-10.7954578	-0.13151766	4.196671963	-0.13079177	-6.24324656
F592	L	1.5	-2.33279324	-8.68608189	-0.13151766	4.196671963	-0.03215347	1.150225282
F592	L	2.25	-2.33279324	-6.57670546	-0.13151766	4.196671963	0.066484824	6.78588295
F592	L	3	-2.33279324	-5.87358046	-0.13151766	4.196671963	0.165123135	11.36685085
F592	EX	0	-1.29560637	0.530034006	-1.05903947	-1.457605	-2.02326226	0.888104141
F592	EX	0.75	-1.29560637	0.530034006	-1.05903947	-1.457605	-1.22898233	0.490578383
F592	EX	1.5	-1.29560637	0.530034006	-1.05903947	-1.457605	-0.43470222	0.093052678
F592	EX	2.25	-1.29560637	0.530034006	-1.05903947	-1.457605	0.359577835	-0.30447304
F592	EX	3	-1.29560637	0.530034006	-1.05903947	-1.457605	1.153857946	-0.70199877
F592	EY	0	-41.6592484	5.24465704	-0.37454084	-0.00299701	-0.717026	15.73067856
F592	EY	0.75	-41.6592484	5.24465704	-0.37454084	-0.00299701	-0.43612021	11.79718399
F592	EY	1.5	-41.6592484	5.24465704	-0.37454084	-0.00299701	-0.15521447	7.863688469
F592	EY	2.25	-41.6592484	5.24465704	-0.37454084	-0.00299701	0.12569131	3.930193663
F592	EY	3	-41.6592484	5.24465704	-0.37454084	-0.00299701	0.406597078	-0.00330127
F592	COMB1	0	-13.5753174	-107.971916	2.975144625	23.04459381	6.703496456	-124.431229
F592	COMB1	0.75	-13.5753174	-92.0385361	2.975144625	23.04459381	4.472136974	-49.0060921
F592	COMB1	1.5	-13.5753174	-69.3664017	2.975144625	23.04459381	2.240776777	11.94196701
F592	COMB1	2.25	-13.5753174	-46.6942635	2.975144625	23.04459381	0.009416986	55.04356766
F592	COMB1	3	-13.5753174	-30.7608795	2.975144625	23.04459381	-2.22194266	83.66809082
F592	COMB2	0	-23.8109379	-79.7988129	1.53186202	14.10106468	3.794551373	-87.0627899
F592	COMB2	0.75	-23.8109379	-66.6199951	1.53186202	14.10106468	2.64565444	-31.8825455
F592	COMB2	1.5	-23.8109379	-49.070549	1.53186202	14.10106468	1.496756792	11.77459812
F592	COMB2	2.25	-23.8109379	-31.5211048	1.53186202	14.10106468	0.347859651	41.72332001
F592	COMB2	3	-23.8109379	-18.3422832	1.53186202	14.10106468	-0.80103749	60.14893341
F592	COMB3	0	-53.4976501	-76.3256149	2.019083023	15.14833736	4.724286079	-76.1401825
F592	COMB3	0.75	-53.4976501	-63.1467972	2.019083023	15.14833736	3.209973335	-23.5648327
F592	COMB3	1.5	-53.4976501	-45.5973511	2.019083023	15.14833736	1.695659757	17.4874115
F592	COMB3	2.25	-53.4976501	-28.047905	2.019083023	15.14833736	0.181346714	44.83123398
F592	COMB3	3	-53.4976501	-14.8690844	2.019083023	15.14833736	-1.33296633	60.65194702
F593	D	0	-13.395319	-84.6520462	3.807594299	0.454639107	7.661623001	-107.529045
F593	D	0.75	-13.395319	-77.9414139	3.807594299	0.454639107	4.805925846	-46.0888863
F593	D	1.5	-13.395319	-63.749527	3.807594299	0.454639107	1.950228691	7.512822628
F593	D	2.25	-13.395319	-49.5576477	3.807594299	0.454639107	-0.90546858	49.53545761
F593	D	3	-13.395319	-42.8470192	3.807594299	0.454639107	-3.76116586	83.71965027
F593	L	0	-4.5822897	-25.5210762	-0.05649536	-0.14694725	-0.11791171	-33.2183189
F593	L	0.75	-4.5822897	-24.1148262	-0.05649536	-0.14694725	-0.07554017	-14.4290628
F593	L	1.5	-4.5822897	-19.8960743	-0.05649536	-0.14694725	-0.03316863	2.250815392
F593	L	2.25	-4.5822897	-15.6773214	-0.05649536	-0.14694725	0.009202913	15.41506386
F593	L	3	-4.5822897	-14.2710714	-0.05649536	-0.14694725	0.051574454	26.46993637
F593	EX	0	-0.1995523	-0.07838605	-0.59825987	-1.78667867	-1.42487168	-0.15145305
F593	EX	0.75	-0.1995523	-0.07838605	-0.59825987	-1.78667867	-0.97617656	-0.09266348
F593	EX	1.5	-0.1995523	-0.07838605	-0.59825987	-1.78667867	-0.52748138	-0.03387391
F593	EX	2.25	-0.1995523	-0.07838605	-0.59825987	-1.78667867	-0.07878625	0.024915658
F593	EX	3	-0.1995523	-0.07838605	-0.59825987	-1.78667867	0.369908869	0.083705224
F593	EY	0	-41.6483841	5.235975742	-1.11032915	0.000121023	-2.09575844	15.7106781
F593	EY	0.75	-41.6483841	5.235975742	-1.11032915	0.000121023	-1.26301122	11.78369427
F593	EY	1.5	-41.6483841	5.235975742	-1.11032915	0.000121023	-0.43026385	7.856709957
F593	EY	2.25	-41.6483841	5.235975742	-1.11032915	0.000121023	0.402483493	3.929725885
F593	EY	3	-41.6483841	5.235975742	-1.11032915	0.000121023	1.235230923	0.002741892
F593	COMB1	0	-23.4060459	-142.416168	4.478720665	0.310451329	9.005289078	-182.184158
F593	COMB1	0.75	-23.4060459	-132.113419	4.478720665	0.310451329	5.64624691	-78.3931656
F593	COMB1	1.5	-23.4060459	-108.333153	4.478720665	0.310451329	2.287204504	12.61669159
F593	COMB1	2.25	-23.4060459	-84.5528946	4.478720665	0.310451329	-1.07183766	84.10665131
F593	COMB1	3	-23.4060459	-74.2501373	4.478720665	0.310451329	-4.43088007	142.8154755
F593	COMB2	0	-28.8342838	-95.3555832	3.011225224	-1.41809165	5.872655869	-118.577156
F593	COMB2	0.75	-28.8342838	-87.8664474	3.011225224	-1.41809165	3.614235878	-49.3225288

F593	COMB2	1.5	-28.8342838	-71.6360626	3.011225224	-1.41809165	1.355815649	11.03727531
F593	COMB2	2.25	-28.8342838	-55.4056854	3.011225224	-1.41809165	-0.90260458	58.13162994
F593	COMB2	3	-28.8342838	-47.9165535	3.011225224	-1.41809165	-3.16102481	96.3311615
F593	COMB3	0	-59.3021698	-91.4506989	2.62588048	-0.13159403	5.358181	-106.920761
F593	COMB3	0.75	-59.3021698	-83.9615707	2.62588048	-0.13159403	3.388769865	-40.5947952
F593	COMB3	1.5	-59.3021698	-67.7311859	2.62588048	-0.13159403	1.419358373	16.83634567
F593	COMB3	2.25	-59.3021698	-51.5008049	2.62588048	-0.13159403	-0.55005306	61.00203705
F593	COMB3	3	-59.3021698	-44.011673	2.62588048	-0.13159403	-2.51946449	96.27290344
F594	D	0	-14.0154991	-42.5918961	2.642451048	-8.89838982	6.072852135	-53.1030693
F594	D	0.75	-14.0154991	-37.7515793	2.642451048	-8.89838982	4.091012478	-22.7404633
F594	D	1.5	-14.0154991	-29.170639	2.642451048	-8.89838982	2.109172821	2.589172363
F594	D	2.25	-14.0154991	-20.5896969	2.642451048	-8.89838982	0.127333418	21.01551819
F594	D	3	-14.0154991	-15.7493811	2.642451048	-8.89838982	-1.8545059	34.40888977
F594	L	0	-3.38090611	-10.2425537	0.069556348	-3.46602058	0.073811278	-13.7247477
F594	L	0.75	-3.38090611	-9.60974121	0.069556348	-3.46602058	0.021643985	-6.20103073
F594	L	1.5	-3.38090611	-7.71130371	0.069556348	-3.46602058	-0.03052331	0.373466402
F594	L	2.25	-3.38090611	-5.81286526	0.069556348	-3.46602058	-0.0826906	5.365931034
F594	L	3	-3.38090611	-5.18005323	0.069556348	-3.46602058	-0.13485789	9.409176826
F594	EX	0	0.027752645	-0.37823787	-0.06307758	-1.78841186	-0.85818952	-0.50733596
F594	EX	0.75	0.027752645	-0.37823787	-0.06307758	-1.78841186	-0.81088132	-0.22365743
F594	EX	1.5	0.027752645	-0.37823787	-0.06307758	-1.78841186	-0.76357305	0.060021121
F594	EX	2.25	0.027752645	-0.37823787	-0.06307758	-1.78841186	-0.7162649	0.343699664
F594	EX	3	0.027752645	-0.37823787	-0.06307758	-1.78841186	-0.6689567	0.627378166
F594	EY	0	-42.6709175	5.060979366	-0.83207887	0.000288944	-1.62571108	15.2677784
F594	EY	0.75	-42.6709175	5.060979366	-0.83207887	0.000288944	-1.00165153	11.47204113
F594	EY	1.5	-42.6709175	5.060979366	-0.83207887	0.000288944	-0.37759203	7.676304817
F594	EY	2.25	-42.6709175	5.060979366	-0.83207887	0.000288944	0.246467471	3.880568266
F594	EY	3	-42.6709175	5.060979366	-0.83207887	0.000288944	0.870526969	0.084831499
F594	COMB1	0	-22.2280483	-67.4983597	3.282231569	-16.2236996	7.405520439	-85.6832809
F594	COMB1	0.75	-22.2280483	-60.6774788	3.282231569	-16.2236996	4.943845272	-37.2102051
F594	COMB1	1.5	-22.2280483	-47.3428535	3.282231569	-16.2236996	2.482170105	3.704552889
F594	COMB1	2.25	-22.2280483	-34.0082207	3.282231569	-16.2236996	0.020495139	33.80411148
F594	COMB1	3	-22.2280483	-27.1873436	3.282231569	-16.2236996	-2.44117975	56.34534836
F594	COMB2	0	-29.1938744	-46.745163	2.4690938	-12.2860212	4.999419689	-55.7972641
F594	COMB2	0.75	-29.1938744	-41.4634933	2.4690938	-12.2860212	3.147598505	-22.4486027
F594	COMB2	1.5	-29.1938744	-31.8554993	2.4690938	-12.2860212	1.295777082	5.316430569
F594	COMB2	2.25	-29.1938744	-22.2475014	2.4690938	-12.2860212	-0.5560444	25.33467102
F594	COMB2	3	-29.1938744	-16.9658356	2.4690938	-12.2860212	-2.40786552	39.76928329
F594	COMB3	0	-60.5769806	-42.7530098	1.90293169	-10.9981518	4.422418594	-44.2101631
F594	COMB3	0.75	-60.5769806	-37.471344	1.90293169	-10.9981518	2.995219231	-13.8556194
F594	COMB3	1.5	-60.5769806	-27.863348	1.90293169	-10.9981518	1.568019509	10.91529942
F594	COMB3	2.25	-60.5769806	-18.2553501	1.90293169	-10.9981518	0.140819952	27.93942451
F594	COMB3	3	-60.5769806	-12.9736834	1.90293169	-10.9981518	-1.28637958	39.37992096
F595	D	0	-14.0404015	-42.5471306	-2.6416955	8.818163872	-6.08127069	-53.0373001
F595	D	0.75	-14.0404015	-37.7068138	-2.6416955	8.818163872	-4.09999847	-22.7082653
F595	D	1.5	-14.0404015	-29.1258755	-2.6416955	8.818163872	-2.11872554	2.587797165
F595	D	2.25	-14.0404015	-20.5449333	-2.6416955	8.818163872	-0.13745302	20.98056984
F595	D	3	-14.0404015	-15.7046185	-2.6416955	8.818163872	1.843819618	34.34037018
F595	L	0	-3.64202118	-10.8818512	-0.08060969	3.544650793	-0.10354182	-14.4226913
F595	L	0.75	-3.64202118	-10.1787252	-0.08060969	3.544650793	-0.04308452	-6.43708086
F595	L	1.5	-3.64202118	-8.06934929	-0.08060969	3.544650793	0.017372781	0.49384129
F595	L	2.25	-3.64202118	-5.95997286	-0.08060969	3.544650793	0.077830084	5.666949272
F595	L	3	-3.64202118	-5.25684786	-0.08060969	3.544650793	0.13828738	9.785368919
F595	EX	0	0.13020809	0.376184374	-0.81914473	-1.81432164	-1.83149362	0.501175761
F595	EX	0.75	0.13020809	0.376184374	-0.81914473	-1.81432164	-1.21713483	0.219037339
F595	EX	1.5	0.13020809	0.376184374	-0.81914473	-1.81432164	-0.60277593	-0.06310111
F595	EX	2.25	0.13020809	0.376184374	-0.81914473	-1.81432164	0.011582929	-0.34523955
F595	EX	3	0.13020809	0.376184374	-0.81914473	-1.81432164	0.625941813	-0.62737799
F595	EY	0	-42.6709633	5.060972214	0.832079768	-0.00028888	1.625713468	15.26775551
F595	EY	0.75	-42.6709633	5.060972214	0.832079768	-0.00028888	1.001653314	11.47202587
F595	EY	1.5	-42.6709633	5.060972214	0.832079768	-0.00028888	0.37759316	7.67629385
F595	EY	2.25	-42.6709633	5.060972214	0.832079768	-0.00028888	-0.24646702	3.880562782
F595	EY	3	-42.6709633	5.060972214	0.832079768	-0.00028888	-0.87052715	0.084831282
F595	COMB1	0	-22.6757164	-68.4675217	-3.29901004	16.25323677	-7.46319151	-86.7210693
F595	COMB1	0.75	-22.6757164	-61.5341377	-3.29901004	16.25323677	-4.98893309	-37.5492477
F595	COMB1	1.5	-22.6757164	-47.8620071	-3.29901004	16.25323677	-2.51467419	3.895502567
F595	COMB1	2.25	-22.6757164	-34.1898766	-3.29901004	16.25323677	-0.0404155	34.24380493
F595	COMB1	3	-22.6757164	-27.2564983	-3.29901004	16.25323677	2.433843374	56.86503601
F595	COMB2	0	-29.1962471	-46.1187134	-3.38488197	8.497722626	-7.80144596	-54.9042511
F595	COMB2	0.75	-29.1962471	-40.8148994	-3.38488197	8.497722626	-5.26278353	-22.0309677
F595	COMB2	1.5	-29.1962471	-31.1404572	-3.38488197	8.497722626	-2.72412086	5.225470066
F595	COMB2	2.25	-29.1962471	-21.4660149	-3.38488197	8.497722626	-0.18545797	24.67974281
F595	COMB2	3	-29.1962471	-16.162199	-3.38488197	8.497722626	2.353204966	38.51716614
F595	COMB3	0	-60.6531563	-42.6697502	-2.18351912	9.803822517	-5.28787136	-44.0433006
F595	COMB3	0.75	-60.6531563	-37.3659363	-2.18351912	9.803822517	-3.65023136	-13.7567348
F595	COMB3	1.5	-60.6531563	-27.6914959	-2.18351912	9.803822517	-2.01259112	10.91297817
F595	COMB3	2.25	-60.6531563	-18.0170517	-2.18351912	9.803822517	-0.37495095	27.78052902
F595	COMB3	3	-60.6531563	-12.7132378	-2.18351912	9.803822517	1.262689352	39.03123093
F596	D	0	-13.5316505	-84.7937469	-3.81056929	-0.34192502	-7.67207146	-107.732613
F596	D	0.75	-13.5316505	-78.0831223	-3.81056929	-0.34192502	-4.81414318	-46.1861763
F596	D	1.5	-13.5316505	-63.8912468	-3.81056929	-0.34192502	-1.95621443	7.521819592
F596	D	2.25	-13.5316505	-49.6993637	-3.81056929	-0.34192502	0.901714087	49.65074539
F596	D	3	-13.5316505	-42.9887352	-3.81056929	-0.34192502	3.759642601	83.94121552
F596	L	0	-6.08122206	-35.5885849	0.045526154	0.274279237	0.091231853	-43.8452797

F596	L	0.75	-6.08122206	-32.9167061	0.045526154	0.274279237	0.057087217	-17.8217964
F596	L	1.5	-6.08122206	-24.9010773	0.045526154	0.274279237	0.022942588	4.193867683
F596	L	2.25	-6.08122206	-16.8854485	0.045526154	0.274279237	-0.01120205	19.52983665
F596	L	3	-6.08122206	-14.2135706	0.045526154	0.274279237	-0.04534668	30.85799026
F596	EX	0	-0.09847608	0.070680641	-0.67972326	-1.79026103	-1.50158477	0.136216357
F596	EX	0.75	-0.09847608	0.070680641	-0.67972326	-1.79026103	-0.99179202	0.083205841
F596	EX	1.5	-0.09847608	0.070680641	-0.67972326	-1.79026103	-0.48199922	0.030195333
F596	EX	2.25	-0.09847608	0.070680641	-0.67972326	-1.79026103	0.027793543	-0.02281518
F596	EX	3	-0.09847608	0.070680641	-0.67972326	-1.79026103	0.537586331	-0.07582568
F596	EY	0	-41.6483841	5.235974789	1.110331535	-0.00012098	2.095760822	15.71067524
F596	EY	0.75	-41.6483841	5.235974789	1.110331535	-0.00012098	1.263011694	11.78369141
F596	EY	1.5	-41.6483841	5.235974789	1.110331535	-0.00012098	0.430262536	7.85670805
F596	EY	2.25	-41.6483841	5.235974789	1.110331535	-0.00012098	-0.40248659	3.929724932
F596	EY	3	-41.6483841	5.235974789	1.110331535	-0.00012098	-1.23523569	0.002741852
F596	COMB1	0	-25.9679356	-158.694229	-4.49984121	0.028536759	-9.06051445	-199.43158
F596	COMB1	0.75	-25.9679356	-146.366486	-4.49984121	0.028536759	-5.68563223	-83.9382858
F596	COMB1	1.5	-25.9679356	-116.511215	-4.49984121	0.028536759	-2.31074929	15.73637199
F596	COMB1	2.25	-25.9679356	-86.6559525	-4.49984121	0.028536759	1.064133644	90.82862854
F596	COMB1	3	-25.9679356	-74.3281937	-4.49984121	0.028536759	4.439016342	150.1022491
F596	COMB2	0	-29.3449821	-98.5213547	-4.34051609	-2.12558174	-8.92091274	-121.84066
F596	COMB2	0.75	-29.3449821	-90.6335602	-4.34051609	-2.12558174	-5.66552401	-50.3113708
F596	COMB2	1.5	-29.3449821	-73.2071609	-4.34051609	-2.12558174	-2.41013479	11.72509384
F596	COMB2	2.25	-29.3449821	-55.7807617	-4.34051609	-2.12558174	0.845254183	59.4994278
F596	COMB2	3	-29.3449821	-47.8929596	-4.34051609	-2.12558174	4.100643158	97.78092957
F596	COMB3	0	-59.885643	-94.7238007	-3.03502178	-0.83668256	-6.29938745	-110.391396
F596	COMB3	0.75	-59.885643	-86.8360062	-3.03502178	-0.83668256	-4.02311993	-41.7102661
F596	COMB3	1.5	-59.885643	-69.4096069	-3.03502178	-0.83668256	-1.7468524	17.47803307
F596	COMB3	2.25	-59.885643	-51.9832077	-3.03502178	-0.83668256	0.52941519	62.40420532
F596	COMB3	3	-59.885643	-44.0954094	-3.03502178	-0.83668256	2.805682659	97.83753967
F597	D	0	-10.2440872	-89.4877243	-2.66415262	-13.3925543	-5.91373301	-99.7666626
F597	D	0.75	-10.2440872	-75.277092	-2.66415262	-13.3925543	-3.91561747	-37.5122452
F597	D	1.5	-10.2440872	-53.5852051	-2.66415262	-13.3925543	-1.91750193	11.27872181
F597	D	2.25	-10.2440872	-31.893322	-2.66415262	-13.3925543	0.080613598	42.86560822
F597	D	3	-10.2440872	-17.6826897	-2.66415262	-13.3925543	2.078729153	60.98904037
F597	L	0	-4.57186556	-27.2164898	0.12220078	-4.16487265	0.203316152	-31.3133678
F597	L	0.75	-4.57186556	-24.5446129	0.12220078	-4.16487265	0.111665517	-11.5689592
F597	L	1.5	-4.57186556	-16.5289841	0.12220078	-4.16487265	0.020014882	4.16763258
F597	L	2.25	-4.57186556	-8.5133543	0.12220078	-4.16487265	-0.07163575	13.22452927
F597	L	3	-4.57186556	-5.84147787	0.12220078	-4.16487265	-0.16328639	18.27360916
F597	EX	0	1.435780764	-0.51987052	-0.39050725	-1.45383739	-1.11061454	-0.86575681
F597	EX	0.75	1.435780764	-0.51987052	-0.39050725	-1.45383739	-0.81773394	-0.47585377
F597	EX	1.5	1.435780764	-0.51987052	-0.39050725	-1.45383739	-0.52485335	-0.08595068
F597	EX	2.25	1.435780764	-0.51987052	-0.39050725	-1.45383739	-0.23197274	0.303952426
F597	EX	3	1.435780764	-0.51987052	-0.39050725	-1.45383739	0.060907856	0.693855524
F597	EY	0	-41.6592445	5.24465847	0.374541253	0.002997076	0.717025101	15.73068428
F597	EY	0.75	-41.6592445	5.24465847	0.374541253	0.002997076	0.43611896	11.79718685
F597	EY	1.5	-41.6592445	5.24465847	0.374541253	0.002997076	0.155212834	7.86369133
F597	EY	2.25	-41.6592445	5.24465847	0.374541253	0.002997076	-0.12569328	3.930194855
F597	EY	3	-41.6592445	5.24465847	0.374541253	0.002997076	-0.40659937	-0.00330128
F597	COMB1	0	-19.6078892	-150.931656	-3.00146198	-22.7348614	-6.77117348	-169.821381
F597	COMB1	0.75	-19.6078892	-129.603897	-3.00146198	-22.7348614	-4.52007627	-63.5250282
F597	COMB1	1.5	-19.6078892	-90.7486191	-3.00146198	-22.7348614	-2.2689786	20.20267868
F597	COMB1	2.25	-19.6078892	-51.8933525	-3.00146198	-22.7348614	-0.01788088	72.59797668
F597	COMB1	3	-19.6078892	-30.5655918	-3.00146198	-22.7348614	2.233216763	102.4246292
F597	COMB2	0	-23.8330593	-101.421303	-3.04506159	-16.8778934	-7.06899834	-110.559601
F597	COMB2	0.75	-23.8330593	-85.6585007	-3.04506159	-16.8778934	-4.78520107	-39.8084755
F597	COMB2	1.5	-23.8330593	-60.3570938	-3.04506159	-16.8778934	-2.50140357	15.54356575
F597	COMB2	2.25	-23.8330593	-35.0556908	-3.04506159	-16.8778934	-0.21760614	50.72721863
F597	COMB2	3	-23.8330593	-19.2928886	-3.04506159	-16.8778934	2.066191196	70.51177979
F597	COMB3	0	-55.4863663	-97.1921768	-2.4886086	-15.828928	-5.74234247	-98.3741989
F597	COMB3	0.75	-55.4863663	-81.4293671	-2.4886086	-15.828928	-3.87588501	-30.7949276
F597	COMB3	1.5	-55.4863663	-56.127964	-2.4886086	-15.828928	-2.00942779	21.38526344
F597	COMB3	2.25	-55.4863663	-30.826561	-2.4886086	-15.828928	-0.14297032	53.39706421
F597	COMB3	3	-55.4863663	-15.0637569	-2.4886086	-15.828928	1.72348702	70.00978088
F598	D	0	0.15643923	-35.9255142	-1.42650926	0.001238771	-3.61639786	-25.7419987
F598	D	1.25	0.15643923	-23.2848892	-1.42650926	0.001238771	-1.83326161	13.42921734
F598	D	2.5	0.15643923	3.486979246	-1.42650926	0.001238771	-0.05012498	26.02804184
F598	D	3.75	0.15643923	30.25884819	-1.42650926	0.001238771	1.733011603	4.711769104
F598	D	5	0.15643923	42.89947128	-1.42650926	0.001238771	3.51614809	-43.1768951
F598	L	0	-0.19784939	-11.8426952	0.020062247	0.002099832	0.051056579	-8.31353664
F598	L	1.25	-0.19784939	-7.93644476	0.020062247	0.002099832	0.025978766	4.862227917
F598	L	2.5	-0.19784939	1.282305598	0.020062247	0.002099832	0.000900957	9.105700493
F598	L	3.75	-0.19784939	10.50105572	0.020062247	0.002099832	-0.02417685	1.656463385
F598	L	5	-0.19784939	14.40730572	0.020062247	0.002099832	-0.04925466	-14.7250662
F598	EX	0	-1.43350756	0.931744337	0.249374598	-0.00398528	0.611703217	2.822480917
F598	EX	1.25	-1.43350756	0.931744337	0.249374598	-0.00398528	0.299984962	1.657800198
F598	EX	2.5	-1.43350756	0.931744337	0.249374598	-0.00398528	-0.0117333	0.493119687
F598	EX	3.75	-1.43350756	0.931744337	0.249374598	-0.00398528	-0.32345155	-0.67156082
F598	EX	5	-1.43350756	0.931744337	0.249374598	-0.00398528	-0.6351698	-1.83624136
F598	EY	0	0.021324465	0.001038062	0.331025541	-0.00015113	0.837488174	0.002006059
F598	EY	1.25	0.021324465	0.001038062	0.331025541	-0.00015113	0.423706293	0.000708481
F598	EY	2.5	0.021324465	0.001038062	0.331025541	-0.00015113	0.009924364	-0.0005891
F598	EY	3.75	0.021324465	0.001038062	0.331025541	-0.00015113	-0.40385756	-0.00188667
F598	EY	5	0.021324465	0.001038062	0.331025541	-0.00015113	-0.81763947	-0.00318425

F598	COMB1	0	-0.12883195	-62.0589294	-1.67971146	0.004846256	-4.25798702	-44.1920547
F598	COMB1	1.25	-0.12883195	-40.6401787	-1.67971146	0.004846256	-2.15834785	23.89462662
F598	COMB1	2.5	-0.12883195	6.236064434	-1.67971146	0.004846256	-0.05870844	45.80277252
F598	COMB1	3.75	-0.12883195	53.1123085	-1.67971146	0.004846256	2.040930986	8.30446434
F598	COMB1	5	-0.12883195	74.53105164	-1.67971146	0.004846256	4.140570164	-75.3723831
F598	COMB2	0	-1.37502456	-40.4875565	-1.1291393	-0.00221021	-2.88421345	-26.7259617
F598	COMB2	1.25	-1.37502456	-25.9844322	-1.1291393	-0.00221021	-1.47278941	17.34832764
F598	COMB2	2.5	-1.37502456	5.02993679	-1.1291393	-0.00221021	-0.06136522	30.70793343
F598	COMB2	3.75	-1.37502456	36.04430771	-1.1291393	-0.00221021	1.350059032	4.773483753
F598	COMB2	5	-1.37502456	50.54742813	-1.1291393	-0.00221021	2.761482954	-51.8756485
F598	COMB3	0	-0.32722557	-41.15765	-1.06538522	0.000548111	-2.70908594	-28.7566738
F598	COMB3	1.25	-0.32722557	-26.6545258	-1.06538522	0.000548111	-1.3773545	16.15523148
F598	COMB3	2.5	-0.32722557	4.359844208	-1.06538522	0.000548111	-0.04562284	30.35245514
F598	COMB3	3.75	-0.32722557	35.37421417	-1.06538522	0.000548111	1.286108851	5.255620956
F598	COMB3	5	-0.32722557	49.87733459	-1.06538522	0.000548111	2.61784029	-50.5558968
F599	D	0	0.293549329	-43.0934639	-1.46528566	-0.08664155	-3.57883334	-43.6267204
F599	D	1.25	0.293549329	-30.4528446	-1.46528566	-0.08664155	-1.74722612	4.504441261
F599	D	2.5	0.293549329	-3.68097496	-1.46528566	-0.08664155	0.084381171	26.06320953
F599	D	3.75	0.293549329	23.0908947	-1.46528566	-0.08664155	1.915988564	13.70687962
F599	D	5	0.293549329	35.73151398	-1.46528566	-0.08664155	3.747595787	-25.2218437
F599	L	0	-0.20521678	-14.2661953	0.023012552	-0.02494191	0.057462689	-14.5197659
F599	L	1.25	-0.20521678	-10.3599463	0.023012552	-0.02494191	0.028696999	1.685375333
F599	L	2.5	-0.20521678	-1.14119554	0.023012552	-0.02494191	-6.8691E-05	8.958224297
F599	L	3.75	-0.20521678	8.077554703	0.023012552	-0.02494191	-0.02883438	4.538363934
F599	L	5	-0.20521678	11.9838047	0.023012552	-0.02494191	-0.05760007	-8.81378841
F599	EX	0	-1.24002075	0.825454056	0.317625731	0.01878392	0.752426088	1.78891325
F599	EX	1.25	-1.24002075	0.825454056	0.317625731	0.01878392	0.355393946	0.757095695
F599	EX	2.5	-1.24002075	0.825454056	0.317625731	0.01878392	-0.04163825	-0.27472186
F599	EX	3.75	-1.24002075	0.825454056	0.317625731	0.01878392	-0.43867046	-1.30653942
F599	EX	5	-1.24002075	0.825454056	0.317625731	0.01878392	-0.8357026	-2.33835697
F599	EY	0	0.048221599	-0.00217349	0.676951289	-0.00363671	1.683871269	-0.00596078
F599	EY	1.25	0.048221599	-0.00217349	0.676951289	-0.00363671	0.837682009	-0.00324392
F599	EY	2.5	0.048221599	-0.00217349	0.676951289	-0.00363671	-0.00850719	-0.00052707
F599	EY	3.75	0.048221599	-0.00217349	0.676951289	-0.00363671	-0.85469639	0.002189793
F599	EY	5	0.048221599	-0.00217349	0.676951289	-0.00363671	-1.70088565	0.004906651
F599	COMB1	0	0.023912352	-74.5380707	-1.72152281	-0.14387691	-4.20265961	-75.5836868
F599	COMB1	1.25	0.023912352	-53.1193275	-1.72152281	-0.14387691	-2.05075598	8.101929665
F599	COMB1	2.5	0.023912352	-6.243083	-1.72152281	-0.14387691	0.101147503	45.60900879
F599	COMB1	3.75	0.023912352	40.63315964	-1.72152281	-0.14387691	2.253051281	23.7096386
F599	COMB1	5	0.023912352	62.05190659	-1.72152281	-0.14387691	4.40495491	-44.3682709
F599	COMB2	0	-1.02464819	-48.8883286	-0.98931873	-0.08053453	-2.43049383	-48.532135
F599	COMB2	1.25	-1.02464819	-34.3852081	-0.98931873	-0.08053453	-1.19384527	6.04312849
F599	COMB2	2.5	-1.02464819	-3.37084007	-0.98931873	-0.08053453	0.042803247	29.9037075
F599	COMB2	3.75	-1.02464819	27.64352989	-0.98931873	-0.08053453	1.279451847	14.47022915
F599	COMB2	5	-1.02464819	42.14664841	-0.98931873	-0.08053453	2.516100407	-31.6779327
F599	COMB3	0	-0.09639034	-49.4842529	-0.72045004	-0.09673193	-1.73459518	-49.8245316
F599	COMB3	1.25	-0.09639034	-34.9811325	-0.72045004	-0.09673193	-0.83403265	5.495635509
F599	COMB3	2.5	-0.09639034	-3.96676445	-0.72045004	-0.09673193	0.066530004	30.10112
F599	COMB3	3.75	-0.09639034	27.04760551	-0.72045004	-0.09673193	0.967092752	15.41254711
F599	COMB3	5	-0.09639034	41.55072403	-0.72045004	-0.09673193	1.867655277	-29.9907093
F600	D	0	0.305242211	-35.6386414	1.467301488	0.087055475	3.752803564	-25.088562
F600	D	1.25	0.305242211	-22.9980202	1.467301488	0.087055475	1.918676257	13.72406769
F600	D	2.5	0.305242211	3.773849249	1.467301488	0.087055475	0.08454933	25.96430588
F600	D	3.75	0.305242211	30.54571915	1.467301488	0.087055475	-1.74957776	4.289444447
F600	D	5	0.305242211	43.18634415	1.467301488	0.087055475	-3.58370471	-43.9578094
F600	L	0	-0.20699768	-12.083436	-0.01833585	0.0257641	-0.045539	-9.0661478
F600	L	1.25	-0.20699768	-8.17718601	-0.01833585	0.0257641	-0.02261917	4.410543442
F600	L	2.5	-0.20699768	1.041564584	-0.01833585	0.0257641	0.000300644	8.954942703
F600	L	3.75	-0.20699768	10.26031494	-0.01833585	0.0257641	0.023220463	1.806631804
F600	L	5	-0.20699768	14.1665659	-0.01833585	0.0257641	0.04614028	-14.2739706
F600	EX	0	-0.34741324	0.824670494	0.288407624	0.018659595	0.745317459	2.34488225
F600	EX	1.25	-0.34741324	0.824670494	0.288407624	0.018659595	0.384807885	1.314044118
F600	EX	2.5	-0.34741324	0.824670494	0.288407624	0.018659595	0.024298362	0.283205956
F600	EX	3.75	-0.34741324	0.824670494	0.288407624	0.018659595	-0.33621117	-0.74763221
F600	EX	5	-0.34741324	0.824670494	0.288407624	0.018659595	-0.69672078	-1.7784704
F600	EY	0	0.048213974	0.002173488	-0.67695254	0.003636824	-1.70088911	0.004906657
F600	EY	1.25	0.048213974	0.002173488	-0.67695254	0.003636824	-0.85469824	0.002189797
F600	EY	2.5	0.048213974	0.002173488	-0.67695254	0.003636824	-0.0085075	-0.00052706
F600	EY	3.75	0.048213974	0.002173488	-0.67695254	0.003636824	0.83768326	-0.00324393
F600	EY	5	0.048213974	0.002173488	-0.67695254	0.003636824	1.683874011	-0.00596079
F600	COMB1	0	0.035094369	-62.0998688	1.731424451	0.14568913	4.430501938	-44.6121101
F600	COMB1	1.25	0.035094369	-40.6811218	1.731424451	0.14568913	2.266220808	23.52575111
F600	COMB1	2.5	0.035094369	6.195122242	1.731424451	0.14568913	0.10194023	45.48507309
F600	COMB1	3.75	0.035094369	53.07136536	1.731424451	0.14568913	-2.0623405	8.03794384
F600	COMB1	5	0.035094369	74.49011993	1.731424451	0.14568913	-4.22662115	-75.5877228
F600	COMB2	0	-0.08908525	-40.3726387	1.620152593	0.11998222	4.16172266	-26.7703266
F600	COMB2	1.25	-0.08908525	-25.8695164	1.620152593	0.11998222	2.136531353	17.16031837
F600	COMB2	2.5	-0.08908525	5.144853115	1.620152593	0.11998222	0.111340441	30.37627983
F600	COMB2	3.75	-0.08908525	36.15922165	1.620152593	0.11998222	-1.91385055	4.298184395
F600	COMB2	5	-0.08908525	50.66234589	1.620152593	0.11998222	-3.93904138	-52.4945946
F600	COMB3	0	0.196489558	-40.9648018	0.914938986	0.109220378	2.374940395	-28.4550362
F600	COMB3	1.25	0.196489558	-26.4616814	0.914938986	0.109220378	1.231266379	16.21581459
F600	COMB3	2.5	0.196489558	4.552688122	0.914938986	0.109220378	0.087592609	30.17198372
F600	COMB3	3.75	0.196489558	35.56705856	0.914938986	0.109220378	-1.0560813	4.834095478

F600	COMB3	5	0.196489558	50.0701828	0.914938986	0.109220378	-2.19975495	-51.2184753
F601	D	0	0.170157939	-43.0976906	1.426903844	-0.00101628	3.517051935	-43.733654
F601	D	1.25	0.170157939	-30.4570675	1.426903844	-0.00101628	1.73342216	4.402787209
F601	D	2.5	0.170157939	-3.68519855	1.426903844	-0.00101628	-0.05020782	25.96683502
F601	D	3.75	0.170157939	23.08667183	1.426903844	-0.00101628	-1.83383787	13.61578369
F601	D	5	0.170157939	35.72729492	1.426903844	-0.00101628	-3.61746764	-25.3076591
F601	L	0	-0.19705851	-14.4223604	-0.01564478	-0.00208694	-0.03838731	-14.7266111
F601	L	1.25	-0.19705851	-10.5161095	-0.01564478	-0.00208694	-0.01883134	1.673734903
F601	L	2.5	-0.19705851	-1.29735911	-0.01564478	-0.00208694	0.000724635	9.141788483
F601	L	3.75	-0.19705851	7.92139101	-0.01564478	-0.00208694	0.020280607	4.917132378
F601	L	5	-0.19705851	11.82764149	-0.01564478	-0.00208694	0.039836578	-8.23981571
F601	EX	0	-0.25650963	0.920786619	0.268813729	-0.00351903	0.660530269	1.811156154
F601	EX	1.25	-0.25650963	0.920786619	0.268813729	-0.00351903	0.324513048	0.66017288
F601	EX	2.5	-0.25650963	0.920786619	0.268813729	-0.00351903	-0.01150411	-0.49081042
F601	EX	3.75	-0.25650963	0.920786619	0.268813729	-0.00351903	-0.34752131	-1.64179385
F601	EX	5	-0.25650963	0.920786619	0.268813729	-0.00351903	-0.6835385	-2.79277706
F601	EY	0	0.021321842	-0.00103806	-0.33102468	0.00015118	-0.81763726	-0.00318425
F601	EY	1.25	0.021321842	-0.00103806	-0.33102468	0.00015118	-0.40385646	-0.00188667
F601	EY	2.5	0.021321842	-0.00103806	-0.33102468	0.00015118	0.009924422	-0.00058909
F601	EY	3.75	0.021321842	-0.00103806	-0.33102468	0.00015118	0.42370528	0.000708485
F601	EY	5	0.021321842	-0.00103806	-0.33102468	0.00015118	0.837486148	0.002006064
F601	COMB1	0	-0.11110409	-74.7930069	1.687252998	-0.00455865	4.159042835	-76.0429611
F601	COMB1	1.25	-0.11110409	-53.3742561	1.687252998	-0.00455865	2.049976349	7.9613204
F601	COMB1	2.5	-0.11110409	-6.49801254	1.687252998	-0.00455865	-0.05908997	45.7870636
F601	COMB1	3.75	-0.11110409	40.37823105	1.687252998	-0.00455865	-2.16815639	24.20635223
F601	COMB1	5	-0.11110409	61.796978	1.687252998	-0.00455865	-4.27722263	-43.5528946
F601	COMB2	0	-0.14217867	-48.8429298	1.667270422	-0.00531906	4.10690546	-48.6856728
F601	COMB2	1.25	-0.14217867	-34.3398094	1.667270422	-0.00531906	2.022817612	5.832837582
F601	COMB2	2.5	-0.14217867	-3.32543945	1.667270422	-0.00531906	-0.06127051	29.63666534
F601	COMB2	3.75	-0.14217867	27.68893051	1.667270422	-0.00531906	-2.1453588	14.14643574
F601	COMB2	5	-0.14217867	42.19205475	1.667270422	-0.00531906	-4.22944689	-32.0584755
F601	COMB3	0	0.058179811	-49.5066605	1.230421424	-0.00267424	3.03036046	-49.9920464
F601	COMB3	1.25	0.058179811	-35.0035362	1.230421424	-0.00267424	1.492333651	5.356126308
F601	COMB3	2.5	0.058179811	-3.98916888	1.230421424	-0.00267424	-0.0456931	29.98961639
F601	COMB3	3.75	0.058179811	27.02519989	1.230421424	-0.00267424	-1.58371997	15.32904816
F601	COMB3	5	0.058179811	41.52832413	1.230421424	-0.00267424	-3.12174678	-30.0462017
F602	D	0	-9.62888145	18.12288475	2.498205185	-12.1337337	1.544614792	54.5663681
F602	D	0.75	-9.62888145	30.4631958	2.498205185	-12.1337337	-0.32903841	36.5803833
F602	D	1.5	-9.62888145	46.54412842	2.498205185	-12.1337337	-2.20269179	7.936433315
F602	D	2.25	-9.62888145	62.62506104	2.498205185	-12.1337337	-4.07634497	-33.2357903
F602	D	3	-9.62888145	74.96537018	2.498205185	-12.1337337	-5.9499979	-85.0659714
F602	L	0	-2.31273103	5.96911478	0.066331729	-4.11686468	0.114066549	11.36475182
F602	L	0.75	-2.31273103	6.67223978	0.066331729	-4.11686468	0.064317763	6.712136269
F602	L	1.5	-2.31273103	8.78161335	0.066331729	-4.11686468	0.014568976	1.00483346
F602	L	2.25	-2.31273103	10.8909874	0.066331729	-4.11686468	-0.03517981	-6.46028042
F602	L	3	-2.31273103	11.59411335	0.066331729	-4.11686468	-0.08492859	-14.9800816
F602	EX	0	-1.04623187	-0.40171039	0.374468058	1.364875674	0.542154729	-0.69801348
F602	EX	0.75	-1.04623187	-0.40171039	0.374468058	1.364875674	0.261303753	-0.39673081
F602	EX	1.5	-1.04623187	-0.40171039	0.374468058	1.364875674	-0.01954721	-0.09544814
F602	EX	2.25	-1.04623187	-0.40171039	0.374468058	1.364875674	-0.30039817	0.205834538
F602	EX	3	-1.04623187	-0.40171039	0.374468058	1.364875674	-0.58124912	0.507117212
F602	EY	0	-41.3282242	5.243618965	-0.39586529	-0.00099095	-0.43089113	-0.00315014
F602	EY	0.75	-41.3282242	5.243618965	-0.39586529	-0.00099095	-0.13399225	-3.93586349
F602	EY	1.5	-41.3282242	5.243618965	-0.39586529	-0.00099095	0.162906617	-7.86857605
F602	EY	2.25	-41.3282242	5.243618965	-0.39586529	-0.00099095	0.459805489	-11.8012896
F602	EY	3	-41.3282242	5.243618965	-0.39586529	-0.00099095	0.75670433	-15.7340021
F602	COMB1	0	-15.2550278	31.29804611	3.103976965	-21.1474648	2.036044359	83.66324615
F602	COMB1	0.75	-15.2550278	47.23141861	3.103976965	-21.1474648	-0.29193768	54.6358757
F602	COMB1	1.5	-15.2550278	69.90353394	3.103976965	-21.1474648	-2.61991954	11.13145351
F602	COMB1	2.25	-15.2550278	92.57565308	3.103976965	-21.1474648	-4.94790173	-50.2193947
F602	COMB1	3	-15.2550278	108.5090256	3.103976965	-21.1474648	-7.2758832	-126.047295
F602	COMB2	0	-24.9400768	22.1452713	2.906886816	-12.6248989	2.083175898	60.15114594
F602	COMB2	0.75	-24.9400768	35.32408142	2.906886816	-12.6248989	-0.0969884	38.87331009
F602	COMB2	1.5	-24.9400768	52.87351227	2.906886816	-12.6248989	-2.27715278	6.072387218
F602	COMB2	2.25	-24.9400768	70.42294312	2.906886816	-12.6248989	-4.45731735	-40.4369354
F602	COMB2	3	-24.9400768	83.60175323	2.906886816	-12.6248989	-6.63748121	-98.4693375
F602	COMB3	0	-54.5630341	26.28856277	2.346308708	-13.6083374	1.376119614	60.65140152
F602	COMB3	0.75	-54.5630341	39.46737289	2.346308708	-13.6083374	-0.38361141	36.26609802
F602	COMB3	1.5	-54.5630341	57.01680374	2.346308708	-13.6083374	-2.14334249	0.357706338
F602	COMB3	2.25	-54.5630341	74.5662384	2.346308708	-13.6083374	-3.90307355	-49.2590828
F602	COMB3	3	-54.5630341	87.74504852	2.346308708	-13.6083374	-5.66280413	-110.398956
F603	D	0	-13.4340963	43.1459198	3.670484066	0.004816906	3.333815575	83.80753326
F603	D	0.75	-13.4340963	49.85654449	3.670484066	0.004816906	0.5809533	49.39919281
F603	D	1.5	-13.4340963	64.04841614	3.670484066	0.004816906	-2.17190909	7.152425766
F603	D	2.25	-13.4340963	78.24028015	3.670484066	0.004816906	-4.92477131	-46.6733971
F603	D	3	-13.4340963	84.95090485	3.670484066	0.004816906	-7.67763329	-108.337654
F603	L	0	-4.5793395	14.40243149	-0.04912797	0.058352344	-0.0551429	26.49697685
F603	L	0.75	-4.5793395	15.80868053	-0.04912797	0.058352344	-0.01829694	15.34359455
F603	L	1.5	-4.5793395	20.02742958	-0.04912797	0.058352344	0.018549027	2.080839157
F603	L	2.25	-4.5793395	24.24617767	-0.04912797	0.058352344	0.055394992	-14.6975403
F603	L	3	-4.5793395	25.65242767	-0.04912797	0.058352344	0.092240959	-33.5852928
F603	EX	0	-0.13130115	0.027904319	-0.79174674	1.838475823	-1.01768708	0.060936026
F603	EX	0.75	-0.13130115	0.027904319	-0.79174674	1.838475823	-0.42387721	0.0400078
F603	EX	1.5	-0.13130115	0.027904319	-0.79174674	1.838475823	0.169932634	0.019079566

F603	EX	2.25	-0.13130115	0.027904319	-0.79174674	1.838475823	0.763742447	-0.00184867
F603	EX	3	-0.13130115	0.027904319	-0.79174674	1.838475823	1.35755229	-0.0227769
F603	EY	0	-41.3024559	5.239187241	-1.13722634	-0.00265551	-1.26627982	0.006227472
F603	EY	0.75	-41.3024559	5.239187241	-1.13722634	-0.00265551	-0.41336033	-3.92316175
F603	EY	1.5	-41.3024559	5.239187241	-1.13722634	-0.00265551	0.439559132	-7.85255146
F603	EY	2.25	-41.3024559	5.239187241	-1.13722634	-0.00265551	1.292478681	-11.7819405
F603	EY	3	-41.3024559	5.239187241	-1.13722634	-0.00265551	2.14539814	-15.7113304
F603	COMB1	0	-23.4478588	74.81899261	4.325976372	0.099144042	3.912350178	142.9642029
F603	COMB1	0.75	-23.4478588	85.12174225	4.325976372	0.099144042	0.667868853	83.82878113
F603	COMB1	1.5	-23.4478588	108.9019852	4.325976372	0.099144042	-2.57661247	11.91225338
F603	COMB1	2.25	-23.4478588	132.6822205	4.325976372	0.099144042	-5.82109356	-79.5241394
F603	COMB1	3	-23.4478588	142.9849701	4.325976372	0.099144042	-9.06557465	-183.741653
F603	COMB2	0	-28.6944637	51.519207	2.660848856	1.925424814	2.030952215	96.40948486
F603	COMB2	0.75	-28.6944637	59.00832748	2.660848856	1.925424814	0.035316013	55.50799942
F603	COMB2	1.5	-28.6944637	75.23870087	2.660848856	1.925424814	-1.96032012	5.711705208
F603	COMB2	2.25	-28.6944637	91.46906281	2.660848856	1.925424814	-3.95595622	-57.3500175
F603	COMB2	3	-28.6944637	98.95819092	2.660848856	1.925424814	-5.95159197	-129.306549
F603	COMB3	0	-58.9572334	55.34991837	2.395045042	0.599770367	1.832971215	96.37019348
F603	COMB3	0.75	-58.9572334	62.83903885	2.395045042	0.599770367	0.036687758	52.59566879
F603	COMB3	1.5	-58.9572334	79.06941223	2.395045042	0.599770367	-1.75959563	-0.07365739
F603	COMB3	2.25	-58.9572334	95.29977417	2.395045042	0.599770367	-3.55587888	-66.0084152
F603	COMB3	3	-58.9572334	102.7889023	2.395045042	0.599770367	-5.35216188	-140.837982
F604	D	0	-12.5502138	19.98213768	2.936000586	16.323452	1.893089771	34.32224655
F604	D	0.75	-12.5502138	24.82244682	2.936000586	16.323452	-0.30891001	17.75432396
F604	D	1.5	-12.5502138	33.40338135	2.936000586	16.323452	-2.51090956	-3.84656644
F604	D	2.25	-12.5502138	41.98431778	2.936000586	16.323452	-4.7129097	-32.3507347
F604	D	3	-12.5502138	46.82462692	2.936000586	16.323452	-6.91490889	-65.8878632
F604	L	0	-3.40391874	6.803751945	-0.13566042	5.347767353	-0.19245796	9.384234428
F604	L	0.75	-3.40391874	7.436563969	-0.13566042	5.347767353	-0.09071266	4.123218536
F604	L	1.5	-3.40391874	9.335000038	-0.13566042	5.347767353	0.01103263	-2.08701468
F604	L	2.25	-3.40391874	11.23343658	-0.13566042	5.347767353	0.112777926	-9.87927818
F604	L	3	-3.40391874	11.86624908	-0.13566042	5.347767353	0.214523226	-18.6207581
F604	EX	0	-0.28987309	0.447216183	-1.30309832	0.549945056	-1.5046593	0.646162093
F604	EX	0.75	-0.28987309	0.447216183	-1.30309832	0.549945056	-0.52733582	0.310750127
F604	EX	1.5	-0.28987309	0.447216183	-1.30309832	0.549945056	0.44998759	-0.0246619
F604	EX	2.25	-0.28987309	0.447216183	-1.30309832	0.549945056	1.427311063	-0.36007392
F604	EX	3	-0.28987309	0.447216183	-1.30309832	0.549945056	2.404634476	-0.69548595
F604	EY	0	-43.3478661	5.058805943	-0.78385729	-0.00461771	-0.83035862	0.081194788
F604	EY	0.75	-43.3478661	5.058805943	-0.78385729	-0.00461771	-0.24246582	-3.71290851
F604	EY	1.5	-43.3478661	5.058805943	-0.78385729	-0.00461771	0.345426977	-7.50701189
F604	EY	2.25	-43.3478661	5.058805943	-0.78385729	-0.00461771	0.933319747	-11.301115
F604	EY	3	-43.3478661	5.058805943	-0.78385729	-0.00461771	1.521212578	-15.0952187
F604	COMB1	0	-20.5065269	34.8645668	3.306143999	28.1445713	1.96377492	56.20147324
F604	COMB1	0.75	-20.5065269	41.68544006	3.306143999	28.1445713	-0.51583225	27.90233803
F604	COMB1	1.5	-20.5065269	55.02005768	3.306143999	28.1445713	-2.99543929	-7.95510292
F604	COMB1	2.25	-20.5065269	68.35467529	3.306143999	28.1445713	-5.47504663	-54.6277237
F604	COMB1	3	-20.5065269	75.17555237	3.306143999	28.1445713	-7.95465326	-108.85865
F604	COMB2	0	-28.2045555	25.18081856	1.444445729	19.39191055	0.108234614	39.68874741
F604	COMB2	0.75	-28.2045555	30.46247864	1.444445729	19.39191055	-0.97509933	19.09291458
F604	COMB2	1.5	-28.2045555	40.0704689	1.444445729	19.39191055	-2.05843329	-7.08653831
F604	COMB2	2.25	-28.2045555	49.67845535	1.444445729	19.39191055	-3.1417675	-41.0127716
F604	COMB2	3	-28.2045555	54.96012115	1.444445729	19.39191055	-4.22510099	-80.5226135
F604	COMB3	0	-59.8565292	28.57704544	1.806541443	18.99255562	0.581275761	39.28319168
F604	COMB3	0.75	-59.8565292	33.85870743	1.806541443	18.99255562	-0.7736299	16.14018631
F604	COMB3	1.5	-59.8565292	43.46669769	1.806541443	18.99255562	-2.12853551	-12.5864353
F604	COMB3	2.25	-59.8565292	53.07468414	1.806541443	18.99255562	-3.48344135	-49.0598373
F604	COMB3	3	-59.8565292	58.35634613	1.806541443	18.99255562	-4.83834648	-91.1168518
F605	D	0	-12.573101	19.93402481	-2.94693756	-16.2703972	-1.90898383	34.25331497
F605	D	0.75	-12.573101	24.77433586	-2.94693756	-16.2703972	0.301218688	17.72147369
F605	D	1.5	-12.573101	33.35527039	-2.94693756	-16.2703972	2.511421204	-3.84333277
F605	D	2.25	-12.573101	41.93620682	-2.94693756	-16.2703972	4.721623421	-32.3114166
F605	D	3	-12.573101	46.77651596	-2.94693756	-16.2703972	6.931826115	-65.8124619
F605	L	0	-3.660357	6.826588154	0.126387998	-5.52149677	0.183826372	9.759604454
F605	L	0.75	-3.660357	7.529712677	0.126387998	-5.52149677	0.089035407	4.4638834
F605	L	1.5	-3.660357	9.639087677	0.126387998	-5.52149677	-0.00575556	-1.88652408
F605	L	2.25	-3.660357	11.74846172	0.126387998	-5.52149677	-0.10054653	-9.99474335
F605	L	3	-3.660357	12.45158672	0.126387998	-5.52149677	-0.1953375	-19.1576481
F605	EX	0	0.418615729	-0.44848615	-0.47173145	0.530560613	-0.11937565	-0.64603758
F605	EX	0.75	0.418615729	-0.44848615	-0.47173145	0.530560613	0.234422833	-0.3096731
F605	EX	1.5	0.418615729	-0.44848615	-0.47173145	0.530560613	0.588221312	0.026691383
F605	EX	2.25	0.418615729	-0.44848615	-0.47173145	0.530560613	0.942019761	0.363055885
F605	EX	3	0.418615729	-0.44848615	-0.47173145	0.530560613	1.295818329	0.699420333
F605	EY	0	-43.3479195	5.05879879	0.783865809	0.004617776	0.830361903	0.08119446
F605	EY	0.75	-43.3479195	5.05879879	0.783865809	0.004617776	0.24246271	-3.7129035
F605	EY	1.5	-43.3479195	5.05879879	0.783865809	0.004617776	-0.34543648	-7.50700188
F605	EY	2.25	-43.3479195	5.05879879	0.783865809	0.004617776	-0.9333356	-11.3010988
F605	EY	3	-43.3479195	5.05879879	0.783865809	0.004617776	-1.52123487	-15.0951977
F605	COMB1	0	-20.9442921	34.84337234	-3.3341043	-28.3588734	-1.99665844	56.71934509
F605	COMB1	0.75	-20.9442921	41.77674484	-3.3341043	-28.3588734	0.503919065	28.40798187
F605	COMB1	1.5	-20.9442921	55.44886398	-3.3341043	-28.3588734	3.004496574	-7.63043785
F605	COMB1	2.25	-20.9442921	69.12098694	-3.3341043	-28.3588734	5.505074024	-54.7652893
F605	COMB1	3	-20.9442921	76.05435944	-3.3341043	-28.3588734	8.005651474	-109.62719
F605	COMB2	0	-27.5760956	24.21043968	-3.29579663	-18.272604	-1.80851758	38.39718246
F605	COMB2	0.75	-27.5760956	29.51425171	-3.29579663	-18.272604	0.663329184	18.52359581

F608	L	1.25	-4.87610626	-7.81127214	0.036493275	0.009250623	0.049905717	5.700235367
F608	L	2.5	-4.87610626	1.407478333	0.036493275	0.009250623	0.004289123	9.787241936
F608	L	3.75	-4.87610626	10.62622833	0.036493275	0.009250623	-0.04132747	2.181539297
F608	L	5	-4.87610626	14.53247929	0.036493275	0.009250623	-0.08694407	-14.3564548
F608	EX	0	-55.1786346	7.845630169	0.554979622	0.002883108	1.450053692	21.09516144
F608	EX	1.25	-55.1786346	7.845630169	0.554979622	0.002883108	0.756329179	11.28812408
F608	EX	2.5	-55.1786346	7.845630169	0.554979622	0.002883108	0.062604606	1.481085896
F608	EX	3.75	-55.1786346	7.845630169	0.554979622	0.002883108	-0.63111997	-8.32595253
F608	EX	5	-55.1786346	7.845630169	0.554979622	0.002883108	-1.32484448	-18.1329918
F608	EY	0	-0.03935273	0.001007525	0.50409621	0.001649977	1.421775699	0.001946722
F608	EY	1.25	-0.03935273	0.001007525	0.50409621	0.001649977	0.791655481	0.000687315
F608	EY	2.5	-0.03935273	0.001007525	0.50409621	0.001649977	0.161535144	-0.00057209
F608	EY	3.75	-0.03935273	0.001007525	0.50409621	0.001649977	-0.46858516	-0.0018315
F608	EY	5	-0.03935273	0.001007525	0.50409621	0.001649977	-1.09870553	-0.0030909
F608	COMB1	0	5.011837959	-69.4719925	-1.29749119	0.044763248	-3.37464046	-53.8580933
F608	COMB1	1.25	5.011837959	-45.8932457	-1.29749119	0.044763248	-1.75277638	22.14492607
F608	COMB1	2.5	5.011837959	3.142997503	-1.29749119	0.044763248	-0.13091241	49.26940536
F608	COMB1	3.75	5.011837959	52.17924118	-1.29749119	0.044763248	1.490951657	14.28743267
F608	COMB1	5	5.011837959	75.75799561	-1.29749119	0.044763248	3.112815857	-69.5730743
F608	COMB2	0	-47.4463501	-39.9539375	-0.44170579	0.032634676	-1.10778713	-17.3505421
F608	COMB2	1.25	-47.4463501	-23.5608158	-0.44170579	0.032634676	-0.55565494	24.87548065
F608	COMB2	2.5	-47.4463501	9.343553543	-0.44170579	0.032634676	-0.00352272	34.02431488
F608	COMB2	3.75	-47.4463501	42.2479248	-0.44170579	0.032634676	0.548609614	1.51659584
F608	COMB2	5	-47.4463501	58.64104843	-0.44170579	0.032634676	1.100741863	-64.068306
F608	COMB3	0	-7.74665689	-45.6020508	-0.4707804	0.03177157	-1.10682058	-32.5376282
F608	COMB3	1.25	-7.74665689	-29.2089291	-0.4707804	0.03177157	-0.51834518	16.74853516
F608	COMB3	2.5	-7.74665689	3.695440054	-0.4707804	0.03177157	0.070130289	32.95751572
F608	COMB3	3.75	-7.74665689	36.59981155	-0.4707804	0.03177157	0.658605814	7.509935379
F608	COMB3	5	-7.74665689	52.99293518	-0.4707804	0.03177157	1.247081399	-51.0148277
F609	D	0	17.54968643	-43.6201019	-1.05871141	-1.34624732	-2.59448099	-42.9106483
F609	D	1.25	17.54968643	-29.1794796	-1.05871141	-1.34624732	-1.2710917	4.753806114
F609	D	2.5	17.54968643	-0.60761011	-1.05871141	-1.34624732	0.052297559	23.59586906
F609	D	3.75	17.54968643	27.9642601	-1.05871141	-1.34624732	1.375686884	6.27283144
F609	D	5	17.54968643	42.40488434	-1.05871141	-1.34624732	2.699076176	-39.8725967
F609	L	0	-5.55907106	-13.1139565	0.040159162	-0.47313926	0.09652999	-12.6214876
F609	L	1.25	-5.55907106	-9.2077055	0.040159162	-0.47313926	0.046331037	2.143354177
F609	L	2.5	-5.55907106	0.011044013	0.040159162	-0.47313926	-0.00386791	7.975903511
F609	L	3.75	-5.55907106	9.229794502	0.040159162	-0.47313926	-0.05406687	2.115744114
F609	L	5	-5.55907106	13.1360445	0.040159162	-0.47313926	-0.10426582	-12.6767082
F609	EX	0	-43.79216	6.588272572	0.459635973	0.051832028	1.178645134	16.76207733
F609	EX	1.25	-43.79216	6.588272572	0.459635973	0.051832028	0.604100168	8.526737213
F609	EX	2.5	-43.79216	6.588272572	0.459635973	0.051832028	0.029555125	0.29139626
F609	EX	3.75	-43.79216	6.588272572	0.459635973	0.051832028	-0.54498988	-7.94394493
F609	EX	5	-43.79216	6.588272572	0.459635973	0.051832028	-1.11953497	-16.179285
F609	EY	0	-0.08709039	-0.00024131	1.294985652	0.034417823	3.16920352	-0.00059983
F609	EY	1.25	-0.08709039	-0.00024131	1.294985652	0.034417823	1.550471306	-0.00029819
F609	EY	2.5	-0.08709039	-0.00024131	1.294985652	0.034417823	-0.06826095	3.45452E-06
F609	EY	3.75	-0.08709039	-0.00024131	1.294985652	0.034417823	-1.68699324	0.000305097
F609	EY	5	-0.08709039	-0.00024131	1.294985652	0.034417823	-3.30572534	0.00060674
F609	COMB1	0	12.16511059	-73.3264542	-1.20619905	-2.37251949	-2.95892906	-71.6871567
F609	COMB1	1.25	12.16511059	-49.7477036	-1.20619905	-2.37251949	-1.45118046	9.133934021
F609	COMB1	2.5	12.16511059	-0.71146172	-1.20619905	-2.37251949	0.05656841	41.07648849
F609	COMB1	3.75	12.16511059	48.32478333	-1.20619905	-2.37251949	1.564317226	10.91258812
F609	COMB1	5	12.16511059	71.90353394	-1.20619905	-2.37251949	3.072066069	-68.1298523
F609	COMB2	0	-28.6762562	-43.1132202	-0.21535309	-1.49811077	-0.47560117	-31.6833878
F609	COMB2	1.25	-28.6762562	-26.7200947	-0.21535309	-1.49811077	-0.20640992	14.4917326
F609	COMB2	2.5	-28.6762562	6.184274197	-0.21535309	-1.49811077	0.062781401	27.58966827
F609	COMB2	3.75	-28.6762562	39.08864594	-0.21535309	-1.49811077	0.331972778	-0.9689545
F609	COMB2	5	-28.6762562	55.48176575	-0.21535309	-1.49811077	0.601163983	-62.6047592
F609	COMB3	0	2.790088654	-47.8569527	0.405523509	-1.51013279	1.005138874	-43.7525253
F609	COMB3	1.25	2.790088654	-31.4638271	0.405523509	-1.51013279	0.498234361	8.352262497
F609	COMB3	2.5	2.790088654	1.440540791	0.405523509	-1.51013279	-0.00867009	27.37986565
F609	COMB3	3.75	2.790088654	34.34491348	0.405523509	-1.51013279	-0.51557451	4.750909805
F609	COMB3	5	2.790088654	50.73803329	0.405523509	-1.51013279	-1.02247906	-50.9552269
F610	D	0	26.23682976	-42.9498177	0.0006101	-0.00052977	-0.89176941	-45.0593643
F610	D	1.25	26.23682976	-28.5091934	0.0006101	-0.00052977	-0.89253205	1.767229319
F610	D	2.5	26.23682976	0.062676288	0.0006101	-0.00052977	-0.89329469	19.77143288
F610	D	3.75	26.23682976	28.63454628	0.0006101	-0.00052977	-0.89405727	1.610538602
F610	D	5	26.23682976	43.07516861	0.0006101	-0.00052977	-0.89481992	-45.3727493
F610	L	0	-4.02546358	-12.9490461	0.001221434	0.011169318	0.038637143	-13.9953051
F610	L	1.25	-4.02546358	-9.04279613	0.001221434	0.011169318	0.037110351	0.563399494
F610	L	2.5	-4.02546358	0.175954372	0.001221434	0.011169318	0.035583556	6.18981123
F610	L	3.75	-4.02546358	9.394703865	0.001221434	0.011169318	0.034056764	0.123513527
F610	L	5	-4.02546358	13.30095482	0.001221434	0.011169318	0.032529976	-14.8750753
F610	EX	0	-29.882122	6.195717812	0.591672301	-0.09196886	1.598413467	15.4945116
F610	EX	1.25	-29.882122	6.195717812	0.591672301	-0.09196886	0.858823001	7.749864101
F610	EX	2.5	-29.882122	6.195717812	0.591672301	-0.09196886	0.11923255	0.005216446
F610	EX	3.75	-29.882122	6.195717812	0.591672301	-0.09196886	-0.62035793	-7.73943138
F610	EX	5	-29.882122	6.195717812	0.591672301	-0.09196886	-1.3599484	-15.4840794
F610	EY	0	-0.11591485	8.88044E-08	-1.0456E-05	9.30063E-07	-0.34449533	0.001647683
F610	EY	1.25	-0.11591485	8.88044E-08	-1.0456E-05	9.30063E-07	-0.34448227	0.001647572
F610	EY	2.5	-0.11591485	8.88044E-08	-1.0456E-05	9.30063E-07	-0.34446919	0.001647461
F610	EY	3.75	-0.11591485	8.88044E-08	-1.0456E-05	9.30063E-07	-0.34445614	0.00164735
F610	EY	5	-0.11591485	8.88044E-08	-1.0456E-05	9.30063E-07	-0.34444308	0.001647239

F612	COMB3	5	8.415259361	50.23265076	0.745374441	-0.03022961	-1.82146919	-45.1689339
F613	D	0	-10.7277498	-74.96595	-0.78769279	12.76979637	-2.37430358	-85.0522156
F613	D	0.75	-10.7277498	-62.6256256	-0.78769279	12.76979637	-1.78353357	-33.2215614
F613	D	1.5	-10.7277498	-46.5446777	-0.78769279	12.76979637	-1.19276357	7.951115608
F613	D	2.25	-10.7277498	-30.4637318	-0.78769279	12.76979637	-0.6019938	36.59549713
F613	D	3	-10.7277498	-18.1234131	-0.78769279	12.76979637	-0.01122387	54.58189774
F613	L	0	-2.25792789	-11.579278	-0.15095502	4.179885864	-0.18386854	-14.8759804
F613	L	0.75	-2.25792789	-10.876153	-0.15095502	4.179885864	-0.07065222	-6.36729908
F613	L	1.5	-2.25792789	-8.76677704	-0.15095502	4.179885864	0.042564109	1.086694479
F613	L	2.25	-2.25792789	-6.65740061	-0.15095502	4.179885864	0.155780435	6.782873154
F613	L	3	-2.25792789	-5.95427513	-0.15095502	4.179885864	0.268996745	11.42436314
F613	EX	0	-0.35872465	0.526989996	-1.55440259	-1.41396904	-2.15922809	0.877818227
F613	EX	0.75	-0.35872465	0.526989996	-1.55440259	-1.41396904	-0.99342537	0.482575536
F613	EX	1.5	-0.35872465	0.526989996	-1.55440259	-1.41396904	0.172377244	0.087332793
F613	EX	2.25	-0.35872465	0.526989996	-1.55440259	-1.41396904	1.338179946	-0.30790991
F613	EX	3	-0.35872465	0.526989996	-1.55440259	-1.41396904	2.503982544	-0.70315266
F613	EY	0	-30.199688	5.245366096	-0.36040628	-0.00048968	-0.67918003	15.73776817
F613	EY	0.75	-30.199688	5.245366096	-0.36040628	-0.00048968	-0.4088752	11.80374146
F613	EY	1.5	-30.199688	5.245366096	-0.36040628	-0.00048968	-0.13857034	7.869715691
F613	EY	2.25	-30.199688	5.245366096	-0.36040628	-0.00048968	0.13173452	3.935689211
F613	EY	3	-30.199688	5.245366096	-0.36040628	-0.00048968	0.402039379	0.001662907
F613	COMB1	0	-16.4859848	-108.485985	-1.18675935	22.01157379	-3.14335394	-125.864227
F613	COMB1	0.75	-16.4859848	-92.552597	-1.18675935	22.01157379	-2.25328374	-50.0535507
F613	COMB1	1.5	-16.4859848	-69.880455	-1.18675935	22.01157379	-1.36321378	11.28005028
F613	COMB1	2.25	-16.4859848	-47.2083206	-1.18675935	22.01157379	-0.47314385	54.76719284
F613	COMB1	3	-16.4859848	-31.2749367	-1.18675935	22.01157379	0.416926175	83.77725983
F613	COMB2	0	-21.8595657	-80.1639938	-2.59696293	13.26133823	-4.99968004	-88.1248169
F613	COMB2	0.75	-21.8595657	-66.9851685	-2.59696293	13.26133823	-3.05195665	-32.6706924
F613	COMB2	1.5	-21.8595657	-49.4357224	-2.59696293	13.26133823	-1.10423326	11.2603302
F613	COMB2	2.25	-21.8595657	-31.8862743	-2.59696293	13.26133823	0.843489945	41.48292923
F613	COMB2	3	-21.8595657	-18.7074566	-2.59696293	13.26133823	2.791213274	60.18242645
F613	COMB3	0	-43.7980537	-76.6880798	-1.74269164	14.27903557	-3.94423318	-77.1895905
F613	COMB3	0.75	-43.7980537	-63.5092583	-1.74269164	14.27903557	-2.63721371	-24.3423958
F613	COMB3	1.5	-43.7980537	-45.9598122	-1.74269164	14.27903557	-1.33019412	16.98169136
F613	COMB3	2.25	-43.7980537	-28.4103642	-1.74269164	14.27903557	-0.02317473	44.5973587
F613	COMB3	3	-43.7980537	-15.2315445	-1.74269164	14.27903557	1.283844709	60.68991852
F614	D	0	-13.2180958	-83.4544144	-0.67010707	-0.98974085	-1.91085505	-106.434792
F614	D	0.75	-13.2180958	-76.743782	-0.67010707	-0.98974085	-1.40827441	-45.8928604
F614	D	1.5	-13.2180958	-62.551899	-0.67010707	-0.98974085	-0.90569401	6.810626984
F614	D	2.25	-13.2180958	-48.3600197	-0.67010707	-0.98974085	-0.40311339	47.93504333
F614	D	3	-13.2180958	-41.6493912	-0.67010707	-0.98974085	0.099467136	81.2210083
F614	L	0	-4.51822042	-25.1132507	-0.08006682	-0.40022594	-0.08807028	-32.7859688
F614	L	0.75	-4.51822042	-23.7069988	-0.08006682	-0.40022594	-0.02802014	-14.3025827
F614	L	1.5	-4.51822042	-19.4882488	-0.08006682	-0.40022594	0.032030009	2.071424246
F614	L	2.25	-4.51822042	-15.269495	-0.08006682	-0.40022594	0.092080154	14.92980289
F614	L	3	-4.51822042	-13.8632441	-0.08006682	-0.40022594	0.152130306	25.6788044
F614	EX	0	-0.23753424	-0.13651834	-0.83970654	-1.7402283	-1.20075047	-0.15971626
F614	EX	0.75	-0.23753424	-0.13651834	-0.83970654	-1.7402283	-0.57097012	-0.05732745
F614	EX	1.5	-0.23753424	-0.13651834	-0.83970654	-1.7402283	0.058810096	0.045061357
F614	EX	2.25	-0.23753424	-0.13651834	-0.83970654	-1.7402283	0.688590348	0.147450164
F614	EX	3	-0.23753424	-0.13651834	-0.83970654	-1.7402283	1.318370581	0.249838978
F614	EY	0	-30.2691631	5.234287739	-1.09383988	0.001042689	-2.05867958	15.70284939
F614	EY	0.75	-30.2691631	5.234287739	-1.09383988	0.001042689	-1.23829925	11.77713203
F614	EY	1.5	-30.2691631	5.234287739	-1.09383988	0.001042689	-0.41791889	7.851413727
F614	EY	2.25	-30.2691631	5.234287739	-1.09383988	0.001042689	0.402461469	3.925696135
F614	EY	3	-30.2691631	5.234287739	-1.09383988	0.001042689	1.222841859	-2.1885E-05
F614	COMB1	0	-23.090868	-140.326492	-0.93223536	-1.82805049	-2.4339385	-180.179306
F614	COMB1	0.75	-23.090868	-130.023743	-0.93223536	-1.82805049	-1.7347616	-77.9555664
F614	COMB1	1.5	-23.090868	-106.243477	-0.93223536	-1.82805049	-1.03558481	11.48703098
F614	COMB1	2.25	-23.090868	-82.4632187	-0.93223536	-1.82805049	-0.33640784	81.40973663
F614	COMB1	3	-23.090868	-72.1604614	-0.93223536	-1.82805049	0.362769067	138.5513
F614	COMB2	0	-25.0828743	-94.030304	-1.94248927	-2.96610689	-3.92540073	-117.303024
F614	COMB2	0.75	-25.0828743	-86.5411758	-1.94248927	-2.96610689	-2.4685328	-49.0423546
F614	COMB2	1.5	-25.0828743	-70.310791	-1.94248927	-2.96610689	-1.01166523	10.32349014
F614	COMB2	2.25	-25.0828743	-54.08041	-1.94248927	-2.96610689	0.445202559	56.42388535
F614	COMB2	3	-25.0828743	-46.5912781	-1.94248927	-2.96610689	1.902070284	93.6294632
F614	COMB3	0	-47.159687	-90.0848083	-2.14187288	-1.71237612	-4.57398987	-105.646431
F614	COMB3	0.75	-47.159687	-82.5956802	-2.14187288	-1.71237612	-2.96758437	-40.3448868
F614	COMB3	1.5	-47.159687	-66.3652954	-2.14187288	-1.71237612	-1.36117887	16.06183624
F614	COMB3	2.25	-47.159687	-50.1349144	-2.14187288	-1.71237612	0.245226696	59.20310974
F614	COMB3	3	-47.159687	-42.6457825	-2.14187288	-1.71237612	1.851632237	93.44956207
F615	D	0	-21.4968262	-78.2053146	-1.13222027	1.193429351	-2.77921152	-88.2929153
F615	D	0.75	-21.4968262	-71.4946976	-1.13222027	1.193429351	-1.93004584	-31.6878033
F615	D	1.5	-21.4968262	-57.3028107	-1.13222027	1.193429351	-1.08088028	17.07886505
F615	D	2.25	-21.4968262	-43.1109314	-1.13222027	1.193429351	-0.23171465	54.26646042
F615	D	3	-21.4968262	-36.4003029	-1.13222027	1.193429351	0.617451012	83.61560822
F615	L	0	-6.90969181	-23.2614746	0.01854538	0.373906672	0.071828529	-26.4123421
F615	L	0.75	-6.90969181	-21.8552246	0.01854538	0.373906672	0.057919484	-9.31778812
F615	L	1.5	-6.90969181	-17.6364727	0.01854538	0.373906672	0.044010442	5.667387009
F615	L	2.25	-6.90969181	-13.4177198	0.01854538	0.373906672	0.030101402	17.13693428
F615	L	3	-6.90969181	-12.0114689	0.01854538	0.373906672	0.016192356	26.49710274
F615	EX	0	-0.26926613	-0.21667621	-0.2573007	-1.51550817	-0.37303582	-0.73443019
F615	EX	0.75	-0.26926613	-0.21667621	-0.2573007	-1.51550817	-0.18006018	-0.5719229
F615	EX	1.5	-0.26926613	-0.21667621	-0.2573007	-1.51550817	0.01291546	-0.40941569

F615	EX	2.25	-0.26926613	-0.21667621	-0.2573007	-1.51550817	0.205891103	-0.24690844
F615	EX	3	-0.26926613	-0.21667621	-0.2573007	-1.51550817	0.398866743	-0.08440121
F615	EY	0	-30.6307602	4.939518929	-0.75728822	0.001354095	-1.44803345	14.86214066
F615	EY	0.75	-30.6307602	4.939518929	-0.75728822	0.001354095	-0.88006687	11.15749836
F615	EY	1.5	-30.6307602	4.939518929	-0.75728822	0.001354095	-0.31210035	7.452857494
F615	EY	2.25	-30.6307602	4.939518929	-0.75728822	0.001354095	0.25586617	3.748216391
F615	EY	3	-30.6307602	4.939518929	-0.75728822	0.001354095	0.823832691	0.043575455
F615	COMB1	0	-36.851696	-131.064743	-1.32899177	2.030365944	-3.2201283	-148.211243
F615	COMB1	0.75	-36.851696	-120.761993	-1.32899177	2.030365944	-2.2233839	-52.9338226
F615	COMB1	1.5	-36.851696	-96.9817276	-1.32899177	2.030365944	-1.22663963	29.56245613
F615	COMB1	2.25	-36.851696	-73.2014694	-1.32899177	2.030365944	-0.22989534	92.53884888
F615	COMB1	3	-36.851696	-62.898716	-1.32899177	2.030365944	0.766848981	142.7341003
F615	COMB2	0	-34.675602	-88.1112595	-1.68784153	-0.19724299	-3.73776865	-97.1060104
F615	COMB2	0.75	-34.675602	-80.622139	-1.68784153	-0.19724299	-2.47188687	-33.284626
F615	COMB2	1.5	-34.675602	-64.3917542	-1.68784153	-0.19724299	-1.2060051	21.64193916
F615	COMB2	2.25	-34.675602	-48.1613693	-1.68784153	-0.19724299	0.059876684	63.30305862
F615	COMB2	3	-34.675602	-40.672245	-1.68784153	-0.19724299	1.325758457	96.06934357
F615	COMB3	0	-56.9953384	-84.324707	-2.05919194	0.894918203	-4.53348732	-85.6535492
F615	COMB3	0.75	-56.9953384	-76.8355789	-2.05919194	0.894918203	-2.98909283	-24.6720791
F615	COMB3	1.5	-56.9953384	-60.6051979	-2.05919194	0.894918203	-1.44469798	27.41456985
F615	COMB3	2.25	-56.9953384	-44.3748169	-2.05919194	0.894918203	0.099696733	66.23577118
F615	COMB3	3	-56.9953384	-36.8856888	-2.05919194	0.894918203	1.644091487	96.16213989
F616	D	0	-21.5128708	-78.155098	1.133677483	-1.25333023	2.778059483	-88.212677
F616	D	0.75	-21.5128708	-71.4444656	1.133677483	-1.25333023	1.927801013	-31.6452332
F616	D	1.5	-21.5128708	-57.2525864	1.133677483	-1.25333023	1.077542424	17.08376694
F616	D	2.25	-21.5128708	-43.0607071	1.133677483	-1.25333023	0.227283776	54.23369598
F616	D	3	-21.5128708	-36.3500824	1.133677483	-1.25333023	-0.62297481	83.54518127
F616	L	0	-7.06880474	-23.4170074	-0.02588981	-0.32663715	-0.08541758	-26.7264595
F616	L	0.75	-7.06880474	-22.0107574	-0.02588981	-0.32663715	-0.06600021	-9.51525784
F616	L	1.5	-7.06880474	-17.7920036	-0.02588981	-0.32663715	-0.04658285	5.586567402
F616	L	2.25	-7.06880474	-13.5732517	-0.02588981	-0.32663715	-0.02716548	17.17276192
F616	L	3	-7.06880474	-12.1670017	-0.02588981	-0.32663715	-0.00774811	26.64958191
F616	EX	0	0.140155017	0.211713403	-0.17438194	-1.50984263	-0.53704745	0.726301134
F616	EX	0.75	0.140155017	0.211713403	-0.17438194	-1.50984263	-0.40626091	0.567516029
F616	EX	1.5	0.140155017	0.211713403	-0.17438194	-1.50984263	-0.27547437	0.408730865
F616	EX	2.25	0.140155017	0.211713403	-0.17438194	-1.50984263	-0.14468786	0.24994576
F616	EX	3	0.140155017	0.211713403	-0.17438194	-1.50984263	-0.01390133	0.09116061
F616	EY	0	-30.6308079	4.939511776	0.7572999	-0.00135416	1.448055625	14.86211967
F616	EY	0.75	-30.6308079	4.939511776	0.7572999	-0.00135416	0.880080342	11.15748405
F616	EY	1.5	-30.6308079	4.939511776	0.7572999	-0.00135416	0.312105119	7.452847004
F616	EY	2.25	-30.6308079	4.939511776	0.7572999	-0.00135416	-0.25587013	3.748211622
F616	EY	3	-30.6308079	4.939511776	0.7572999	-0.00135416	-0.82384539	0.043575548
F616	COMB1	0	-37.1255302	-131.253326	1.318989277	-2.02661562	3.197003365	-148.617554
F616	COMB1	0.75	-37.1255302	-120.950569	1.318989277	-2.02661562	2.207760811	-53.1986923
F616	COMB1	1.5	-37.1255302	-97.170311	1.318989277	-2.02661562	1.218518376	29.43902779
F616	COMB1	2.25	-37.1255302	-73.3900528	1.318989277	-2.02661562	0.229275763	92.55685425
F616	COMB1	3	-37.1255302	-63.0872993	1.318989277	-2.02661562	-0.75996673	142.8935394
F616	COMB2	0	-34.3188324	-87.6641388	1.240270257	-2.98200107	2.790349245	-95.6088562
F616	COMB2	0.75	-34.3188324	-80.1750107	1.240270257	-2.98200107	1.860146284	-32.1228142
F616	COMB2	1.5	-34.3188324	-63.9446297	1.240270257	-2.98200107	0.929943085	22.46840858
F616	COMB2	2.25	-34.3188324	-47.7142487	1.240270257	-2.98200107	-0.00026018	63.79418182
F616	COMB2	3	-34.3188324	-40.2251205	1.240270257	-2.98200107	-0.93046337	96.2251358
F616	COMB3	0	-56.9333839	-84.1860352	1.922440648	-1.89590967	4.241344452	-85.2081375
F616	COMB3	0.75	-56.9333839	-76.6968994	1.922440648	-1.89590967	2.799513102	-24.3306751
F616	COMB3	1.5	-56.9333839	-60.4665222	1.922440648	-1.89590967	1.35768187	27.65196419
F616	COMB3	2.25	-56.9333839	-44.2361412	1.922440648	-1.89590967	-0.08414947	66.36915588
F616	COMB3	3	-56.9333839	-36.7470131	1.922440648	-1.89590967	-1.52598083	96.19152832
F617	D	0	-13.3554916	-83.6024246	0.661456347	1.10282886	1.894114494	-106.657898
F617	D	0.75	-13.3554916	-76.8917999	0.661456347	1.10282886	1.398021936	-46.0049553
F617	D	1.5	-13.3554916	-62.6999207	0.661456347	1.10282886	0.901929379	6.809546947
F617	D	2.25	-13.3554916	-48.5080376	0.661456347	1.10282886	0.405836821	48.04497528
F617	D	3	-13.3554916	-41.7974091	0.661456347	1.10282886	-0.09025574	81.4419632
F617	L	0	-6.01045132	-35.1895561	0.068960525	0.548280001	0.06802506	-43.4844093
F617	L	0.75	-6.01045132	-32.5176773	0.068960525	0.548280001	0.016304636	-17.7601967
F617	L	1.5	-6.01045132	-24.5020485	0.068960525	0.548280001	-0.03541579	3.956196308
F617	L	2.25	-6.01045132	-16.4864197	0.068960525	0.548280001	-0.08713621	18.99289513
F617	L	3	-6.01045132	-13.8145428	0.068960525	0.548280001	-0.13885663	30.02178001
F617	EX	0	-0.02309156	0.133664712	0.24581337	-1.70904768	0.230321378	0.156496823
F617	EX	0.75	-0.02309156	0.133664712	0.24581337	-1.70904768	0.045961246	0.056248233
F617	EX	1.5	-0.02309156	0.133664712	0.24581337	-1.70904768	-0.13839887	-0.04400035
F617	EX	2.25	-0.02309156	0.133664712	0.24581337	-1.70904768	-0.322759	-0.14424895
F617	EX	3	-0.02309156	0.133664712	0.24581337	-1.70904768	-0.50711912	-0.24449752
F617	EY	0	-30.2691631	5.234286308	1.093836308	-0.00104272	2.058671713	15.70284653
F617	EY	0.75	-30.2691631	5.234286308	1.093836308	-0.00104272	1.238294244	11.77712917
F617	EY	1.5	-30.2691631	5.234286308	1.093836308	-0.00104272	0.417916507	7.851411819
F617	EY	2.25	-30.2691631	5.234286308	1.093836308	-0.00104272	-0.40246117	3.925695181
F617	EY	3	-30.2691631	5.234286308	1.093836308	-0.00104272	-1.22283888	-2.1893E-05
F617	COMB1	0	-25.6433125	-156.62619	0.904084504	2.200642586	2.381777525	-197.564529
F617	COMB1	0.75	-25.6433125	-144.298447	0.904084504	2.200642586	1.703713775	-83.622261
F617	COMB1	1.5	-25.6433125	-114.443184	0.904084504	2.200642586	1.025650024	14.50137043
F617	COMB1	2.25	-25.6433125	-84.5879135	0.904084504	2.200642586	0.347586244	88.04260254
F617	COMB1	3	-25.6433125	-72.2601624	0.904084504	2.200642586	-0.33047751	145.7651978
F617	COMB2	0	-25.4752445	-97.0801086	1.315227032	-0.43851441	2.89711237	-120.580017
F617	COMB2	0.75	-25.4752445	-89.1923141	1.315227032	-0.43851441	1.910691619	-50.1316528

F617	COMB2	1.5	-25.4752445	-71.7659225	1.315227032	-0.43851441	0.924270749	10.82388115
F617	COMB2	2.25	-25.4752445	-54.3395195	1.315227032	-0.43851441	-0.06215006	57.51728058
F617	COMB2	3	-25.4752445	-46.4517212	1.315227032	-0.43851441	-1.04857087	94.71785736
F617	COMB3	0	-47.7064552	-93.3291473	1.942211032	0.79123354	4.244404793	-109.1511
F617	COMB3	0.75	-47.7064552	-85.4413528	1.942211032	0.79123354	2.787745714	-41.5159607
F617	COMB3	1.5	-47.7064552	-68.0149612	1.942211032	0.79123354	1.331086516	16.6263485
F617	COMB3	2.25	-47.7064552	-50.5885582	1.942211032	0.79123354	-0.12557256	60.50652695
F617	COMB3	3	-47.7064552	-42.7007561	1.942211032	0.79123354	-1.58223176	94.89387512
F618	D	0	-12.7749386	-89.8504486	0.775667191	-12.5529585	2.353176832	-100.840874
F618	D	0.75	-12.7749386	-75.6398163	0.775667191	-12.5529585	1.771426082	-38.3144112
F618	D	1.5	-12.7749386	-53.9479256	0.775667191	-12.5529585	1.18967545	10.7485981
F618	D	2.25	-12.7749386	-32.2560463	0.775667191	-12.5529585	0.607924759	42.60752869
F618	D	3	-12.7749386	-18.0454121	0.775667191	-12.5529585	0.026174042	61.00300598
F618	L	0	-4.50935268	-27.3478603	0.14497751	-4.14604759	0.172856346	-31.6462402
F618	L	0.75	-4.50935268	-24.6759834	0.14497751	-4.14604759	0.064123169	-11.8033028
F618	L	1.5	-4.50935268	-16.6603546	0.14497751	-4.14604759	-0.04461002	4.031816483
F618	L	2.25	-4.50935268	-8.64472485	0.14497751	-4.14604759	-0.15334322	13.18724251
F618	L	3	-4.50935268	-5.97284842	0.14497751	-4.14604759	-0.26207641	18.33485031
F618	EX	0	0.746464372	-0.51875573	0.448929816	-1.39449143	0.553640068	-0.86495209
F618	EX	0.75	0.746464372	-0.51875573	0.448929816	-1.39449143	0.216942519	-0.47588506
F618	EX	1.5	0.746464372	-0.51875573	0.448929816	-1.39449143	-0.11975502	-0.08681806
F618	EX	2.25	0.746464372	-0.51875573	0.448929816	-1.39449143	-0.45645255	0.302248955
F618	EX	3	0.746464372	-0.51875573	0.448929816	-1.39449143	-0.79315007	0.691315949
F618	EY	0	-30.1996822	5.245367527	0.360403389	0.000489655	0.679173946	15.73777294
F618	EY	0.75	-30.1996822	5.245367527	0.360403389	0.000489655	0.408871263	11.80374527
F618	EY	1.5	-30.1996822	5.245367527	0.360403389	0.000489655	0.13856858	7.869718075
F618	EY	2.25	-30.1996822	5.245367527	0.360403389	0.000489655	-0.13173412	3.935690641
F618	EY	3	-30.1996822	5.245367527	0.360403389	0.000489655	-0.40203682	0.001662915
F618	COMB1	0	-22.5448895	-151.577118	1.162764668	-21.6972256	3.100382328	-171.643036
F618	COMB1	0.75	-22.5448895	-130.249344	1.162764668	-21.6972256	2.228308439	-64.8625793
F618	COMB1	1.5	-22.5448895	-91.3940811	1.162764668	-21.6972256	1.35623455	19.34922409
F618	COMB1	2.25	-22.5448895	-52.5388145	1.162764668	-21.6972256	0.484160572	72.22862244
F618	COMB1	3	-22.5448895	-31.2110519	1.162764668	-21.6972256	-0.38791341	102.5393677
F618	COMB2	0	-23.57444	-101.842171	1.438287854	-15.9297562	3.312242746	-111.789307
F618	COMB2	0.75	-23.57444	-86.079361	1.438287854	-15.9297562	2.23352623	-40.7225342
F618	COMB2	1.5	-23.57444	-60.7779579	1.438287854	-15.9297562	1.154809713	14.94515514
F618	COMB2	2.25	-23.57444	-35.4765587	1.438287854	-15.9297562	0.076093256	50.44445419
F618	COMB2	3	-23.57444	-19.7137527	1.438287854	-15.9297562	-1.0026232	70.5446701
F618	COMB3	0	-46.3086586	-97.6133194	1.379954934	-14.9253616	3.412814617	-99.5992813
F618	COMB3	0.75	-46.3086586	-81.8505096	1.379954934	-14.9253616	2.37784791	-31.7041435
F618	COMB3	1.5	-46.3086586	-56.5491066	1.379954934	-14.9253616	1.342881322	20.79190636
F618	COMB3	2.25	-46.3086586	-31.2477074	1.379954934	-14.9253616	0.307914525	53.11956787
F618	COMB3	3	-46.3086586	-15.4849033	1.379954934	-14.9253616	-0.72705227	70.04814911
F619	D	0	-0.61637086	-35.9659538	0.037513133	-0.00028508	0.103857175	-25.4069786
F619	D	1.25	-0.61637086	-23.3253307	0.037513133	-0.00028508	0.056965753	13.81478691
F619	D	2.5	-0.61637086	3.446538925	0.037513133	-0.00028508	0.010074336	26.46416283
F619	D	3.75	-0.61637086	30.21840858	0.037513133	-0.00028508	-0.03681708	5.198439598
F619	D	5	-0.61637086	42.85903168	0.037513133	-0.00028508	-0.0837085	-42.6396751
F619	L	0	-0.33676037	-11.9040518	-0.00116568	7.97414E-06	-0.00325454	-8.35799313
F619	L	1.25	-0.33676037	-7.9978013	-0.00116568	7.97414E-06	-0.00179744	4.894467354
F619	L	2.5	-0.33676037	1.220948935	-0.00116568	7.97414E-06	-0.00034034	9.214635849
F619	L	3.75	-0.33676037	10.43970013	-0.00116568	7.97414E-06	0.001116758	1.842095017
F619	L	5	-0.33676037	14.34594917	-0.00116568	7.97414E-06	0.002573858	-14.462739
F619	EX	0	-2.83735156	0.93596518	0.162623733	-0.00087776	0.40920338	2.793391466
F619	EX	1.25	-2.83735156	0.93596518	0.162623733	-0.00087776	0.205923736	1.62343514
F619	EX	2.5	-2.83735156	0.93596518	0.162623733	-0.00087776	0.002644073	0.453478575
F619	EX	3.75	-2.83735156	0.93596518	0.162623733	-0.00087776	-0.2006356	-0.71647799
F619	EX	5	-2.83735156	0.93596518	0.162623733	-0.00087776	-0.40391526	-1.88643444
F619	EY	0	0.010796066	0.000463468	0.320686877	-0.00024905	0.811130881	0.00060514
F619	EY	1.25	0.010796066	0.000463468	0.320686877	-0.00024905	0.4102723	2.58041E-05
F619	EY	2.5	0.010796066	0.000463468	0.320686877	-0.00024905	0.009413714	-0.00055353
F619	EY	3.75	0.010796066	0.000463468	0.320686877	-0.00024905	-0.39144489	-0.00113287
F619	EY	5	0.010796066	0.000463468	0.320686877	-0.00024905	-0.79230344	-0.0017122
F619	COMB1	0	-1.27846169	-62.2056274	0.043150671	-0.00032934	0.119421341	-43.8611641
F619	COMB1	1.25	-1.27846169	-40.7868805	0.043150671	-0.00032934	0.065483004	24.40889168
F619	COMB1	2.5	-1.27846169	6.089365005	0.043150671	-0.00032934	0.011544658	46.50041199
F619	COMB1	3.75	-1.27846169	52.9656105	0.043150671	-0.00032934	-0.04239369	9.185479164
F619	COMB1	5	-1.27846169	74.38435364	0.043150671	-0.00032934	-0.09633204	-74.307991
F619	COMB2	0	-3.68652701	-40.5451584	0.308353513	-0.00128376	0.787056565	-26.418745
F619	COMB2	1.25	-3.68652701	-26.0420341	0.308353513	-0.00128376	0.401614696	17.72754669
F619	COMB2	2.5	-3.68652701	4.972334862	0.308353513	-0.00128376	0.016172782	31.1591568
F619	COMB2	3.75	-3.68652701	35.98670578	0.308353513	-0.00128376	-0.36926913	5.296710014
F619	COMB2	5	-3.68652701	50.4898262	0.308353513	-0.00128376	-0.75471103	-51.2804184
F619	COMB3	0	-1.6356988	-41.2187119	0.42696929	-0.00083482	1.088611364	-28.4295425
F619	COMB3	1.25	-1.6356988	-26.7155895	0.42696929	-0.00083482	0.554899752	16.55869293
F619	COMB3	2.5	-1.6356988	4.298780441	0.42696929	-0.00083482	0.021188127	30.83224487
F619	COMB3	3.75	-1.6356988	35.3131485	0.42696929	-0.00083482	-0.51252347	5.811741352
F619	COMB3	5	-1.6356988	49.81627274	0.42696929	-0.00083482	-1.04623508	-49.9234467
F620	D	0	-1.18043673	-39.9183273	0.043756392	0.002585709	0.096388273	-40.6666679
F620	D	1.25	-1.18043673	-27.2777042	0.043756392	0.002585709	0.041692778	3.495566607
F620	D	2.5	-1.18043673	-0.50583345	0.043756392	0.002585709	-0.01300272	21.08540726
F620	D	3.75	-1.18043673	26.26603699	0.043756392	0.002585709	-0.06769821	4.760150433
F620	D	5	-1.18043673	38.90665817	0.043756392	0.002585709	-0.1223937	-38.1375008
F620	L	0	-0.52109325	-13.278327	1.60231E-05	0.000357653	0.00081683	-13.6814566

F620	L	1.25	-0.52109325	-9.37207794	1.60231E-05	0.000357653	0.000796801	1.288849354
F620	L	2.5	-0.52109325	-0.15332702	1.60231E-05	0.000357653	0.000776772	7.326862335
F620	L	3.75	-0.52109325	9.065423012	1.60231E-05	0.000357653	0.000756743	1.672166944
F620	L	5	-0.52109325	12.97167301	1.60231E-05	0.000357653	0.000736714	-12.9148207
F620	EX	0	-3.88512421	0.626468122	0.161778942	-0.00264291	0.40715763	1.577660441
F620	EX	1.25	-3.88512421	0.626468122	0.161778942	-0.00264291	0.204933956	0.794575214
F620	EX	2.5	-3.88512421	0.626468122	0.161778942	-0.00264291	0.00271027	0.011490078
F620	EX	3.75	-3.88512421	0.626468122	0.161778942	-0.00264291	-0.19951341	-0.77159512
F620	EX	5	-3.88512421	0.626468122	0.161778942	-0.00264291	-0.40173709	-1.55468023
F620	EY	0	0.01950171	-0.00157378	0.666184127	-0.0059168	1.659166455	-0.00401737
F620	EY	1.25	0.01950171	-0.00157378	0.666184127	-0.0059168	0.826436341	-0.00205015
F620	EY	2.5	0.01950171	-0.00157378	0.666184127	-0.0059168	-0.00629385	-8.2929E-05
F620	EY	3.75	0.01950171	-0.00157378	0.666184127	-0.0059168	-0.83902401	0.001884291
F620	EY	5	0.01950171	-0.00157378	0.666184127	-0.0059168	-1.67175424	0.00385151
F620	COMB1	0	-2.25027323	-69.147316	0.052533306	0.003675096	0.116972856	-70.6903305
F620	COMB1	1.25	-2.25027323	-47.728569	0.052533306	0.003675096	0.051306214	6.256839275
F620	COMB1	2.5	-2.25027323	-0.85232335	0.052533306	0.003675096	-0.01436042	37.02547073
F620	COMB1	3.75	-2.25027323	46.02392197	0.052533306	0.003675096	-0.08002707	8.387647629
F620	COMB1	5	-2.25027323	67.4426651	0.052533306	0.003675096	-0.1456937	-66.4287109
F620	COMB2	0	-5.41856337	-45.4490166	0.423238456	-0.00177155	1.04551053	-45.3780441
F620	COMB2	1.25	-5.41856337	-30.9458942	0.423238456	-0.00177155	0.516462505	4.898072243
F620	COMB2	2.5	-5.41856337	0.068475656	0.423238456	-0.00177155	-0.0125856	24.45950508
F620	COMB2	3.75	-5.41856337	31.08284569	0.423238456	-0.00177155	-0.54163373	4.726883411
F620	COMB2	5	-5.41856337	45.58596802	0.423238456	-0.00177155	-1.07068181	-45.7204247
F620	COMB3	0	-2.60694027	-45.9012299	0.796402931	-0.0042175	1.971844435	-46.5169144
F620	COMB3	1.25	-2.60694027	-31.3981094	0.796402931	-0.0042175	0.976340711	4.324470997
F620	COMB3	2.5	-2.60694027	-0.38373813	0.796402931	-0.0042175	-0.01916297	24.45117188
F620	COMB3	3.75	-2.60694027	30.6306324	0.796402931	-0.0042175	-1.01466668	5.283816814
F620	COMB3	5	-2.60694027	45.13375473	0.796402931	-0.0042175	-2.01017046	-44.5982246
F621	D	0	-2.47638535	-39.414505	0.000999785	3.80732E-05	0.0666565	-39.1057587
F621	D	1.25	-2.47638535	-26.7738819	0.000999785	3.80732E-05	0.06540677	4.42669487
F621	D	2.5	-2.47638535	-0.00201193	0.000999785	3.80732E-05	0.064157039	21.3867588
F621	D	3.75	-2.47638535	26.76985931	0.000999785	3.80732E-05	0.062907308	4.431724548
F621	D	5	-2.47638535	39.4104805	0.000999785	3.80732E-05	0.061657574	-39.0957031
F621	L	0	-0.52004462	-13.0657072	0.001160596	0.000166552	-0.00052811	-13.1941633
F621	L	1.25	-0.52004462	-9.15945721	0.001160596	0.000166552	-0.00197886	1.510367155
F621	L	2.5	-0.52004462	0.059293132	0.001160596	0.000166552	-0.0034296	7.282605171
F621	L	3.75	-0.52004462	9.278043747	0.001160596	0.000166552	-0.00488035	1.362134337
F621	L	5	-0.52004462	13.18429375	0.001160596	0.000166552	-0.00633109	-13.4906282
F621	EX	0	-3.50343299	0.565513194	0.287979662	0.005194346	0.711330056	1.413546801
F621	EX	1.25	-3.50343299	0.565513194	0.287979662	0.005194346	0.351355493	0.706655264
F621	EX	2.5	-3.50343299	0.565513194	0.287979662	0.005194346	-0.0086191	-0.00023631
F621	EX	3.75	-3.50343299	0.565513194	0.287979662	0.005194346	-0.36859369	-0.70712787
F621	EX	5	-3.50343299	0.565513194	0.287979662	0.005194346	-0.72856832	-1.41401947
F621	EY	0	0.030240763	1.03561E-08	-5.0902E-06	-1.35E-07	-0.01468902	0.001135446
F621	EY	1.25	0.030240763	1.03561E-08	-5.0902E-06	-1.35E-07	-0.01468266	0.001135433
F621	EY	2.5	0.030240763	1.03561E-08	-5.0902E-06	-1.35E-07	-0.01467629	0.00113542
F621	EY	3.75	0.030240763	1.03561E-08	-5.0902E-06	-1.35E-07	-0.01466993	0.001135407
F621	EY	5	0.030240763	1.03561E-08	-5.0902E-06	-1.35E-07	-0.01466357	0.001135394
F621	COMB1	0	-3.80373383	-68.2025375	0.003056696	0.000312172	0.079142824	-68.0375748
F621	COMB1	1.25	-3.80373383	-46.7837906	0.003056696	0.000312172	0.07532195	7.728621006
F621	COMB1	2.5	-3.80373383	0.092454694	0.003056696	0.000312172	0.071501084	37.31627655
F621	COMB1	3.75	-3.80373383	46.96870041	0.003056696	0.000312172	0.06768021	7.497484207
F621	COMB1	5	-3.80373383	68.38745117	0.003056696	0.000312172	0.063859336	-68.4998474
F621	COMB2	0	-6.38054609	-44.9156189	0.299472719	0.005468547	0.801422536	-43.75383
F621	COMB2	1.25	-6.38054609	-30.4125004	0.299472719	0.005468547	0.427081674	5.855541229
F621	COMB2	2.5	-6.38054609	0.601871014	0.299472719	0.005468547	0.052740768	24.75022888
F621	COMB2	3.75	-6.38054609	31.61624146	0.299472719	0.005468547	-0.32160014	4.350863457
F621	COMB2	5	-6.38054609	46.11936569	0.299472719	0.005468547	-0.69594109	-46.7631874
F621	COMB3	0	-3.83584738	-45.3227882	0.092123613	0.001728518	0.27846849	-44.770752
F621	COMB3	1.25	-3.83584738	-30.8196697	0.092123613	0.001728518	0.163313955	5.347583771
F621	COMB3	2.5	-3.83584738	0.194701478	0.092123613	0.001728518	0.048159443	24.75123405
F621	COMB3	3.75	-3.83584738	31.20907211	0.092123613	0.001728518	-0.06699508	4.86082983
F621	COMB3	5	-3.83584738	45.71219635	0.092123613	0.001728518	-0.1821496	-45.7442589
F622	D	0	-1.1661061	-38.815033	-0.04014005	-0.00266689	-0.11332392	-38.0092087
F622	D	1.25	-1.1661061	-26.174408	-0.04014005	-0.00266689	-0.06314886	4.773903847
F622	D	2.5	-1.1661061	0.597461581	-0.04014005	-0.00266689	-0.01297379	20.98462486
F622	D	3.75	-1.1661061	27.36932945	-0.04014005	-0.00266689	0.03720127	3.280249596
F622	D	5	-1.1661061	40.00995255	-0.04014005	-0.00266689	0.087376326	-40.9965172
F622	L	0	-0.51939672	-13.1149826	0.00557609	-0.0007428	0.014756607	-13.3179464
F622	L	1.25	-0.51939672	-9.20873356	0.00557609	-0.0007428	0.007786493	1.44817853
F622	L	2.5	-0.51939672	0.010017093	0.00557609	-0.0007428	0.00081638	7.282011986
F622	L	3.75	-0.51939672	9.228767395	0.00557609	-0.0007428	-0.00615373	1.423135877
F622	L	5	-0.51939672	13.1350174	0.00557609	-0.0007428	-0.01312385	-13.3680325
F622	EX	0	-2.69492722	0.618662059	0.17372869	-0.00262522	0.436864376	1.542091846
F622	EX	1.25	-2.69492722	0.618662059	0.17372869	-0.00262522	0.21970351	0.768764198
F622	EX	2.5	-2.69492722	0.618662059	0.17372869	-0.00262522	0.002542639	-0.00456344
F622	EX	3.75	-2.69492722	0.618662059	0.17372869	-0.00262522	-0.21461824	-0.77789104
F622	EX	5	-2.69492722	0.618662059	0.17372869	-0.00262522	-0.43177912	-1.55121863
F622	EY	0	0.019502275	0.001573787	-0.66618377	0.005916907	-1.67175329	0.00385154
F622	EY	1.25	0.019502275	0.001573787	-0.66618377	0.005916907	-0.83902353	0.001884305
F622	EY	2.5	0.019502275	0.001573787	-0.66618377	0.005916907	-0.00629378	-8.2929E-05
F622	EY	3.75	0.019502275	0.001573787	-0.66618377	0.005916907	0.826435983	-0.00205016
F622	EY	5	0.019502275	0.001573787	-0.66618377	0.005916907	1.65916574	-0.0040174

F622	COMB1	0	-2.23036218	-67.5620117	-0.03924631	-0.00438874	-0.11237813	-66.9197693
F622	COMB1	1.25	-2.23036218	-46.1432648	-0.03924631	-0.00438874	-0.06332023	8.045770645
F622	COMB1	2.5	-2.23036218	0.732981265	-0.03924631	-0.00438874	-0.01426234	36.8327713
F622	COMB1	3.75	-2.23036218	47.60922241	-0.03924631	-0.00438874	0.034795549	6.213316917
F622	COMB1	5	-2.23036218	69.02796936	-0.03924631	-0.00438874	0.083853438	-70.584671
F622	COMB2	0	-4.1711278	-44.2461929	-0.07042927	-0.00388749	-0.18878943	-42.5075455
F622	COMB2	1.25	-4.1711278	-29.7430687	-0.07042927	-0.00388749	-0.10075283	6.265039921
F622	COMB2	2.5	-4.1711278	1.271301031	-0.07042927	-0.00388749	-0.01271623	24.32294083
F622	COMB2	3.75	-4.1711278	32.28567123	-0.07042927	-0.00388749	0.075320378	3.086786747
F622	COMB2	5	-4.1711278	46.78879166	-0.07042927	-0.00388749	0.163356945	-48.8640518
F622	COMB3	0	-2.21644616	-44.6904716	-0.68515903	0.002351594	-1.73207045	-43.6150208
F622	COMB3	1.25	-2.21644616	-30.1873493	-0.68515903	0.002351594	-0.87562168	5.712914467
F622	COMB3	2.5	-2.21644616	0.827021122	-0.68515903	0.002351594	-0.01917286	24.32616615
F622	COMB3	3.75	-2.21644616	31.8413887	-0.68515903	0.002351594	0.837275982	3.645361423
F622	COMB3	5	-2.21644616	46.34451294	-0.68515903	0.002351594	1.693724751	-47.7501259
F623	D	0	-0.6021449	-43.0578537	-0.03293944	7.98451E-06	-0.07235065	-43.1974144
F623	D	1.25	-0.6021449	-30.4172268	-0.03293944	7.98451E-06	-0.03117635	4.889224529
F623	D	2.5	-0.6021449	-3.64535856	-0.03293944	7.98451E-06	0.009997958	26.4034729
F623	D	3.75	-0.6021449	23.12651062	-0.03293944	7.98451E-06	0.05117226	14.0026226
F623	D	5	-0.6021449	35.76713181	-0.03293944	7.98451E-06	0.092346564	-24.9706192
F623	L	0	-0.33516124	-14.3565702	0.006076341	-0.00014808	0.01474921	-14.4434814
F623	L	1.25	-0.33516124	-10.4503202	0.006076341	-0.00014808	0.007153783	1.874627471
F623	L	2.5	-0.33516124	-1.23156989	0.006076341	-0.00014808	-0.00044164	9.260444641
F623	L	3.75	-0.33516124	7.98718071	0.006076341	-0.00014808	-0.00803707	4.953551769
F623	L	5	-0.33516124	11.89343071	0.006076341	-0.00014808	-0.01563249	-8.28563309
F623	EX	0	-1.40227604	0.921391547	0.171351358	-0.00086815	0.422605872	1.851913929
F623	EX	1.25	-1.40227604	0.921391547	0.171351358	-0.00086815	0.208416685	0.700174332
F623	EX	2.5	-1.40227604	0.921391547	0.171351358	-0.00086815	-0.00577251	-0.45156518
F623	EX	3.75	-1.40227604	0.921391547	0.171351358	-0.00086815	-0.21996172	-1.60330474
F623	EX	5	-1.40227604	0.921391547	0.171351358	-0.00086815	-0.43415093	-2.75504446
F623	EY	0	0.010796365	-0.00046345	-0.32068476	0.000249105	-0.7922982	-0.00171217
F623	EY	1.25	0.010796365	-0.00046345	-0.32068476	0.000249105	-0.39144221	-0.00113285
F623	EY	2.5	0.010796365	-0.00046345	-0.32068476	0.000249105	0.00941374	-0.00055354
F623	EY	3.75	0.010796365	-0.00046345	-0.32068476	0.000249105	0.410269707	2.57792E-05
F623	EY	5	0.010796365	-0.00046345	-0.32068476	0.000249105	0.811125696	0.000605096
F623	COMB1	0	-1.25883186	-74.6399384	-0.02980519	-0.00022735	-0.06322204	-74.9464722
F623	COMB1	1.25	-1.25883186	-53.2211838	-0.02980519	-0.00022735	-0.02596556	8.866473198
F623	COMB1	2.5	-1.25883186	-6.34494209	-0.02980519	-0.00022735	0.011290922	46.50087738
F623	COMB1	3.75	-1.25883186	40.53130341	-0.02980519	-0.00022735	0.048547402	24.72883034
F623	COMB1	5	-1.25883186	61.95005035	-0.02980519	-0.00022735	0.085803889	-43.221756
F623	COMB2	0	-2.18578267	-48.7795715	0.0436606	-0.00085833	0.116500989	-47.9907913
F623	COMB2	1.25	-2.18578267	-34.2764473	0.0436606	-0.00085833	0.061925255	6.448517323
F623	COMB2	2.5	-2.18578267	-3.26207685	0.0436606	-0.00085833	0.00734952	30.17314148
F623	COMB2	3.75	-2.18578267	27.75229263	0.0436606	-0.00085833	-0.04722622	14.60371017
F623	COMB2	5	-2.18578267	42.25541306	0.0436606	-0.00085833	-0.10180195	-31.6804066
F623	COMB3	0	-1.16820872	-49.4433136	-0.31541568	-5.017E-05	-0.77011442	-49.325428
F623	COMB3	1.25	-1.16820872	-34.9401894	-0.31541568	-5.017E-05	-0.37584481	5.94355917
F623	COMB3	2.5	-1.16820872	-3.9258194	-0.31541568	-5.017E-05	0.018424826	30.49786186
F623	COMB3	3.75	-1.16820872	27.08855057	-0.31541568	-5.017E-05	0.412694424	15.75810814
F623	COMB3	5	-1.16820872	41.59167099	-0.31541568	-5.017E-05	0.806964099	-29.6963291
F624	D	0	-10.6902361	17.84254074	-0.17132188	-12.6371832	-0.11508103	54.58218384
F624	D	0.75	-10.6902361	30.18284798	-0.17132188	-12.6371832	0.013410334	36.80645752
F624	D	1.5	-10.6902361	46.2637825	-0.17132188	-12.6371832	0.141901702	8.372766495
F624	D	2.25	-10.6902361	62.34471512	-0.17132188	-12.6371832	0.270393074	-32.5891953
F624	D	3	-10.6902361	74.68502045	-0.17132188	-12.6371832	0.398884445	-84.2091217
F624	L	0	-2.25909328	5.949776173	0.185805336	-4.17810726	0.272251278	11.42435551
F624	L	0.75	-2.25909328	6.652901173	0.185805336	-4.17810726	0.132897332	6.786243439
F624	L	1.5	-2.25909328	8.762275696	0.185805336	-4.17810726	-0.00645662	1.093444228
F624	L	2.25	-2.25909328	10.87164974	0.185805336	-4.17810726	-0.14581059	-6.35716581
F624	L	3	-2.25909328	11.5747757	0.185805336	-4.17810726	-0.28516454	-14.862463
F624	EX	0	-0.19610094	-0.40897515	1.282948971	1.379422545	2.094779015	-0.70227486
F624	EX	0.75	-0.19610094	-0.40897515	1.282948971	1.379422545	1.132567644	-0.39554358
F624	EX	1.5	-0.19610094	-0.40897515	1.282948971	1.379422545	0.170356259	-0.08881228
F624	EX	2.25	-0.19610094	-0.40897515	1.282948971	1.379422545	-0.79185516	0.217919007
F624	EX	3	-0.19610094	-0.40897515	1.282948971	1.379422545	-1.75406647	0.524650335
F624	EY	0	-29.8790016	5.244902611	-0.37120232	0.000115463	-0.40909153	0.001911955
F624	EY	0.75	-29.8790016	5.244902611	-0.37120232	0.000115463	-0.13068984	-3.93176365
F624	EY	1.5	-29.8790016	5.244902611	-0.37120232	0.000115463	0.147711828	-7.86543941
F624	EY	2.25	-29.8790016	5.244902611	-0.37120232	0.000115463	0.426113486	-11.7991142
F624	EY	3	-29.8790016	5.244902611	-0.37120232	0.000115463	0.704515159	-15.7327909
F624	COMB1	0	-16.4428329	30.93069077	0.091702268	-21.8495922	0.297504812	83.77758789
F624	COMB1	0.75	-16.4428329	46.86405945	0.091702268	-21.8495922	0.228728145	55.02573776
F624	COMB1	1.5	-16.4428329	69.53617859	0.091702268	-21.8495922	0.159951448	11.79683113
F624	COMB1	2.25	-16.4428329	92.20829773	0.091702268	-21.8495922	0.091174744	-49.2784996
F624	COMB1	3	-16.4428329	108.1416702	0.091702268	-21.8495922	0.022398081	-124.830887
F624	COMB2	0	-21.5512123	21.8377018	1.089564204	-13.1574078	2.00415659	60.18371201
F624	COMB2	0.75	-21.5512123	35.01651001	1.089564204	-13.1574078	1.186983824	39.1365509
F624	COMB2	1.5	-21.5512123	52.56594086	1.089564204	-13.1574078	0.369810909	6.566306114
F624	COMB2	2.25	-21.5512123	70.1153717	1.089564204	-13.1574078	-0.44736195	-39.7123375
F624	COMB2	3	-21.5512123	83.29418182	1.089564204	-13.1574078	-1.26453471	-97.5140686
F624	COMB3	0	-43.3710861	25.98716736	-0.1069928	-14.150507	0.19523339	60.69075394
F624	COMB3	0.75	-43.3710861	39.16597366	-0.1069928	-14.150507	0.275478005	36.53149796
F624	COMB3	1.5	-43.3710861	56.71540833	-0.1069928	-14.150507	0.355722576	0.849152982
F624	COMB3	2.25	-43.3710861	74.26483917	-0.1069928	-14.150507	0.435967177	-48.5415878

F624	COMB3	3	-43.3710861	87.44364929	-0.1069928	-14.150507	0.516211808	-109.455421
F625	D	0	-13.211853	41.12796402	-0.10604116	0.983268261	-0.08062964	81.21813202
F625	D	0.75	-13.211853	47.83858871	-0.10604116	0.983268261	-0.0010988	48.32326889
F625	D	1.5	-13.211853	62.03046036	-0.10604116	0.983268261	0.078432046	7.589965343
F625	D	2.25	-13.211853	76.22232819	-0.10604116	0.983268261	0.157962888	-44.7223892
F625	D	3	-13.211853	82.93295288	-0.10604116	0.983268261	0.237493724	-104.873184
F625	L	0	-4.51703882	13.7610321	0.104266085	0.381055921	0.153887331	25.67845535
F625	L	0.75	-4.51703882	15.1672821	0.104266085	0.381055921	0.075687788	15.00612164
F625	L	1.5	-4.51703882	19.3860321	0.104266085	0.381055921	-0.00251175	2.224415064
F625	L	2.25	-4.51703882	23.60477829	0.104266085	0.381055921	-0.08071128	-14.0729141
F625	L	3	-4.51703882	25.0110302	0.104266085	0.381055921	-0.15891081	-32.4796181
F625	EX	0	-0.23837902	0.172978729	0.208066002	1.723866701	0.507297695	0.25160411
F625	EX	0.75	-0.23837902	0.172978729	0.208066002	1.723866701	0.351248235	0.121870123
F625	EX	1.5	-0.23837902	0.172978729	0.208066002	1.723866701	0.195198759	-0.00786388
F625	EX	2.25	-0.23837902	0.172978729	0.208066002	1.723866701	0.039149303	-0.13759789
F625	EX	3	-0.23837902	0.172978729	0.208066002	1.723866701	-0.11690016	-0.2673319
F625	EY	0	-29.9236679	5.236324787	-1.10254562	-0.00126248	-1.22862816	0.005645864
F625	EY	0.75	-29.9236679	5.236324787	-1.10254562	-0.00126248	-0.40171918	-3.92159629
F625	EY	1.5	-29.9236679	5.236324787	-1.10254562	-0.00126248	0.425189734	-7.84883881
F625	EY	2.25	-29.9236679	5.236324787	-1.10254562	-0.00126248	1.25209856	-11.7760811
F625	EY	3	-29.9236679	5.236324787	-1.10254562	-0.00126248	2.079007626	-15.7033234
F625	COMB1	0	-23.0814857	71.37120819	0.03957634	1.789611459	0.14946416	138.547287
F625	COMB1	0.75	-23.0814857	81.67395782	0.03957634	1.789611459	0.119781904	81.99771881
F625	COMB1	1.5	-23.0814857	105.4542007	0.03957634	1.789611459	0.090099663	12.66702271
F625	COMB1	2.25	-23.0814857	129.234436	0.03957634	1.789611459	0.060417417	-76.1835327
F625	COMB1	3	-23.0814857	139.5371857	0.03957634	1.789611459	0.030735165	-177.815201
F625	COMB2	0	-24.9679909	49.3475647	-0.21045294	2.936268568	0.10184864	93.62994385
F625	COMB2	0.75	-24.9679909	56.83668518	-0.21045294	2.936268568	0.259688288	54.35719299
F625	COMB2	1.5	-24.9679909	73.06705475	-0.21045294	2.936268568	0.417527914	6.189630985
F625	COMB2	2.25	-24.9679909	89.29742432	-0.21045294	2.936268568	0.57536757	-55.2433586
F625	COMB2	3	-24.9679909	96.78655243	-0.21045294	2.936268568	0.733207226	-125.571159
F625	COMB3	0	-46.7902527	53.07171631	-1.17063153	1.694156766	-1.1664474	93.45294189
F625	COMB3	0.75	-46.7902527	60.56084061	-1.17063153	1.694156766	-0.28847402	51.38707352
F625	COMB3	1.5	-46.7902527	76.79121399	-1.17063153	1.694156766	0.589499295	0.426396668
F625	COMB3	2.25	-46.7902527	93.02158356	-1.17063153	1.694156766	1.467472553	-63.7997055
F625	COMB3	3	-46.7902527	100.510704	-1.17063153	1.694156766	2.345445871	-136.920624
F626	D	0	-21.5395832	41.92085648	0.163728222	0.225166887	0.428400815	83.61815643
F626	D	0.75	-21.5395832	48.63148117	0.163728222	0.225166887	0.305604666	50.12862015
F626	D	1.5	-21.5395832	62.823349	0.163728222	0.225166887	0.182808533	8.800647736
F626	D	2.25	-21.5395832	77.01521301	0.163728222	0.225166887	0.060012393	-44.1063766
F626	D	3	-21.5395832	83.72583771	0.163728222	0.225166887	-0.06278373	-104.851837
F626	L	0	-6.90854692	14.02591133	0.017496752	0.094564587	0.017457183	26.49729538
F626	L	0.75	-6.90854692	15.43216133	0.017496752	0.094564587	0.004334623	15.62630177
F626	L	1.5	-6.90854692	19.65090942	0.017496752	0.094564587	-0.00878794	2.645936012
F626	L	2.25	-6.90854692	23.86965942	0.017496752	0.094564587	-0.0219105	-13.8500528
F626	L	3	-6.90854692	25.27590752	0.017496752	0.094564587	-0.03503306	-32.4554138
F626	EX	0	-0.14306542	-0.15572131	-0.63899171	1.452718854	-0.71420044	-0.09223846
F626	EX	0.75	-0.14306542	-0.15572131	-0.63899171	1.452718854	-0.23495682	0.024552479
F626	EX	1.5	-0.14306542	-0.15572131	-0.63899171	1.452718854	0.24428682	0.141343415
F626	EX	2.25	-0.14306542	-0.15572131	-0.63899171	1.452718854	0.723530471	0.258134365
F626	EX	3	-0.14306542	-0.15572131	-0.63899171	1.452718854	1.202774048	0.374925286
F626	EY	0	-31.2969494	4.937944889	-0.76802731	-0.00136197	-0.83323252	0.037658792
F626	EY	0.75	-31.2969494	4.937944889	-0.76802731	-0.00136197	-0.25721219	-3.66579866
F626	EY	1.5	-31.2969494	4.937944889	-0.76802731	-0.00136197	0.318808109	-7.3692565
F626	EY	2.25	-31.2969494	4.937944889	-0.76802731	-0.00136197	0.894828439	-11.0727139
F626	EY	3	-31.2969494	4.937944889	-0.76802731	-0.00136197	1.470848799	-14.7761707
F626	COMB1	0	-36.9011726	72.74649048	0.224468678	0.421503603	0.542012453	142.7374573
F626	COMB1	0.75	-36.9011726	83.04923248	0.224468678	0.421503603	0.373660982	85.15642548
F626	COMB1	1.5	-36.9011726	106.8294754	0.224468678	0.421503603	0.20530954	14.79427433
F626	COMB1	2.25	-36.9011726	130.6097107	0.224468678	0.421503603	0.036958076	-75.087738
F626	COMB1	3	-36.9011726	140.9124603	0.224468678	0.421503603	-0.13139337	-177.75087
F626	COMB2	0	-34.799366	49.82934189	-0.72585893	1.769348025	-0.54634583	96.0621109
F626	COMB2	0.75	-34.799366	57.31846619	-0.72585893	1.769348025	-0.00195184	56.42802048
F626	COMB2	1.5	-34.799366	73.54883575	-0.72585893	1.769348025	0.542442143	7.899124622
F626	COMB2	2.25	-34.799366	89.77919769	-0.72585893	1.769348025	1.086836219	-53.8951988
F626	COMB2	3	-34.799366	97.26831818	-0.72585893	1.769348025	1.631230235	-124.584328
F626	COMB3	0	-57.6996155	53.57085419	-0.83028495	0.72238946	-0.64454746	96.15620422
F626	COMB3	0.75	-57.6996155	61.05997467	-0.83028495	0.72238946	-0.02183389	53.71598053
F626	COMB3	1.5	-57.6996155	77.29034424	-0.83028495	0.72238946	0.60087961	2.38095355
F626	COMB3	2.25	-57.6996155	93.52070618	-0.83028495	0.72238946	1.223593235	-62.2195015
F626	COMB3	3	-57.6996155	101.0098267	-0.83028495	0.72238946	1.846306682	-135.714752
F627	D	0	-21.5540104	41.87542725	-0.17660159	-0.16683885	-0.44799331	83.54788208
F627	D	0.75	-21.5540104	48.58605194	-0.17660159	-0.16683885	-0.31554213	50.09241867
F627	D	1.5	-21.5540104	62.77791977	-0.17660159	-0.16683885	-0.183091	8.798519135
F627	D	2.25	-21.5540104	76.9697876	-0.17660159	-0.16683885	-0.05063985	-44.0744324
F627	D	3	-21.5540104	83.68041229	-0.17660159	-0.16683885	0.081811309	-104.78582
F627	L	0	-7.06438971	14.13227654	-0.02653773	-0.15395513	-0.02883581	26.65048981
F627	L	0.75	-7.06438971	15.53852558	-0.02653773	-0.15395513	-0.00893252	15.6997261
F627	L	1.5	-7.06438971	19.75727272	-0.02653773	-0.15395513	0.010970765	2.639585257
F627	L	2.25	-7.06438971	23.97602272	-0.02653773	-0.15395513	0.030874055	-13.9361773
F627	L	3	-7.06438971	25.38227272	-0.02653773	-0.15395513	0.050777342	-32.621315
F627	EX	0	0.025904048	0.158564553	-0.9828881	1.446268678	-1.17933404	0.098980181
F627	EX	0.75	0.025904048	0.158564553	-0.9828881	1.446268678	-0.44216818	-0.0199432
F627	EX	1.5	0.025904048	0.158564553	-0.9828881	1.446268678	0.294997692	-0.13886657

F627	EX	2.25	0.025904048	0.158564553	-0.9828881	1.446268678	1.032163501	-0.25778994
F627	EX	3	0.025904048	0.158564553	-0.9828881	1.446268678	1.769329309	-0.37671334
F627	EY	0	-31.2969856	4.937937737	0.768038392	0.00136199	0.833244324	0.037658505
F627	EY	0.75	-31.2969856	4.937937737	0.768038392	0.00136199	0.257215708	-3.6657939
F627	EY	1.5	-31.2969856	4.937937737	0.768038392	0.00136199	-0.31881288	-7.36924648
F627	EY	2.25	-31.2969856	4.937937737	0.768038392	0.00136199	-0.89484149	-11.0726986
F627	EY	3	-31.2969856	4.937937737	0.768038392	0.00136199	-1.47087014	-14.7761517
F627	COMB1	0	-37.1678352	72.86215973	-0.25438228	-0.44653484	-0.58372927	142.8982391
F627	COMB1	0.75	-37.1678352	83.16490173	-0.25438228	-0.44653484	-0.39294261	85.23046112
F627	COMB1	1.5	-37.1678352	106.945137	-0.25438228	-0.44653484	-0.20215598	14.78155994
F627	COMB1	2.25	-37.1678352	130.7253876	-0.25438228	-0.44653484	-0.01136932	-75.1872025
F627	COMB1	3	-37.1678352	141.0281372	-0.25438228	-0.44653484	0.179417327	-177.937088
F627	COMB2	0	-34.6887321	50.14043045	-0.96914816	1.273640394	-1.43761492	96.23448944
F627	COMB2	0.75	-34.6887321	57.62955475	-0.96914816	1.273640394	-0.7107541	56.36708832
F627	COMB2	1.5	-34.6887321	73.85991669	-0.96914816	1.273640394	0.016106786	7.604875088
F627	COMB2	2.25	-34.6887321	90.09029388	-0.96914816	1.273640394	0.742967665	-54.42276
F627	COMB2	3	-34.6887321	97.57941437	-0.96914816	1.273640394	1.469828486	-125.345207
F627	COMB3	0	-57.7106667	53.65565109	0.303039491	0.233328044	0.023940085	96.19090271
F627	COMB3	0.75	-57.7106667	61.14477158	0.303039491	0.233328044	-0.20333946	53.68708801
F627	COMB3	1.5	-57.7106667	77.37513733	0.303039491	0.233328044	-0.43061903	2.288463116
F627	COMB3	2.25	-57.7106667	93.6055069	0.303039491	0.233328044	-0.65789855	-62.3755875
F627	COMB3	3	-57.7106667	101.0946274	0.303039491	0.233328044	-0.88517815	-135.934448
F628	D	0	-13.3482914	41.27038956	0.097495072	-1.09806728	0.069471247	81.43928528
F628	D	0.75	-13.3482914	47.98101425	0.097495072	-1.09806728	-0.00365004	48.43759537
F628	D	1.5	-13.3482914	62.17288589	0.097495072	-1.09806728	-0.07677133	7.597474575
F628	D	2.25	-13.3482914	76.36474609	0.097495072	-1.09806728	-0.1498926	-44.821701
F628	D	3	-13.3482914	83.07537079	0.097495072	-1.09806728	-0.22301389	-105.079308
F628	L	0	-6.00995111	13.67704391	-0.11527494	-0.52716935	-0.16672969	30.02118301
F628	L	0.75	-6.00995111	16.34891891	-0.11527494	-0.52716935	-0.08027352	19.0954361
F628	L	1.5	-6.00995111	24.36454201	-0.11527494	-0.52716935	0.006182661	4.161877155
F628	L	2.25	-6.00995111	32.3801651	-0.11527494	-0.52716935	0.092638843	-17.4513645
F628	L	3	-6.00995111	35.0520401	-0.11527494	-0.52716935	0.179095015	-43.0724182
F628	EX	0	-0.0254689	-0.1690648	-1.04683769	1.694084764	-1.36150408	-0.24625462
F628	EX	0.75	-0.0254689	-0.1690648	-1.04683769	1.694084764	-0.57637608	-0.11945602
F628	EX	1.5	-0.0254689	-0.1690648	-1.04683769	1.694084764	0.208751857	0.007342543
F628	EX	2.25	-0.0254689	-0.1690648	-1.04683769	1.694084764	0.993879914	0.134141117
F628	EX	3	-0.0254689	-0.1690648	-1.04683769	1.694084764	1.779007792	0.260939687
F628	EY	0	-29.9236641	5.236323833	1.102542281	0.001262503	1.22862494	0.005645909
F628	EY	0.75	-29.9236641	5.236323833	1.102542281	0.001262503	0.401718587	-3.92159557
F628	EY	1.5	-29.9236641	5.236323833	1.102542281	0.001262503	-0.4251878	-7.8488369
F628	EY	2.25	-29.9236641	5.236323833	1.102542281	0.001262503	-1.25209427	-11.7760782
F628	EY	3	-29.9236641	5.236323833	1.102542281	0.001262503	-2.07900071	-15.7033205
F628	COMB1	0	-25.6338711	71.40773773	-0.06744581	-2.16115165	-0.18340202	145.7610321
F628	COMB1	0.75	-25.6338711	83.73548889	-0.06744581	-2.16115165	-0.13281769	88.67781067
F628	COMB1	1.5	-25.6338711	113.5907288	-0.06744581	-2.16115165	-0.08223333	15.77597237
F628	COMB1	2.25	-25.6338711	143.4459534	-0.06744581	-2.16115165	-0.03164898	-81.7082214
F628	COMB1	3	-25.6338711	155.7737122	-0.06744581	-2.16115165	0.018935371	-195.011032
F628	COMB2	0	-25.3611546	49.11663818	-0.67011797	0.434746444	-1.00171494	94.71482849
F628	COMB2	0.75	-25.3611546	57.00443268	-0.67011797	0.434746444	-0.49912661	55.5155983
F628	COMB2	1.5	-25.3611546	74.43081665	-0.67011797	0.434746444	0.003461667	6.82355547
F628	COMB2	2.25	-25.3611546	91.85719299	-0.67011797	0.434746444	0.506049991	-56.1305923
F628	COMB2	3	-25.3611546	99.74498749	-0.67011797	0.434746444	1.008638144	-128.57756
F628	COMB3	0	-47.3367081	53.08706284	0.893973708	-0.78406668	0.881607413	94.89627838
F628	COMB3	0.75	-47.3367081	60.97485733	0.893973708	-0.78406668	0.211127356	52.71923447
F628	COMB3	1.5	-47.3367081	78.40124512	0.893973708	-0.78406668	-0.4593527	1.049373388
F628	COMB3	2.25	-47.3367081	95.82762146	0.893973708	-0.78406668	-1.12983286	-64.8825912
F628	COMB3	3	-47.3367081	103.715416	0.893973708	-0.78406668	-1.800313	-140.307373
F629	D	0	-12.7419987	17.72172165	0.173522323	12.41766167	0.118520603	61.00301361
F629	D	0.75	-12.7419987	31.93234062	0.173522323	12.41766167	-0.0116211	42.85032272
F629	D	1.5	-12.7419987	53.62420654	0.173522323	12.41766167	-0.14176279	11.23420525
F629	D	2.25	-12.7419987	75.31607056	0.173522323	12.41766167	-0.27190453	-37.5859642
F629	D	3	-12.7419987	89.52669525	0.173522323	12.41766167	-0.4020462	-99.8695602
F629	L	0	-4.51542902	5.920582294	-0.19018373	4.139584541	-0.27770889	18.33470154
F629	L	0.75	-4.51542902	8.592456818	-0.19018373	4.139584541	-0.13507114	13.22629929
F629	L	1.5	-4.51542902	16.608078	-0.19018373	4.139584541	0.007566614	4.110085011
F629	L	2.25	-4.51542902	24.6237011	-0.19018373	4.139584541	0.150204375	-11.685812
F629	L	3	-4.51542902	27.2955761	-0.19018373	4.139584541	0.29284212	-31.4895172
F629	EX	0	0.575112998	0.402635872	-0.95334619	1.360552907	-1.227301	0.690447807
F629	EX	0.75	0.575112998	0.402635872	-0.95334619	1.360552907	-0.51229155	0.388471007
F629	EX	1.5	0.575112998	0.402635872	-0.95334619	1.360552907	0.202717826	0.086494222
F629	EX	2.25	0.575112998	0.402635872	-0.95334619	1.360552907	0.917727292	-0.21548256
F629	EX	3	0.575112998	0.402635872	-0.95334619	1.360552907	1.632736564	-0.51745933
F629	EY	0	-29.8789959	5.244904041	0.371199757	-0.00011544	0.40908888	0.00191202
F629	EY	0.75	-29.8789959	5.244904041	0.371199757	-0.00011544	0.130689129	-3.9317646
F629	EY	1.5	-29.8789959	5.244904041	0.371199757	-0.00011544	-0.14771059	-7.86544085
F629	EY	2.25	-29.8789959	5.244904041	0.371199757	-0.00011544	-0.42611036	-11.799118
F629	EY	3	-29.8789959	5.244904041	0.371199757	-0.00011544	-0.70451003	-15.7327938
F629	COMB1	0	-22.5150852	30.73899841	-0.09606719	21.5245285	-0.30210951	102.5391388
F629	COMB1	0.75	-22.5150852	52.06673813	-0.09606719	21.5245285	-0.23005915	72.58246613
F629	COMB1	1.5	-22.5150852	90.92197418	-0.09606719	21.5245285	-0.15800877	20.05718231
F629	COMB1	2.25	-22.5150852	129.7772064	-0.09606719	21.5245285	-0.08595843	-63.800457
F629	COMB1	3	-22.5150852	151.10495	-0.09606719	21.5245285	-0.01390805	-170.2267
F629	COMB2	0	-23.6181011	22.54166412	-0.74749482	15.75064945	-1.10442519	70.54380798
F629	COMB2	0.75	-23.6181011	38.3044548	-0.74749482	15.75064945	-0.54380429	48.32268524

F629	COMB2	1.5	-23.6181011	63.60583496	-0.74749482	15.75064945	0.016816653	10.70249939
F629	COMB2	2.25	-23.6181011	88.9072113	-0.74749482	15.75064945	0.57743758	-47.0860405
F629	COMB2	3	-23.6181011	104.6700058	-0.74749482	15.75064945	1.138058424	-120.273636
F629	COMB3	0	-45.9932442	26.10677147	0.211746261	14.77096653	0.07991185	70.0480957
F629	COMB3	0.75	-45.9932442	41.86956024	0.211746261	14.77096653	-0.07889782	45.15314102
F629	COMB3	1.5	-45.9932442	67.17094421	0.211746261	14.77096653	-0.23770747	4.85912466
F629	COMB3	2.25	-45.9932442	92.47232056	0.211746261	14.77096653	-0.39651713	-55.6032448
F629	COMB3	3	-45.9932442	108.2351151	0.211746261	14.77096653	-0.55532676	-131.464661
F630	D	0	6.408710957	-42.0633316	-0.02704394	0.020454701	-0.07265499	-34.454834
F630	D	1.25	6.408710957	-27.6227055	-0.02704394	0.020454701	-0.03885007	11.26365185
F630	D	2.5	6.408710957	0.949163914	-0.02704394	0.020454701	-0.00504514	28.15974617
F630	D	3.75	6.408710957	29.52103424	-0.02704394	0.020454701	0.028759783	8.890742302
F630	D	5	6.408710957	43.96165848	-0.02704394	0.020454701	0.062564708	-39.2006531
F630	L	0	-4.69943905	-11.7182379	0.006159395	0.010084767	0.016452897	-7.29802227
F630	L	1.25	-4.69943905	-7.8119874	0.006159395	0.010084767	0.008753655	5.722171307
F630	L	2.5	-4.69943905	1.406762838	0.006159395	0.010084767	0.001054411	9.810072899
F630	L	3.75	-4.69943905	10.62551308	0.006159395	0.010084767	-0.00664483	2.205264568
F630	L	5	-4.69943905	14.53176308	0.006159395	0.010084767	-0.01434408	-14.3318357
F630	EX	0	-54.3400307	7.779901028	0.207210854	0.007983821	0.537075937	20.911026
F630	EX	1.25	-54.3400307	7.779901028	0.207210854	0.007983821	0.278062433	11.18614769
F630	EX	2.5	-54.3400307	7.779901028	0.207210854	0.007983821	0.019048842	1.461271644
F630	EX	3.75	-54.3400307	7.779901028	0.207210854	0.007983821	-0.23996472	-8.26360512
F630	EX	5	-54.3400307	7.779901028	0.207210854	0.007983821	-0.49897832	-17.9884815
F630	EY	0	0.000414883	0.000453111	0.494735003	0.00142552	1.397454262	0.000392419
F630	EY	1.25	0.000414883	0.000453111	0.494735003	0.00142552	0.779035509	-0.00017397
F630	EY	2.5	0.000414883	0.000453111	0.494735003	0.00142552	0.160616696	-0.00074036
F630	EY	3.75	0.000414883	0.000453111	0.494735003	0.00142552	-0.45780209	-0.00130675
F630	EY	5	0.000414883	0.000453111	0.494735003	0.00142552	-1.07622087	-0.00187314
F630	COMB1	0	0.171350613	-69.225174	-0.02259769	0.040681269	-0.06086135	-53.0226364
F630	COMB1	1.25	0.171350613	-45.6464272	-0.02259769	0.040681269	-0.03261423	22.67185593
F630	COMB1	2.5	0.171350613	3.389817238	-0.02259769	0.040681269	-0.00436711	49.48781204
F630	COMB1	3.75	0.171350613	52.42606354	-0.02259769	0.040681269	0.023880009	14.19731331
F630	COMB1	5	0.171350613	76.00480652	-0.02259769	0.040681269	0.052127123	-69.9717255
F630	COMB2	0	-50.9929771	-39.8054008	0.343848825	0.033366431	0.924966633	-16.8334179
F630	COMB2	1.25	-50.9929771	-23.4122772	0.343848825	0.033366431	0.495155632	25.20692635
F630	COMB2	2.5	-50.9929771	9.492092133	0.343848825	0.033366431	0.065344557	34.17008972
F630	COMB2	3.75	-50.9929771	42.39646149	0.343848825	0.033366431	-0.36446649	1.476694465
F630	COMB2	5	-50.9929771	58.78958511	0.343848825	0.033366431	-0.79427755	-64.2938843
F630	COMB3	0	-11.8678503	-45.4065971	0.558287263	0.028665839	1.565400839	-31.8890686
F630	COMB3	1.25	-11.8678503	-29.0134735	0.558287263	0.028665839	0.86754179	17.1527729
F630	COMB3	2.5	-11.8678503	3.890896797	0.558287263	0.028665839	0.169682667	33.11742783
F630	COMB3	3.75	-11.8678503	36.79526901	0.558287263	0.028665839	-0.52817643	7.42552948
F630	COMB3	5	-11.8678503	53.18838882	0.558287263	0.028665839	-1.22603548	-51.3435516
F631	D	0	8.298264503	-43.083683	-0.02459948	0.167594001	-0.0439624	-43.1223984
F631	D	1.25	8.298264503	-28.6430607	-0.02459948	0.167594001	-0.01321305	3.87153244
F631	D	2.5	8.298264503	-0.07119125	-0.02459948	0.167594001	0.017536299	22.04306984
F631	D	3.75	8.298264503	28.50067902	-0.02459948	0.167594001	0.048285656	4.049510479
F631	D	5	8.298264503	42.94130325	-0.02459948	0.167594001	0.079035006	-42.7664413
F631	L	0	-5.14129782	-12.9960155	0.010803494	0.056686923	0.025941091	-12.8579845
F631	L	1.25	-5.14129782	-9.08976555	0.010803494	0.056686923	0.012436723	1.75943172
F631	L	2.5	-5.14129782	0.128984749	0.010803494	0.056686923	-0.00106765	7.444555283
F631	L	3.75	-5.14129782	9.347735405	0.010803494	0.056686923	-0.01457201	1.436969876
F631	L	5	-5.14129782	13.2539854	0.010803494	0.056686923	-0.02807638	-13.5029078
F631	EX	0	-42.2438393	6.517789841	0.161720097	0.011573006	0.435423017	16.63646126
F631	EX	1.25	-42.2438393	6.517789841	0.161720097	0.011573006	0.233272895	8.489222527
F631	EX	2.5	-42.2438393	6.517789841	0.161720097	0.011573006	0.031122781	0.341985106
F631	EX	3.75	-42.2438393	6.517789841	0.161720097	0.011573006	-0.17102733	-7.80525255
F631	EX	5	-42.2438393	6.517789841	0.161720097	0.011573006	-0.37317747	-15.9524899
F631	EY	0	-0.00094121	-0.00049668	1.289874792	0.045103543	3.156149864	-0.00146916
F631	EY	1.25	-0.00094121	-0.00049668	1.289874792	0.045103543	1.543806314	-0.00084831
F631	EY	2.5	-0.00094121	-0.00049668	1.289874792	0.045103543	-0.06853733	-0.00022745
F631	EY	3.75	-0.00094121	-0.00049668	1.289874792	0.045103543	-1.6808809	0.000393402
F631	EY	5	-0.00094121	-0.00049668	1.289874792	0.045103543	-3.29322457	0.001014256
F631	COMB1	0	1.731840253	-72.4940491	-0.01223379	0.291811883	-0.01124914	-72.3196487
F631	COMB1	1.25	1.731840253	-48.9152985	-0.01223379	0.291811883	0.004043093	7.460929394
F631	COMB1	2.5	1.731840253	0.120946109	-0.01223379	0.291811883	0.019335328	38.36297226
F631	COMB1	3.75	1.731840253	49.15719223	-0.01223379	0.291811883	0.034627564	7.158564568
F631	COMB1	5	1.731840253	72.73593903	-0.01223379	0.291811883	0.049919795	-72.9243851
F631	COMB2	0	-36.6290016	-42.5858574	0.551264524	0.220015764	1.406860948	-32.110508
F631	COMB2	1.25	-36.6290016	-26.1927338	0.551264524	0.220015764	0.717780292	13.40540791
F631	COMB2	2.5	-36.6290016	6.711635113	0.551264524	0.220015764	0.028699625	25.84414101
F631	COMB2	3.75	-36.6290016	39.61600494	0.551264524	0.220015764	-0.66038102	-3.37368059
F631	COMB2	5	-36.6290016	56.00912857	0.551264524	0.220015764	-1.34946179	-65.6686859
F631	COMB3	0	-6.21412897	-47.2790298	1.382884026	0.244834304	3.413126707	-44.0898399
F631	COMB3	1.25	-6.21412897	-30.8859081	1.382884026	0.244834304	1.684521556	7.292544365
F631	COMB3	2.5	-6.21412897	2.018461704	1.382884026	0.244834304	-0.04408371	25.5977459
F631	COMB3	3.75	-6.21412897	34.92283249	1.382884026	0.244834304	-1.77268887	2.246390343
F631	COMB3	5	-6.21412897	51.31595612	1.382884026	0.244834304	-3.50129414	-54.182148
F632	D	0	8.907505035	-42.9520149	0.00277241	-0.00016399	-0.00639725	-41.9716682
F632	D	1.25	8.907505035	-28.5113945	0.00277241	-0.00016399	-0.00986276	4.857679367
F632	D	2.5	8.907505035	0.060475882	0.00277241	-0.00016399	-0.01332828	22.86463356
F632	D	3.75	8.907505035	28.6323452	0.00277241	-0.00016399	-0.01679379	4.706489563
F632	D	5	8.907505035	43.07296753	0.00277241	-0.00016399	-0.0202593	-42.274044
F632	L	0	-4.78108168	-12.9500122	0.001998811	-0.00032679	0.005807223	-12.9635916

F634	COMB1	0	0.551876605	-76.2084885	0.057509061	-0.02955086	0.135839894	-70.5296707
F634	COMB1	1.25	0.551876605	-52.6297379	0.057509061	-0.02955086	0.063953564	13.89396095
F634	COMB1	2.5	0.551876605	-3.59349394	0.057509061	-0.02955086	-0.00793277	49.4390564
F634	COMB1	3.75	0.551876605	45.44275284	0.057509061	-0.02955086	-0.0798191	22.87769508
F634	COMB1	5	0.551876605	69.021492	0.057509061	-0.02955086	-0.15170543	-52.5622025
F634	COMB2	0	1.079776049	-43.0891571	0.097924866	-0.01035406	0.270418197	-28.1886902
F634	COMB2	1.25	1.079776049	-26.6960335	0.097924866	-0.01035406	0.148012117	17.95635414
F634	COMB2	2.5	1.079776049	6.208334923	0.097924866	-0.01035406	0.025606036	31.02421379
F634	COMB2	3.75	1.079776049	39.11270523	0.097924866	-0.01035406	-0.09680005	2.435516596
F634	COMB2	5	1.079776049	55.50582504	0.097924866	-0.01035406	-0.21920614	-59.2303658
F634	COMB3	0	4.225541115	-48.6032639	-0.41106004	-0.01700106	-0.87108535	-40.9194107
F634	COMB3	1.25	4.225541115	-32.210144	-0.41106004	-0.01700106	-0.35726032	12.11827183
F634	COMB3	2.5	4.225541115	0.694226682	-0.41106004	-0.01700106	0.156564772	32.07876587
F634	COMB3	3.75	4.225541115	33.59859848	-0.41106004	-0.01700106	0.670389831	10.38270473
F634	COMB3	5	4.225541115	49.99171829	-0.41106004	-0.01700106	1.18421495	-44.3905411
F635	D	0	-10.6602373	-74.3189392	0.320827127	12.67492104	0.487984508	-84.2748642
F635	D	0.75	-10.6602373	-61.9786453	0.320827127	12.67492104	0.247364447	-32.9295349
F635	D	1.5	-10.6602373	-45.897728	0.320827127	12.67492104	0.006744392	7.757847309
F635	D	2.25	-10.6602373	-29.8168087	0.320827127	12.67492104	-0.23387568	35.91697693
F635	D	3	-10.6602373	-17.476511	0.320827127	12.67492104	-0.47449574	53.4181633
F635	L	0	-2.22119045	-11.437149	-0.19888619	4.178195	-0.30233276	-14.7109499
F635	L	0.75	-2.22119045	-10.734025	-0.19888619	4.178195	-0.15316831	-6.30887794
F635	L	1.5	-2.22119045	-8.62465286	-0.19888619	4.178195	-0.00400384	1.038508534
F635	L	2.25	-2.22119045	-6.51527977	-0.19888619	4.178195	0.14516063	6.62808609
F635	L	3	-2.22119045	-5.8121562	-0.19888619	4.178195	0.294325083	11.16297913
F635	EX	0	0.137160361	0.526208043	-1.57878625	-1.39304864	-2.31774092	0.887581229
F635	EX	0.75	0.137160361	0.526208043	-1.57878625	-1.39304864	-1.13365245	0.492925644
F635	EX	1.5	0.137160361	0.526208043	-1.57878625	-1.39304864	0.050435867	0.098270088
F635	EX	2.25	0.137160361	0.526208043	-1.57878625	-1.39304864	1.234524131	-0.2963855
F635	EX	3	0.137160361	0.526208043	-1.57878625	-1.39304864	2.41861248	-0.69104105
F635	EY	0	-18.9991646	5.212248802	-0.37163901	-7.0376E-05	-0.70569444	15.75420761
F635	EY	0.75	-18.9991646	5.212248802	-0.37163901	-7.0376E-05	-0.42696556	11.84502697
F635	EY	1.5	-18.9991646	5.212248802	-0.37163901	-7.0376E-05	-0.14823663	7.935844421
F635	EY	2.25	-18.9991646	5.212248802	-0.37163901	-7.0376E-05	0.130492285	4.02666235
F635	EY	3	-18.9991646	5.212248802	-0.37163901	-7.0376E-05	0.409221202	0.117480159
F635	COMB1	0	-16.3461895	-107.48217	0.066774666	21.89501762	0.101848997	-124.667358
F635	COMB1	0.75	-16.3461895	-91.5488129	0.066774666	21.89501762	0.051768046	-49.6096458
F635	COMB1	1.5	-16.3461895	-68.8767166	0.066774666	21.89501762	0.001687122	10.97103024
F635	COMB1	2.25	-16.3461895	-46.2046165	0.066774666	21.89501762	-0.04839381	53.70531082
F635	COMB1	3	-16.3461895	-30.2712612	0.066774666	21.89501762	-0.09847476	81.96256256
F635	COMB2	0	-17.7357006	-79.4511108	-1.4768908	13.182971	-2.20400667	-87.241333
F635	COMB2	0.75	-17.7357006	-66.2723083	-1.4768908	13.182971	-1.0963397	-32.321949
F635	COMB2	1.5	-17.7357006	-48.7228966	-1.4768908	13.182971	0.011326985	11.07437038
F635	COMB2	2.25	-17.7357006	-31.1734772	-1.4768908	13.182971	1.11899364	40.76231003
F635	COMB2	3	-17.7357006	-17.9946804	-1.4768908	13.182971	2.22666049	58.92718506
F635	COMB3	0	-31.7988415	-75.9989777	-0.61331928	14.18591404	-1.0539186	-76.3010483
F635	COMB3	0.75	-31.7988415	-62.820179	-0.61331928	14.18591404	-0.59392971	-23.9707603
F635	COMB3	1.5	-31.7988415	-45.2707634	-0.61331928	14.18591404	-0.13394077	16.83646202
F635	COMB3	2.25	-31.7988415	-27.721344	-0.61331928	14.18591404	0.326048136	43.93530655
F635	COMB3	3	-31.7988415	-14.5425482	-0.61331928	14.18591404	0.786037087	59.51108551
F636	D	0	-13.1603928	-82.3364716	0.233731002	-1.17821479	0.368612498	-104.872459
F636	D	0.75	-13.1603928	-75.6258545	0.233731002	-1.17821479	0.193314463	-45.169075
F636	D	1.5	-13.1603928	-61.4339981	0.233731002	-1.17821479	0.018016418	6.695890903
F636	D	2.25	-13.1603928	-47.2421417	0.233731002	-1.17821479	-0.15728162	46.98182297
F636	D	3	-13.1603928	-40.5315247	0.233731002	-1.17821479	-0.33257967	79.42932892
F636	L	0	-4.49021435	-24.7655087	-0.12596686	-0.4519957	-0.19404477	-32.3063393
F636	L	0.75	-4.49021435	-23.3592587	-0.12596686	-0.4519957	-0.09956972	-14.0837908
F636	L	1.5	-4.49021435	-19.1405144	-0.12596686	-0.4519957	-0.00509467	2.029387712
F636	L	2.25	-4.49021435	-14.9217701	-0.12596686	-0.4519957	0.089380369	14.62694931
F636	L	3	-4.49021435	-13.515522	-0.12596686	-0.4519957	0.183855414	25.11514091
F636	EX	0	-0.24984135	-0.14708365	-0.71191329	-1.72187328	-1.04356956	-0.20812072
F636	EX	0.75	-0.24984135	-0.14708365	-0.71191329	-1.72187328	-0.50963527	-0.0978081
F636	EX	1.5	-0.24984135	-0.14708365	-0.71191329	-1.72187328	0.024299139	0.012504516
F636	EX	2.25	-0.24984135	-0.14708365	-0.71191329	-1.72187328	0.5582335	0.122817136
F636	EX	3	-0.24984135	-0.14708365	-0.71191329	-1.72187328	1.092167854	0.23312974
F636	EY	0	-19.1323681	5.189616203	-1.10198939	0.003300153	-2.07913709	15.69638824
F636	EY	0.75	-19.1323681	5.189616203	-1.10198939	0.003300153	-1.25264597	11.80417919
F636	EY	1.5	-19.1323681	5.189616203	-1.10198939	0.003300153	-0.42615491	7.911972046
F636	EY	2.25	-19.1323681	5.189616203	-1.10198939	0.003300153	0.400336146	4.019764423
F636	EY	3	-19.1323681	5.189616203	-1.10198939	0.003300153	1.226827145	0.127557054
F636	COMB1	0	-22.9768143	-138.428574	0.078930207	-2.13705087	0.131863385	-177.537094
F636	COMB1	0.75	-22.9768143	-128.125839	0.078930207	-2.13705087	0.072665818	-76.7369537
F636	COMB1	1.5	-22.9768143	-104.345619	0.078930207	-2.13705087	0.013468225	11.28208923
F636	COMB1	2.25	-22.9768143	-80.5653992	0.078930207	-2.13705087	-0.04572936	79.78130341
F636	COMB1	3	-22.9768143	-70.2626648	0.078930207	-2.13705087	-0.10492694	135.4994202
F636	COMB2	0	-21.5181122	-92.7719345	-0.87821889	-3.16060352	-1.40910363	-115.563622
F636	COMB2	0.75	-21.5181122	-85.2828217	-0.87821889	-3.16060352	-0.75044024	-48.2468376
F636	COMB2	1.5	-21.5181122	-69.0524597	-0.87821889	-3.16060352	-0.09177677	10.17515564
F636	COMB2	2.25	-21.5181122	-52.8221092	-0.87821889	-3.16060352	0.566886663	55.33174515
F636	COMB2	3	-21.5181122	-45.3329964	-0.87821889	-3.16060352	1.225550056	91.59353638
F636	COMB3	0	-35.4005165	-88.8516617	-1.17560351	-1.91842914	-2.1858995	-103.87693
F636	COMB3	0.75	-35.4005165	-81.3625488	-1.17560351	-1.91842914	-1.30419767	-39.5003433
F636	COMB3	1.5	-35.4005165	-65.1321945	-1.17560351	-1.91842914	-0.42249599	15.98145199
F636	COMB3	2.25	-35.4005165	-48.9018402	-1.17560351	-1.91842914	0.459205627	58.19784164

F636	COMB3	3	-35.4005165	-41.4127274	-1.17560351	-1.91842914	1.340907216	91.51943207
F637	D	0	-21.0316639	-80.393013	0.046626512	0.035799187	0.047194269	-103.213074
F637	D	0.75	-21.0316639	-73.6823959	0.046626512	0.035799187	0.012224423	-44.9672813
F637	D	1.5	-21.0316639	-59.4905396	0.046626512	0.035799187	-0.02274542	5.440085888
F637	D	2.25	-21.0316639	-45.298687	0.046626512	0.035799187	-0.05771526	44.26842499
F637	D	3	-21.0316639	-38.5880661	0.046626512	0.035799187	-0.09268511	75.25834656
F637	L	0	-6.69036865	-24.1182022	-0.04182013	-0.00606917	-0.06568328	-31.7819271
F637	L	0.75	-6.69036865	-22.711956	-0.04182013	-0.00606917	-0.03431821	-14.0448561
F637	L	1.5	-6.69036865	-18.4932098	-0.04182013	-0.00606917	-0.00295315	1.582843542
F637	L	2.25	-6.69036865	-14.2744646	-0.04182013	-0.00606917	0.028411902	13.69492626
F637	L	3	-6.69036865	-12.8682156	-0.04182013	-0.00606917	0.059776966	23.69763947
F637	EX	0	-0.24833404	-0.108774	-0.15806594	-1.46979237	-0.27119282	-0.2852506
F637	EX	0.75	-0.24833404	-0.108774	-0.15806594	-1.46979237	-0.1526435	-0.20367019
F637	EX	1.5	-0.24833404	-0.108774	-0.15806594	-1.46979237	-0.03409418	-0.12208979
F637	EX	2.25	-0.24833404	-0.108774	-0.15806594	-1.46979237	0.08445514	-0.04050938
F637	EX	3	-0.24833404	-0.108774	-0.15806594	-1.46979237	0.20300445	0.04107102
F637	EY	0	-18.9327908	4.754145622	-0.76530802	0.003232411	-1.46853602	14.49776363
F637	EY	0.75	-18.9327908	4.754145622	-0.76530802	0.003232411	-0.89455569	10.93215942
F637	EY	1.5	-18.9327908	4.754145622	-0.76530802	0.003232411	-0.3205753	7.36655426
F637	EY	2.25	-18.9327908	4.754145622	-0.76530802	0.003232411	0.253405064	3.800949097
F637	EY	3	-18.9327908	4.754145622	-0.76530802	0.003232411	0.827385426	0.235344127
F637	COMB1	0	-35.942585	-135.060745	-0.01096039	0.03324835	-0.04846012	-174.706772
F637	COMB1	0.75	-35.942585	-124.758003	-0.01096039	0.03324835	-0.04023983	-76.4325104
F637	COMB1	1.5	-35.942585	-100.977783	-0.01096039	0.03324835	-0.03201955	9.060652733
F637	COMB1	2.25	-35.942585	-77.1975708	-0.01096039	0.03324835	-0.02379927	75.03398895
F637	COMB1	3	-35.942585	-66.8948288	-0.01096039	0.03324835	-0.01557899	128.2262268
F637	COMB2	0	-30.4115677	-90.6249237	-0.36888579	-1.48453951	-0.71440965	-114.113472
F637	COMB2	0.75	-30.4115677	-83.1358109	-0.36888579	-1.48453951	-0.43774566	-48.4069443
F637	COMB2	1.5	-30.4115677	-66.9054565	-0.36888579	-1.48453951	-0.16108164	8.404788017
F637	COMB2	2.25	-30.4115677	-50.6751022	-0.36888579	-1.48453951	0.115582384	51.95111847
F637	COMB2	3	-30.4115677	-43.1859856	-0.36888579	-1.48453951	0.392246395	86.60266113
F637	COMB3	0	-44.1483688	-87.0523071	-0.81757975	-0.42391321	-1.59852481	-103.252235
F637	COMB3	0.75	-44.1483688	-79.5631943	-0.81757975	-0.42391321	-0.98534077	-40.2251663
F637	COMB3	1.5	-44.1483688	-63.33284	-0.81757975	-0.42391321	-0.37215668	13.90711021
F637	COMB3	2.25	-44.1483688	-47.1024895	-0.81757975	-0.42391321	0.241027415	54.773983
F637	COMB3	3	-44.1483688	-39.613369	-0.81757975	-0.42391321	0.854211509	86.74606323
F638	D	0	-21.0366516	-80.3431931	-0.05347712	-0.09544056	-0.06699162	-103.136032
F638	D	0.75	-21.0366516	-73.632576	-0.05347712	-0.09544056	-0.02688382	-44.9276123
F638	D	1.5	-21.0366516	-59.4407196	-0.05347712	-0.09544056	0.013223976	5.442391396
F638	D	2.25	-21.0366516	-45.2488632	-0.05347712	-0.09544056	0.053331774	44.23336411
F638	D	3	-21.0366516	-38.5382462	-0.05347712	-0.09544056	0.093439572	75.18591309
F638	L	0	-6.83643961	-24.2340469	0.027554635	0.060409181	0.035638709	-31.9508591
F638	L	0.75	-6.83643961	-22.8278008	0.027554635	0.060409181	0.014972757	-14.1269064
F638	L	1.5	-6.83643961	-18.6090546	0.027554635	0.060409181	-0.00569319	1.587676406
F638	L	2.25	-6.83643961	-14.3903093	0.027554635	0.060409181	-0.02635915	13.78664207
F638	L	3	-6.83643961	-12.9840603	0.027554635	0.060409181	-0.0470251	23.87623787
F638	EX	0	0.120048665	0.103154331	0.24185361	-1.46359181	0.321864545	0.273787081
F638	EX	0.75	0.120048665	0.103154331	0.24185361	-1.46359181	0.140474528	0.196421415
F638	EX	1.5	0.120048665	0.103154331	0.24185361	-1.46359181	-0.04091547	0.11905577
F638	EX	2.25	0.120048665	0.103154331	0.24185361	-1.46359181	-0.22230546	0.041690107
F638	EX	3	0.120048665	0.103154331	0.24185361	-1.46359181	-0.40369546	-0.03567555
F638	EY	0	-18.9328251	4.75413847	0.765319347	-0.00323247	1.468557835	14.49774456
F638	EY	0.75	-18.9328251	4.75413847	0.765319347	-0.00323247	0.89456898	10.93214417
F638	EY	1.5	-18.9328251	4.75413847	0.765319347	-0.00323247	0.320580065	7.36654377
F638	EY	2.25	-18.9328251	4.75413847	0.765319347	-0.00323247	-0.25340882	3.800943851
F638	EY	3	-18.9328251	4.75413847	0.765319347	-0.00323247	-0.82739764	0.235344052
F638	COMB1	0	-36.1822853	-135.18631	-0.02008513	-0.01787399	-0.02336801	-174.884613
F638	COMB1	0.75	-36.1822853	-124.883575	-0.02008513	-0.01787399	-0.00830417	-76.5161896
F638	COMB1	1.5	-36.1822853	-101.103355	-0.02008513	-0.01787399	0.006759658	9.071151733
F638	COMB1	2.25	-36.1822853	-77.3231277	-0.02008513	-0.01787399	0.021823492	75.13866425
F638	COMB1	3	-36.1822853	-67.0203934	-0.02008513	-0.01787399	0.036887322	128.4250793
F638	COMB2	0	-30.0815525	-90.3897629	0.443922818	-1.59701943	0.736610532	-113.507202
F638	COMB2	0.75	-30.0815525	-82.90065	0.443922818	-1.59701943	0.403668791	-47.977047
F638	COMB2	1.5	-30.0815525	-66.6702881	0.443922818	-1.59701943	0.070727035	8.658312798
F638	COMB2	2.25	-30.0815525	-50.4399338	0.443922818	-1.59701943	-0.26221469	52.02827072
F638	COMB2	3	-30.0815525	-42.9508209	0.443922818	-1.59701943	-0.59515643	86.50343323
F638	COMB3	0	-44.0836143	-86.9697418	0.832297981	-0.54560918	1.58425808	-103.048485
F638	COMB3	0.75	-44.0836143	-79.480629	0.832297981	-0.54560918	0.960035324	-40.0833473
F638	COMB3	1.5	-44.0836143	-63.2502708	0.832297981	-0.54560918	0.335812539	13.98700333
F638	COMB3	2.25	-44.0836143	-47.0199127	0.832297981	-0.54560918	-0.28841025	54.79195023
F638	COMB3	3	-44.0836143	-39.5307999	0.832297981	-0.54560918	-0.912633	86.70209503
F639	D	0	-13.2889156	-82.4693832	-0.25392172	1.288908958	-0.41018501	-105.077065
F639	D	0.75	-13.2889156	-75.7587738	-0.25392172	1.288908958	-0.21974392	-45.2739983
F639	D	1.5	-13.2889156	-61.5669136	-0.25392172	1.288908958	-0.02930284	6.690650463
F639	D	2.25	-13.2889156	-47.3750572	-0.25392172	1.288908958	0.161138222	47.07626724
F639	D	3	-13.2889156	-40.6644402	-0.25392172	1.288908958	0.351579309	79.62346649
F639	L	0	-5.98071861	-34.7570305	0.106544912	0.594431996	0.154671118	-42.891407
F639	L	0.75	-5.98071861	-32.0851593	0.106544912	0.594431996	0.074762531	-17.4916344
F639	L	1.5	-5.98071861	-24.0695419	0.106544912	0.594431996	-0.00514606	3.900337219
F639	L	2.25	-5.98071861	-16.0539265	0.106544912	0.594431996	-0.08505465	18.61263657
F639	L	3	-5.98071861	-13.3820543	0.106544912	0.594431996	-0.16496325	29.31713104
F639	EX	0	-0.01502205	0.144321397	0.564074516	-1.69159412	0.873363018	0.204637662
F639	EX	0.75	-0.01502205	0.144321397	0.564074516	-1.69159412	0.450307578	0.096396729
F639	EX	1.5	-0.01502205	0.144321397	0.564074516	-1.69159412	0.027252164	-0.0118442

F639	EX	2.25	-0.01502205	0.144321397	0.564074516	-1.69159412	-0.39580327	-0.12008513
F639	EX	3	-0.01502205	0.144321397	0.564074516	-1.69159412	-0.81885868	-0.22832605
F639	EY	0	-19.1323662	5.189614773	1.101986289	-0.00330021	2.079130411	15.69638443
F639	EY	0.75	-19.1323662	5.189614773	1.101986289	-0.00330021	1.252641797	11.80417728
F639	EY	1.5	-19.1323662	5.189614773	1.101986289	-0.00330021	0.426153064	7.911970615
F639	EY	2.25	-19.1323662	5.189614773	1.101986289	-0.00330021	-0.40033567	4.019763947
F639	EY	3	-19.1323662	5.189614773	1.101986289	-0.00330021	-1.2268244	0.127556935
F639	COMB1	0	-25.5158482	-154.574509	-0.13423422	2.497781992	-0.2447482	-194.718735
F639	COMB1	0.75	-25.5158482	-142.24678	-0.13423422	2.497781992	-0.14407265	-82.3154144
F639	COMB1	1.5	-25.5158482	-112.391563	-0.13423422	2.497781992	-0.04339711	14.26932049
F639	COMB1	2.25	-25.5158482	-82.5363464	-0.13423422	2.497781992	0.057278436	86.27173615
F639	COMB1	3	-25.5158482	-70.2086182	-0.13423422	2.497781992	0.157953992	142.4555664
F639	COMB2	0	-21.87953	-95.7572174	0.697886646	-0.21123902	1.176883936	-118.685555
F639	COMB2	0.75	-21.87953	-87.8694382	0.697886646	-0.21123902	0.653469563	-49.2294769
F639	COMB2	1.5	-21.87953	-70.4430618	0.697886646	-0.21123902	0.130055204	10.73380089
F639	COMB2	2.25	-21.87953	-53.0166931	0.697886646	-0.21123902	-0.39335918	56.43499756
F639	COMB2	3	-21.87953	-45.1289101	0.697886646	-0.21123902	-0.91677356	92.64339447
F639	COMB3	0	-35.9310036	-92.0467606	1.101712942	1.004283071	2.076223373	-107.296051
F639	COMB3	0.75	-35.9310036	-84.1589813	1.101712942	1.004283071	1.249939799	-40.6228142
F639	COMB3	1.5	-35.9310036	-66.732605	1.101712942	1.004283071	0.423656166	16.55762672
F639	COMB3	2.25	-35.9310036	-49.3062401	1.101712942	1.004283071	-0.40262756	59.47598648
F639	COMB3	3	-35.9310036	-41.4184532	1.101712942	1.004283071	-1.22891116	92.90155029
F640	D	0	-12.7238159	-89.0906754	-0.34152067	-12.4621067	-0.52937067	-99.9259872
F640	D	0.75	-12.7238159	-74.8800659	-0.34152067	-12.4621067	-0.27323046	-37.9694481
F640	D	1.5	-12.7238159	-53.1882248	-0.34152067	-12.4621067	-0.01709028	10.52368546
F640	D	2.25	-12.7238159	-31.496376	-0.34152067	-12.4621067	0.239049911	41.81279755
F640	D	3	-12.7238159	-17.2857685	-0.34152067	-12.4621067	0.495190114	59.63850784
F640	L	0	-4.48418522	-27.0769272	0.187799707	-4.14488983	0.277621359	-31.3247013
F640	L	0.75	-4.48418522	-24.4050541	0.187799707	-4.14488983	0.136771753	-11.6849966
F640	L	1.5	-4.48418522	-16.3894386	0.187799707	-4.14488983	-0.00407786	3.946903944
F640	L	2.25	-4.48418522	-8.37382317	0.187799707	-4.14488983	-0.14492747	12.89913273
F640	L	3	-4.48418522	-5.70195103	0.187799707	-4.14488983	-0.28577709	17.84355927
F640	EX	0	0.253515482	-0.51761091	0.687083542	-1.3738749	1.084233999	-0.87204134
F640	EX	0.75	0.253515482	-0.51761091	0.687083542	-1.3738749	0.568921924	-0.48383358
F640	EX	1.5	0.253515482	-0.51761091	0.687083542	-1.3738749	0.053609796	-0.0956258
F640	EX	2.25	0.253515482	-0.51761091	0.687083542	-1.3738749	-0.46170232	0.292581975
F640	EX	3	0.253515482	-0.51761091	0.687083542	-1.3738749	-0.97701442	0.680789709
F640	EY	0	-18.999157	5.212250233	0.37163654	7.02856E-05	0.705689728	15.75421333
F640	EY	0.75	-18.999157	5.212250233	0.37163654	7.02856E-05	0.426962614	11.84502983
F640	EY	1.5	-18.999157	5.212250233	0.37163654	7.02856E-05	0.1482355	7.935846329
F640	EY	2.25	-18.999157	5.212250233	0.37163654	7.02856E-05	-0.1304916	4.026663303
F640	EY	3	-18.999157	5.212250233	0.37163654	7.02856E-05	-0.4092187	0.117480129
F640	COMB1	0	-22.4432755	-150.231903	-0.10934526	-21.5863514	-0.19105059	-170.030701
F640	COMB1	0.75	-22.4432755	-128.904175	-0.10934526	-21.5863514	-0.10904176	-64.2593307
F640	COMB1	1.5	-22.4432755	-90.0489731	-0.10934526	-21.5863514	-0.02703291	18.94346809
F640	COMB1	2.25	-22.4432755	-51.1937675	-0.10934526	-21.5863514	0.054975934	70.81397247
F640	COMB1	3	-22.4432755	-29.8660431	-0.10934526	-21.5863514	0.13698478	100.1158981
F640	COMB2	0	-20.4948711	-100.968315	0.528757215	-15.8127909	0.876085937	-110.729553
F640	COMB2	0.75	-20.4948711	-85.2055359	0.528757215	-15.8127909	0.479518503	-40.3182755
F640	COMB2	1.5	-20.4948711	-59.9041786	0.528757215	-15.8127909	0.082951002	14.69396305
F640	COMB2	2.25	-20.4948711	-34.6028175	0.528757215	-15.8127909	-0.31361651	49.53788376
F640	COMB2	3	-20.4948711	-18.8400402	0.528757215	-15.8127909	-0.71018398	68.98277283
F640	COMB3	0	-34.6417847	-96.7646255	0.307209909	-14.8235493	0.614119411	-98.5223389
F640	COMB3	0.75	-34.6417847	-81.0018463	0.307209909	-14.8235493	0.383712232	-31.2638187
F640	COMB3	1.5	-34.6417847	-55.7004929	0.307209909	-14.8235493	0.153305039	20.59566116
F640	COMB3	2.25	-34.6417847	-30.3991337	0.307209909	-14.8235493	-0.07710215	52.28682327
F640	COMB3	3	-34.6417847	-14.6363564	0.307209909	-14.8235493	-0.30750933	68.5789566
F641	D	0	0.60463953	-35.9890785	-0.01436159	0.001620247	-0.03571555	-25.4021931
F641	D	1.25	0.60463953	-23.3484573	-0.01436159	0.001620247	-0.01776356	13.84848022
F641	D	2.5	0.60463953	3.423413754	-0.01436159	0.001620247	0.000188423	26.52676201
F641	D	3.75	0.60463953	30.19528389	-0.01436159	0.001620247	0.018140407	5.289945126
F641	D	5	0.60463953	42.83590698	-0.01436159	0.001620247	0.036092393	-42.5192604
F641	L	0	-0.38523719	-11.9136515	0.005971326	0.000544621	0.015128514	-8.36288357
F641	L	1.25	-0.38523719	-8.00740051	0.005971326	0.000544621	0.007664355	4.901576519
F641	L	2.5	-0.38523719	1.211349487	0.005971326	0.000544621	0.000200198	9.233744621
F641	L	3.75	-0.38523719	10.43009949	0.005971326	0.000544621	-0.00726396	1.873202682
F641	L	5	-0.38523719	14.33635044	0.005971326	0.000544621	-0.01472812	-14.419631
F641	EX	0	-3.00193906	0.933695495	0.063622765	-0.00108493	0.161455885	2.783514977
F641	EX	1.25	-3.00193906	0.933695495	0.063622765	-0.00108493	0.081927426	1.616395593
F641	EX	2.5	-3.00193906	0.933695495	0.063622765	-0.00108493	0.002398959	0.449276149
F641	EX	3.75	-3.00193906	0.933695495	0.063622765	-0.00108493	-0.07712951	-0.71784317
F641	EX	5	-3.00193906	0.933695495	0.063622765	-0.00108493	-0.15665798	-1.88496256
F641	EY	0	-0.00638654	0.000292063	0.321143091	-0.00056179	0.812188089	-0.00035947
F641	EY	1.25	-0.00638654	0.000292063	0.321143091	-0.00056179	0.41075924	-0.00072455
F641	EY	2.5	-0.00638654	0.000292063	0.321143091	-0.00056179	0.009330354	-0.00108962
F641	EY	3.75	-0.00638654	0.000292063	0.321143091	-0.00056179	-0.39209852	-0.0014547
F641	EY	5	-0.00638654	0.000292063	0.321143091	-0.00056179	-0.79352742	-0.00181978
F641	COMB1	0	0.109187931	-62.2487335	-0.00767978	0.00281569	-0.01865304	-43.8632469
F641	COMB1	1.25	0.109187931	-40.8299904	-0.00767978	0.00281569	-0.00905331	24.46069908
F641	COMB1	2.5	0.109187931	6.046255589	-0.00767978	0.00281569	0.000546424	46.6061058
F641	COMB1	3.75	0.109187931	52.92250061	-0.00767978	0.00281569	0.010146154	9.345058441
F641	COMB1	5	0.109187931	74.34124756	-0.00767978	0.00281569	0.019745884	-74.0945282
F641	COMB2	0	-2.59549689	-40.5748634	0.153810948	0.000572947	0.390210271	-26.425787
F641	COMB2	1.25	-2.59549689	-26.071743	0.153810948	0.000572947	0.197946578	17.75764275

F641	COMB2	2.5	-2.59549689	4.942626476	0.153810948	0.000572947	0.00568289	31.22638702
F641	COMB2	3.75	-2.59549689	35.95699692	0.153810948	0.000572947	-0.18658079	5.401074886
F641	COMB2	5	-2.59549689	50.46012115	0.153810948	0.000572947	-0.37884447	-51.1389198
F641	COMB3	0	-0.43879485	-41.2469101	0.344042718	0.000941185	0.8709203	-28.4301815
F641	COMB3	1.25	-0.43879485	-26.7437897	0.344042718	0.000941185	0.440866858	16.59330368
F641	COMB3	2.5	-0.43879485	4.270580292	0.344042718	0.000941185	0.01081345	30.90210724
F641	COMB3	3.75	-0.43879485	35.28495026	0.344042718	0.000941185	-0.41923997	5.916852951
F641	COMB3	5	-0.43879485	49.78807449	0.344042718	0.000941185	-0.84929341	-49.7830849
F642	D	0	1.021690607	-39.6587372	-0.00313117	0.000645275	-0.00878242	-40.1403542
F642	D	1.25	1.021690607	-27.0181141	-0.00313117	0.000645275	-0.00486846	3.697392464
F642	D	2.5	1.021690607	-0.24624467	-0.00313117	0.000645275	-0.00095449	20.96274757
F642	D	3.75	1.021690607	26.52562523	-0.00313117	0.000645275	0.002959481	4.313004017
F642	D	5	1.021690607	39.16624832	-0.00313117	0.000645275	0.006873449	-38.9091301
F642	L	0	-0.61021703	-13.1944275	0.007485595	-0.0007185	0.018707676	-13.5146017
F642	L	1.25	-0.61021703	-9.28817749	0.007485595	-0.0007185	0.009350684	1.350829005
F642	L	2.5	-0.61021703	-0.06942736	0.007485595	-0.0007185	-6.31E-06	7.283967972
F642	L	3.75	-0.61021703	9.149323463	0.007485595	-0.0007185	-0.0093633	1.524397373
F642	L	5	-0.61021703	13.05557251	0.007485595	-0.0007185	-0.0187203	-13.1674652
F642	EX	0	-4.16156912	0.616269529	0.064812377	-0.00201445	0.162978858	1.557293892
F642	EX	1.25	-4.16156912	0.616269529	0.064812377	-0.00201445	0.08196339	0.786956906
F642	EX	2.5	-4.16156912	0.616269529	0.064812377	-0.00201445	0.000947919	0.016619993
F642	EX	3.75	-4.16156912	0.616269529	0.064812377	-0.00201445	-0.08006755	-0.75371689
F642	EX	5	-4.16156912	0.616269529	0.064812377	-0.00201445	-0.16108301	-1.52405381
F642	EY	0	-0.00347965	-0.00393026	0.667594254	-0.00874817	1.66253984	-0.00986359
F642	EY	1.25	-0.00347965	-0.00393026	0.667594254	-0.00874817	0.828047037	-0.00495077
F642	EY	2.5	-0.00347965	-0.00393026	0.667594254	-0.00874817	-0.00644576	-3.7936E-05
F642	EY	3.75	-0.00347965	-0.00393026	0.667594254	-0.00874817	-0.84093857	0.004874893
F642	EY	5	-0.00347965	-0.00393026	0.667594254	-0.00874817	-1.67543149	0.009787722
F642	COMB1	0	0.249681428	-68.7015686	0.008219542	-0.00037527	0.019393373	-69.7917862
F642	COMB1	1.25	0.249681428	-47.2828217	0.008219542	-0.00037527	0.009118947	6.59819746
F642	COMB1	2.5	0.249681428	-0.40657738	0.008219542	-0.00037527	-0.00115548	36.80964661
F642	COMB1	3.75	0.249681428	46.46966553	0.008219542	-0.00037527	-0.01142991	7.614640236
F642	COMB1	5	0.249681428	67.88841248	0.008219542	-0.00037527	-0.02170433	-67.7589035
F642	COMB2	0	-3.42776346	-45.1613159	0.276443213	-0.00438942	0.689054549	-44.7957802
F642	COMB2	1.25	-3.42776346	-30.6581936	0.276443213	-0.00438942	0.343500495	5.120714188
F642	COMB2	2.5	-3.42776346	0.356174409	0.276443213	-0.00438942	-0.00205352	24.32252502
F642	COMB2	3.75	-3.42776346	31.37054443	0.276443213	-0.00438942	-0.34760755	4.230278015
F642	COMB2	5	-3.42776346	45.87366867	0.276443213	-0.00438942	-0.69316161	-46.5766487
F642	COMB3	0	-0.43399119	-45.6079216	0.720460057	-0.00936892	1.793676496	-45.9242783
F642	COMB3	1.25	-0.43399119	-31.1047974	0.720460057	-0.00936892	0.893101454	4.550466537
F642	COMB3	2.5	-0.43399119	-0.0904284	0.720460057	-0.00936892	-0.00747365	24.31052971
F642	COMB3	3.75	-0.43399119	30.92394066	0.720460057	-0.00936892	-0.90804881	4.776536942
F642	COMB3	5	-0.43399119	45.42706299	0.720460057	-0.00936892	-1.80862391	-45.4721375
F643	D	0	1.133472443	-39.414814	0.003223834	4.56836E-05	0.009729881	-38.9657593
F643	D	1.25	1.133472443	-26.7741928	0.003223834	4.56836E-05	0.005700088	4.567082882
F643	D	2.5	1.133472443	-0.00232226	0.003223834	4.56836E-05	0.001670295	21.52753639
F643	D	3.75	1.133472443	26.76954651	0.003223834	4.56836E-05	-0.0023595	4.572888374
F643	D	5	1.133472443	39.41016769	0.003223834	4.56836E-05	-0.00638929	-38.9541512
F643	L	0	-0.67450643	-13.0675497	0.002822463	0.000101273	0.006849787	-13.1497898
F643	L	1.25	-0.67450643	-9.16129875	0.002822463	0.000101273	0.003321708	1.55704236
F643	L	2.5	-0.67450643	0.057451546	0.002822463	0.000101273	-0.00020637	7.331582546
F643	L	3.75	-0.67450643	9.276201248	0.002822463	0.000101273	-0.00373445	1.413413525
F643	L	5	-0.67450643	13.1824522	0.002822463	0.000101273	-0.00726253	-13.437048
F643	EX	0	-3.93102074	0.564603984	0.182915822	0.003514299	0.456982911	1.411340833
F643	EX	1.25	-3.93102074	0.564603984	0.182915822	0.003514299	0.228338093	0.705585837
F643	EX	2.5	-3.93102074	0.564603984	0.182915822	0.003514299	-0.00030668	-0.00016918
F643	EX	3.75	-3.93102074	0.564603984	0.182915822	0.003514299	-0.22895147	-0.70592415
F643	EX	5	-3.93102074	0.564603984	0.182915822	0.003514299	-0.45759627	-1.41167915
F643	EY	0	0.003709613	6.15103E-09	-5.046E-06	-1.2984E-07	-0.01401962	0.002141907
F643	EY	1.25	0.003709613	6.15103E-09	-5.046E-06	-1.2984E-07	-0.01401331	0.002141899
F643	EY	2.5	0.003709613	6.15103E-09	-5.046E-06	-1.2984E-07	-0.01400701	0.002141892
F643	EY	3.75	0.003709613	6.15103E-09	-5.046E-06	-1.2984E-07	-0.0140007	0.002141884
F643	EY	5	0.003709613	6.15103E-09	-5.046E-06	-1.2984E-07	-0.01399439	0.002141876
F643	COMB1	0	0.280956596	-68.2058563	0.008384543	0.000216857	0.022635516	-67.7985764
F643	COMB1	1.25	0.280956596	-46.7871094	0.008384543	0.000216857	0.012154838	7.971766949
F643	COMB1	2.5	0.280956596	0.089135759	0.008384543	0.000216857	0.00167416	37.56357574
F643	COMB1	3.75	0.280956596	46.96537781	0.008384543	0.000216857	-0.00880652	7.748927593
F643	COMB1	5	0.280956596	68.38412476	0.008384543	0.000216857	-0.0192872	-68.2442551
F643	COMB2	0	-3.0897615	-44.9174652	0.193590388	0.003717127	0.480935186	-43.5948181
F643	COMB2	1.25	-3.0897615	-30.4143448	0.193590388	0.003717127	0.238947168	6.016861439
F643	COMB2	2.5	-3.0897615	0.600023985	0.193590388	0.003717127	-0.00304082	24.91386032
F643	COMB2	3.75	-3.0897615	31.61439323	0.193590388	0.003717127	-0.24502881	4.516801357
F643	COMB2	5	-3.0897615	46.11751556	0.193590388	0.003717127	-0.48701683	-46.5949402
F643	COMB3	0	-0.25669995	-45.3239822	0.06188729	0.001186737	0.141603068	-44.6094093
F643	COMB3	1.25	-0.25669995	-30.8208599	0.06188729	0.001186737	0.06424395	5.510413647
F643	COMB3	2.5	-0.25669995	0.193509132	0.06188729	0.001186737	-0.01311516	24.91555595
F643	COMB3	3.75	-0.25669995	31.20787811	0.06188729	0.001186737	-0.09047427	5.026640892
F643	COMB3	5	-0.25669995	45.71099854	0.06188729	0.001186737	-0.16783339	-45.5769577
F644	D	0	1.037572503	-39.075386	0.01129528	-0.00063641	0.027346389	-38.7820129
F644	D	1.25	1.037572503	-26.4347649	0.01129528	-0.00063641	0.013227289	4.326548576
F644	D	2.5	1.037572503	0.337104917	0.01129528	-0.00063641	-0.00089181	20.86271667
F644	D	3.75	1.037572503	27.10897446	0.01129528	-0.00063641	-0.01501091	3.483786106
F644	D	5	1.037572503	39.74959564	0.01129528	-0.00063641	-0.02913002	-40.4675369
F644	L	0	-0.60671526	-13.1958599	0.002859856	0.000895007	0.007162806	-13.5634012

F646	COMB1	0	-16.3538685	31.97747421	-0.04241331	-21.9682293	-0.07982167	81.95974731
F646	COMB1	0.75	-16.3538685	47.91081619	-0.04241331	-21.9682293	-0.04801178	52.42286682
F646	COMB1	1.5	-16.3538685	70.58289337	-0.04241331	-21.9682293	-0.01620188	8.408981323
F646	COMB1	2.25	-16.3538685	93.25497437	-0.04241331	-21.9682293	0.01560804	-53.4512672
F646	COMB1	3	-16.3538685	109.1883163	-0.04241331	-21.9682293	0.047417931	-129.788528
F646	COMB2	0	-17.5818882	22.58018303	1.118606091	-13.242816	1.836450338	58.92661285
F646	COMB2	0.75	-17.5818882	35.75897217	1.118606091	-13.242816	0.99749738	37.32263947
F646	COMB2	1.5	-17.5818882	53.3083725	1.118606091	-13.242816	0.158544466	4.195613384
F646	COMB2	2.25	-17.5818882	70.85778046	1.118606091	-13.242816	-0.68040842	-42.6397629
F646	COMB2	3	-17.5818882	84.03656006	1.118606091	-13.242816	-1.51936126	-100.998184
F646	COMB3	0	-31.4547958	26.70436287	-0.17452443	-14.2442675	-0.08488316	59.51014328
F646	COMB3	0.75	-31.4547958	39.88315201	-0.17452443	-14.2442675	0.046009891	34.81303787
F646	COMB3	1.5	-31.4547958	57.43255234	-0.17452443	-14.2442675	0.17690295	-1.40711367
F646	COMB3	2.25	-31.4547958	74.98195648	-0.17452443	-14.2442675	0.307796031	-51.3356171
F646	COMB3	3	-31.4547958	88.16073608	-0.17452443	-14.2442675	0.438689083	-112.78717
F647	D	0	-13.1491623	41.96311951	-0.18331999	1.200694203	-0.28770486	79.43030548
F647	D	0.75	-13.1491623	48.67372894	-0.18331999	1.200694203	-0.15021513	45.9091301
F647	D	1.5	-13.1491623	62.86557388	-0.18331999	1.200694203	-0.0127254	4.549553871
F647	D	2.25	-13.1491623	77.05742645	-0.18331999	1.200694203	0.124764323	-48.3890381
F647	D	3	-13.1491623	83.76802826	-0.18331999	1.200694203	0.26225403	-109.166039
F647	L	0	-4.48869991	14.01525593	0.099012963	0.453033298	0.150419608	25.11640167
F647	L	0.75	-4.48869991	15.42150307	0.099012963	0.453033298	0.076160051	14.25342083
F647	L	1.5	-4.48869991	19.64024544	0.099012963	0.453033298	0.00190048	1.28107214
F647	L	2.25	-4.48869991	23.85898781	0.099012963	0.453033298	-0.07235909	-15.2068872
F647	L	3	-4.48869991	25.26523399	0.099012963	0.453033298	-0.14661866	-33.8042145
F647	EX	0	-0.24865173	0.170342281	0.447716981	1.720383048	0.772531033	0.234059259
F647	EX	0.75	-0.24865173	0.170342281	0.447716981	1.720383048	0.436744004	0.106302813
F647	EX	1.5	-0.24865173	0.170342281	0.447716981	1.720383048	0.100956954	-0.02145365
F647	EX	2.25	-0.24865173	0.170342281	0.447716981	1.720383048	-0.2348301	-0.1492101
F647	EX	3	-0.24865173	0.170342281	0.447716981	1.720383048	-0.57061714	-0.27696657
F647	EY	0	-18.7859154	5.193838596	-1.10489631	-0.00474366	-1.22924006	0.135743439
F647	EY	0.75	-18.7859154	5.193838596	-1.10489631	-0.00474366	-0.40056953	-3.75962758
F647	EY	1.5	-18.7859154	5.193838596	-1.10489631	-0.00474366	0.428101003	-7.65499878
F647	EY	2.25	-18.7859154	5.193838596	-1.10489631	-0.00474366	1.256771564	-11.5503702
F647	EY	3	-18.7859154	5.193838596	-1.10489631	-0.00474366	2.085442066	-15.4457407
F647	COMB1	0	-22.9609146	72.78015137	-0.06156325	2.165686369	-0.10457443	135.5026093
F647	COMB1	0.75	-22.9609146	83.08287811	-0.06156325	2.165686369	-0.05840208	77.89643097
F647	COMB1	1.5	-22.9609146	106.8630829	-0.06156325	2.165686369	-0.01222972	7.509180069
F647	COMB1	2.25	-22.9609146	130.6432953	-0.06156325	2.165686369	0.03394264	-82.3978653
F647	COMB1	3	-22.9609146	140.9460144	-0.06156325	2.165686369	0.080114983	-185.085999
F647	COMB2	0	-21.3954792	50.28844452	-0.04595216	3.182536602	0.157651111	91.59850311
F647	COMB2	0.75	-21.3954792	57.77754974	-0.04595216	3.182536602	0.192115173	51.62015533
F647	COMB2	1.5	-21.3954792	74.00789642	-0.04595216	3.182536602	0.226579249	2.747040033
F647	COMB2	2.25	-21.3954792	90.23823547	-0.04595216	3.182536602	0.26104331	-59.3914604
F647	COMB2	3	-21.3954792	97.7273407	-0.04595216	3.182536602	0.295507371	-130.424744
F647	COMB3	0	-35.0240974	53.98326874	-1.18040717	1.940374255	-1.30206263	91.52974701
F647	COMB3	0.75	-35.0240974	61.47237778	-1.18040717	1.940374255	-0.4167591	48.78029251
F647	COMB3	1.5	-35.0240974	77.70272064	-1.18040717	1.940374255	0.468544483	-2.86393714
F647	COMB3	2.25	-35.0240974	93.93306732	-1.18040717	1.940374255	1.3538481	-67.7735519
F647	COMB3	3	-35.0240974	101.4221649	-1.18040717	1.940374255	2.239151716	-141.577942
F648	D	0	-21.0253086	39.9929924	-0.06515536	-0.02083084	-0.09554154	75.25894165
F648	D	0.75	-21.0253086	46.70360184	-0.06515536	-0.02083084	-0.04667512	43.21535873
F648	D	1.5	-21.0253086	60.89545059	-0.06515536	-0.02083084	0.002191297	3.333370209
F648	D	2.25	-21.0253086	75.0872879	-0.06515536	-0.02083084	0.051057715	-48.1276321
F648	D	3	-21.0253086	81.79790497	-0.06515536	-0.02083084	0.09992414	-107.42704
F648	L	0	-6.69503164	13.25490665	0.022469264	0.011606063	0.034206878	23.69681931
F648	L	0.75	-6.69503164	14.66115284	0.022469264	0.011606063	0.017354963	13.40409851
F648	L	1.5	-6.69503164	18.87989616	0.022469264	0.011606063	0.00050305	1.002011418
F648	L	2.25	-6.69503164	23.09863663	0.022469264	0.011606063	-0.01634886	-14.9156866
F648	L	3	-6.69503164	24.50488281	0.022469264	0.011606063	-0.03320078	-32.9427528
F648	EX	0	-0.13023059	-0.05710848	-0.38861439	1.46560216	-0.41506144	0.035542276
F648	EX	0.75	-0.13023059	-0.05710848	-0.38861439	1.46560216	-0.12360125	0.078373544
F648	EX	1.5	-0.13023059	-0.05710848	-0.38861439	1.46560216	0.167858943	0.121204816
F648	EX	2.25	-0.13023059	-0.05710848	-0.38861439	1.46560216	0.459319144	0.164036095
F648	EX	3	-0.13023059	-0.05710848	-0.38861439	1.46560216	0.750779331	0.206867352
F648	EY	0	-19.6003914	4.750215054	-0.7724973	-0.0044134	-0.83402634	0.226596087
F648	EY	0.75	-19.6003914	4.750215054	-0.7724973	-0.0044134	-0.25465453	-3.33605814
F648	EY	1.5	-19.6003914	4.750215054	-0.7724973	-0.0044134	0.324717313	-6.89871216
F648	EY	2.25	-19.6003914	4.750215054	-0.7724973	-0.0044134	0.904089153	-10.4613667
F648	EY	3	-19.6003914	4.750215054	-0.7724973	-0.0044134	1.483460903	-14.0240211
F648	COMB1	0	-35.942421	69.19944	-0.0422356	-0.00642731	-0.05991884	128.225647
F648	COMB1	0.75	-35.942421	79.50216675	-0.0422356	-0.00642731	-0.0282422	73.30499268
F648	COMB1	1.5	-35.942421	103.2823715	-0.0422356	-0.00642731	0.003434437	5.603262424
F648	COMB1	2.25	-35.942421	127.0625687	-0.0422356	-0.00642731	0.035111073	-81.6182556
F648	COMB1	3	-35.942421	137.3652954	-0.0422356	-0.00642731	0.066787712	-181.62085
F648	COMB2	0	-30.494421	47.60514832	-0.70688784	1.497291565	-0.78185034	86.59455109
F648	COMB2	0.75	-30.494421	55.09425735	-0.70688784	1.497291565	-0.25168553	48.62867737
F648	COMB2	1.5	-30.494421	71.32460022	-0.70688784	1.497291565	0.278479278	1.768024921
F648	COMB2	2.25	-30.494421	87.55493927	-0.70688784	1.497291565	0.808644116	-58.3580055
F648	COMB2	3	-30.494421	95.04404449	-0.70688784	1.497291565	1.338808894	-127.378815
F648	COMB3	0	-44.806942	51.13767624	-0.99487102	0.438814133	-1.09601545	86.73551178
F648	COMB3	0.75	-44.806942	58.62678528	-0.99487102	0.438814133	-0.34986371	46.12024689
F648	COMB3	1.5	-44.806942	74.85712433	-0.99487102	0.438814133	0.396288067	-3.38979602
F648	COMB3	2.25	-44.806942	91.08746338	-0.99487102	0.438814133	1.142439842	-66.1652145

F651	EX	2.25	0.193779573	0.401656896	-0.82605296	1.371605515	0.730338037	-0.22400376
F651	EX	3	0.193779573	0.401656896	-0.82605296	1.371605515	1.349876523	-0.52524585
F651	EY	0	-18.6780186	5.211958408	0.365250021	0.000429723	0.402964324	0.118041985
F651	EY	0.75	-18.6780186	5.211958408	0.365250021	0.000429723	0.129027352	-3.79091883
F651	EY	1.5	-18.6780186	5.211958408	0.365250021	0.000429723	-0.14490962	-7.69987965
F651	EY	2.25	-18.6780186	5.211958408	0.365250021	0.000429723	-0.41884661	-11.6088409
F651	EY	3	-18.6780186	5.211958408	0.365250021	0.000429723	-0.69278353	-15.5178013
F651	COMB1	0	-22.4793434	32.13225555	0.026973318	21.64883423	0.046856347	100.1137466
F651	COMB1	0.75	-22.4793434	53.45996094	0.026973318	21.64883423	0.026626399	69.11219788
F651	COMB1	1.5	-22.4793434	92.31513214	0.026973318	21.64883423	0.006396459	15.54211044
F651	COMB1	2.25	-22.4793434	131.1703033	0.026973318	21.64883423	-0.01383348	-69.3602219
F651	COMB1	3	-22.4793434	152.4980164	0.026973318	21.64883423	-0.0340634	-176.831085
F651	COMB2	0	-20.4838085	23.44431496	-0.50697392	15.86311817	-0.68156576	68.98036957
F651	COMB2	0.75	-20.4838085	39.20708084	-0.50697392	15.86311817	-0.30133608	46.08230209
F651	COMB2	1.5	-20.4838085	64.50842285	-0.50697392	15.86311817	0.078893624	7.785229683
F651	COMB2	2.25	-20.4838085	89.80976105	-0.50697392	15.86311817	0.459123343	-50.68013
F651	COMB2	3	-20.4838085	105.5725174	-0.50697392	15.86311817	0.839353025	-124.544495
F651	COMB3	0	-34.3516731	26.98591232	0.356243014	14.87587738	0.426972806	68.57772827
F651	COMB3	0.75	-34.3516731	42.7486763	0.356243014	14.87587738	0.159791097	43.02347183
F651	COMB3	1.5	-34.3516731	68.05001831	0.356243014	14.87587738	-0.10739061	2.070206404
F651	COMB3	2.25	-34.3516731	93.35135651	0.356243014	14.87587738	-0.37457234	-59.0513458
F651	COMB3	3	-34.3516731	109.1141205	0.356243014	14.87587738	-0.64175397	-135.571899
F652	D	0	6.403943539	-42.1525307	-0.01775168	-0.0884176	-0.04372539	-34.7593651
F652	D	1.25	6.403943539	-27.7119083	-0.01775168	-0.0884176	-0.02153579	11.0706234
F652	D	2.5	6.403943539	0.859961748	-0.01775168	-0.0884176	0.000653811	28.07822037
F652	D	3.75	6.403943539	29.43183136	-0.01775168	-0.0884176	0.022843411	8.920719147
F652	D	5	6.403943539	43.87245178	-0.01775168	-0.0884176	0.045033012	-39.0591736
F652	L	0	-4.68817759	-11.7590933	0.018483147	-0.04812466	0.047821444	-7.40836477
F652	L	1.25	-4.68817759	-7.85284424	0.018483147	-0.04812466	0.024717513	5.66289854
F652	L	2.5	-4.68817759	1.365906358	0.018483147	-0.04812466	0.001613579	9.801870346
F652	L	3.75	-4.68817759	10.58465672	0.018483147	-0.04812466	-0.02149035	2.248132706
F652	L	5	-4.68817759	14.49090672	0.018483147	-0.04812466	-0.04459429	-14.2378969
F652	EX	0	-54.4034233	7.772255898	0.035001688	0.004226161	0.083180167	20.89072227
F652	EX	1.25	-54.4034233	7.772255898	0.035001688	0.004226161	0.039428059	11.17540169
F652	EX	2.5	-54.4034233	7.772255898	0.035001688	0.004226161	-0.00432405	1.460081935
F652	EX	3.75	-54.4034233	7.772255898	0.035001688	0.004226161	-0.04807616	-8.25523853
F652	EX	5	-54.4034233	7.772255898	0.035001688	0.004226161	-0.09182828	-17.9705582
F652	EY	0	0.023797929	-0.00341327	0.495960504	0.004195888	1.403105974	-0.00824571
F652	EY	1.25	0.023797929	-0.00341327	0.495960504	0.004195888	0.783155322	-0.00397912
F652	EY	2.5	0.023797929	-0.00341327	0.495960504	0.004195888	0.1632047	0.000287467
F652	EY	3.75	0.023797929	-0.00341327	0.495960504	0.004195888	-0.45674595	0.004554054
F652	EY	5	0.023797929	-0.00341327	0.495960504	0.004195888	-1.07669652	0.008820642
F652	COMB1	0	0.183648407	-69.397583	0.008271019	-0.18310057	0.024043841	-53.564621
F652	COMB1	1.25	0.183648407	-45.81884	0.008271019	-0.18310057	0.013705072	22.34538651
F652	COMB1	2.5	0.183648407	3.217404127	0.008271019	-0.18310057	0.003366299	49.37685776
F652	COMB1	3.75	0.183648407	52.25364685	0.008271019	-0.18310057	-0.00697247	14.30187511
F652	COMB1	5	0.183648407	75.83239746	0.008271019	-0.18310057	-0.01731125	-69.6516418
F652	COMB2	0	-51.0526848	-39.9210625	0.179637223	-0.10230196	0.497221947	-17.211668
F652	COMB2	1.25	-51.0526848	-23.5279388	0.179637223	-0.10230196	0.272675395	24.97325516
F652	COMB2	2.5	-51.0526848	9.376429558	0.179637223	-0.10230196	0.048128862	34.08099747
F652	COMB2	3.75	-51.0526848	42.28079987	0.179637223	-0.10230196	-0.17641768	1.532179594
F652	COMB2	5	-51.0526848	58.67391968	0.179637223	-0.10230196	-0.40096423	-64.0938187
F652	COMB3	0	-11.8647261	-45.5195961	0.518966973	-0.10226082	1.468615174	-32.2590485
F652	COMB3	1.25	-11.8647261	-29.1264725	0.518966973	-0.10226082	0.819906354	16.92404175
F652	COMB3	2.5	-11.8647261	3.777896881	0.518966973	-0.10226082	0.171197638	33.02994919
F652	COMB3	3.75	-11.8647261	36.68226624	0.518966973	-0.10226082	-0.47751114	7.479298592
F652	COMB3	5	-11.8647261	53.07538605	0.518966973	-0.10226082	-1.12621987	-51.1485329
F653	D	0	8.295734406	-43.0163307	0.011812811	-0.15841119	0.034380727	-42.9458351
F653	D	1.25	8.295734406	-28.5757103	0.011812811	-0.15841119	0.019614711	3.963905811
F653	D	2.5	8.295734406	-0.0038392	0.011812811	-0.15841119	0.004848697	22.05125427
F653	D	3.75	8.295734406	28.56803131	0.011812811	-0.15841119	-0.00991732	3.973503828
F653	D	5	8.295734406	43.00865173	0.011812811	-0.15841119	-0.02468333	-42.9266396
F653	L	0	-5.11694717	-12.9788141	0.021792516	-0.03900574	0.053778924	-12.8198833
F653	L	1.25	-5.11694717	-9.07256317	0.021792516	-0.03900574	0.026538279	1.776030898
F653	L	2.5	-5.11694717	0.146186471	0.021792516	-0.03900574	-0.00070237	7.439652443
F653	L	3.75	-5.11694717	9.364936829	0.021792516	-0.03900574	-0.02794301	1.410564661
F653	L	5	-5.11694717	13.27118683	0.021792516	-0.03900574	-0.05518366	-13.5508146
F653	EX	0	-42.2764549	6.507173538	0.010618821	0.01263649	0.061846782	16.61285973
F653	EX	1.25	-42.2764549	6.507173538	0.010618821	0.01263649	0.048573259	8.47889328
F653	EX	2.5	-42.2764549	6.507173538	0.010618821	0.01263649	0.03529973	0.344926834
F653	EX	3.75	-42.2764549	6.507173538	0.010618821	0.01263649	0.022026205	-7.78904057
F653	EX	5	-42.2764549	6.507173538	0.010618821	0.01263649	0.008752681	-15.923008
F653	EY	0	-0.01279327	-0.00328772	1.287403226	0.072912708	3.151049137	-0.00873278
F653	EY	1.25	-0.01279327	-0.00328772	1.287403226	0.072912708	1.541794896	-0.00462314
F653	EY	2.5	-0.01279327	-0.00328772	1.287403226	0.072912708	-0.06745931	-0.00051349
F653	EY	3.75	-0.01279327	-0.00328772	1.287403226	0.072912708	-1.67671347	0.003596152
F653	EY	5	-0.01279327	-0.00328772	1.287403226	0.072912708	-3.28596759	0.007705798
F653	COMB1	0	1.767765164	-72.3856964	0.049043398	-0.25250262	0.127303153	-72.046814
F653	COMB1	1.25	1.767765164	-48.8069534	0.049043398	-0.25250262	0.065998897	7.59833622
F653	COMB1	2.5	1.767765164	0.229291305	0.049043398	-0.25250262	0.004694652	38.36494827
F653	COMB1	3.75	1.767765164	49.26553726	0.049043398	-0.25250262	-0.0566096	7.025107861
F653	COMB1	5	1.767765164	72.84428406	0.049043398	-0.25250262	-0.11791384	-73.1932678
F653	COMB2	0	-36.6614799	-42.5215836	0.435790598	-0.14257228	1.109632015	-31.9398289
F653	COMB2	1.25	-36.6614799	-26.1284637	0.435790598	-0.14257228	0.564893723	13.49574947

F653	COMB2	2.5	-36.6614799	6.775906563	0.435790598	-0.14257228	0.020155426	25.85414505
F653	COMB2	3.75	-36.6614799	39.68027878	0.435790598	-0.14257228	-0.52458286	-3.44401741
F653	COMB2	5	-36.6614799	56.07339859	0.435790598	-0.14257228	-1.06932116	-65.8193665
F653	COMB3	0	-6.23183441	-47.2091675	1.37438643	-0.09807972	3.381123304	-43.9075089
F653	COMB3	1.25	-6.23183441	-30.8160458	1.37438643	-0.09807972	1.663140178	7.38754797
F653	COMB3	2.5	-6.23183441	2.088325262	1.37438643	-0.09807972	-0.05484297	25.60542107
F653	COMB3	3.75	-6.23183441	34.99269485	1.37438643	-0.09807972	-1.77282608	2.166734934
F653	COMB3	5	-6.23183441	51.38581467	1.37438643	-0.09807972	-3.4908092	-54.3491325
F654	D	0	8.616843224	-42.9567375	0.009346492	-0.00036322	0.024690576	-41.9467316
F654	D	1.25	8.616843224	-28.5161114	0.009346492	-0.00036322	0.013007459	4.888514042
F654	D	2.5	8.616843224	0.055757411	0.009346492	-0.00036322	0.001324344	22.90136528
F654	D	3.75	8.616843224	28.62762833	0.009346492	-0.00036322	-0.01035877	4.749120235
F654	D	5	8.616843224	43.06824875	0.009346492	-0.00036322	-0.02204189	-42.2255173
F654	L	0	-4.75936031	-12.9529676	0.007883358	-0.00369735	0.018388597	-12.9589186
F654	L	1.25	-4.75936031	-9.04671764	0.007883358	-0.00369735	0.008534401	1.60468781
F654	L	2.5	-4.75936031	0.172032237	0.007883358	-0.00369735	-0.0013198	7.236001968
F654	L	3.75	-4.75936031	9.390782356	0.007883358	-0.00369735	-0.01117399	1.174607158
F654	L	5	-4.75936031	13.29703331	0.007883358	-0.00369735	-0.02102819	-13.8190794
F654	EX	0	-27.6625023	5.982657433	0.275763839	-0.02092093	0.689411223	14.96278667
F654	EX	1.25	-27.6625023	5.982657433	0.275763839	-0.02092093	0.344706416	7.484465599
F654	EX	2.5	-27.6625023	5.982657433	0.275763839	-0.02092093	1.59454E-06	0.006143595
F654	EX	3.75	-27.6625023	5.982657433	0.275763839	-0.02092093	-0.3447032	-7.47217846
F654	EX	5	-27.6625023	5.982657433	0.275763839	-0.02092093	-0.689408	-14.9504995
F654	EY	0	-0.06697935	-1.315E-07	-1.0137E-05	8.26822E-07	-0.35514656	-0.00094353
F654	EY	1.25	-0.06697935	-1.315E-07	-1.0137E-05	8.26822E-07	-0.35513392	-0.00094336
F654	EY	2.5	-0.06697935	-1.315E-07	-1.0137E-05	8.26822E-07	-0.35512125	-0.0009432
F654	EY	3.75	-0.06697935	-1.315E-07	-1.0137E-05	8.26822E-07	-0.35510856	-0.00094303
F654	EY	5	-0.06697935	-1.315E-07	-1.0137E-05	8.26822E-07	-0.35509589	-0.00094287
F654	COMB1	0	2.725235224	-72.2728348	0.023829162	-0.00635163	0.059050448	-71.0703506
F654	COMB1	1.25	2.725235224	-48.6940842	0.023829162	-0.00635163	0.029263992	8.433716774
F654	COMB1	2.5	2.725235224	0.342160463	0.023829162	-0.00635163	-0.00052246	39.05924225
F654	COMB1	3.75	2.725235224	49.37840652	0.023829162	-0.00635163	-0.03030892	7.578315735
F654	COMB1	5	2.725235224	72.95715332	0.023829162	-0.00635163	-0.06009537	-72.7811508
F654	COMB2	0	-21.1033001	-42.9927101	0.297709465	-0.02319896	0.63338697	-32.6399422
F654	COMB2	1.25	-21.1033001	-26.5995846	0.297709465	-0.02319896	0.261250138	13.38454056
F654	COMB2	2.5	-21.1033001	6.304785728	0.297709465	-0.02319896	-0.11088672	26.3318367
F654	COMB2	3.75	-21.1033001	39.20915604	0.297709465	-0.02319896	-0.48302352	-2.37742424
F654	COMB2	5	-21.1033001	55.60227966	0.297709465	-0.02319896	-0.85516036	-64.1638718
F654	COMB3	0	-1.23552954	-47.3002205	0.099152043	-0.00813528	-0.12402186	-43.4138412
F654	COMB3	1.25	-1.23552954	-30.9070969	0.099152043	-0.00813528	-0.24796192	7.99503231
F654	COMB3	2.5	-1.23552954	1.997272372	0.099152043	-0.00813528	-0.37190199	26.32671928
F654	COMB3	3.75	-1.23552954	34.90164185	0.099152043	-0.00813528	-0.49584201	3.001851082
F654	COMB3	5	-1.23552954	51.29476547	0.099152043	-0.00813528	-0.61978209	-53.4001999
F655	D	0	8.758422852	-42.6976013	0.009871074	0.154163435	0.031074531	-42.372673
F655	D	1.25	8.758422852	-28.2569752	0.009871074	0.154163435	0.018735688	4.138651371
F655	D	2.5	8.758422852	0.314893872	0.009871074	0.154163435	0.006396846	21.82758331
F655	D	3.75	8.758422852	28.88676453	0.009871074	0.154163435	-0.005942	3.351416588
F655	D	5	8.758422852	43.32738495	0.009871074	0.154163435	-0.01828084	-43.9471436
F655	L	0	-5.03417826	-13.498291	0.006851429	0.012908353	0.017429939	-14.2064934
F655	L	1.25	-5.03417826	-9.59204102	0.006851429	0.012908353	0.008865653	1.038766861
F655	L	2.5	-5.03417826	-0.37329093	0.006851429	0.012908353	0.000301367	7.351735592
F655	L	3.75	-5.03417826	8.845458984	0.006851429	0.012908353	-0.00826292	1.971994281
F655	L	5	-5.03417826	12.75170898	0.006851429	0.012908353	-0.01682721	-12.3400383
F655	EX	0	-13.9362974	6.429637909	0.00419775	0.012386437	-0.02383095	15.78235722
F655	EX	1.25	-13.9362974	6.429637909	0.00419775	0.012386437	-0.02907814	7.745309353
F655	EX	2.5	-13.9362974	6.429637909	0.00419775	0.012386437	-0.03432532	-0.29173818
F655	EX	3.75	-13.9362974	6.429637909	0.00419775	0.012386437	-0.03957251	-8.3287859
F655	EX	5	-13.9362974	6.429637909	0.00419775	0.012386437	-0.0448197	-16.3658333
F655	EY	0	-0.01279261	0.003287525	-1.28740072	-0.07291339	-3.28595781	0.007705349
F655	EY	1.25	-0.01279261	0.003287525	-1.28740072	-0.07291339	-1.67670679	0.003595944
F655	EY	2.5	-0.01279261	0.003287525	-1.28740072	-0.07291339	-0.06745582	-0.00051346
F655	EY	3.75	-0.01279261	0.003287525	-1.28740072	-0.07291339	1.541795254	-0.00462287
F655	EY	5	-0.01279261	0.003287525	-1.28740072	-0.07291339	3.151046276	-0.00873228
F655	COMB1	0	2.455422401	-72.8343887	0.022807574	0.205649495	0.065177336	-73.5775986
F655	COMB1	1.25	2.455422401	-49.2556381	0.022807574	0.205649495	0.036667868	6.628408432
F655	COMB1	2.5	2.455422401	-0.21939282	0.022807574	0.205649495	0.008158402	37.9558754
F655	COMB1	3.75	2.455422401	48.81685257	0.022807574	0.205649495	-0.02035107	7.17689085
F655	COMB1	5	2.455422401	72.39559937	0.022807574	0.205649495	-0.04886054	-72.4806366
F655	COMB2	0	-6.81751919	-42.42873	-0.38866374	0.155789986	-1.02162313	-32.6291847
F655	COMB2	1.25	-6.81751919	-26.0356064	-0.38866374	0.155789986	-0.53579336	12.69032288
F655	COMB2	2.5	-6.81751919	6.868762493	-0.38866374	0.155789986	-0.04996368	24.93264771
F655	COMB2	3.75	-6.81751919	39.77313232	-0.38866374	0.155789986	0.435866028	-4.4815836
F655	COMB2	5	-6.81751919	56.16625595	-0.38866374	0.155789986	0.921695709	-66.9729996
F655	COMB3	0	3.207211971	-47.0556564	-1.33792567	0.093280412	-3.41964388	-43.9868202
F655	COMB3	1.25	3.207211971	-30.662529	-1.33792567	0.093280412	-1.74723661	7.116343498
F655	COMB3	2.5	3.207211971	2.241839647	-1.33792567	0.093280412	-0.07482947	25.14232254
F655	COMB3	3.75	3.207211971	35.14620972	-1.33792567	0.093280412	1.597577691	1.511744022
F655	COMB3	5	3.207211971	51.53933334	-1.33792567	0.093280412	3.269984961	-55.1960182
F656	D	0	6.741537571	-44.1973	0.052076336	0.052215137	0.128606915	-39.9997444
F656	D	1.25	6.741537571	-29.7566776	0.052076336	0.052215137	0.063511498	8.386205673
F656	D	2.5	6.741537571	-1.18480694	0.052076336	0.052215137	-0.00158392	27.94976425
F656	D	3.75	6.741537571	27.38706207	0.052076336	0.052215137	-0.06667934	11.34822369
F656	D	5	6.741537571	41.82768631	0.052076336	0.052215137	-0.13177477	-34.0757103
F656	L	0	-4.71437025	-14.4163761	0.007834618	0.031792901	0.017986255	-13.9776001

F656	L	1.25	-4.71437025	-10.5101271	0.007834618	0.031792901	0.008192983	2.415267229
F656	L	2.5	-4.71437025	-1.29137647	0.007834618	0.031792901	-0.00160029	9.875842094
F656	L	3.75	-4.71437025	7.927373886	0.007834618	0.031792901	-0.01139356	5.643708229
F656	L	5	-4.71437025	11.83362389	0.007834618	0.031792901	-0.02118683	-7.5207181
F656	EX	0	-4.38739824	7.651036263	0.028684264	0.004208762	0.069958977	17.66324234
F656	EX	1.25	-4.38739824	7.651036263	0.028684264	0.004208762	0.034103647	8.099446297
F656	EX	2.5	-4.38739824	7.651036263	0.028684264	0.004208762	-0.00175168	-1.46434939
F656	EX	3.75	-4.38739824	7.651036263	0.028684264	0.004208762	-0.03760701	-11.0281448
F656	EX	5	-4.38739824	7.651036263	0.028684264	0.004208762	-0.07346234	-20.5919399
F656	EY	0	0.023798047	0.003412998	-0.49595681	-0.00419624	-1.07668757	0.008820004
F656	EY	1.25	0.023798047	0.003412998	-0.49595681	-0.00419624	-0.4567416	0.004553756
F656	EY	2.5	0.023798047	0.003412998	-0.49595681	-0.00419624	0.163204432	0.000287509
F656	EY	3.75	0.023798047	0.003412998	-0.49595681	-0.00419624	0.783150494	-0.00397874
F656	EY	5	0.023798047	0.003412998	-0.49595681	-0.00419624	1.403096557	-0.00824499
F656	COMB1	0	0.546852827	-76.1029587	0.075026989	0.113526806	0.183106303	-70.3638535
F656	COMB1	1.25	0.546852827	-52.5242157	0.075026989	0.113526806	0.089322567	13.92787457
F656	COMB1	2.5	0.546852827	-3.48797059	0.075026989	0.113526806	-0.00446117	49.34106445
F656	COMB1	3.75	0.546852827	45.54827499	0.075026989	0.113526806	-0.09824491	22.64780045
F656	COMB1	5	0.546852827	69.12702179	0.075026989	0.113526806	-0.19202866	-52.9240036
F656	COMB2	0	1.060126901	-43.0284271	-0.06939013	0.067874908	-0.12604612	-28.1184406
F656	COMB2	1.25	1.060126901	-26.6353035	-0.06939013	0.067874908	-0.03930846	17.9506855
F656	COMB2	2.5	1.060126901	6.269066811	-0.06939013	0.067874908	0.047429193	30.94263077
F656	COMB2	3.75	1.060126901	39.17343521	-0.06939013	0.067874908	0.134166867	2.27801919
F656	COMB2	5	1.060126901	55.56656265	-0.06939013	0.067874908	0.220904529	-59.4637794
F656	COMB3	0	4.236545086	-48.5346642	-0.45457107	0.06176037	-0.96778196	-40.8294907
F656	COMB3	1.25	4.236545086	-32.1415405	-0.45457107	0.06176037	-0.39956817	12.12243176
F656	COMB3	2.5	4.236545086	0.762829185	-0.45457107	0.06176037	0.168645665	31.99717522
F656	COMB3	3.75	4.236545086	33.66719818	-0.45457107	0.06176037	0.7368595	10.21535969
F656	COMB3	5	4.236545086	50.06032181	-0.45457107	0.06176037	1.30507338	-44.6436424
F657	D	0	-12.1129379	-81.1395035	0.310647488	12.14386845	0.466338992	-91.8527908
F657	D	0.75	-12.1129379	-68.7991104	0.310647488	12.14386845	0.233351901	-35.391655
F657	D	1.5	-12.1129379	-52.7180672	0.310647488	12.14386845	0.000364768	10.41137218
F657	D	2.25	-12.1129379	-36.6370277	0.310647488	12.14386845	-0.23262237	43.68595886
F657	D	3	-12.1129379	-24.2966366	0.310647488	12.14386845	-0.46560946	66.30243683
F657	L	0	-2.51382399	-12.7946196	-0.19619535	4.082350731	-0.32011265	-16.3134441
F657	L	0.75	-2.51382399	-12.0914898	-0.19619535	4.082350731	-0.17296518	-6.89320135
F657	L	1.5	-2.51382399	-9.98210144	-0.19619535	4.082350731	-0.02581773	1.472340941
F657	L	2.25	-2.51382399	-7.87271261	-0.19619535	4.082350731	0.12132974	8.080047607
F657	L	3	-2.51382399	-7.1695838	-0.19619535	4.082350731	0.268477201	13.63305378
F657	EX	0	0.392762125	0.590930223	-1.38970661	-1.35415661	-2.07526159	0.961956382
F657	EX	0.75	0.392762125	0.590930223	-1.38970661	-1.35415661	-1.03297472	0.518755853
F657	EX	1.5	0.392762125	0.590930223	-1.38970661	-1.35415661	0.009311995	0.075555317
F657	EX	2.25	0.392762125	0.590930223	-1.38970661	-1.35415661	1.051598668	-0.3676452
F657	EX	3	0.392762125	0.590930223	-1.38970661	-1.35415661	2.09388566	-0.81084573
F657	EY	0	-7.57114601	6.174655437	-0.3805536	0.00329173	-0.72425669	16.80430794
F657	EY	0.75	-7.57114601	6.174655437	-0.3805536	0.00329173	-0.43883964	12.17328739
F657	EY	1.5	-7.57114601	6.174655437	-0.3805536	0.00329173	-0.15342259	7.542265415
F657	EY	2.25	-7.57114601	6.174655437	-0.3805536	0.00329173	0.131994471	2.911243439
F657	EY	3	-7.57114601	6.174655437	-0.3805536	0.00329173	0.417411506	-1.71977806
F657	COMB1	0	-18.5576439	-117.838799	0.058864422	21.10440445	0.047426552	-136.32486
F657	COMB1	0.75	-18.5576439	-101.905319	0.058864422	21.10440445	0.003277971	-53.4991112
F657	COMB1	1.5	-18.5576439	-79.2330399	0.058864422	21.10440445	-0.04087064	14.84939194
F657	COMB1	2.25	-18.5576439	-56.5607758	0.058864422	21.10440445	-0.08501925	65.35122681
F657	COMB1	3	-18.5576439	-40.6272964	0.058864422	21.10440445	-0.12916784	101.3758163
F657	COMB2	0	-15.488842	-86.6701584	-1.29384243	12.63648701	-1.98721611	-95.2951813
F657	COMB2	0.75	-15.488842	-73.4912567	-1.29384243	12.63648701	-1.01682794	-34.9610977
F657	COMB2	1.5	-15.488842	-55.9417038	-1.29384243	12.63648701	-0.04643978	13.84974098
F657	COMB2	2.25	-15.488842	-38.3921547	-1.29384243	12.63648701	0.923948288	48.95199966
F657	COMB2	3	-15.488842	-25.2132568	-1.29384243	12.63648701	1.894336581	72.53102112
F657	COMB3	0	-21.336422	-82.557251	-0.57296056	13.61389923	-1.02535641	-83.6366272
F657	COMB3	0.75	-21.336422	-69.3783569	-0.57296056	13.61389923	-0.59563321	-26.3872375
F657	COMB3	1.5	-21.336422	-51.8288002	-0.57296056	13.61389923	-0.16591002	19.33890724
F657	COMB3	2.25	-21.336422	-34.2792549	-0.57296056	13.61389923	0.263813168	51.3564682
F657	COMB3	3	-21.336422	-21.1003551	-0.57296056	13.61389923	0.69353646	71.85079193
F658	D	0	-15.0230322	-91.0863495	0.203568965	-0.63281453	0.303163081	-115.329178
F658	D	0.75	-15.0230322	-84.3756866	0.203568965	-0.63281453	0.150485381	-49.0629082
F658	D	1.5	-15.0230322	-70.1837158	0.203568965	-0.63281453	-0.00219233	9.364827156
F658	D	2.25	-15.0230322	-55.9917526	0.203568965	-0.63281453	-0.15487003	56.21334839
F658	D	3	-15.0230322	-49.2810822	0.203568965	-0.63281453	-0.30754775	95.22332764
F658	L	0	-5.13606167	-27.4408188	-0.14213976	-0.36535484	-0.23118521	-35.4468765
F658	L	0.75	-5.13606167	-26.0345592	-0.14213976	-0.36535484	-0.12457971	-15.2176952
F658	L	1.5	-5.13606167	-21.8157825	-0.14213976	-0.36535484	-0.0179742	2.902082682
F658	L	2.25	-5.13606167	-17.5970058	-0.14213976	-0.36535484	0.08863131	17.50618935
F658	L	3	-5.13606167	-16.1907463	-0.14213976	-0.36535484	0.195236817	30.00089455
F658	EX	0	-0.24421157	-0.16717909	-0.52751166	-1.70053911	-0.70030588	-0.23418273
F658	EX	0.75	-0.24421157	-0.16717909	-0.52751166	-1.70053911	-0.30466956	-0.10879761
F658	EX	1.5	-0.24421157	-0.16717909	-0.52751166	-1.70053911	0.090966769	0.016587509
F658	EX	2.25	-0.24421157	-0.16717909	-0.52751166	-1.70053911	0.486603081	0.141972631
F658	EX	3	-0.24421157	-0.16717909	-0.52751166	-1.70053911	0.882239401	0.267357767
F658	EY	0	-7.79082108	6.179685593	-1.05972385	-0.01103985	-2.05663586	16.79068756
F658	EY	0.75	-7.79082108	6.179685593	-1.05972385	-0.01103985	-1.26183772	12.15589333
F658	EY	1.5	-7.79082108	6.179685593	-1.05972385	-0.01103985	-0.46703976	7.521099091
F658	EY	2.25	-7.79082108	6.179685593	-1.05972385	-0.01103985	0.327758312	2.886304379
F658	EY	3	-7.79082108	6.179685593	-1.05972385	-0.01103985	1.122556329	-1.74848986

F660	COMB3	3	-35.2797356	-50.5583687	0.803838432	-0.59348679	-0.83189744	107.2288208
F661	D	0	-15.1601515	-91.3105698	-0.2574445	0.754908442	-0.40776309	-115.631386
F661	D	0.75	-15.1601515	-84.5998993	-0.2574445	0.754908442	-0.21467847	-49.1969452
F661	D	1.5	-15.1601515	-70.4079361	-0.2574445	0.754908442	-0.02159384	9.398955345
F661	D	2.25	-15.1601515	-56.2159729	-0.2574445	0.754908442	0.171490788	56.4156456
F661	D	3	-15.1601515	-49.5053062	-0.2574445	0.754908442	0.364575416	95.59380341
F661	L	0	-6.84066629	-38.2685471	0.089123331	0.518444359	0.127671361	-46.9487114
F661	L	0.75	-6.84066629	-35.5966568	0.089123331	0.518444359	0.060828425	-18.9150887
F661	L	1.5	-6.84066629	-27.5809803	0.089123331	0.518444359	-0.0060145	5.110666275
F661	L	2.25	-6.84066629	-19.5653019	0.089123331	0.518444359	-0.07285743	22.45664787
F661	L	3	-6.84066629	-16.8934116	0.089123331	0.518444359	-0.13970037	35.79476929
F661	EX	0	-0.02777514	0.164020702	0.765154064	-1.67190385	1.247434974	0.230158105
F661	EX	0.75	-0.02777514	0.164020702	0.765154064	-1.67190385	0.673565686	0.107141785
F661	EX	1.5	-0.02777514	0.164020702	0.765154064	-1.67190385	0.09969642	-0.01587453
F661	EX	2.25	-0.02777514	0.164020702	0.765154064	-1.67190385	-0.47417286	-0.13889085
F661	EX	3	-0.02777514	0.164020702	0.765154064	-1.67190385	-1.04804218	-0.26190716
F661	EY	0	-7.79082012	6.179684162	1.059720874	0.011039843	2.056628942	16.79068184
F661	EY	0.75	-7.79082012	6.179684162	1.059720874	0.011039843	1.261833072	12.15589046
F661	EY	1.5	-7.79082012	6.179684162	1.059720874	0.011039843	0.467037231	7.52109623
F661	EY	2.25	-7.79082012	6.179684162	1.059720874	0.011039843	-0.32775858	2.886303663
F661	EY	3	-7.79082012	6.179684162	1.059720874	0.011039843	-1.12255442	-1.7484895
F661	COMB1	0	-29.137249	-170.802368	-0.16633607	1.735401154	-0.28504154	-213.875595
F661	COMB1	0.75	-29.137249	-158.474533	-0.16633607	1.735401154	-0.16028868	-89.3004761
F661	COMB1	1.5	-29.137249	-128.619095	-0.16633607	1.735401154	-0.03553581	19.45581245
F661	COMB1	2.25	-29.137249	-98.7636566	-0.16633607	1.735401154	0.089217044	103.6294098
F661	COMB1	3	-29.137249	-86.4358215	-0.16633607	1.735401154	0.213969901	171.9841919
F661	COMB2	0	-20.5558243	-105.814331	0.883503675	-0.77097911	1.550998449	-130.674515
F661	COMB2	0.75	-20.5558243	-97.9264755	0.883503675	-0.77097911	0.888366461	-53.6750488
F661	COMB2	1.5	-20.5558243	-80.4999847	0.883503675	-0.77097911	0.225734428	13.83147812
F661	COMB2	2.25	-20.5558243	-63.0734825	0.883503675	-0.77097911	-0.43689764	67.07570648
F661	COMB2	3	-20.5558243	-55.1856346	0.883503675	-0.77097911	-1.09952974	110.8269958
F661	COMB3	0	-26.2620792	-101.390358	1.111487627	0.440905958	2.164467573	-118.499077
F661	COMB3	0.75	-26.2620792	-93.5025024	1.111487627	0.440905958	1.330846429	-44.8176117
F661	COMB3	1.5	-26.2620792	-76.0760117	1.111487627	0.440905958	0.497225374	19.37091446
F661	COMB3	2.25	-26.2620792	-58.6495094	1.111487627	0.440905958	-0.33639571	69.29714203
F661	COMB3	3	-26.2620792	-50.7616615	1.111487627	0.440905958	-1.17001688	109.7304306
F662	D	0	-14.5140715	-97.0926514	-0.35417956	-11.9368954	-0.55493194	-108.796547
F662	D	0.75	-14.5140715	-82.8819427	-0.35417956	-11.9368954	-0.28929555	-40.838047
F662	D	1.5	-14.5140715	-61.18993	-0.35417956	-11.9368954	-0.02365919	13.65683651
F662	D	2.25	-14.5140715	-39.4979172	-0.35417956	-11.9368954	0.241977185	50.94743729
F662	D	3	-14.5140715	-25.2872009	-0.35417956	-11.9368954	0.50761354	74.77442932
F662	L	0	-5.1352191	-29.7396049	0.162049577	-4.04919624	0.24860552	-34.353672
F662	L	0.75	-5.1352191	-27.0677128	0.162049577	-4.04919624	0.127067551	-12.7168026
F662	L	1.5	-5.1352191	-19.0520363	0.162049577	-4.04919624	0.005529589	4.912204266
F662	L	2.25	-5.1352191	-11.0363598	0.162049577	-4.04919624	-0.11600838	15.86143589
F662	L	3	-5.1352191	-8.36446762	0.162049577	-4.04919624	-0.23754634	22.80280685
F662	EX	0	0.019274941	-0.58093566	0.777071297	-1.33688998	1.288282156	-0.94490564
F662	EX	0.75	0.019274941	-0.58093566	0.777071297	-1.33688998	0.705474973	-0.50920117
F662	EX	1.5	0.019274941	-0.58093566	0.777071297	-1.33688998	0.122667752	-0.07349662
F662	EX	2.25	0.019274941	-0.58093566	0.777071297	-1.33688998	-0.46013945	0.362207919
F662	EX	3	0.019274941	-0.58093566	0.777071297	-1.33688998	-1.0429467	0.797912419
F662	EY	0	-7.57114315	6.174657822	0.3805511	-0.00329175	0.72425127	16.80431366
F662	EY	0.75	-7.57114315	6.174657822	0.3805511	-0.00329175	0.438836098	12.17329025
F662	EY	1.5	-7.57114315	6.174657822	0.3805511	-0.00329175	0.15342091	7.542267323
F662	EY	2.25	-7.57114315	6.174657822	0.3805511	-0.00329175	-0.13199428	2.911244392
F662	EY	3	-7.57114315	6.174657822	0.3805511	-0.00329175	-0.41740945	-1.71977866
F662	COMB1	0	-25.6332359	-164.094559	-0.16573614	-20.80299	-0.26814947	-185.521729
F662	COMB1	0.75	-25.6332359	-142.766678	-0.16573614	-20.80299	-0.1438466	-69.3525391
F662	COMB1	1.5	-25.6332359	-103.911171	-0.16573614	-20.80299	-0.01954369	24.24773026
F662	COMB1	2.25	-25.6332359	-65.0556793	-0.16573614	-20.80299	0.104759209	86.51522827
F662	COMB1	3	-25.6332359	-43.727787	-0.16573614	-20.80299	0.22906214	126.2137985
F662	COMB2	0	-19.2223301	-109.971512	0.603299439	-15.1939554	1.05714345	-120.742401
F662	COMB2	0.75	-19.2223301	-94.2086258	0.603299439	-15.1939554	0.604665875	-43.5781784
F662	COMB2	1.5	-19.2223301	-68.9070663	0.603299439	-15.1939554	0.152188376	18.18676758
F662	COMB2	2.25	-19.2223301	-43.6055183	0.603299439	-15.1939554	-0.30028912	59.78308868
F662	COMB2	3	-19.2223301	-27.8426189	0.603299439	-15.1939554	-0.75276661	85.98014069
F662	COMB3	0	-24.8009968	-105.01487	0.32351321	-14.2338142	0.661904931	-107.710892
F662	COMB3	0.75	-24.8009968	-89.251976	0.32351321	-14.2338142	0.419268429	-34.2641869
F662	COMB3	1.5	-24.8009968	-63.9504242	0.32351321	-14.2338142	0.176631957	23.78325272
F662	COMB3	2.25	-24.8009968	-38.6488686	0.32351321	-14.2338142	-0.06600452	61.6620636
F662	COMB3	3	-24.8009968	-22.8859711	0.32351321	-14.2338142	-0.30864096	84.14160919
F663	D	0	0.552064538	-36.1628876	-0.00449101	-0.03322029	-0.01145959	-26.1464348
F663	D	1.25	0.552064538	-23.5222664	-0.00449101	-0.03322029	-0.00584582	13.32150173
F663	D	2.5	0.552064538	3.249604225	-0.00449101	-0.03322029	-0.00023206	26.21704483
F663	D	3.75	0.552064538	30.02147484	-0.00449101	-0.03322029	0.005381704	5.197490692
F663	D	5	0.552064538	42.66209793	-0.00449101	-0.03322029	0.010995468	-42.394455
F663	L	0	-0.29786521	-11.9945221	0.018804932	0.000435692	0.049120381	-8.61617279
F663	L	1.25	-0.29786521	-8.08827209	0.018804932	0.000435692	0.025614215	4.749374866
F663	L	2.5	-0.29786521	1.130478501	0.018804932	0.000435692	0.002108048	9.182631493
F663	L	3.75	-0.29786521	10.34922791	0.018804932	0.000435692	-0.02139812	1.923178911
F663	L	5	-0.29786521	14.25547886	0.018804932	0.000435692	-0.04490428	-14.2685661
F663	EX	0	-2.48256183	0.946550667	-0.00863371	-0.00115786	-0.0077875	2.820083857
F663	EX	1.25	-2.48256183	0.946550667	-0.00863371	-0.00115786	0.003004643	1.636895299
F663	EX	2.5	-2.48256183	0.946550667	-0.00863371	-0.00115786	0.013796787	0.45370689

F663	EX	3.75	-2.48256183	0.946550667	-0.00863371	-0.00115786	0.024588931	-0.72948152
F663	EX	5	-2.48256183	0.946550667	-0.00863371	-0.00115786	0.035381071	-1.91267002
F663	EY	0	0.073459163	-0.0007143	0.332066655	0.000457993	0.833733857	0.002141086
F663	EY	1.25	0.073459163	-0.0007143	0.332066655	0.000457993	0.418650538	0.003033959
F663	EY	2.5	0.073459163	-0.0007143	0.332066655	0.000457993	0.00356721	0.003926833
F663	EY	3.75	0.073459163	-0.0007143	0.332066655	0.000457993	-0.41151613	0.004819706
F663	EY	5	0.073459163	-0.0007143	0.332066655	0.000457993	-0.82659948	0.005712579
F663	COMB1	0	0.185893133	-62.5867004	0.02469868	-0.03916724	0.064841107	-45.1615982
F663	COMB1	1.25	0.185893133	-41.1679535	0.02469868	-0.03916724	0.033967756	23.58480263
F663	COMB1	2.5	0.185893133	5.708290577	0.02469868	-0.03916724	0.003094405	46.15266418
F663	COMB1	3.75	0.185893133	52.58453369	0.02469868	-0.03916724	-0.02777894	9.314074516
F663	COMB1	5	0.185893133	74.00328064	0.02469868	-0.03916724	-0.0586523	-73.7030487
F663	COMB2	0	-2.06047177	-40.7698517	0.09687309	-0.03579818	0.258006454	-27.2483883
F663	COMB2	1.25	-2.06047177	-26.2667313	0.09687309	-0.03579818	0.136915088	17.17877197
F663	COMB2	2.5	-2.06047177	4.747640133	0.09687309	-0.03579818	0.015823718	30.8912487
F663	COMB2	3.75	-2.06047177	35.76200867	0.09687309	-0.03579818	-0.10526765	5.309671402
F663	COMB2	5	-2.06047177	50.2651329	0.09687309	-0.03579818	-0.22635902	-50.9865875
F663	COMB3	0	-0.21903464	-41.4518929	0.347158372	-0.0346279	0.876407802	-29.2772751
F663	COMB3	1.25	-0.21903464	-26.9487724	0.347158372	-0.0346279	0.442459911	16.00243759
F663	COMB3	2.5	-0.21903464	4.065598488	0.347158372	-0.0346279	0.008511931	30.56746674
F663	COMB3	3.75	-0.21903464	35.0799675	0.347158372	-0.0346279	-0.42543605	5.838440418
F663	COMB3	5	-0.21903464	49.58309174	0.347158372	-0.0346279	-0.859384	-49.6052666
F664	D	0	0.959699631	-39.7274551	0.013516821	-0.05526203	0.034256369	-40.1809273
F664	D	1.25	0.959699631	-27.086832	0.013516821	-0.05526203	0.017360341	3.742718458
F664	D	2.5	0.959699631	-0.31496251	0.013516821	-0.05526203	0.000464314	21.09397125
F664	D	3.75	0.959699631	26.45690727	0.013516821	-0.05526203	-0.01643171	4.530124664
F664	D	5	0.959699631	39.09753036	0.013516821	-0.05526203	-0.03332774	-38.6061134
F664	L	0	-0.48511845	-13.2227602	0.017242013	-0.01054211	0.043649159	-13.572196
F664	L	1.25	-0.48511845	-9.31650925	0.017242013	-0.01054211	0.022096643	1.328650713
F664	L	2.5	-0.48511845	-0.09775969	0.017242013	-0.01054211	0.000544127	7.297204971
F664	L	3.75	-0.48511845	9.120990753	0.017242013	-0.01054211	-0.02100839	1.573049784
F664	L	5	-0.48511845	13.02724075	0.017242013	-0.01054211	-0.04256091	-13.0833969
F664	EX	0	-3.63844991	0.625018954	-0.021361	-0.00255223	-0.05288133	1.580994725
F664	EX	1.25	-3.63844991	0.625018954	-0.021361	-0.00255223	-0.02618009	0.799721003
F664	EX	2.5	-3.63844991	0.625018954	-0.021361	-0.00255223	0.000521156	0.018447254
F664	EX	3.75	-3.63844991	0.625018954	-0.021361	-0.00255223	0.027222401	-0.7628265
F664	EX	5	-3.63844991	0.625018954	-0.021361	-0.00255223	0.053923644	-1.54410017
F664	EY	0	0.431304783	0.010994135	0.68436271	-0.00293832	1.705136061	0.028094847
F664	EY	1.25	0.431304783	0.010994135	0.68436271	-0.00293832	0.849682748	0.014352178
F664	EY	2.5	0.431304783	0.010994135	0.68436271	-0.00293832	-0.00577065	0.000609507
F664	EY	3.75	0.431304783	0.010994135	0.68436271	-0.00293832	-0.861224	-0.01313316
F664	EY	5	0.431304783	0.010994135	0.68436271	-0.00293832	-1.71667731	-0.02687583
F664	COMB1	0	0.375450045	-68.829361	0.043807406	-0.08318182	0.11094629	-69.9326248
F664	COMB1	1.25	0.375450045	-47.410614	0.043807406	-0.08318182	0.056187037	6.6171031
F664	COMB1	2.5	0.375450045	-0.53437054	0.043807406	-0.08318182	0.001427779	36.98829269
F664	COMB1	3.75	0.375450045	46.34187317	0.043807406	-0.08318182	-0.05333148	7.953029156
F664	COMB1	5	0.375450045	67.76062012	0.043807406	-0.08318182	-0.10809074	-67.2607727
F664	COMB2	0	-2.77506256	-45.2286415	0.213089511	-0.06491303	0.532104373	-44.820034
F664	COMB2	1.25	-2.77506256	-30.7255173	0.213089511	-0.06491303	0.265742481	5.18061161
F664	COMB2	2.5	-2.77506256	0.288852841	0.213089511	-0.06491303	-0.00061943	24.46657372
F664	COMB2	3.75	-2.77506256	31.30322075	0.213089511	-0.06491303	-0.26698133	4.458479404
F664	COMB2	5	-2.77506256	45.80634308	0.213089511	-0.06491303	-0.5333432	-46.2643013
F664	COMB3	0	0.161630571	-45.6705742	0.731476009	-0.06523509	1.823453903	-45.9377022
F664	COMB3	1.25	0.161630571	-31.16745	0.731476009	-0.06523509	0.909108937	4.615361214
F664	COMB3	2.5	0.161630571	-0.15308012	0.731476009	-0.06523509	-0.00523609	24.45373917
F664	COMB3	3.75	0.161630571	30.86128807	0.731476009	-0.06523509	-0.91958112	4.998061657
F664	COMB3	5	0.161630571	45.3644104	0.731476009	-0.06523509	-1.83392608	-45.1723022
F665	D	0	1.105202556	-39.4148712	0.008142108	-0.00010036	0.020707384	-38.9229202
F665	D	1.25	1.105202556	-26.77425	0.008142108	-0.00010036	0.010529747	4.609999657
F665	D	2.5	1.105202556	-0.00238043	0.008142108	-0.00010036	0.000352112	21.57052422
F665	D	3.75	1.105202556	26.76948929	0.008142108	-0.00010036	-0.00982552	4.615950584
F665	D	5	1.105202556	39.41011429	0.008142108	-0.00010036	-0.02000316	-38.9110146
F665	L	0	-0.54052401	-13.0691071	0.008055966	-7.7542E-05	0.020686073	-13.1356831
F665	L	1.25	-0.54052401	-9.16285801	0.008055966	-7.7542E-05	0.010616114	1.573097706
F665	L	2.5	-0.54052401	0.05589265	0.008055966	-7.7542E-05	0.000546156	7.349586487
F665	L	3.75	-0.54052401	9.274642944	0.008055966	-7.7542E-05	-0.0095238	1.433366179
F665	L	5	-0.54052401	13.18089294	0.008055966	-7.7542E-05	-0.01959376	-13.4151459
F665	EX	0	-3.4313848	0.578995824	0.095021017	0.004982048	0.239011288	1.447336197
F665	EX	1.25	-3.4313848	0.578995824	0.095021017	0.004982048	0.120235011	0.723591387
F665	EX	2.5	-3.4313848	0.578995824	0.095021017	0.004982048	0.001458731	-0.00015348
F665	EX	3.75	-3.4313848	0.578995824	0.095021017	0.004982048	-0.11731753	-0.72389835
F665	EX	5	-3.4313848	0.578995824	0.095021017	0.004982048	-0.2360938	-1.44764316
F665	EY	0	0.746218383	-9.4001E-08	-5.0337E-06	-1.503E-07	-0.0006188	-0.00764619
F665	EY	1.25	0.746218383	-9.4001E-08	-5.0337E-06	-1.503E-07	-0.00061251	-0.00764608
F665	EY	2.5	0.746218383	-9.4001E-08	-5.0337E-06	-1.503E-07	-0.00060622	-0.00764596
F665	EY	3.75	0.746218383	-9.4001E-08	-5.0337E-06	-1.503E-07	-0.00059993	-0.00764584
F665	EY	5	0.746218383	-9.4001E-08	-5.0337E-06	-1.503E-07	-0.00059364	-0.00764572
F665	COMB1	0	0.461404622	-68.2084198	0.022660075	-0.00024449	0.057946578	-67.7245941
F665	COMB1	1.25	0.461404622	-46.7896729	0.022660075	-0.00024449	0.02962148	8.048955917
F665	COMB1	2.5	0.461404622	0.086571731	0.022660075	-0.00024449	0.001296385	37.64396667
F665	COMB1	3.75	0.461404622	46.96281433	0.022660075	-0.00024449	-0.02702871	7.832526684
F665	COMB1	5	0.461404622	68.38156128	0.022660075	-0.00024449	-0.05535381	-68.1574554
F665	COMB2	0	-2.32622695	-44.9031258	0.109432012	0.005026572	0.275440633	-43.511219
F665	COMB2	1.25	-2.32622695	-30.4000015	0.109432012	0.005026572	0.138650611	6.082533836

F665	COMB2	2.5	-2.32622695	0.614367425	0.109432012	0.005026572	0.001860584	24.96160316
F665	COMB2	3.75	-2.32622695	31.6287365	0.109432012	0.005026572	-0.13492942	4.546615601
F665	COMB2	5	-2.32622695	46.13185883	0.109432012	0.005026572	-0.27171943	-46.5830574
F665	COMB3	0	0.692840695	-45.3199997	0.041013177	0.001439387	0.102897674	-44.5589218
F665	COMB3	1.25	0.692840695	-30.8168793	0.041013177	0.001439387	0.051631201	5.55592823
F665	COMB3	2.5	0.692840695	0.197490335	0.041013177	0.001439387	0.000364726	24.95609283
F665	COMB3	3.75	0.692840695	31.21186066	0.041013177	0.001439387	-0.05090174	5.062202454
F665	COMB3	5	0.692840695	45.71498489	0.041013177	0.001439387	-0.10216822	-45.5463715
F666	D	0	0.966193974	-39.008934	0.004864296	0.055326518	0.012519257	-38.4875908
F666	D	1.25	0.966193974	-26.3683071	0.004864296	0.055326518	0.006438886	4.53789711
F666	D	2.5	0.966193974	0.403562188	0.004864296	0.055326518	0.000358516	20.9909935
F666	D	3.75	0.966193974	27.17543221	0.004864296	0.055326518	-0.00572185	3.528991461
F666	D	5	0.966193974	39.81605148	0.004864296	0.055326518	-0.01180222	-40.5054016
F666	L	0	-0.48392496	-13.1991348	0.005223804	0.014240858	0.013570449	-13.5587101
F666	L	1.25	-0.48392496	-9.29288387	0.005223804	0.014240858	0.007040694	1.312604666
F666	L	2.5	-0.48392496	-0.07413409	0.005223804	0.014240858	0.000510939	7.251626492
F666	L	3.75	-0.48392496	9.144616127	0.005223804	0.014240858	-0.00601882	1.497939944
F666	L	5	-0.48392496	13.05086613	0.005223804	0.014240858	-0.01254857	-13.1880398
F666	EX	0	-2.4793222	0.616837144	-0.02746366	-0.00248824	-0.06860914	1.53074491
F666	EX	1.25	-2.4793222	0.616837144	-0.02746366	-0.00248824	-0.03427956	0.759698451
F666	EX	2.5	-2.4793222	0.616837144	-0.02746366	-0.00248824	5.00102E-05	-0.011348
F666	EX	3.75	-2.4793222	0.616837144	-0.02746366	-0.00248824	0.034379583	-0.78239447
F666	EX	5	-2.4793222	0.616837144	-0.02746366	-0.00248824	0.068709157	-1.55344093
F666	EY	0	0.431300431	-0.01099411	-0.68436229	0.002938429	-1.71667647	-0.02687573
F666	EY	1.25	0.431300431	-0.01099411	-0.68436229	0.002938429	-0.86122358	-0.01313309
F666	EY	2.5	0.431300431	-0.01099411	-0.68436229	0.002938429	-0.00577073	0.000609543
F666	EY	3.75	0.431300431	-0.01099411	-0.68436229	0.002938429	0.849682152	0.014352176
F666	EY	5	0.431300431	-0.01099411	-0.68436229	0.002938429	1.705134988	0.02809481
F666	COMB1	0	0.385152817	-67.9293365	0.014195243	0.089177191	0.036735829	-67.8790436
F666	COMB1	1.25	0.385152817	-46.510582	0.014195243	0.089177191	0.018991774	7.545643806
F666	COMB1	2.5	0.385152817	0.365660071	0.014195243	0.089177191	0.001247721	36.79179382
F666	COMB1	3.75	0.385152817	47.24190521	0.014195243	0.089177191	-0.01649633	6.631493568
F666	COMB1	5	0.385152817	68.66065216	0.014195243	0.089177191	-0.03424039	-69.7073441
F666	COMB2	0	-1.56817162	-44.4821434	-0.23724599	0.060928993	-0.59434366	-43.1071091
F666	COMB2	1.25	-1.56817162	-29.9790173	-0.23724599	0.060928993	-0.29778612	5.960413456
F666	COMB2	2.5	-1.56817162	1.035351276	-0.23724599	0.060928993	-0.00122863	24.3132534
F666	COMB2	3.75	-1.56817162	32.04972076	-0.23724599	0.060928993	0.295328856	3.372034788
F666	COMB2	5	-1.56817162	46.55284119	-0.23724599	0.060928993	0.591886342	-48.2838669
F666	COMB3	0	0.533946276	-44.9343452	-0.72047842	0.064880267	-1.80670226	-44.2290001
F666	COMB3	1.25	0.533946276	-30.431221	-0.72047842	0.064880267	-0.90610421	5.403777599
F666	COMB3	2.5	0.533946276	0.583147943	-0.72047842	0.064880267	-0.00550613	24.3218708
F666	COMB3	3.75	0.533946276	31.59751701	-0.72047842	0.064880267	0.895091951	3.945907593
F666	COMB3	5	0.533946276	46.10063934	-0.72047842	0.064880267	1.79568994	-47.1447411
F667	D	0	0.560064316	-42.9098663	0.029927736	0.038868099	0.073817097	-43.0684319
F667	D	1.25	0.560064316	-30.2692451	0.029927736	0.038868099	0.036407422	4.833224297
F667	D	2.5	0.560064316	-3.49737406	0.029927736	0.038868099	-0.00100225	26.16249084
F667	D	3.75	0.560064316	23.27449608	0.029927736	0.038868099	-0.03841192	13.5766592
F667	D	5	0.560064316	35.91511917	0.029927736	0.038868099	-0.07582159	-25.5815639
F667	L	0	-0.29404101	-14.2869415	0.001988451	0.001832566	0.006540127	-14.2966909
F667	L	1.25	-0.29404101	-10.3806925	0.001988451	0.001832566	0.004054563	1.934382677
F667	L	2.5	-0.29404101	-1.16194165	0.001988451	0.001832566	0.001568999	9.233163834
F667	L	3.75	-0.29404101	8.056808472	0.001988451	0.001832566	-0.00091656	4.839236736
F667	L	5	-0.29404101	11.96305847	0.001988451	0.001832566	-0.00340213	-8.48698235
F667	EX	0	-1.23855054	0.931341708	-0.03907417	-0.00110566	-0.09401058	1.87665236
F667	EX	1.25	-1.23855054	0.931341708	-0.03907417	-0.00110566	-0.04516786	0.712475181
F667	EX	2.5	-1.23855054	0.931341708	-0.03907417	-0.00110566	0.003674856	-0.45170194
F667	EX	3.75	-1.23855054	0.931341708	-0.03907417	-0.00110566	0.052517571	-1.61587906
F667	EX	5	-1.23855054	0.931341708	-0.03907417	-0.00110566	0.101360291	-2.78005624
F667	EY	0	0.073457651	0.000714267	-0.33206427	-0.00045793	-0.82659346	0.005712514
F667	EY	1.25	0.073457651	0.000714267	-0.33206427	-0.00045793	-0.41151309	0.00481968
F667	EY	2.5	0.073457651	0.000714267	-0.33206427	-0.00045793	0.003567264	0.003926847
F667	EY	3.75	0.073457651	0.000714267	-0.33206427	-0.00045793	0.418647647	0.003034013
F667	EY	5	0.073457651	0.000714267	-0.33206427	-0.00045793	0.833727956	0.00214118
F667	COMB1	0	0.201611549	-74.3509445	0.039094806	0.049573824	0.099044718	-74.5568237
F667	COMB1	1.25	0.201611549	-52.9322014	0.039094806	0.049573824	0.050176207	8.894881248
F667	COMB1	2.5	0.201611549	-6.05595541	0.039094806	0.049573824	0.0013077	46.16805267
F667	COMB1	3.75	0.201611549	40.82028961	0.039094806	0.049573824	-0.04756081	24.03477097
F667	COMB1	5	0.201611549	62.23903656	0.039094806	0.049573824	-0.09642932	-44.2770462
F667	COMB2	0	-0.76331609	-48.5915833	-0.11299153	0.040100157	-0.27810979	-47.7811775
F667	COMB2	1.25	-0.76331609	-34.0884628	-0.11299153	0.040100157	-0.13687037	6.423146248
F667	COMB2	2.5	-0.76331609	-3.07409072	-0.11299153	0.040100157	0.004369037	29.91278839
F667	COMB2	3.75	-0.76331609	27.94028091	-0.11299153	0.040100157	0.145608455	14.10837269
F667	COMB2	5	-0.76331609	42.44340134	-0.11299153	0.040100157	0.28684786	-32.4107246
F667	COMB3	0	0.182431698	-49.2616234	-0.32892537	0.040559657	-0.81796837	-49.12817
F667	COMB3	1.25	0.182431698	-34.758503	-0.32892537	0.040559657	-0.40681162	5.913706779
F667	COMB3	2.5	0.182431698	-3.74413157	-0.32892537	0.040559657	0.004345079	30.24090004
F667	COMB3	3.75	0.182431698	27.27023888	-0.32892537	0.040559657	0.415501803	15.27403545
F667	COMB3	5	0.182431698	41.77336121	-0.32892537	0.040559657	0.826658487	-30.4075108
F668	D	0	-12.1174297	11.86625385	-0.24141707	-14.0025654	-0.4541499	66.33565521
F668	D	0.75	-12.1174297	24.20654106	-0.24141707	-14.0025654	-0.27308747	53.04217529
F668	D	1.5	-12.1174297	40.28744507	-0.24141707	-14.0025654	-0.09202503	29.090765
F668	D	2.25	-12.1174297	56.36835098	-0.24141707	-14.0025654	0.089037418	-7.38887501
F668	D	3	-12.1174297	68.70864105	-0.24141707	-14.0025654	0.270099849	-54.5264435
F668	L	0	-2.49501896	4.824938774	0.101669848	-4.53382206	0.21935682	13.63261795

F668	L	0.75	-2.49501896	5.528061867	0.101669848	-4.53382206	0.143104598	9.838140488
F668	L	1.5	-2.49501896	7.637433052	0.101669848	-4.53382206	0.066852354	4.988980293
F668	L	2.25	-2.49501896	9.746804237	0.101669848	-4.53382206	-0.00939989	-1.61798584
F668	L	3	-2.49501896	10.44992733	0.101669848	-4.53382206	-0.08565213	-9.27963543
F668	EX	0	0.384128392	-0.3556205	1.092855334	1.465927005	2.101672888	-0.80968785
F668	EX	0.75	0.384128392	-0.3556205	1.092855334	1.465927005	1.282033205	-0.54297304
F668	EX	1.5	0.384128392	-0.3556205	1.092855334	1.465927005	0.462393343	-0.2762582
F668	EX	2.25	0.384128392	-0.3556205	1.092855334	1.465927005	-0.35724649	-0.00954339
F668	EX	3	0.384128392	-0.3556205	1.092855334	1.465927005	-1.17688632	0.257171422
F668	EY	0	-7.23907948	6.17536974	-0.45401278	0.005432817	-0.41632235	-1.72023618
F668	EY	0.75	-7.23907948	6.17536974	-0.45401278	0.005432817	-0.07581345	-6.35175419
F668	EY	1.5	-7.23907948	6.17536974	-0.45401278	0.005432817	0.264695466	-10.9832726
F668	EY	2.25	-7.23907948	6.17536974	-0.45401278	0.005432817	0.605204344	-15.6147909
F668	EY	3	-7.23907948	6.17536974	-0.45401278	0.005432817	0.945713282	-20.2463093
F668	COMB1	0	-18.5329456	21.9594059	-0.12702872	-24.0571938	-0.19400898	101.414978
F668	COMB1	0.75	-18.5329456	37.89274979	-0.12702872	-24.0571938	-0.0987376	79.39163208
F668	COMB1	1.5	-18.5329456	60.56482697	-0.12702872	-24.0571938	-0.00346627	42.89128494
F668	COMB1	2.25	-18.5329456	83.23690796	-0.12702872	-24.0571938	0.091805078	-11.4554272
F668	COMB1	3	-18.5329456	99.17025757	-0.12702872	-24.0571938	0.18707642	-80.2791443
F668	COMB2	0	-15.3919697	15.55659676	0.766629279	-14.6119022	1.636330009	72.56681061
F668	COMB2	0.75	-15.3919697	28.73538208	0.766629279	-14.6119022	1.061359167	56.23051834
F668	COMB2	1.5	-15.3919697	46.28478241	0.766629279	-14.6119022	0.486388385	28.37117386
F668	COMB2	2.25	-15.3919697	63.83418655	0.766629279	-14.6119022	-0.08858243	-13.1965208
F668	COMB2	3	-15.3919697	77.0129776	0.766629279	-14.6119022	-0.66355324	-66.287262
F668	COMB3	0	-20.9892654	20.35153961	-0.35392591	-15.6633759	-0.18287149	71.88541412
F668	COMB3	0.75	-20.9892654	33.53032684	-0.35392591	-15.6633759	0.082572438	51.95291901
F668	COMB3	1.5	-20.9892654	51.07972717	-0.35392591	-15.6633759	0.348016351	20.49737549
F668	COMB3	2.25	-20.9892654	68.6291275	-0.35392591	-15.6633759	0.613460243	-24.6665211
F668	COMB3	3	-20.9892654	81.80792236	-0.35392591	-15.6633759	0.878904164	-81.3534622
F669	D	0	-15.005024	33.1084671	-0.20406611	1.580715418	-0.33080864	95.24537659
F669	D	0.75	-15.005024	39.81907654	-0.20406611	1.580715418	-0.17775936	68.36518097
F669	D	1.5	-15.005024	54.01092148	-0.20406611	1.580715418	-0.02471008	33.6465683
F669	D	2.25	-15.005024	68.20277405	-0.20406611	1.580715418	0.128339201	-12.6510496
F669	D	3	-15.005024	74.91337585	-0.20406611	1.580715418	0.281388491	-66.7870712
F669	L	0	-5.13762474	11.28749371	0.045113482	0.331015289	0.106683373	30.01187325
F669	L	0.75	-5.13762474	12.69373989	0.045113482	0.331015289	0.072848327	21.19470787
F669	L	1.5	-5.13762474	16.91248131	0.045113482	0.331015289	0.039013285	10.26817799
F669	L	2.25	-5.13762474	21.13122368	0.045113482	0.331015289	0.005178245	-4.17396259
F669	L	3	-5.13762474	22.53747177	0.045113482	0.331015289	-0.0286568	-20.7254696
F669	EX	0	-0.25693884	0.15435265	0.628376424	1.793125629	0.97050184	0.268752098
F669	EX	0.75	-0.25693884	0.15435265	0.628376424	1.793125629	0.499220431	0.152987868
F669	EX	1.5	-0.25693884	0.15435265	0.628376424	1.793125629	0.027939087	0.0372236
F669	EX	2.25	-0.25693884	0.15435265	0.628376424	1.793125629	-0.44334227	-0.07854066
F669	EX	3	-0.25693884	0.15435265	0.628376424	1.793125629	-0.91462362	-0.19430493
F669	EY	0	-7.4385252	6.167977333	-1.41756952	0.011342417	-1.40917909	-1.74509358
F669	EY	0.75	-7.4385252	6.167977333	-1.41756952	0.011342417	-0.34600422	-6.37106752
F669	EY	1.5	-7.4385252	6.167977333	-1.41756952	0.011342417	0.717170775	-10.9970417
F669	EY	2.25	-7.4385252	6.167977333	-1.41756952	0.011342417	1.780345798	-15.6230154
F669	EY	3	-7.4385252	6.167977333	-1.41756952	0.011342417	2.843520641	-20.2489891
F669	COMB1	0	-26.2262287	57.79014969	-0.17269778	2.426482916	-0.22627698	162.313446
F669	COMB1	0.75	-26.2262287	68.09288025	-0.17269778	2.426482916	-0.0967539	115.9497452
F669	COMB1	1.5	-26.2262287	91.87307739	-0.17269778	2.426482916	0.032769162	56.80496979
F669	COMB1	2.25	-26.2262287	115.6532898	-0.17269778	2.426482916	0.162292227	-21.8596001
F669	COMB1	3	-26.2262287	125.9560089	-0.17269778	2.426482916	0.291815311	-113.305237
F669	COMB2	0	-19.9826946	40.42211914	0.003776536	3.623478889	0.246834174	109.1898422
F669	COMB2	0.75	-19.9826946	47.91122818	0.003776536	3.623478889	0.244001716	76.61122894
F669	COMB2	1.5	-19.9826946	64.14157104	0.003776536	3.623478889	0.241169348	35.13783264
F669	COMB2	2.25	-19.9826946	80.37191772	0.003776536	3.623478889	0.238336965	-19.6009407
F669	COMB2	3	-19.9826946	87.86101532	0.003776536	3.623478889	0.235504597	-83.2344894
F669	COMB3	0	-25.2650146	44.84444809	-1.49056816	2.340764999	-1.48767388	107.7136993
F669	COMB3	0.75	-25.2650146	52.33355713	-1.49056816	2.340764999	-0.36975008	71.81834412
F669	COMB3	1.5	-25.2650146	68.56389618	-1.49056816	2.340764999	0.748173714	27.02820587
F669	COMB3	2.25	-25.2650146	84.79424286	-1.49056816	2.340764999	1.866097569	-31.0273075
F669	COMB3	3	-25.2650146	92.28334808	-1.49056816	2.340764999	2.984021187	-97.9775925
F670	D	0	-24.3116779	29.21361923	-0.09559233	-0.21583977	-0.13851923	95.11093903
F670	D	0.75	-24.3116779	35.92423248	-0.09559233	-0.21583977	-0.06682514	71.1518631
F670	D	1.5	-24.3116779	50.11607361	-0.09559233	-0.21583977	0.004868966	39.35439301
F670	D	2.25	-24.3116779	64.30792236	-0.09559233	-0.21583977	0.076563068	-4.02209568
F670	D	3	-24.3116779	71.0185318	-0.09559233	-0.21583977	0.148257166	-55.2369881
F670	L	0	-7.6128068	10.06104946	-0.00570202	-0.02541733	0.014744525	29.80789948
F670	L	0.75	-7.6128068	11.46729565	-0.00570202	-0.02541733	0.019021032	21.91056633
F670	L	1.5	-7.6128068	15.68603802	-0.00570202	-0.02541733	0.023297539	11.90386677
F670	L	2.25	-7.6128068	19.90477943	-0.00570202	-0.02541733	0.027574046	-1.61844289
F670	L	3	-7.6128068	21.31102562	-0.00570202	-0.02541733	0.031850554	-17.2501202
F670	EX	0	-0.07109665	-0.10303416	-0.1736301	1.538884401	-0.2134285	0.077478901
F670	EX	0.75	-0.07109665	-0.10303416	-0.1736301	1.538884401	-0.08320618	0.154754356
F670	EX	1.5	-0.07109665	-0.10303416	-0.1736301	1.538884401	0.047016136	0.232029825
F670	EX	2.25	-0.07109665	-0.10303416	-0.1736301	1.538884401	0.177238449	0.30930528
F670	EX	3	-0.07109665	-0.10303416	-0.1736301	1.538884401	0.307460785	0.386580735
F670	EY	0	-7.67271852	5.932070255	-1.03343987	0.005453095	-0.99835455	-1.98470008
F670	EY	0.75	-7.67271852	5.932070255	-1.03343987	0.005453095	-0.22327621	-6.43374395
F670	EY	1.5	-7.67271852	5.932070255	-1.03343987	0.005453095	0.551802158	-10.8827877
F670	EY	2.25	-7.67271852	5.932070255	-1.03343987	0.005453095	1.326880574	-15.3318319
F670	EY	3	-7.67271852	5.932070255	-1.03343987	0.005453095	2.10195899	-19.7808762

F670	COMB1	0	-41.3545036	51.15402222	-0.12383402	-0.29967546	-0.14263184	161.8257599
F670	COMB1	0.75	-41.3545036	61.45675278	-0.12383402	-0.29967546	-0.04975651	120.4391403
F670	COMB1	1.5	-41.3545036	85.23694611	-0.12383402	-0.29967546	0.043118823	66.27146149
F670	COMB1	2.25	-41.3545036	109.0171509	-0.12383402	-0.29967546	0.135994151	-7.41602325
F670	COMB1	3	-41.3545036	119.3198776	-0.12383402	-0.29967546	0.228869483	-93.8845749
F670	COMB2	0	-30.4157867	35.60549164	-0.60740882	1.359824896	-0.67618084	108.7109833
F670	COMB2	0.75	-30.4157867	43.09460449	-0.60740882	1.359824896	-0.22062518	79.74482727
F670	COMB2	1.5	-30.4157867	59.32493973	-0.60740882	1.359824896	0.234930515	41.8839035
F670	COMB2	2.25	-30.4157867	75.55528259	-0.60740882	1.359824896	0.690486193	-9.24240589
F670	COMB2	3	-30.4157867	83.04438782	-0.60740882	1.359824896	1.14604187	-69.2634888
F670	COMB3	0	-36.0040474	40.03974915	-1.2419734	0.255836129	-1.25630295	107.1964417
F670	COMB3	0.75	-36.0040474	47.52885818	-1.2419734	0.255836129	-0.32482475	74.90460205
F670	COMB3	1.5	-36.0040474	63.75919724	-1.2419734	0.255836129	0.606653452	33.71799469
F670	COMB3	2.25	-36.0040474	79.9895401	-1.2419734	0.255836129	1.538131714	-20.7340031
F670	COMB3	3	-36.0040474	87.47864532	-1.2419734	0.255836129	2.469609976	-84.0807724
F671	D	0	-24.3050747	29.17157555	0.049164288	0.267074317	0.091788687	95.03411865
F671	D	0.75	-24.3050747	35.88218689	0.049164288	0.267074317	0.054915547	71.10657501
F671	D	1.5	-24.3050747	50.07402802	0.049164288	0.267074317	0.018042404	39.34064102
F671	D	2.25	-24.3050747	64.26587677	0.049164288	0.267074317	-0.01883074	-4.00431585
F671	D	3	-24.3050747	70.97648621	0.049164288	0.267074317	-0.05570388	-55.1876755
F671	L	0	-7.74684954	10.15669918	-0.04328968	-0.10606322	-0.06122677	30.11232185
F671	L	0.75	-7.74684954	11.56294727	-0.04328968	-0.10606322	-0.02875958	22.14325333
F671	L	1.5	-7.74684954	15.78168869	-0.04328968	-0.10606322	0.003707616	12.06481552
F671	L	2.25	-7.74684954	20.00042915	-0.04328968	-0.10606322	0.036174808	-1.5292325
F671	L	3	-7.74684954	21.40667534	-0.04328968	-0.10606322	0.068642005	-17.2326469
F671	EX	0	-0.07706496	0.104058735	-0.50914437	1.532044768	-0.80235571	-0.06947791
F671	EX	0.75	-0.07706496	0.104058735	-0.50914437	1.532044768	-0.42049816	-0.14752181
F671	EX	1.5	-0.07706496	0.104058735	-0.50914437	1.532044768	-0.03864069	-0.2255657
F671	EX	2.25	-0.07706496	0.104058735	-0.50914437	1.532044768	0.343216807	-0.30360961
F671	EX	3	-0.07706496	0.104058735	-0.50914437	1.532044768	0.725074291	-0.38165349
F671	EY	0	-7.67272663	5.932062149	1.033454418	-0.00545336	0.998368442	-1.98469853
F671	EY	0.75	-7.67272663	5.932062149	1.033454418	-0.00545336	0.223279223	-6.43373632
F671	EY	1.5	-7.67272663	5.932062149	1.033454418	-0.00545336	-0.55181009	-10.8827734
F671	EY	2.25	-7.67272663	5.932062149	1.033454418	-0.00545336	-1.32689941	-15.331811
F671	EY	3	-7.67272663	5.932062149	1.033454418	-0.00545336	-2.10198879	-19.7808495
F671	COMB1	0	-41.5610504	51.25661087	-0.01026634	0.150788039	0.012183589	162.2206573
F671	COMB1	0.75	-41.5610504	61.55934143	-0.01026634	0.150788039	0.019883333	120.7570953
F671	COMB1	1.5	-41.5610504	85.33953857	-0.01026634	0.150788039	0.027583072	66.51247406
F671	COMB1	2.25	-41.5610504	109.1197357	-0.01026634	0.150788039	0.035282809	-7.25195074
F671	COMB1	3	-41.5610504	119.4224625	-0.01026634	0.150788039	0.042982548	-93.7974472
F671	COMB2	0	-30.4572582	35.80581665	-0.16343999	1.830966592	-0.43886039	108.5741119
F671	COMB2	0.75	-30.4572582	43.29492569	-0.16343999	1.830966592	-0.3162806	79.4577179
F671	COMB2	1.5	-30.4572582	59.52526474	-0.16343999	1.830966592	-0.19370086	41.44655609
F671	COMB2	2.25	-30.4572582	75.7556076	-0.16343999	1.830966592	-0.07112111	-9.82999611
F671	COMB2	3	-30.4572582	83.24471283	-0.16343999	1.830966592	0.051458597	-70.0013199
F671	COMB3	0	-36.0412254	40.09095764	0.962732971	0.723886192	0.872636497	107.1653824
F671	COMB3	0.75	-36.0412254	47.5800705	0.962732971	0.723886192	0.150588319	74.83513641
F671	COMB3	1.5	-36.0412254	63.81040573	0.962732971	0.723886192	-0.57145995	33.61012268
F671	COMB3	2.25	-36.0412254	80.0407486	0.962732971	0.723886192	-1.29350829	-20.8802795
F671	COMB3	3	-36.0412254	87.52985382	0.962732971	0.723886192	-2.01555657	-84.2654572
F672	D	0	-15.135088	33.22061157	0.148685202	-1.80812335	0.278956115	95.61025238
F672	D	0.75	-15.135088	39.93122482	0.148685202	-1.80812335	0.167442426	68.64595032
F672	D	1.5	-15.135088	54.12306976	0.148685202	-1.80812335	0.055928748	33.84323502
F672	D	2.25	-15.135088	68.31491089	0.148685202	-1.80812335	-0.05558492	-12.5384912
F672	D	3	-15.135088	75.02552795	0.148685202	-1.80812335	-0.1670986	-66.7586212
F672	L	0	-6.84390211	10.44439697	-0.10076062	-0.59020746	-0.15878905	35.80717468
F672	L	0.75	-6.84390211	13.1162672	-0.10076062	-0.59020746	-0.08321875	27.30592728
F672	L	1.5	-6.84390211	21.13187599	-0.10076062	-0.59020746	-0.00764844	14.79688168
F672	L	2.25	-6.84390211	29.14748573	-0.10076062	-0.59020746	0.067921877	-4.39182377
F672	L	3	-6.84390211	31.81935501	-0.10076062	-0.59020746	0.143492177	-27.5883274
F672	EX	0	-0.03938565	-0.15048386	-0.47561759	1.75818944	-0.88532239	-0.26328975
F672	EX	0.75	-0.03938565	-0.15048386	-0.47561759	1.75818944	-0.52860993	-0.15042709
F672	EX	1.5	-0.03938565	-0.15048386	-0.47561759	1.75818944	-0.17189741	-0.03756442
F672	EX	2.25	-0.03938565	-0.15048386	-0.47561759	1.75818944	0.184815094	0.07529825
F672	EX	3	-0.03938565	-0.15048386	-0.47561759	1.75818944	0.541527569	0.188160911
F672	EY	0	-7.43852186	6.167975903	1.417563677	-0.01134245	1.409174085	-1.74509299
F672	EY	0.75	-7.43852186	6.167975903	1.417563677	-0.01134245	0.346003473	-6.37106562
F672	EY	1.5	-7.43852186	6.167975903	1.417563677	-0.01134245	-0.71716714	-10.9970379
F672	EY	2.25	-7.43852186	6.167975903	1.417563677	-0.01134245	-1.78033781	-15.6230106
F672	EY	3	-7.43852186	6.167975903	1.417563677	-0.01134245	-2.84350848	-20.2489834
F672	COMB1	0	-29.1123486	56.57577133	0.017205246	-3.11407995	0.080684833	172.0237885
F672	COMB1	0.75	-29.1123486	68.90349579	0.017205246	-3.11407995	0.067780912	126.064621
F672	COMB1	1.5	-29.1123486	98.75868225	0.017205246	-3.11407995	0.054876998	64.28689575
F672	COMB1	2.25	-29.1123486	128.6138611	0.017205246	-3.11407995	0.041973095	-22.0731087
F672	COMB1	3	-29.1123486	140.9416046	0.017205246	-3.11407995	0.029069183	-124.251671
F672	COMB2	0	-20.4315701	39.95878983	0.078648217	-0.26829171	-0.22953351	110.8478165
F672	COMB2	0.75	-20.4315701	47.84656906	0.078648217	-0.26829171	-0.28851956	78.51703644
F672	COMB2	1.5	-20.4315701	65.27292633	0.078648217	-0.26829171	-0.34750554	36.69346619
F672	COMB2	2.25	-20.4315701	82.69927216	0.078648217	-0.26829171	-0.40649155	-19.3921547
F672	COMB2	3	-20.4315701	90.58705902	0.078648217	-0.26829171	-0.46547759	-84.9705582
F672	COMB3	0	-25.8705254	44.6006012	1.463002205	-1.54252481	1.443641543	109.7547455
F672	COMB3	0.75	-25.8705254	52.48838043	1.463002205	-1.54252481	0.346392155	73.94261169
F672	COMB3	1.5	-25.8705254	69.91473389	1.463002205	-1.54252481	-0.75085729	28.6376915
F672	COMB3	2.25	-25.8705254	87.34108734	1.463002205	-1.54252481	-1.84810662	-30.9292831

F672	COMB3	3	-25.8705254	95.22886658	1.463002205	-1.54252481	-2.94535613	-99.9890366
F673	D	0	-14.5439987	10.6279192	0.20588474	13.64466858	0.431791961	74.81330109
F673	D	0.75	-14.5439987	24.83851624	0.20588474	13.64466858	0.277378708	61.98099136
F673	D	1.5	-14.5439987	46.53034592	0.20588474	13.64466858	0.122965455	35.68529129
F673	D	2.25	-14.5439987	68.2221756	0.20588474	13.64466858	-0.03144781	-7.81438971
F673	D	3	-14.5439987	82.43276978	0.20588474	13.64466858	-0.18586105	-64.7774582
F673	L	0	-5.13720751	3.598591805	-0.13199145	4.437786579	-0.24094848	22.80463791
F673	L	0.75	-5.13720751	6.270461559	-0.13199145	4.437786579	-0.14195509	19.4377327
F673	L	1.5	-5.13720751	14.28606987	-0.13199145	4.437786579	-0.04296171	12.06303215
F673	L	2.25	-5.13720751	22.30167961	-0.13199145	4.437786579	0.056031674	-1.99132907
F673	L	3	-5.13720751	24.9735508	-0.13199145	4.437786579	0.15502505	-20.0534859
F673	EX	0	0.05834911	0.35040608	-0.46147931	1.443166256	-0.94158638	0.796806812
F673	EX	0.75	0.05834911	0.35040608	-0.46147931	1.443166256	-0.59547758	0.534002721
F673	EX	1.5	0.05834911	0.35040608	-0.46147931	1.443166256	-0.24936877	0.27119869
F673	EX	2.25	0.05834911	0.35040608	-0.46147931	1.443166256	0.096740007	0.008394675
F673	EX	3	0.05834911	0.35040608	-0.46147931	1.443166256	0.442848802	-0.25440934
F673	EY	0	-7.239079	6.175372124	0.454008758	-0.00543293	0.416318536	-1.72023654
F673	EY	0.75	-7.239079	6.175372124	0.454008758	-0.00543293	0.075812638	-6.3517561
F673	EY	1.5	-7.239079	6.175372124	0.454008758	-0.00543293	-0.26469326	-10.9832764
F673	EY	2.25	-7.239079	6.175372124	0.454008758	-0.00543293	-0.60519916	-15.6147957
F673	EY	3	-7.239079	6.175372124	0.454008758	-0.00543293	-0.94570506	-20.2463131
F673	COMB1	0	-25.6723309	18.51124954	0.035875387	23.47406006	0.132632777	126.263382
F673	COMB1	0.75	-25.6723309	39.83895874	0.035875387	23.47406006	0.105726309	105.477562
F673	COMB1	1.5	-25.6723309	78.69412994	0.035875387	23.47406006	0.078819811	62.12320328
F673	COMB1	2.25	-25.6723309	117.5492935	0.035875387	23.47406006	0.051913314	-12.5633945
F673	COMB1	3	-25.6723309	138.8769989	0.035875387	23.47406006	0.025006823	-109.818527
F673	COMB2	0	-19.1093369	14.60078335	-0.16001663	17.21677017	-0.46591881	86.02024841
F673	COMB2	0.75	-19.1093369	30.36355019	-0.16001663	17.21677017	-0.3459065	69.75481415
F673	COMB2	1.5	-19.1093369	55.66488647	-0.16001663	17.21677017	-0.22589427	38.09037018
F673	COMB2	2.25	-19.1093369	80.96622467	-0.16001663	17.21677017	-0.10588204	-13.7423496
F673	COMB2	3	-19.1093369	96.72898865	-0.16001663	17.21677017	0.014130199	-80.9740753
F673	COMB3	0	-24.4720726	18.88739014	0.505944908	16.17369652	0.51801753	84.18217468
F673	COMB3	0.75	-24.4720726	34.65015411	0.505944908	16.17369652	0.138559639	64.70178986
F673	COMB3	1.5	-24.4720726	59.95149231	0.505944908	16.17369652	-0.24089828	29.82240105
F673	COMB3	2.25	-24.4720726	85.25283051	0.505944908	16.17369652	-0.6203562	-25.2252693
F673	COMB3	3	-24.4720726	101.0155945	0.505944908	16.17369652	-0.99981415	-95.6719437
F674	D	0	9.252981186	-38.2550125	0.061448906	0.623513222	0.18606621	-33.279171
F674	D	1.25	9.252981186	-22.7597027	0.061448906	0.623513222	0.109255083	5.937386036
F674	D	2.5	9.252981186	-0.19877063	0.061448906	0.623513222	0.032443944	20.39899826
F674	D	3.75	9.252981186	22.36216164	0.061448906	0.623513222	-0.04436719	6.434312344
F674	D	5	9.252981186	37.85747147	0.061448906	0.623513222	-0.12117831	-32.2853127
F674	L	0	-3.94682598	-11.8071308	-0.00847637	0.55846417	-0.02939328	-7.982934
F674	L	1.25	-3.94682598	-7.90088129	-0.00847637	0.55846417	-0.01879782	5.148375511
F674	L	2.5	-3.94682598	1.317869186	-0.00847637	0.55846417	-0.00820236	9.34739399
F674	L	3.75	-3.94682598	10.53661919	-0.00847637	0.55846417	0.002393103	1.853702307
F674	L	5	-3.94682598	14.44287014	-0.00847637	0.55846417	0.012988564	-14.5722809
F674	EX	0	-56.3324203	8.062307358	-0.3068237	0.037791345	-0.94457507	21.6367569
F674	EX	1.25	-56.3324203	8.062307358	-0.3068237	0.037791345	-0.56104541	11.55887222
F674	EX	2.5	-56.3324203	8.062307358	-0.3068237	0.037791345	-0.17751582	1.480988383
F674	EX	3.75	-56.3324203	8.062307358	-0.3068237	0.037791345	0.206013843	-8.59689617
F674	EX	5	-56.3324203	8.062307358	-0.3068237	0.037791345	0.589543462	-18.6747799
F674	EY	0	-0.52203053	0.019335803	0.286161453	-0.00041138	0.946773648	0.057803921
F674	EY	1.25	-0.52203053	0.019335803	0.286161453	-0.00041138	0.58907181	0.033634163
F674	EY	2.5	-0.52203053	0.019335803	0.286161453	-0.00041138	0.231369987	0.009464412
F674	EY	3.75	-0.52203053	0.019335803	0.286161453	-0.00041138	-0.12633185	-0.01470534
F674	EY	5	-0.52203053	0.019335803	0.286161453	-0.00041138	-0.48403373	-0.0388751
F674	COMB1	0	4.788655758	-64.7974243	0.060176495	1.641758561	0.176250204	-52.7076988
F674	COMB1	1.25	4.788655758	-39.9530525	0.060176495	1.641758561	0.101029582	15.36226368
F674	COMB1	2.5	4.788655758	1.870066047	0.060176495	1.641758561	0.025808962	39.43462753
F674	COMB1	3.75	4.788655758	43.6931839	0.060176495	1.641758561	-0.04941166	10.6870985
F674	COMB1	5	4.788655758	68.53755951	0.060176495	1.641758561	-0.12463228	-62.0580254
F674	COMB2	0	-49.9961166	-35.5364304	-0.16557038	0.869589567	-0.49329087	-15.0454998
F674	COMB2	1.25	-49.9961166	-18.0358868	-0.16557038	0.869589567	-0.28632787	19.8300209
F674	COMB2	2.5	-49.9961166	8.556998253	-0.16557038	0.869589567	-0.07936492	25.89918137
F674	COMB2	3.75	-49.9961166	35.14988327	-0.16557038	0.869589567	0.127598077	-1.56247532
F674	COMB2	5	-49.9961166	52.65042877	-0.16557038	0.869589567	0.33456102	-57.8304901
F674	COMB3	0	-9.82046509	-41.3270798	0.265671372	0.842077434	0.882681787	-30.58148
F674	COMB3	1.25	-9.82046509	-23.8265362	0.265671372	0.842077434	0.550592661	11.53235435
F674	COMB3	2.5	-9.82046509	2.766348839	0.265671372	0.842077434	0.218503401	24.83982468
F674	COMB3	3.75	-9.82046509	29.35923386	0.265671372	0.842077434	-0.11358581	4.616481304
F674	COMB3	5	-9.82046509	46.85977936	0.265671372	0.842077434	-0.44567505	-44.4132233
F675	D	0	10.60415745	-49.8461151	0.062739745	0.583285928	0.172573447	-43.2345047
F675	D	1.25	10.60415745	-28.1008034	0.062739745	0.583285928	0.09414877	6.564678192
F675	D	2.5	10.60415745	0.710131288	0.062739745	0.583285928	0.015724093	23.79641342
F675	D	3.75	10.60415745	29.52106667	0.062739745	0.583285928	-0.06270058	4.789349556
F675	D	5	10.60415745	51.2663765	0.062739745	0.583285928	-0.14112526	-46.7851601
F675	L	0	-4.4244523	-13.0177879	0.012566394	0.183387011	0.025111377	-12.9563189
F675	L	1.25	-4.4244523	-9.11153698	0.012566394	0.183387011	0.009403383	1.688311934
F675	L	2.5	-4.4244523	0.107213154	0.012566394	0.183387011	-0.00630461	7.400650024
F675	L	3.75	-4.4244523	9.32596302	0.012566394	0.183387011	-0.0220126	1.420279026
F675	L	5	-4.4244523	13.23221397	0.012566394	0.183387011	-0.0377206	-13.492384
F675	EX	0	-44.7352295	6.730798244	-0.09916947	0.017864631	-0.23720779	17.17873573
F675	EX	1.25	-44.7352295	6.730798244	-0.09916947	0.017864631	-0.11324593	8.765236855
F675	EX	2.5	-44.7352295	6.730798244	-0.09916947	0.017864631	0.010715914	0.351739258

F675	EX	3.75	-44.7352295	6.730798244	-0.09916947	0.017864631	0.134677753	-8.061759
F675	EX	5	-44.7352295	6.730798244	-0.09916947	0.017864631	0.258639634	-16.4752579
F675	EY	0	-1.9972775	0.030093398	1.029021382	0.006057423	2.476415157	0.084119156
F675	EY	1.25	-1.9972775	0.030093398	1.029021382	0.006057423	1.190138459	0.046502411
F675	EY	2.5	-1.9972775	0.030093398	1.029021382	0.006057423	-0.09613833	0.008885663
F675	EY	3.75	-1.9972775	0.030093398	1.029021382	0.006057423	-1.38241518	-0.02873109
F675	EY	5	-1.9972775	0.030093398	1.029021382	0.006057423	-2.66869187	-0.06634784
F675	COMB1	0	5.645864964	-80.6437988	0.095393918	0.993362367	0.247266337	-72.6115112
F675	COMB1	1.25	5.645864964	-48.2994232	0.095393918	0.993362367	0.128023937	10.57891273
F675	COMB1	2.5	5.645864964	1.023698568	0.095393918	0.993362367	0.008781534	40.39673615
F675	COMB1	3.75	5.645864964	50.34682083	0.095393918	0.993362367	-0.11046087	8.019665718
F675	COMB1	5	5.645864964	82.69119263	0.095393918	0.993362367	-0.22970328	-77.7300034
F675	COMB2	0	-37.1894417	-49.4631691	0.291336477	0.690615118	0.723672926	-31.6709785
F675	COMB2	1.25	-37.1894417	-25.4001217	0.291336477	0.690615118	0.359502345	16.51139832
F675	COMB2	2.5	-37.1894417	7.755265713	0.291336477	0.690615118	-0.00466826	27.68428802
F675	COMB2	3.75	-37.1894417	40.91065216	0.291336477	0.690615118	-0.36883888	-2.8767662
F675	COMB2	5	-37.1894417	64.97370148	0.291336477	0.690615118	-0.73300946	-70.4473114
F675	COMB3	0	-6.44807625	-54.2872238	1.119069219	0.682204783	2.714627743	-43.9778404
F675	COMB3	1.25	-6.44807625	-30.2241783	1.119069219	0.682204783	1.315791249	10.2346077
F675	COMB3	2.5	-6.44807625	2.931209564	1.119069219	0.682204783	-0.08304539	27.43756676
F675	COMB3	3.75	-6.44807625	36.08659744	1.119069219	0.682204783	-1.48188198	2.906583309
F675	COMB3	5	-6.44807625	60.14964294	1.119069219	0.682204783	-2.88071847	-58.6338921
F676	D	0	10.97572422	-50.510025	0.007674242	-0.0021215	0.02656523	-45.4480057
F676	D	1.25	10.97572422	-28.7647133	0.007674242	-0.0021215	0.016972424	5.181061745
F676	D	2.5	10.97572422	0.046220709	0.007674242	-0.0021215	0.007379622	23.24268341
F676	D	3.75	10.97572422	28.85715294	0.007674242	-0.0021215	-0.00221318	5.065509796
F676	D	5	10.97572422	50.60246658	0.007674242	-0.0021215	-0.01180599	-45.6791115
F676	L	0	-4.23282719	-13.0209103	0.005312698	0.020988015	0.005080533	-13.0524836
F676	L	1.25	-4.23282719	-9.11465931	0.005312698	0.020988015	-0.00156034	1.596050262
F676	L	2.5	-4.23282719	0.104090631	0.005312698	0.020988015	-0.00820121	7.312291622
F676	L	3.75	-4.23282719	9.322840691	0.005312698	0.020988015	-0.01484209	1.335823655
F676	L	5	-4.23282719	13.22909069	0.005312698	0.020988015	-0.02148296	-13.5729361
F676	EX	0	-30.0584736	6.203510761	0.240589932	-0.0450702	0.563206255	15.51560783
F676	EX	1.25	-30.0584736	6.203510761	0.240589932	-0.0450702	0.262468815	7.761219501
F676	EX	2.5	-30.0584736	6.203510761	0.240589932	-0.0450702	-0.0382686	0.006831066
F676	EX	3.75	-30.0584736	6.203510761	0.240589932	-0.0450702	-0.33900601	-7.74755764
F676	EX	5	-30.0584736	6.203510761	0.240589932	-0.0450702	-0.63974345	-15.5019455
F676	EY	0	-3.00871444	-1.7387E-07	-8.3825E-06	1.36102E-06	-0.54336441	-0.0190826
F676	EY	1.25	-3.00871444	-1.7387E-07	-8.3825E-06	1.36102E-06	-0.54335392	-0.01908238
F676	EY	2.5	-3.00871444	-1.7387E-07	-8.3825E-06	1.36102E-06	-0.54334342	-0.01908216
F676	EY	3.75	-3.00871444	-1.7387E-07	-8.3825E-06	1.36102E-06	-0.54333293	-0.01908194
F676	EY	5	-3.00871444	-1.7387E-07	-8.3825E-06	1.36102E-06	-0.5433225	-0.01908173
F676	COMB1	0	6.398346424	-81.445488	0.017709408	0.031035023	0.040007126	-75.4215775
F676	COMB1	1.25	6.398346424	-49.1011124	0.017709408	0.031035023	0.017870365	8.770954132
F676	COMB1	2.5	6.398346424	0.222009853	0.017709408	0.031035023	-0.0042664	39.59088898
F676	COMB1	3.75	6.398346424	49.54513168	0.017709408	0.031035023	-0.02640316	8.215929031
F676	COMB1	5	6.398346424	81.88950348	0.017709408	0.031035023	-0.04853992	-76.5316315
F676	COMB2	0	-21.867094	-50.7164803	0.258739382	-0.04226359	0.441252559	-35.7792969
F676	COMB2	1.25	-21.867094	-26.6534328	0.258739382	-0.04226359	0.11782828	13.96972179
F676	COMB2	2.5	-21.867094	6.501953602	0.258739382	-0.04226359	-0.20559596	26.7092495
F676	COMB2	3.75	-21.867094	39.657341	0.258739382	-0.04226359	-0.52902019	-2.28516316
F676	COMB2	5	-21.867094	63.72038651	0.258739382	-0.04226359	-0.85244447	-68.2890625
F676	COMB3	0	-2.43639874	-55.1830063	0.085508481	-0.00981204	-0.36362877	-46.9645576
F676	COMB3	1.25	-2.43639874	-31.1199608	0.085508481	-0.00981204	-0.47051439	8.367617607
F676	COMB3	2.5	-2.43639874	2.035425901	0.085508481	-0.00981204	-0.57740003	26.69030571
F676	COMB3	3.75	-2.43639874	35.19081116	0.085508481	-0.00981204	-0.68428558	3.279052973
F676	COMB3	5	-2.43639874	59.25386047	0.085508481	-0.00981204	-0.79117119	-57.1416893
F677	D	0	10.8685627	-51.0682297	-0.046552	-0.55533832	-0.09685203	-46.4032364
F677	D	1.25	10.8685627	-29.3229198	-0.046552	-0.55533832	-0.03866202	4.923589706
F677	D	2.5	10.8685627	-0.51198554	-0.046552	-0.55533832	0.019527983	23.68297195
F677	D	3.75	10.8685627	28.29894829	-0.046552	-0.55533832	0.07771799	6.203554153
F677	D	5	10.8685627	50.04425812	-0.046552	-0.55533832	0.135908008	-43.8433113
F677	L	0	-4.3655858	-13.2817945	0.014211833	0.153609142	0.031279158	-13.6617689
F677	L	1.25	-4.3655858	-9.37554455	0.014211833	0.153609142	0.013514367	1.312870622
F677	L	2.5	-4.3655858	-0.15679376	0.014211833	0.153609142	-0.00425042	7.35521698
F677	L	3.75	-4.3655858	9.061957359	0.014211833	0.153609142	-0.02201522	1.704855084
F677	L	5	-4.3655858	12.96820641	0.014211833	0.153609142	-0.03978001	-12.877799
F677	EX	0	-15.7970648	6.64431715	0.051638167	0.017163418	0.063808247	16.31842041
F677	EX	1.25	-15.7970648	6.64431715	0.051638167	0.017163418	-0.00073946	8.01302433
F677	EX	2.5	-15.7970648	6.64431715	0.051638167	0.017163418	-0.06528717	-0.29237247
F677	EX	3.75	-15.7970648	6.64431715	0.051638167	0.017163418	-0.12983489	-8.59776974
F677	EX	5	-15.7970648	6.64431715	0.051638167	0.017163418	-0.19438259	-16.9031658
F677	EY	0	-1.99726427	-0.03009416	-1.02901781	-0.00605852	-2.66867757	-0.06634985
F677	EY	1.25	-1.99726427	-0.03009416	-1.02901781	-0.00605852	-1.38240528	-0.02873215
F677	EY	2.5	-1.99726427	-0.03009416	-1.02901781	-0.00605852	-0.09613287	0.008885555
F677	EY	3.75	-1.99726427	-0.03009416	-1.02901781	-0.00605852	1.190139413	0.046503261
F677	EY	5	-1.99726427	-0.03009416	-1.02901781	-0.00605852	2.476412058	0.084120959
F677	COMB1	0	6.057337761	-82.5327454	-0.03312347	-0.42063135	-0.06617578	-77.542717
F677	COMB1	1.25	6.057337761	-50.1883736	-0.03312347	-0.42063135	-0.02477144	8.008900642
F677	COMB1	2.5	6.057337761	-0.86525267	-0.03312347	-0.42063135	0.0166329	40.18791199
F677	COMB1	3.75	6.057337761	48.45786667	-0.03312347	-0.42063135	0.05803724	10.17203331
F677	COMB1	5	6.057337761	80.80223846	-0.03312347	-0.42063135	0.099441588	-73.2164536
F677	COMB2	0	-6.94226885	-50.9380188	-0.31509799	-0.51886266	-0.86643362	-36.1581917
F677	COMB2	1.25	-6.94226885	-26.8749733	-0.31509799	-0.51886266	-0.47256109	13.86775303

F677	COMB2	2.5	-6.94226885	6.280413628	-0.31509799	-0.51886266	-0.07868858	26.88420677
F677	COMB2	3.75	-6.94226885	39.43579865	-0.31509799	-0.51886266	0.315183908	-1.83328176
F677	COMB2	5	-6.94226885	63.49884415	-0.31509799	-0.51886266	0.709056497	-67.560257
F677	COMB3	0	2.963628292	-55.7440453	-1.10860562	-0.53567332	-2.87385368	-47.9562225
F677	COMB3	1.25	2.963628292	-31.6809998	-1.10860562	-0.53567332	-1.48809648	8.077257156
F677	COMB3	2.5	2.963628292	1.474386215	-1.10860562	-0.53567332	-0.10233947	27.10124588
F677	COMB3	3.75	2.963628292	34.62977219	-1.10860562	-0.53567332	1.283417583	4.391292095
F677	COMB3	5	2.963628292	58.69281769	-1.10860562	-0.53567332	2.669174671	-55.3281517
F678	D	0	9.446311951	-37.92239	-0.02793777	-0.13242832	-0.0395334	-32.526371
F678	D	1.25	9.446311951	-22.4270802	-0.02793777	-0.13242832	-0.00461119	6.274404526
F678	D	2.5	9.446311951	0.133852005	-0.02793777	-0.13242832	0.030311024	20.32023811
F678	D	3.75	9.446311951	22.69478607	-0.02793777	-0.13242832	0.065233238	5.939774513
F678	D	5	9.446311951	38.19009399	-0.02793777	-0.13242832	0.10015545	-33.1956329
F678	L	0	-3.95061898	-14.3435249	0.031636648	-0.35491982	0.065822899	-14.29704
F678	L	1.25	-3.95061898	-10.437274	0.031636648	-0.35491982	0.026277089	2.004761457
F678	L	2.5	-3.95061898	-1.21852434	0.031636648	-0.35491982	-0.01326872	9.374271393
F678	L	3.75	-3.95061898	8.000226021	0.031636648	-0.35491982	-0.05281453	5.051072121
F678	L	5	-3.95061898	11.90647602	0.031636648	-0.35491982	-0.09236035	-8.20441914
F678	EX	0	-5.30984354	7.92628479	0.144299805	0.037329122	0.332243413	18.3295784
F678	EX	1.25	-5.30984354	7.92628479	0.144299805	0.037329122	0.151868656	8.421721458
F678	EX	2.5	-5.30984354	7.92628479	0.144299805	0.037329122	-0.02850609	-1.48613489
F678	EX	3.75	-5.30984354	7.92628479	0.144299805	0.037329122	-0.20888084	-11.3939915
F678	EX	5	-5.30984354	7.92628479	0.144299805	0.037329122	-0.38925561	-21.3018494
F678	EY	0	-0.52202517	-0.01933637	-0.28615871	0.000410792	-0.48402742	-0.03887636
F678	EY	1.25	-0.52202517	-0.01933637	-0.28615871	0.000410792	-0.12632899	-0.0147059
F678	EY	2.5	-0.52202517	-0.01933637	-0.28615871	0.000410792	0.231369421	0.009464556
F678	EY	3.75	-0.52202517	-0.01933637	-0.28615871	0.000410792	0.589067876	0.033635017
F678	EY	5	-0.52202517	-0.01933637	-0.28615871	0.000410792	0.946766317	0.057805475
F678	COMB1	0	5.014584064	-68.4565048	0.017093316	-0.72678572	0.057876557	-61.9069099
F678	COMB1	1.25	5.014584064	-43.612133	0.017093316	-0.72678572	0.036509916	10.73690414
F678	COMB1	2.5	5.014584064	-1.78901649	0.017093316	-0.72678572	0.015143274	39.38311768
F678	COMB1	3.75	5.014584064	40.03410339	0.017093316	-0.72678572	-0.00622336	15.209445
F678	COMB1	5	5.014584064	64.87847137	0.017093316	-0.72678572	-0.02759001	-52.9618301
F678	COMB2	0	3.014056921	-36.1391068	0.03984119	-0.21208443	0.170627445	-19.6973915
F678	COMB2	1.25	3.014056921	-18.6385612	0.03984119	-0.21208443	0.120825969	15.93147469
F678	COMB2	2.5	3.014056921	7.954323292	0.03984119	-0.21208443	0.071024492	22.75397682
F678	COMB2	3.75	3.014056921	34.54721069	0.03984119	-0.21208443	0.021223025	-3.95433521
F678	COMB2	5	3.014056921	52.04775238	0.03984119	-0.21208443	-0.02857845	-59.4690132
F678	COMB3	0	6.453455448	-41.8602409	-0.27438131	-0.23865947	-0.42434797	-32.9232635
F678	COMB3	1.25	6.453455448	-24.3596992	-0.27438131	-0.23865947	-0.08137127	9.8570261
F678	COMB3	2.5	6.453455448	2.233186007	-0.27438131	-0.23865947	0.261605412	23.83094978
F678	COMB3	3.75	6.453455448	28.82607269	-0.27438131	-0.23865947	0.604582071	4.274060726
F678	COMB3	5	6.453455448	46.32661438	-0.27438131	-0.23865947	0.94755882	-44.0891953
F679	D	0	-40.1751251	-20.7468376	-7.03743792	-0.09291502	-13.7985353	-31.3299637
F679	D	1.440000057	-37.064724	-20.7468376	-7.03743792	-0.09291502	-3.66461897	-1.45449555
F679	D	2.880000114	-33.9543228	-20.7468376	-7.03743792	-0.09291502	6.469297409	28.42097282
F679	L	0	-0.0763275	-0.42754453	-1.0192647	-0.01852303	-2.33395934	-1.19089746
F679	L	1.440000057	-0.0763275	-0.42754453	-1.0192647	-0.01852303	-0.86621708	-0.57523286
F679	L	2.880000114	-0.0763275	-0.42754453	-1.0192647	-0.01852303	0.601525009	0.040431671
F679	EX	0	2.282494307	2.401462078	0.043740299	0.011535898	0.085498065	1.722504854
F679	EX	1.440000057	2.282494307	2.401462078	0.043740299	0.011535898	0.022511993	-1.73560274
F679	EX	2.880000114	2.282494307	2.401462078	0.043740299	0.011535898	-0.04047408	-5.19371033
F679	EY	0	0.467069566	-0.03916287	0.431320727	-0.02569355	-0.23700269	-0.05271227
F679	EY	1.440000057	0.467069566	-0.03916287	0.431320727	-0.02569355	-0.85810488	0.003682299
F679	EY	2.880000114	0.467069566	-0.03916287	0.431320727	-0.02569355	-1.47920716	0.06007687
F679	COMB1	0	-48.3322754	-25.5802765	-10.0757484	-0.14113487	-20.2925777	-39.5013924
F679	COMB1	1.440000057	-44.5997925	-25.5802765	-10.0757484	-0.14113487	-5.78349018	-2.66576719
F679	COMB1	2.880000114	-40.8673096	-25.5802765	-10.0757484	-0.14113487	8.725597382	34.16985703
F679	COMB2	0	-39.6984177	-19.4456806	-7.52924061	-0.09954934	-15.2098246	-31.5054054
F679	COMB2	1.440000057	-36.4324951	-19.4456806	-7.52924061	-0.09954934	-4.36771154	-3.50360775
F679	COMB2	2.880000114	-33.1665726	-19.4456806	-7.52924061	-0.09954934	6.474401951	24.49819183
F679	COMB3	0	-40.9985161	-21.2035179	-7.2437129	-0.12673993	-15.4455805	-32.7843513
F679	COMB3	1.440000057	-37.7325935	-21.2035179	-7.2437129	-0.12673993	-5.01462698	-2.25126719
F679	COMB3	2.880000114	-34.466671	-21.2035179	-7.2437129	-0.12673993	5.416326046	28.2818203
F680	D	0	-56.5409393	-0.83160418	-8.21892548	0.022836553	-16.559269	-8.76868629
F680	D	1.440000057	-53.4305382	-0.83160418	-8.21892548	0.022836553	-4.72400856	-7.57117462
F680	D	2.880000114	-50.3201332	-0.83160418	-8.21892548	0.022836553	7.111251354	-6.3736639
F680	L	0	-0.45964828	0.499859959	-2.19438052	-0.01827085	-4.92494249	0.989015698
F680	L	1.440000057	-0.45964828	0.499859959	-2.19438052	-0.01827085	-1.76503253	0.269216865
F680	L	2.880000114	-0.45964828	0.499859959	-2.19438052	-0.01827085	1.394877434	-0.45058197
F680	EX	0	-2.27417779	3.92023325	-0.01794372	-0.00143049	-0.03778132	5.108515739
F680	EX	1.440000057	-2.27417779	3.92023325	-0.01794372	-0.00143049	-0.01194234	-0.53662413
F680	EX	2.880000114	-2.27417779	3.92023325	-0.01794372	-0.00143049	0.013896633	-6.18176365
F680	EY	0	0.580478251	-0.08014093	0.622618198	0.086839311	0.096896388	-0.14709336
F680	EY	1.440000057	0.580478251	-0.08014093	0.622618198	0.086839311	-0.79967433	-0.03169036
F680	EY	2.880000114	0.580478251	-0.08014093	0.622618198	0.086839311	-1.69624507	0.083712652
F680	COMB1	0	-68.5845642	-0.19814907	-13.3737192	-0.00182949	-27.7510319	-8.93999863
F680	COMB1	1.440000057	-64.8520813	-0.19814907	-13.3737192	-0.00182949	-8.4928627	-8.65466213
F680	COMB1	2.880000114	-61.1195984	-0.19814907	-13.3737192	-0.00182949	10.76530552	-8.36932755
F680	COMB2	0	-61.6837006	3.316468477	-9.14354897	0.044096887	-18.9471722	-3.65460134
F680	COMB2	1.440000057	-58.417778	3.316468477	-9.14354897	0.044096887	-5.78045225	-8.43031883
F680	COMB2	2.880000114	-55.1518517	3.316468477	-9.14354897	0.044096887	7.386266232	-13.2060366
F680	COMB3	0	-59.6196404	0.434997022	-8.6730051	0.108953737	-18.8487492	-7.44084597
F680	COMB3	1.440000057	-56.3537178	0.434997022	-8.6730051	0.108953737	-6.35961437	-8.06724167

F680	COMB3	2.880000114	-53.0877953	0.434997022	-8.6730051	0.108953737	6.129520416	-8.69363785
F681	D	0	-56.5395432	0.877755642	-8.25196648	-0.02948833	-16.6566696	8.878864288
F681	D	1.440000057	-53.429142	0.877755642	-8.25196648	-0.02948833	-4.77382946	7.614895344
F681	D	2.880000114	-50.318737	0.877755642	-8.25196648	-0.02948833	7.109009266	6.350926399
F681	L	0	-0.55284178	-0.49521032	-2.87720275	0.013725643	-6.48996687	-1.00607777
F681	L	1.440000057	-0.55284178	-0.49521032	-2.87720275	0.013725643	-2.34679222	-0.2929745
F681	L	2.880000114	-0.55284178	-0.49521032	-2.87720275	0.013725643	1.796382666	0.420128822
F681	EX	0	2.26680994	3.7498281	0.014386751	-0.00013993	0.03118043	4.822182178
F681	EX	1.440000057	2.26680994	3.7498281	0.014386751	-0.00013993	0.010463496	-0.57757372
F681	EX	2.880000114	2.26680994	3.7498281	0.014386751	-0.00013993	-0.01025344	-5.97732973
F681	EY	0	0.580478251	0.080141038	0.622618079	-0.08683923	0.096896514	0.14709349
F681	EY	1.440000057	0.580478251	0.080141038	0.622618079	-0.08683923	-0.79967403	0.031690322
F681	EY	2.880000114	0.580478251	0.080141038	0.622618079	-0.08683923	-1.69624472	-0.08371285
F681	COMB1	0	-68.7320023	0.260970235	-14.5058842	-0.01342497	-30.3719501	9.044912338
F681	COMB1	1.440000057	-64.9995193	0.260970235	-14.5058842	-0.01342497	-9.48346329	8.669115067
F681	COMB1	2.880000114	-61.2670326	0.260970235	-14.5058842	-0.01342497	11.40502357	8.293317795
F681	COMB2	0	-57.0116692	4.67196846	-9.35986805	-0.05413835	-19.4710484	14.04318619
F681	COMB2	1.440000057	-53.7457466	4.67196846	-9.35986805	-0.05413835	-5.99282837	7.315546989
F681	COMB2	2.880000114	-50.4798203	4.67196846	-9.35986805	-0.05413835	7.48539114	0.587907612
F681	COMB3	0	-58.2171211	2.030996084	-8.91260242	-0.11786444	-19.4222794	10.67932892
F681	COMB3	1.440000057	-54.9511948	2.030996084	-8.91260242	-0.11786444	-6.58812237	7.754692554
F681	COMB3	2.880000114	-51.6852722	2.030996084	-8.91260242	-0.11786444	6.246033669	4.83005619
F682	D	0	-40.3407326	20.73395157	-8.04335976	0.087720096	-16.0697803	31.30151367
F682	D	1.440000057	-37.2303276	20.73395157	-8.04335976	0.087720096	-4.48733425	1.444604516
F682	D	2.880000114	-34.1199265	20.73395157	-8.04335976	0.087720096	7.09511137	-28.4123039
F682	L	0	-0.26237899	0.44566223	-2.10110545	0.01687743	-4.79131174	1.205768704
F682	L	1.440000057	-0.26237899	0.44566223	-2.10110545	0.01687743	-1.76571798	0.564014614
F682	L	2.880000114	-0.26237899	0.44566223	-2.10110545	0.01687743	1.259876013	-0.07773937
F682	EX	0	-2.27527785	2.58749032	-0.04092158	0.07928706	-0.08042476	2.086370468
F682	EX	1.440000057	-2.27527785	2.58749032	-0.04092158	0.07928706	-0.02149764	-1.63961816
F682	EX	2.880000114	-2.27527785	2.58749032	-0.04092158	0.07928706	0.037429467	-5.36560678
F682	EY	0	0.467069656	0.039162703	0.431320846	0.025693424	-0.23700269	0.052711718
F682	EY	1.440000057	0.467069656	0.039162703	0.431320846	0.025693424	-0.85810512	-0.0036826
F682	EY	2.880000114	0.467069656	0.039162703	0.431320846	0.025693424	-1.47920763	-0.06007693
F682	COMB1	0	-48.8286858	25.59379959	-13.0138006	0.132268012	-26.9498348	39.49104691
F682	COMB1	1.440000057	-45.096199	25.59379959	-13.0138006	0.132268012	-8.20994949	2.635948896
F682	COMB1	2.880000114	-41.3637161	25.59379959	-13.0138006	0.132268012	10.52993584	[illegible]4.2191467
F682	COMB2	0	-44.648201	24.60142136	-9.01386356	0.187578037	-18.5404282	[illegible]42240524
F682	COMB2	1.440000057	-41.3822784	24.60142136	-9.01386356	0.187578037	-5.56045532	[illegible]00366547
F682	COMB2	2.880000114	-38.1163559	24.60142136	-9.01386356	0.187578037	7.41951704	[illegible]5.4297333
F682	COMB3	0	-42.6667061	22.76721191	-8.66737938	0.14937602	-18.6567192	[illegible]3.95896149
F682	COMB3	1.440000057	-39.4007835	22.76721191	-8.66737938	0.14937602	-6.17568445	1.17415297
F682	COMB3	2.880000114	-36.134861	22.76721191	-8.66737938	0.14937602	6.305350304	-31.6106548
F683	D	0	-43.9841766	-20.0963039	0.12216565	-0.08121116	0.809815347	-29.9203053
F683	D	1.440000057	-40.8737755	-20.0963039	0.12216565	-0.08121116	0.633896708	-0.98160923
F683	D	2.880000114	-37.7633705	-20.0963039	0.12216565	-0.08121116	0.45797804	27.95708656
F683	L	0	0.292609453	-0.84812075	-0.03958443	-0.01426271	0.088255301	-2.2112875
F683	L	1.440000057	0.292609453	-0.84812075	-0.03958443	-0.01426271	0.145256907	-0.9899928
F683	L	2.880000114	0.292609453	-0.84812075	-0.03958443	-0.01426271	0.202258542	0.231301859
F683	EX	0	2.152263641	2.328301191	0.01362936	0.065692052	0.007946868	1.691695333
F683	EX	1.440000057	2.152263641	2.328301191	0.01362936	0.065692052	-0.01167942	-1.66106081
F683	EX	2.880000114	2.152263641	2.328301191	0.01362936	0.065692052	-0.03130571	-5.01381683
F683	EY	0	0.101331495	0.0008704	2.047054768	-0.04236027	2.65129137	-0.00262545
F683	EY	1.440000057	0.101331495	0.0008704	2.047054768	-0.04236027	-0.29646939	-0.00387883
F683	EY	2.880000114	0.101331495	0.0008704	2.047054768	-0.04236027	-3.24423027	-0.0051322
F683	COMB1	0	-52.3128395	-25.4725571	0.083263695	-0.12027373	1.112986922	-39.4424248
F683	COMB1	1.440000057	-48.5803566	-25.4725571	0.083263695	-0.12027373	0.993087053	-2.7619195
F683	COMB1	2.880000114	-44.8478699	-25.4725571	0.083263695	-0.12027373	0.873187304	33.91858673
F683	COMB2	0	-43.8317032	-18.9582119	0.774733484	-0.03511669	1.721488357	-30.3627968
F683	COMB2	1.440000057	-40.5657806	-18.9582119	0.774733484	-0.03511669	0.605871379	-3.06295729
F683	COMB2	2.880000114	-37.2998543	-18.9582119	0.774733484	-0.03511669	-0.5097456	24.23688316
F683	COMB3	0	-45.3068542	-20.6339493	2.269505739	-0.11354976	3.664465666	-31.5827484
F683	COMB3	1.440000057	-42.0409317	-20.6339493	2.269505739	-0.11354976	0.396375567	-1.86984432
F683	COMB3	2.880000114	-38.7750053	-20.6339493	2.269505739	-0.11354976	-2.87171483	27.84305954
F684	D	0	-60.4544411	-0.14518623	0.199595243	-0.00324099	1.075469136	-7.32306671
F684	D	1.440000057	-57.3440437	-0.14518623	0.199595243	-0.00324099	0.788051844	-7.11399841
F684	D	2.880000114	-54.2336388	-0.14518623	0.199595243	-0.00324099	0.500634491	-6.90493011
F684	L	0	0.38186425	0.776621342	-0.12714554	-0.01604326	0.079891242	1.579992175
F684	L	1.440000057	0.38186425	0.776621342	-0.12714554	-0.01604326	0.262980938	0.46165669
F684	L	2.880000114	0.38186425	0.776621342	-0.12714554	-0.01604326	0.446070641	-0.6566788
F684	EX	0	-2.1618073	3.661094904	-0.01216117	0.016913356	-0.01829766	4.765701294
F684	EX	1.440000057	-2.1618073	3.661094904	-0.01216117	0.016913356	-0.00078557	-0.5062784
F684	EX	2.880000114	-2.1618073	3.661094904	-0.01216117	0.016913356	0.016726524	-5.77825832
F684	EY	0	0.085976742	-0.00095207	2.298192263	0.059601393	3.059211969	-0.00752783
F684	EY	1.440000057	0.085976742	-0.00095207	2.298192263	0.059601393	-0.25018683	-0.00615685
F684	EY	2.880000114	0.085976742	-0.00095207	2.298192263	0.059601393	-3.55958581	-0.00478588
F684	COMB1	0	-71.9343491	1.0683707	0.036081418	-0.0295584	1.418388963	-6.25969267
F684	COMB1	1.440000057	-68.2018661	1.0683707	0.036081418	-0.0295584	1.366431713	-7.79814768
F684	COMB1	2.880000114	-64.4693832	1.0683707	0.036081418	-0.0295584	1.314474463	-9.33660221
F684	COMB2	0	-65.5672684	3.881123543	0.880867898	0.027823098	2.099122047	-2.26139307
F684	COMB2	1.440000057	-62.3013458	3.881123543	0.880867898	0.027823098	0.830671549	-7.850214
F684	COMB2	2.880000114	-59.0354233	3.881123543	0.880867898	0.027823098	-0.43777907	-13.4390354
F684	COMB3	0	-63.9475708	1.24443543	2.578795195	0.059452504	4.360817432	-5.69823122
F684	COMB3	1.440000057	-60.6816521	1.24443543	2.578795195	0.059452504	0.647349834	-7.49021912

F684	COMB3	2.880000114	-57.4157295	1.24443543	2.578795195	0.059452504	-3.06611776	-9.28220749
F685	D	0	-60.4810257	0.17886278	0.196869299	-0.00270881	1.084905863	7.471874237
F685	D	1.440000057	-57.3706207	0.17886278	0.196869299	-0.00270881	0.801413834	7.214311123
F685	D	2.880000114	-54.2602196	0.17886278	0.196869299	-0.00270881	0.517921865	6.956748486
F685	L	0	0.517306447	-0.80486196	-0.1557156	0.012565185	0.131787777	-1.65590751
F685	L	1.440000057	0.517306447	-0.80486196	-0.1557156	0.012565185	0.356018394	-0.49690551
F685	L	2.880000114	0.517306447	-0.80486196	-0.1557156	0.012565185	0.580249012	0.6620965
F685	EX	0	2.149589777	3.575691938	0.009646022	0.009743538	0.01414041	4.624258518
F685	EX	1.440000057	2.149589777	3.575691938	0.009646022	0.009743538	0.000250129	-0.52474147
F685	EX	2.880000114	2.149589777	3.575691938	0.009646022	0.009743538	-0.01364015	-5.67374086
F685	EY	0	0.085976765	0.000952148	2.298191786	-0.05960133	3.059211493	0.007528034
F685	EY	1.440000057	0.085976765	0.000952148	2.298191786	-0.05960133	-0.25018674	0.006156939
F685	EY	2.880000114	0.085976765	0.000952148	2.298191786	-0.05960133	-3.55958509	0.004785845
F685	COMB1	0	-71.7495422	-1.07314384	-0.01290179	0.016853726	1.512747526	6.31679678
F685	COMB1	1.440000057	-68.0170517	-1.07314384	-0.01290179	0.016853726	1.531326056	7.862124443
F685	COMB1	2.880000114	-64.2845688	-1.07314384	-0.01290179	0.016853726	1.549904585	9.407452583
F685	COMB2	0	-61.0902176	3.635415316	0.891576409	-0.00757607	2.158951283	12.11233521
F685	COMB2	1.440000057	-57.8242912	3.635415316	0.891576409	-0.00757607	0.875080407	6.877333641
F685	COMB2	2.880000114	-54.5583687	3.635415316	0.891576409	-0.00757607	-0.40879047	1.642331839
F685	COMB3	0	-62.5747261	1.061617136	2.573802233	-0.05839839	4.397290707	8.788402557
F685	COMB3	1.440000057	-59.3088036	1.061617136	2.573802233	-0.05839839	0.691013038	7.259672642
F685	COMB3	2.880000114	-56.042881	1.061617136	2.573802233	-0.05839839	-3.01526451	5.730943203
F686	D	0	-43.7534866	20.03118706	0.086968645	0.076978087	0.884854794	29.83851433
F686	D	1.440000057	-40.6430817	20.03118706	0.086968645	0.076978087	0.759619832	0.993587017
F686	D	2.880000114	-37.5326805	20.03118706	0.086968645	0.076978087	0.634384871	-27.8513412
F686	L	0	0.503960013	0.855466425	-0.07833409	0.01317096	0.173663497	2.218314886
F686	L	1.440000057	0.503960013	0.855466425	-0.07833409	0.01317096	0.286464661	0.986442506
F686	L	2.880000114	0.503960013	0.855466425	-0.07833409	0.01317096	0.399265826	-0.24543005
F686	EX	0	-2.13996744	2.387300253	-0.01190493	0.060763229	-0.00545946	1.822882652
F686	EX	1.440000057	-2.13996744	2.387300253	-0.01190493	0.060763229	0.011683659	-1.61483192
F686	EX	2.880000114	-2.13996744	2.387300253	-0.01190493	0.060763229	0.028826773	-5.0525465
F686	EY	0	0.101331487	-0.00087023	2.047055483	0.042360529	2.651292086	0.002625851
F686	EY	1.440000057	0.101331487	-0.00087023	2.047055483	0.042360529	-0.29646954	0.003878985
F686	EY	2.880000114	0.101331487	-0.00087023	2.047055483	0.042360529	-3.24423122	0.005132118
F686	COMB1	0	-51.6978455	25.40616989	-0.02097218	0.113447234	1.339687347	39.35552216
F686	COMB1	1.440000057	-47.9653625	25.40616989	-0.02097218	0.113447234	1.369887233	2.770612478
F686	COMB1	2.880000114	-44.2328796	25.40616989	-0.02097218	0.113447234	1.400087237	-33.8142967
F686	COMB2	0	-47.9653587	23.77280045	0.699142694	0.161209345	1.813308001	33.91672134
F686	COMB2	1.440000057	-44.6994362	23.77280045	0.699142694	0.161209345	0.80654186	[illegible]31613335
F686	COMB2	2.880000114	-41.4335136	23.77280045	0.699142694	0.161209345	-0.20022424	[illegible]5489883
F686	COMB3	0	-46.3501053	22.05330467	2.212299824	0.148594812	3.76593852	[illegible]0617447
F686	COMB3	1.440000057	-43.0841789	22.05330467	2.212299824	0.148594812	0.580224514	0.849396646
F686	COMB3	2.880000114	-39.8182564	22.05330467	2.212299824	0.148594812	-2.60548949	-30.9073811
F687	D	0	-44.7657356	-20.0922489	0.078025483	0.089373685	0.011620412	-29.9401588
F687	D	1.440000057	-41.6553383	-20.0922489	0.078025483	0.089373685	-0.10073636	-1.00729978
F687	D	2.880000114	-38.5449333	-20.0922489	0.078025483	0.089373685	-0.21309315	27.92555809
F687	L	0	0.051149856	-0.82985705	0.039653011	-0.00018893	0.034161367	-2.20422053
F687	L	1.440000057	0.051149856	-0.82985705	0.039653011	-0.00018893	-0.02293901	-1.00922549
F687	L	2.880000114	0.051149856	-0.82985705	0.039653011	-0.00018893	-0.08003937	0.185769424
F687	EX	0	2.125469685	2.298036098	0.016476532	-0.01565392	0.018549385	1.698796272
F687	EX	1.440000057	2.125469685	2.298036098	0.016476532	-0.01565392	-0.00517684	-1.61037791
F687	EX	2.880000114	2.125469685	2.298036098	0.016476532	-0.01565392	-0.02890306	-4.91955233
F687	EY	0	0.013905018	0.000858208	2.256991386	-0.03543565	2.922528744	-0.00061282
F687	EY	1.440000057	0.013905018	0.000858208	2.256991386	-0.03543565	-0.32754087	-0.00184864
F687	EY	2.880000114	0.013905018	0.000858208	2.256991386	-0.03543565	-3.57761049	-0.00308446
F687	COMB1	0	-53.637043	-25.4384689	0.157075405	0.106946133	0.068602681	-39.4549408
F687	COMB1	1.440000057	-49.9045639	-25.4384689	0.157075405	0.106946133	-0.15758605	-2.82352066
F687	COMB1	2.880000114	-46.172081	-25.4384689	0.157075405	0.106946133	-0.38377479	33.80789948
F687	COMB2	0	-44.7836685	-18.9795284	0.822422981	0.066418819	0.962757409	-30.3734341
F687	COMB2	1.440000057	-41.5177498	-18.9795284	0.822422981	0.066418819	-0.22153237	-3.04289436
F687	COMB2	2.880000114	-38.2518272	-18.9795284	0.822422981	0.066418819	-1.40582216	24.28764343
F687	COMB3	0	-46.3037872	-20.6334839	2.469448566	0.051644437	3.097460508	-31.5970173
F687	COMB3	1.440000057	-43.0378685	-20.6334839	2.469448566	0.051644437	-0.45854759	-1.884781
F687	COMB3	2.880000114	-39.771946	-20.6334839	2.469448566	0.051644437	-4.01455545	27.82745552
F688	D	0	-61.4439468	-0.11978436	0.104582414	0.006961139	0.03401807	-7.28332663
F688	D	1.440000057	-58.3335419	-0.11978436	0.104582414	0.006961139	-0.11658069	-7.11083698
F688	D	2.880000114	-55.2231407	-0.11978436	0.104582414	0.006961139	-0.26717946	-6.93834782
F688	L	0	-0.1934687	0.818123519	0.07810133	0.001392656	0.078132629	1.651749969
F688	L	1.440000057	-0.1934687	0.818123519	0.07810133	0.001392656	-0.03433337	0.47365135
F688	L	2.880000114	-0.1934687	0.818123519	0.07810133	0.001392656	-0.14679937	-0.70444733
F688	EX	0	-2.12847877	3.611896753	-0.03279098	-0.0080023	-0.05327627	4.728644848
F688	EX	1.440000057	-2.12847877	3.611896753	-0.03279098	-0.0080023	-0.00605721	-0.47249016
F688	EX	2.880000114	-2.12847877	3.611896753	-0.03279098	-0.0080023	0.041161839	-5.67362452
F688	EY	0	0.012466691	0.001692837	2.495691061	0.060042255	3.312224865	0.001259235
F688	EY	1.440000057	0.012466691	0.001692837	2.495691061	0.060042255	-0.28157267	-0.00117845
F688	EY	2.880000114	0.012466691	0.001692837	2.495691061	0.060042255	-3.8753705	-0.00361614
F688	COMB1	0	-74.0422897	1.165256381	0.250461012	0.010581615	0.16583389	-6.09719229
F688	COMB1	1.440000057	-70.3097992	1.165256381	0.250461012	0.010581615	-0.19483022	-7.7751627
F688	COMB1	2.880000114	-66.5773163	1.165256381	0.250461012	0.010581615	-0.55549431	-9.45313263
F688	COMB2	0	-66.7761383	3.87078166	0.886617482	0.018378815	1.048540711	-2.2326479
F688	COMB2	1.440000057	-63.5102119	3.87078166	0.886617482	0.018378815	-0.22818935	-7.80657721
F688	COMB2	2.880000114	-60.2442894	3.87078166	0.886617482	0.018378815	-1.50491941	-13.3805065
F688	COMB3	0	-65.2344666	1.271460295	2.744560003	0.068271525	3.521384954	-5.63634634
F688	COMB3	1.440000057	-61.968544	1.271460295	2.744560003	0.068271525	-0.43078408	-7.46725082

F688	COMB3	2.880000114	-58.7026215	1.271460295	2.744560003	0.068271525	-4.38295317	-9.29815483
F689	D	0	-61.470726	0.169135466	0.10647285	-0.0061925	0.033854328	7.454357147
F689	D	1.440000057	-58.3603249	0.169135466	0.10647285	-0.0061925	-0.11946666	7.210802078
F689	D	2.880000114	-55.2499199	0.169135466	0.10647285	-0.0061925	-0.27278766	6.967247009
F689	L	0	-0.21791038	-0.83573657	0.088405482	-0.00138893	0.077159986	-1.71153712
F689	L	1.440000057	-0.21791038	-0.83573657	0.088405482	-0.00138893	-0.05014399	-0.50807565
F689	L	2.880000114	-0.21791038	-0.83573657	0.088405482	-0.00138893	-0.17744797	0.695385814
F689	EX	0	2.124891996	3.53882432	0.03114864	-0.00972592	0.050632894	4.598151684
F689	EX	1.440000057	2.124891996	3.53882432	0.03114864	-0.00972592	0.005778822	-0.49775881
F689	EX	2.880000114	2.124891996	3.53882432	0.03114864	-0.00972592	-0.03907525	-5.59366941
F689	EY	0	0.012466592	-0.00169302	2.495690823	-0.06004227	3.312224627	-0.00125952
F689	EY	1.440000057	0.012466592	-0.00169302	2.495690823	-0.06004227	-0.28157255	0.001178435
F689	EY	2.880000114	0.012466592	-0.00169302	2.495690823	-0.06004227	-3.87536955	0.003616387
F689	COMB1	0	-74.113533	-1.13421595	0.26921618	-0.00965329	0.164081171	6.206769466
F689	COMB1	1.440000057	-70.3810425	-1.13421595	0.26921618	-0.00965329	-0.22359037	7.840041161
F689	COMB1	2.880000114	-66.6485596	-1.13421595	0.26921618	-0.00965329	-0.61126196	9.473313332
F689	COMB2	0	-62.4097137	3.576485157	0.958025694	-0.03591928	1.155608177	12.04663086
F689	COMB2	1.440000057	-59.1437912	3.576485157	0.958025694	-0.03591928	-0.22394963	6.896489143
F689	COMB2	2.880000114	-55.8778687	3.576485157	0.958025694	-0.03591928	-1.6035074	1.746347189
F689	COMB3	0	-63.9304733	1.027287245	2.769931316	-0.07304769	3.553637505	8.735035896
F689	COMB3	1.440000057	-60.6645508	1.027287245	2.769931316	-0.07304769	-0.43506622	7.255741596
F689	COMB3	2.880000114	-57.3986282	1.027287245	2.769931316	-0.07304769	-4.42376995	5.776447296
F690	D	0	-44.7861404	20.04052734	0.089618616	-0.08830819	0.008027467	29.87481499
F690	D	1.440000057	-41.6757393	20.04052734	0.089618616	-0.08830819	-0.12102342	1.016433597
F690	D	2.880000114	-38.5653381	20.04052734	0.089618616	-0.08830819	-0.25007433	-27.8419456
F690	L	0	-0.00386719	0.843344092	0.052837759	0.00051785	0.029789513	2.217443943
F690	L	1.440000057	-0.00386719	0.843344092	0.052837759	0.00051785	-0.04629691	1.003027439
F690	L	2.880000114	-0.00386719	0.843344092	0.052837759	0.00051785	-0.12238334	-0.21138881
F690	EX	0	-2.12135363	2.374727011	-0.01414977	-0.01361248	-0.01501957	1.853766084
F690	EX	1.440000057	-2.12135363	2.374727011	-0.01414977	-0.01361248	0.005356106	-1.56584299
F690	EX	2.880000114	-2.12135363	2.374727011	-0.01414977	-0.01361248	0.02573178	-4.98545218
F690	EY	0	0.013905101	-0.00085837	2.256991863	0.035435811	2.922529221	0.000612591
F690	EY	1.440000057	0.013905101	-0.00085837	2.256991863	0.035435811	-0.32754102	0.001848643
F690	EY	2.880000114	0.013905101	-0.00085837	2.256991863	0.035435811	-3.57761145	0.003084696
F690	COMB1	0	-53.7495575	25.39798355	0.192082763	-0.10514127	0.057296183	39.397686
F690	COMB1	1.440000057	-50.0170708	25.39798355	0.192082763	-0.10514127	-0.21930316	2.824564219
F690	COMB1	2.880000114	-46.2845955	25.39798355	0.192082763	-0.10514127	-0.49590254	-33.748558
F690	COMB2	0	-49.2178879	23.7657795	0.807050884	-0.09548712	0.92286402	33.98588943
F690	COMB2	1.440000057	-45.9519653	23.7657795	0.807050884	-0.09548712	-0.23928997	-0.23685622
F690	COMB2	2.880000114	-42.6860428	23.7657795	0.807050884	-0.09548712	-1.40144396	-34.4596024
F690	COMB3	0	-47.6802902	22.05534554	2.476127863	-0.05964081	3.08173728	32.6516304
F690	COMB3	1.440000057	-44.4143677	22.05534554	2.476127863	-0.05964081	-0.48388901	0.89190948
F690	COMB3	2.880000114	-41.1484489	22.05534554	2.476127863	-0.05964081	-4.04951525	-30.8678093
F691	D	0	-44.7090721	-21.2226563	-0.00836736	0.026524438	-0.01525151	-32.5288773
F691	D	1.440000057	-41.598671	-21.2226563	-0.00836736	0.026524438	-0.0032025	-1.96823144
F691	D	2.880000114	-38.488266	-21.2226563	-0.00836736	0.026524438	0.008846499	28.59241104
F691	L	0	0.128521651	-0.88485652	0.021527445	-0.0050858	0.031082276	-2.34757257
F691	L	1.440000057	0.128521651	-0.88485652	0.021527445	-0.0050858	8.27334E-05	-1.07337832
F691	L	2.880000114	0.128521651	-0.88485652	0.021527445	-0.0050858	-0.03091681	0.200815856
F691	EX	0	2.175149441	2.376095057	0.022169266	-0.07423761	0.027249688	1.862897754
F691	EX	1.440000057	2.175149441	2.376095057	0.022169266	-0.07423761	-0.00467407	-1.55868137
F691	EX	2.880000114	2.175149441	2.376095057	0.022169266	-0.07423761	-0.03659784	-4.98026037
F691	EY	0	0.031832606	0.002488697	2.400718212	-0.03641774	3.17376852	0.003925351
F691	EY	1.440000057	0.031832606	0.002488697	2.400718212	-0.03641774	-0.28326806	0.000341624
F691	EY	2.880000114	0.031832606	0.002488697	2.400718212	-0.03641774	-3.74030495	-0.0032421
F691	COMB1	0	-53.4452553	-26.8829575	0.024403084	0.023692053	0.031429835	-42.7907677
F691	COMB1	1.440000057	-49.7127686	-26.8829575	0.024403084	0.023692053	-0.00371063	-4.07928324
F691	COMB1	2.880000114	-45.9802856	-26.8829575	0.024403084	0.023692053	-0.03885109	34.63219833
F691	COMB2	0	-44.6427345	-20.1024761	0.777166843	-0.06205888	1.02171731	-32.9654694
F691	COMB2	1.440000057	-41.376812	-20.1024761	0.777166843	-0.06205888	-0.09740368	-4.01788473
F691	COMB2	2.880000114	-38.1108894	-20.1024761	0.777166843	-0.06205888	-1.21652472	24.92969894
F691	COMB3	0	-46.1854477	-21.8114357	2.525732994	-0.03537484	3.33481741	-34.3038712
F691	COMB3	1.440000057	-42.9195213	-21.8114357	2.525732994	-0.03537484	-0.30224037	-2.89538312
F691	COMB3	2.880000114	-39.6535988	-21.8114357	2.525732994	-0.03537484	-3.93929839	28.51310349
F692	D	0	-60.9849892	-0.51910228	0.058158137	-0.04080412	0.114413723	-8.12506485
F692	D	1.440000057	-57.8745842	-0.51910228	0.058158137	-0.04080412	0.030665951	-7.37755775
F692	D	2.880000114	-54.764183	-0.51910228	0.058158137	-0.04080412	-0.05308182	-6.63004971
F692	L	0	-0.08780426	0.89679873	0.055356055	-0.00258616	0.091599345	1.820858598
F692	L	1.440000057	-0.08780426	0.89679873	0.055356055	-0.00258616	0.011886576	0.529467642
F692	L	2.880000114	-0.08780426	0.89679873	0.055356055	-0.00258616	-0.0678262	-0.76192349
F692	EX	0	-2.16780519	3.797756195	-0.03178419	-0.03873766	-0.05340359	5.026895523
F692	EX	1.440000057	-2.16780519	3.797756195	-0.03178419	-0.03873766	-0.00763433	-0.44187695
F692	EX	2.880000114	-2.16780519	3.797756195	-0.03178419	-0.03873766	0.038134929	-5.91064978
F692	EY	0	0.029450092	0.002334198	2.642465591	0.060096074	3.569430828	0.003428861
F692	EY	1.440000057	0.029450092	0.002334198	2.642465591	0.060096074	-0.2357225	6.76136E-05
F692	EY	2.880000114	0.029450092	0.002334198	2.642465591	0.060096074	-4.04087543	-0.00329363
F692	COMB1	0	-73.3224716	0.811955273	0.158359453	-0.05310281	0.283855408	-6.83670425
F692	COMB1	1.440000057	-69.5899887	0.811955273	0.158359453	-0.05310281	0.055817664	-8.00592136
F692	COMB1	2.880000114	-65.8575058	0.811955273	0.158359453	-0.05310281	-0.1722201	-9.17513752
F692	COMB2	0	-66.2962952	3.668847084	0.877983272	-0.06482218	1.218086123	-2.75383091
F692	COMB2	1.440000057	-63.0303726	3.668847084	0.877983272	-0.06482218	-0.04621059	-8.03697491
F692	COMB2	2.880000114	-59.7644501	3.668847084	0.877983272	-0.06482218	-1.3105073	-13.320118
F692	COMB3	0	-64.713829	0.936178327	2.843080282	0.007239548	3.880068302	-6.37067556
F692	COMB3	1.440000057	-61.4479065	0.936178327	2.843080282	0.007239548	-0.21396992	-7.71877337

F692	COMB3	2.880000114	-58.1819839	0.936178327	2.843080282	0.007239548	-4.30800819	-9.06687164
F693	D	0	-61.006012	0.568009496	0.058445547	0.040869955	0.114817046	8.295833588
F693	D	1.440000057	-57.8956108	0.568009496	0.058445547	0.040869955	0.030655412	7.477898598
F693	D	2.880000114	-54.7852058	0.568009496	0.058445547	0.040869955	-0.05350623	6.659965038
F693	L	0	-0.07054866	-0.91892457	0.058334347	0.002624769	0.097457319	-1.89150906
F693	L	1.440000057	-0.07054866	-0.91892457	0.058334347	0.002624769	0.013455804	-0.56825674
F693	L	2.880000114	-0.07054866	-0.91892457	0.058334347	0.002624769	-0.07054571	0.754995525
F693	EX	0	2.160532475	3.629926205	0.031778876	0.015947614	0.053569388	4.744148254
F693	EX	1.440000057	2.160532475	3.629926205	0.031778876	0.015947614	0.007807778	-0.48294872
F693	EX	2.880000114	2.160532475	3.629926205	0.031778876	0.015947614	-0.03795383	-5.71004581
F693	EY	0	0.029449955	-0.00233448	2.642465353	-0.06009616	3.569430113	-0.00342933
F693	EY	1.440000057	0.029449955	-0.00233448	2.642465353	-0.06009616	-0.23572241	-6.7683E-05
F693	EY	2.880000114	0.029449955	-0.00233448	2.642465353	-0.06009616	-4.04087496	0.003293968
F693	COMB1	0	-73.3200912	-0.78866786	0.163469613	0.053243577	0.293712169	6.928586006
F693	COMB1	1.440000057	-69.5876083	-0.78866786	0.163469613	0.053243577	0.05831578	8.064268112
F693	COMB1	2.880000114	-65.8551254	-0.78866786	0.163469613	0.053243577	-0.1770806	9.199951172
F693	COMB2	0	-61.833107	4.063187122	0.9450109	0.041315749	1.331071734	13.02391338
F693	COMB2	1.440000057	-58.5671844	4.063187122	0.9450109	0.041315749	-0.02974475	7.17291975
F693	COMB2	2.880000114	-55.3012619	4.063187122	0.9450109	0.041315749	-1.39056134	1.32192719
F693	COMB3	0	-63.3670464	1.447924256	2.864342213	-0.01433721	3.916032791	9.605606079
F693	COMB3	1.440000057	-60.1011238	1.447924256	2.864342213	-0.01433721	-0.20862232	7.52059269
F693	COMB3	2.880000114	-56.8351974	1.447924256	2.864342213	-0.01433721	-4.3332777	5.435581207
F694	D	0	-44.6733704	21.17246819	-0.00840584	-0.0267646	-0.01526539	32.46793747
F694	D	1.440000057	-41.5629692	21.17246819	-0.00840584	-0.0267646	-0.00316098	1.97956574
F694	D	2.880000114	-38.4525681	21.17246819	-0.00840584	-0.0267646	0.008943438	-28.5088081
F694	L	0	0.135919973	0.907480776	0.021506041	0.004593655	0.030970383	2.38190627
F694	L	1.440000057	0.135919973	0.907480776	0.021506041	0.004593655	1.66481E-06	1.075132847
F694	L	2.880000114	0.135919973	0.907480776	0.021506041	0.004593655	-0.03096705	-0.23164025
F694	EX	0	-2.16804123	2.549367666	-0.02020582	0.001798071	-0.02431398	2.202799082
F694	EX	1.440000057	-2.16804123	2.549367666	-0.02020582	0.001798071	0.004782411	-1.46829283
F694	EX	2.880000114	-2.16804123	2.549367666	-0.02020582	0.001798071	0.033878807	-5.13938427
F694	EY	0	0.031832732	-0.00248898	2.400718927	0.036417522	3.173769236	-0.00392582
F694	EY	1.440000057	0.031832732	-0.00248898	2.400718927	0.036417522	-0.28326821	-0.0003417
F694	EY	2.880000114	0.031832732	-0.00248898	2.400718927	0.036417522	-3.74030519	0.003242431
F694	COMB1	0	-53.3905754	26.8589325	0.024322663	-0.02476767	0.031234143	42.77257538
F694	COMB1	1.440000057	-49.6580887	26.8589325	0.024322663	-0.02476767	-0.00379051	4.095691681
F694	COMB1	2.880000114	-45.9256096	26.8589325	0.024322663	-0.02476767	-0.03881516	-34.581192
F694	COMB2	0	-49.0981216	25.15476036	0.733261704	-0.0133233	0.968299329	37.12029648
F694	COMB2	1.440000057	-45.8321953	25.15476036	0.733261704	-0.0133233	-0.08759819	0.897420228
F694	COMB2	2.880000114	-42.5662766	25.15476036	0.733261704	-0.0133233	-1.14349556	-35.3254547
F694	COMB3	0	-47.5137329	23.31738663	2.512338161	0.012148962	3.318525791	35.53139496
F694	COMB3	1.440000057	-44.2478104	23.31738663	2.512338161	0.012148962	-0.29924366	1.954339862
F694	COMB3	2.880000114	-40.9818916	23.31738663	2.512338161	0.012148962	-3.91701269	-31.6227169
F695	D	0	-44.7207718	-20.8278408	-0.11028139	0.0177863	-0.06140548	-31.9825363
F695	D	1.440000057	-41.6103706	-20.8278408	-0.11028139	0.0177863	0.097399831	-1.99042666
F695	D	2.880000114	-38.4999695	-20.8278408	-0.11028139	0.0177863	0.256205142	28.00168228
F695	L	0	0.062794283	-0.89784217	0.01220903	-0.00094516	0.044803787	-2.37446666
F695	L	1.440000057	0.062794283	-0.89784217	0.01220903	-0.00094516	0.027222771	-1.08157313
F695	L	2.880000114	0.062794283	-0.89784217	0.01220903	-0.00094516	0.009641756	0.211320385
F695	EX	0	2.170986652	2.37839365	0.024175683	-0.01587612	0.029460026	1.884889007
F695	EX	1.440000057	2.170986652	2.37839365	0.024175683	-0.01587612	-0.00535298	-1.53999996
F695	EX	2.880000114	2.170986652	2.37839365	0.024175683	-0.01587612	-0.04016599	-4.96488905
F695	EY	0	0.040232893	8.87072E-05	2.541919231	-0.03540068	3.3932724	0.000241974
F695	EY	1.440000057	0.040232893	8.87072E-05	2.541919231	-0.03540068	-0.26709366	0.000114236
F695	EY	2.880000114	0.040232893	8.87072E-05	2.541919231	-0.03540068	-3.92745972	-1.3503E-05
F695	COMB1	0	-53.5644569	-26.4299564	-0.11280322	0.019831305	-0.00200051	-42.1781921
F695	COMB1	1.440000057	-49.831974	-26.4299564	-0.11280322	0.019831305	0.160436228	-4.11902905
F695	COMB1	2.880000114	-46.0994949	-26.4299564	-0.11280322	0.019831305	0.322872996	33.94013214
F695	COMB2	0	-44.6773872	-19.6903877	0.713776767	-0.00920511	1.049009442	-32.378685
F695	COMB2	1.440000057	-41.4114647	-19.6903877	0.713776767	-0.00920511	0.021170158	-4.02450752
F695	COMB2	2.880000114	-38.145546	-19.6903877	0.713776767	-0.00920511	-1.00666904	24.32966805
F695	COMB3	0	-46.2109261	-21.4027653	2.564680815	-0.0237938	3.521853447	-33.7356262
F695	COMB3	1.440000057	-42.9450035	-21.4027653	2.564680815	-0.0237938	-0.17128953	-2.91562343
F695	COMB3	2.880000114	-39.6790848	-21.4027653	2.564680815	-0.0237938	-3.86443233	27.90437889
F696	D	0	-61.5332565	0.0130874	-0.07847817	0.012384129	0.02462275	-7.26802015
F696	D	1.440000057	-58.4228554	0.0130874	-0.07847817	0.012384129	0.137631387	-7.28686619
F696	D	2.880000114	-55.3124504	0.0130874	-0.07847817	0.012384129	0.250640035	-7.30571222
F696	L	0	-0.2013706	0.898462355	0.018870652	-0.00016612	0.080298848	1.830146074
F696	L	1.440000057	-0.2013706	0.898462355	0.018870652	-0.00016612	0.053125095	0.536359489
F696	L	2.880000114	-0.2013706	0.898462355	0.018870652	-0.00016612	0.025951337	-0.7574271
F696	EX	0	-2.16788125	3.776603222	-0.01180407	-0.00304646	-0.01971927	5.001424313
F696	EX	1.440000057	-2.16788125	3.776603222	-0.01180407	-0.00304646	-0.0027214	-0.43688768
F696	EX	2.880000114	-2.16788125	3.776603222	-0.01180407	-0.00304646	0.014276481	-5.87519932
F696	EY	0	0.03909982	-0.00046186	2.782629251	0.059950162	3.787528038	-0.00103471
F696	EY	1.440000057	0.03909982	-0.00046186	2.782629251	0.059950162	-0.21946044	-0.00036963
F696	EY	2.880000114	0.03909982	-0.00046186	2.782629251	0.059950162	-4.22644901	0.000295446
F696	COMB1	0	-74.1621017	1.453244567	-0.06398077	0.01459516	0.158025458	-5.79339027
F696	COMB1	1.440000057	-70.4296188	1.453244567	-0.06398077	0.01459516	0.250157833	-7.88606405
F696	COMB1	2.880000114	-66.6971359	1.453244567	-0.06398077	0.01459516	0.342290193	-9.97873783
F696	COMB2	0	-66.9047928	4.205396175	0.787853122	0.028682223	1.223809958	-1.87877691
F696	COMB2	1.440000057	-63.6388702	4.205396175	0.787853122	0.028682223	0.089300685	-7.93455124
F696	COMB2	2.880000114	-60.3729439	4.205396175	0.787853122	0.028682223	-1.04520857	-13.9903259
F696	COMB3	0	-65.3151779	1.485902429	2.841584444	0.074939042	4.021841049	-5.48056269
F696	COMB3	1.440000057	-62.0492554	1.485902429	2.841584444	0.074939042	-0.07004334	-7.62026405

F696	COMB3	2.880000114	-58.7833328	1.485902429	2.841584444	0.074939042	-4.1619277	-9.75996494
F697	D	0	-61.5602684	0.036227025	-0.07996321	-0.01314558	0.02536324	7.439924717
F697	D	1.440000057	-58.4498634	0.036227025	-0.07996321	-0.01314558	0.14051035	7.387757778
F697	D	2.880000114	-55.3394585	0.036227025	-0.07996321	-0.01314558	0.255657464	7.335590839
F697	L	0	-0.22648835	-0.92346686	0.009271249	0.000188431	0.081624702	-1.90662158
F697	L	1.440000057	-0.22648835	-0.92346686	0.009271249	0.000188431	0.068274096	-0.57682842
F697	L	2.880000114	-0.22648835	-0.92346686	0.009271249	0.000188431	0.054923482	0.752964675
F697	EX	0	2.1593225	3.613920927	0.013868584	-0.00435461	0.023017466	4.726004124
F697	EX	1.440000057	2.1593225	3.613920927	0.013868584	-0.00435461	0.003046691	-0.47804505
F697	EX	2.880000114	2.1593225	3.613920927	0.013868584	-0.00435461	-0.01692408	-5.6820941
F697	EY	0	0.039099842	0.000461913	2.782628536	-0.05995015	3.7875278	0.001034776
F697	EY	1.440000057	0.039099842	0.000461913	2.782628536	-0.05995015	-0.21946034	0.00036962
F697	EY	2.880000114	0.039099842	0.000461913	2.782628536	-0.05995015	-4.22644806	-0.00029554
F697	COMB1	0	-74.2347031	-1.43407452	-0.08112186	-0.01547321	0.161035404	5.877315044
F697	COMB1	1.440000057	-70.5022202	-1.43407452	-0.08112186	-0.01547321	0.277850956	7.942383766
F697	COMB1	2.880000114	-66.7697372	-1.43407452	-0.08112186	-0.01547321	0.394666523	10.00745296
F697	COMB2	0	-62.46241	3.487699747	0.809841096	-0.03713482	1.269237518	12.10307598
F697	COMB2	1.440000057	-59.1964836	3.487699747	0.809841096	-0.03713482	0.103065521	7.080784798
F697	COMB2	2.880000114	-55.9305611	3.487699747	0.809841096	-0.03713482	-1.06310642	2.058493853
F697	COMB3	0	-63.9883842	0.886016369	2.845087767	-0.07806286	4.036497593	8.701112747
F697	COMB3	1.440000057	-60.7224579	0.886016369	2.845087767	-0.07806286	-0.06043144	7.425248623
F697	COMB3	2.880000114	-57.4565353	0.886016369	2.845087767	-0.07806286	-4.15736055	6.149384499
F698	D	0	-44.7410965	20.77880859	-0.12204351	-0.01913293	-0.05798764	31.92454147
F698	D	1.440000057	-41.6306992	20.77880859	-0.12204351	-0.01913293	0.117755115	2.003034115
F698	D	2.880000114	-38.5202942	20.77880859	-0.12204351	-0.01913293	0.29349786	-27.9184723
F698	L	0	0.007674452	0.922784746	-0.00079153	4.7784E-05	0.049430795	2.415268898
F698	L	1.440000057	0.007674452	0.922784746	-0.00079153	4.7784E-05	0.050570596	1.086458087
F698	L	2.880000114	0.007674452	0.922784746	-0.00079153	4.7784E-05	0.051710397	-0.24235275
F698	EX	0	-2.1625917	2.54376173	-0.02556229	-0.01469255	-0.0319936	2.211936235
F698	EX	1.440000057	-2.1625917	2.54376173	-0.02556229	-0.01469255	0.004816117	-1.45108271
F698	EX	2.880000114	-2.1625917	2.54376173	-0.02556229	-0.01469255	0.041625831	-5.11410189
F698	EY	0	0.040232871	-8.867E-05	2.541919708	0.03540054	3.393272877	-0.00024195
F698	EY	1.440000057	0.040232871	-8.867E-05	2.541919708	0.03540054	-0.26709384	-0.00011426
F698	EY	2.880000114	0.040232871	-8.867E-05	2.541919708	0.03540054	-3.92746067	1.34229E-05
F698	COMB1	0	-53.6770363	26.411026	-0.14771865	-0.02288306	0.009504103	42.17387772
F698	COMB1	1.440000057	-49.9445572	26.411026	-0.14771865	-0.02288306	0.222219095	4.141973972
F698	COMB1	2.880000114	-46.2120743	26.411026	-0.14771865	-0.02288306	0.43493408	-33.8899307
F698	COMB2	0	-49.2013435	24.74119186	0.645852745	-0.02413015	0.990451276	36.57085419
F698	COMB2	1.440000057	-45.9354248	24.74119186	0.645852745	-0.02413015	0.060422733	0.943513572
F698	COMB2	2.880000114	-42.6695023	24.74119186	0.645852745	-0.02413015	-0.86960578	-34.6838264
F698	COMB3	0	-47.6147079	22.90961838	2.532568693	0.012467886	3.507542133	34.97808456
F698	COMB3	1.440000057	-44.3487892	22.90961838	2.532568693	0.012467886	-0.13935883	1.988209128
F698	COMB3	2.880000114	-41.0828629	22.90961838	2.532568693	0.012467886	-3.78625989	-31.0016651
F699	D	0	-43.9312325	-20.8808842	-0.13876118	0.013059121	-0.83913749	-32.0219803
F699	D	1.440000057	-40.8208275	-20.8808842	-0.13876118	0.013059121	-0.63932127	-1.95348859
F699	D	2.880000114	-37.7104301	-20.8808842	-0.13876118	0.013059121	-0.43950504	28.11500359
F699	L	0	0.278312594	-0.91476899	0.037755106	0.009553901	-0.09040657	-2.39325213
F699	L	1.440000057	0.278312594	-0.91476899	0.037755106	0.009553901	-0.14477396	-1.07598388
F699	L	2.880000114	0.278312594	-0.91476899	0.037755106	0.009553901	-0.19914135	0.241284311
F699	EX	0	2.158726454	2.377349854	0.023697661	-0.00134604	0.034954168	1.884767294
F699	EX	1.440000057	2.158726454	2.377349854	0.023697661	-0.00134604	0.000829513	-1.53861868
F699	EX	2.880000114	2.158726454	2.377349854	0.023697661	-0.00134604	-0.03329514	-4.96200466
F699	EY	0	0.014336091	-0.00859332	2.662763596	-0.03618755	3.642884016	-0.0130637
F699	EY	1.440000057	0.014336091	-0.00859332	2.662763596	-0.03618755	-0.19149789	-0.00068932
F699	EY	2.880000114	0.014336091	-0.00859332	2.662763596	-0.03618755	-4.02587986	0.011685061
F699	COMB1	0	-52.2721786	-26.5206909	-0.10610524	0.030957187	-1.1516155	-42.2555809
F699	COMB1	1.440000057	-48.5396957	-26.5206909	-0.10610524	0.030957187	-0.99882388	-4.06576061
F699	COMB1	2.880000114	-44.8072166	-26.5206909	-0.10610524	0.030957187	-0.8460322	34.12405777
F699	COMB2	0	-43.8013268	-19.7552299	0.729491234	0.003929325	0.274113595	-32.430336
F699	COMB2	1.440000057	-40.5354042	-19.7552299	0.729491234	0.003929325	-0.77635443	-3.98278546
F699	COMB2	2.880000114	-37.2694855	-19.7552299	0.729491234	0.003929325	-1.82682252	24.46476364
F699	COMB3	0	-45.3450737	-21.473238	2.669560194	-0.02169937	2.926466227	-33.7969704
F699	COMB3	1.440000057	-42.0791512	-21.473238	2.669560194	-0.02169937	-0.91770262	-2.87548661
F699	COMB3	2.880000114	-38.8132324	-21.473238	2.669560194	-0.02169937	-4.76187181	28.04599571
F700	D	0	-60.4729118	-0.08090279	-0.24372031	0.014266322	-1.16040289	-7.4297533
F700	D	1.440000057	-57.3625107	-0.08090279	-0.24372031	0.014266322	-0.80944544	-7.31325293
F700	D	2.880000114	-54.2521057	-0.08090279	-0.24372031	0.014266322	-0.45848796	-7.19675255
F700	L	0	0.289462626	0.878406525	0.058332026	0.010063475	-0.1923833	1.799918413
F700	L	1.440000057	0.289462626	0.878406525	0.058332026	0.010063475	-0.27638149	0.535012186
F700	L	2.880000114	0.289462626	0.878406525	0.058332026	0.010063475	-0.36037964	-0.72989404
F700	EX	0	-2.16508245	3.77496314	-0.01096614	-0.00999002	-0.02062539	4.999950409
F700	EX	1.440000057	-2.16508245	3.77496314	-0.01096614	-0.00999002	-0.00483415	-0.43599936
F700	EX	2.880000114	-2.16508245	3.77496314	-0.01096614	-0.00999002	0.010957101	-5.8719492
F700	EY	0	0.034509417	-0.00871735	2.916078091	0.065606035	4.05638504	-0.01306554
F700	EY	1.440000057	0.034509417	-0.00871735	2.916078091	0.065606035	-0.14277022	-0.00051254
F700	EY	2.880000114	0.034509417	-0.00871735	2.916078091	0.065606035	-4.34192562	0.012040449
F700	COMB1	0	-72.1043549	1.308367133	-0.19913313	0.033221148	-1.70029676	-6.03583431
F700	COMB1	1.440000057	-68.3718719	1.308367133	-0.19913313	0.033221148	-1.41354489	-7.9198842
F700	COMB1	2.880000114	-64.639389	1.308367133	-0.19913313	0.033221148	-1.12679303	-9.80393314
F700	COMB2	0	-65.6353683	4.096090794	0.66968292	0.028475866	-0.02260978	-2.06343317
F700	COMB2	1.440000057	-62.3694458	4.096090794	0.66968292	0.028475866	-0.98695379	-7.96180773
F700	COMB2	2.880000114	-59.1035194	4.096090794	0.66968292	0.028475866	-1.95129788	-13.8601818
F700	COMB3	0	-64.0511475	1.3717103	2.82089591	0.083889119	2.973683596	-5.67300081
F700	COMB3	1.440000057	-60.7852211	1.3717103	2.82089591	0.083889119	-1.0884093	-7.64826488

F700	COMB3	2.880000114	-57.5192986	1.3717103	2.82089591	0.083889119	-5.1505022	-9.62352848
F701	D	0	-60.4997406	0.114446677	-0.24097903	-0.00821979	-1.16989064	7.579161167
F701	D	1.440000057	-57.3893356	0.114446677	-0.24097903	-0.00821979	-0.82288057	7.414358616
F701	D	2.880000114	-54.2789345	0.114446677	-0.24097903	-0.00821979	-0.47587046	7.249555111
F701	L	0	0.424223959	-0.9143796	0.08650171	-0.00629851	-0.24460611	-1.89313543
F701	L	1.440000057	0.424223959	-0.9143796	0.08650171	-0.00629851	-0.36916867	-0.57642782
F701	L	2.880000114	0.424223959	-0.9143796	0.08650171	-0.00629851	-0.49373117	0.740279734
F701	EX	0	2.158432007	3.615452528	0.014553568	-0.00574484	0.026294576	4.729330063
F701	EX	1.440000057	2.158432007	3.615452528	0.014553568	-0.00574484	0.005337425	-0.47692525
F701	EX	2.880000114	2.158432007	3.615452528	0.014553568	-0.00574484	-0.01561973	-5.68318033
F701	EY	0	0.034509316	0.008717228	2.916077614	-0.06560598	4.056384087	0.013065384
F701	EY	1.440000057	0.034509316	0.008717228	2.916077614	-0.06560598	-0.14277014	0.000512567
F701	EY	2.880000114	0.034509316	0.008717228	2.916077614	-0.06560598	-4.34192467	-0.01204025
F701	COMB1	0	-71.920929	-1.32567143	-0.15077211	-0.01994136	-1.79523849	6.06597662
F701	COMB1	1.440000057	-68.188446	-1.32567143	-0.15077211	-0.01994136	-1.57812655	7.974945545
F701	COMB1	2.880000114	-64.4559631	-1.32567143	-0.15077211	-0.01994136	-1.36101449	9.883913994
F701	COMB2	0	-61.1462479	3.576878786	0.707847416	-0.0372266	-0.00046012	12.26075363
F701	COMB2	1.440000057	-57.8803253	3.576878786	0.707847416	-0.0372266	-1.01976109	7.110045433
F701	COMB2	2.880000114	-54.6144028	3.576878786	0.707847416	-0.0372266	-2.03906202	1.959336519
F701	COMB3	0	-62.6749573	0.980160058	2.840685844	-0.08131072	2.9620502	8.865239143
F701	COMB3	1.440000057	-59.4090347	0.980160058	2.840685844	-0.08131072	-1.12854004	7.453808308
F701	COMB3	2.880000114	-56.1431084	0.980160058	2.840685844	-0.08131072	-5.21913052	6.042376995
F702	D	0	-43.7003746	20.81814003	-0.10383555	-0.00833036	-0.91451794	31.94676018
F702	D	1.440000057	-40.5899696	20.81814003	-0.10383555	-0.00833036	-0.76499462	1.96862042
F702	D	2.880000114	-37.4795723	20.81814003	-0.10383555	-0.00833036	-0.61547136	-28.0095196
F702	L	0	0.489716798	0.933298767	0.076576777	-0.00778116	-0.17570184	2.427488089
F702	L	1.440000057	0.489716798	0.933298767	0.076576777	-0.00778116	-0.28597248	1.083536983
F702	L	2.880000114	0.489716798	0.933298767	0.076576777	-0.00778116	-0.3962431	-0.260414[illegible]15
F702	EX	0	-2.15244842	2.546182156	-0.02750047	-0.00817979	-0.04113115	2.217314482
F702	EX	1.440000057	-2.15244842	2.546182156	-0.02750047	-0.00817979	-0.00153045	-1.4491899
F702	EX	2.880000114	-2.15244842	2.546182156	-0.02750047	-0.00817979	0.038070254	-5.11569452
F702	EY	0	0.014336129	0.008593224	2.662764072	0.036187429	3.642884731	0.013063622
F702	EY	1.440000057	0.014336129	0.008593224	2.662764072	0.036187429	-0.19149803	0.000689371
F702	EY	2.880000114	0.014336129	0.008593224	2.662764072	0.036187429	-4.02588034	-0.01168488
F702	COMB1	0	-51.6569023	26.47504616	-0.00207983	-0.02244629	-1.37854445	42.22009277
F702	COMB1	1.440000057	-47.9244194	26.47504616	-0.00207983	-0.02244629	-1.37554955	4.096003532
F702	COMB1	2.880000114	-44.1919403	26.47504616	-0.00207983	-0.02244629	-1.37255454	-34.0280876
F702	COMB2	0	-47.9543991	24.79104233	0.725402057	-0.00826498	0.089348093	36.6077919
F702	COMB2	1.440000057	-44.6884766	24.79104233	0.725402057	-0.00826498	-0.95523161	0.9086712
F702	COMB2	2.880000114	-41.4225578	24.79104233	0.725402057	-0.00826498	-1.99981117	-34.790451
F702	COMB3	0	-46.3941002	22.96410751	2.702334166	0.024222227	2.796482801	35.02092743
F702	COMB3	1.440000057	-43.1281776	22.96410751	2.702334166	0.024222227	-1.0948807	1.952594638
F702	COMB3	2.880000114	-39.8622589	22.96410751	2.702334166	0.024222227	-4.98624372	-31.1157398
F703	D	0	-40.0252495	-19.6983128	7.064237118	-0.007289	13.85008144	-29.0982742
F703	D	1.440000057	-36.9148483	-19.6983128	7.064237118	-0.007289	3.677573204	-0.7326842
F703	D	2.880000114	-33.8044472	-19.6983128	7.064237118	-0.007289	-6.49493456	27.63290405
F703	L	0	-0.03696817	-0.70771456	0.980098069	0.020004379	2.271235704	-1.92469525
F703	L	1.440000057	-0.03696817	-0.70771456	0.980098069	0.020004379	0.859893501	-0.90558547
F703	L	2.880000114	-0.03696817	-0.70771456	0.980098069	0.020004379	-0.55144864	0.113524117
F703	EX	0	2.176707983	2.338200092	-0.03113725	0.104335845	-0.08612863	1.758782268
F703	EX	1.440000057	2.176707983	2.338200092	-0.03113725	0.104335845	-0.04129096	-1.60822809
F703	EX	2.880000114	2.176707983	2.338200092	-0.03113725	0.104335845	0.003546695	-4.97523832
F703	EY	0	-0.66312122	0.059531	1.122066855	-0.03729531	1.052615881	0.088992968
F703	EY	1.440000057	-0.66312122	0.059531	1.122066855	-0.03729531	-0.56316131	0.003268274
F703	EY	2.880000114	-0.66312122	0.059531	1.122066855	-0.03729531	-2.17893863	-0.08245642
F703	COMB1	0	-48.0894508	-24.770319	10.04524136	0.02326021	20.2540741	-37.9974442
F703	COMB1	1.440000057	-44.3569641	-24.770319	10.04524136	0.02326021	5.788917542	-2.32815766
F703	COMB1	2.880000114	-40.624485	-24.770319	10.04524136	0.02326021	-8.67623901	33.34112549
F703	COMB2	0	-39.9941483	-18.4673691	8.047404289	0.094887502	15.50045586	-29.3110962
F703	COMB2	1.440000057	-36.7282257	-18.4673691	8.047404289	0.094887502	3.912186384	-2.71806431
F703	COMB2	2.880000114	-33.4623032	-18.4673691	8.047404289	0.094887502	-7.67608213	23.87496376
F703	COMB3	0	-42.0487709	-20.1071186	8.89454174	-0.00764636	16.33614159	-30.5120087
F703	COMB3	1.440000057	-38.7828484	-20.1071186	8.89454174	-0.00764636	3.527992249	-1.55773795
F703	COMB3	2.880000114	-35.5169296	-20.1071186	8.89454174	-0.00764636	-9.28015614	27.39653015
F704	D	0	-56.6978569	-1.19140089	8.209207535	0.007410694	16.53523064	-9.82304001
F704	D	1.440000057	-53.5874596	-1.19140089	8.209207535	0.007410694	4.713963985	-8.10742188
F704	D	2.880000114	-50.4770546	-1.19140089	8.209207535	0.007410694	-7.10730267	-6.39180374
F704	L	0	-0.42912716	0.742432058	2.078472614	0.016029004	4.742146015	1.474250078
F704	L	1.440000057	-0.42912716	0.742432058	2.078472614	0.016029004	1.749143362	0.405147105
F704	L	2.880000114	-0.42912716	0.742432058	2.078472614	0.016029004	-1.24385893	-0.66395581
F704	EX	0	-2.17656541	3.764628172	0.004698714	0.019375646	0.013380992	4.934059143
F704	EX	1.440000057	-2.17656541	3.764628172	0.004698714	0.019375646	0.006614839	-0.48700845
F704	EX	2.880000114	-2.17656541	3.764628172	0.004698714	0.019375646	-0.00015131	-5.90807629
F704	EY	0	-0.7875675	0.070164353	1.319487333	0.078529678	1.402156115	0.111955136
F704	EY	1.440000057	-0.7875675	0.070164353	1.319487333	0.078529678	-0.49790701	0.01091841
F704	EY	2.880000114	-0.7875675	0.070164353	1.319487333	0.078529678	-2.39796996	-0.09011831
F704	COMB1	0	-68.7240295	-0.24178974	13.17660522	0.034539238	27.42970848	-9.42884827
F704	COMB1	1.440000057	-64.9915543	-0.24178974	13.17660522	0.034539238	8.455386162	-9.08067036
F704	COMB1	2.880000114	-61.2590714	-0.24178974	13.17660522	0.034539238	-10.5189371	-8.7324934
F704	COMB2	0	-62.1687546	2.901386976	9.694888115	0.05762101	19.31129646	-4.70778608
F704	COMB2	1.440000057	-58.9028358	2.901386976	9.694888115	0.05762101	5.350647926	-8.88578606
F704	COMB2	2.880000114	-55.6369133	2.901386976	9.694888115	0.05762101	-8.61000061	-13.0637865
F704	COMB3	0	-61.1804886	0.242425591	10.66132832	0.101389863	20.33224678	-8.17802143
F704	COMB3	1.440000057	-57.9145699	0.242425591	10.66132832	0.101389863	4.979923248	-8.52711487

F704	COMB3	2.880000114	-54.6486473	0.242425591	10.66132832	0.101389863	-10.3723993	-8.87620831
F705	D	0	-56.6973839	1.2359519	8.242138863	-0.00080514	16.63237	9.931229591
F705	D	1.440000057	-53.5869789	1.2359519	8.242138863	-0.00080514	4.763680935	8.151457787
F705	D	2.880000114	-50.4765816	1.2359519	8.242138863	-0.00080514	-7.10500717	6.371685982
F705	L	0	-0.52299702	-0.74244428	2.757603645	-0.01132859	6.298864841	-1.49992704
F705	L	1.440000057	-0.52299702	-0.74244428	2.757603645	-0.01132859	2.327912807	-0.43080652
F705	L	2.880000114	-0.52299702	-0.74244428	2.757603645	-0.01132859	-1.64303911	0.638313949
F705	EX	0	2.162471771	3.585817099	-0.00047678	-0.04023214	-0.0058314	4.633614063
F705	EX	1.440000057	2.162471771	3.585817099	-0.00047678	-0.04023214	-0.00514484	-0.5299657
F705	EX	2.880000114	2.162471771	3.585817099	-0.00047678	-0.04023214	-0.00445828	-5.69354582
F705	EY	0	-0.78756714	-0.07016396	1.319487214	-0.0785296	1.402155995	-0.11195444
F705	EY	1.440000057	-0.78756714	-0.07016396	1.319487214	-0.0785296	-0.4979068	-0.01091827
F705	EY	2.880000114	-0.78756714	-0.07016396	1.319487214	-0.0785296	-2.39796948	0.090117902
F705	COMB1	0	-68.8736572	0.295231402	14.30273342	-0.01909192	30.03702736	9.51759243
F705	COMB1	1.440000057	-65.1411667	0.295231402	14.30273342	-0.01909192	9.441077232	9.092459679
F705	COMB1	2.880000114	-61.4086914	0.295231402	14.30273342	-0.01909192	-11.154871	8.667325974
F705	COMB2	0	-57.7069206	4.753098488	9.938035965	-0.070791	19.8837738	14.71583939
F705	COMB2	1.440000057	-54.4409981	4.753098488	9.938035965	-0.070791	5.572991848	7.871373177
F705	COMB2	2.880000114	-51.1750793	4.753098488	9.938035965	-0.070791	-8.73778915	1.026906729
F705	COMB3	0	-59.842762	2.119739771	10.90820313	-0.09954311	20.91855812	11.29734993
F705	COMB3	1.440000057	-56.5768394	2.119739771	10.90820313	-0.09954311	5.210734844	8.244923592
F705	COMB3	2.880000114	-53.3109207	2.119739771	10.90820313	-0.09954311	-10.4970865	5.1924963
F706	D	0	-40.189827	19.68450546	8.070039749	0.012810231	16.12124634	29.0694561
F706	D	1.440000057	-37.079422	19.68450546	8.070039749	0.012810231	4.500381947	0.723749697
F706	D	2.880000114	-33.9690208	19.68450546	8.070039749	0.012810231	-7.12048197	-27.6219578
F706	L	0	-0.22176927	0.726987243	2.06211257	-0.01784745	4.728881359	1.944803834
F706	L	1.440000057	-0.22176927	0.726987243	2.06211257	-0.01784745	1.759437442	0.897941649
F706	L	2.880000114	-0.22176927	0.726987243	2.06211257	-0.01784745	-1.21000648	-0.14892066
F706	EX	0	-2.16237044	2.506723642	0.025339181	-0.05383572	0.075073346	2.095507383
F706	EX	1.440000057	-2.16237044	2.506723642	0.025339181	-0.05383572	0.038584907	-1.51417696
F706	EX	2.880000114	-2.16237044	2.506723642	0.025339181	-0.05383572	0.002096461	-5.12386131
F706	EY	0	-0.66312146	-0.05953055	1.122066975	0.037295122	1.052615762	-0.08899209
F706	EY	1.440000057	-0.66312146	-0.05953055	1.122066975	0.037295122	-0.56316161	-0.00326805
F706	EY	2.880000114	-0.66312146	-0.05953055	1.122066975	0.037295122	-2.17893887	0.082455985
F706	COMB1	0	-48.5826225	24.78458595	12.98342705	-0.01318365	26.91170502	37.99503326
F706	COMB1	1.440000057	-44.8501358	24.78458595	12.98342705	-0.01318365	8.215558052	2.305206299
F706	COMB1	2.880000114	-41.1176567	24.78458595	12.98342705	-0.01318365	-10.4805889	-33.3846207
F706	COMB2	0	-44.7161102	23.47343826	9.502783775	-0.03614321	18.82618141	33.27635956
F706	COMB2	1.440000057	-41.4501877	23.47343826	9.502783775	-0.03614321	5.142163277	-0.52541381
F706	COMB2	2.880000114	-38.1842651	23.47343826	9.502783775	-0.03614321	-8.5418539	-34.3271866
F706	COMB3	0	-43.6465988	21.62484169	10.30925846	0.03003042	19.54580116	31.70218468
F706	COMB3	1.440000057	-40.3806763	21.62484169	10.30925846	0.03003042	4.700458527	0.562391579
F706	COMB3	2.880000114	-37.1147537	21.62484169	10.30925846	0.03003042	-10.1448832	-30.5774021
F707	D	0	-20.4278374	-19.1755047	0.40084219	0.068061024	1.024841785	-28.4076672
F707	D	1.25	-20.4278374	-16.4755096	0.40084219	0.068061024	0.523788929	-6.12578154
F707	D	2.5	-20.4278374	-13.7755156	0.40084219	0.068061024	0.022736214	12.78110981
F707	D	3.75	-20.4278374	-11.0755205	0.40084219	0.068061024	-0.47831652	28.31300735
F707	D	5	-20.4278374	-8.37552547	0.40084219	0.068061024	-0.97936928	40.46991348
F707	L	0	-0.46370035	0.094162971	-0.03610565	0.043578312	-0.09026148	-0.02130411
F707	L	1.25	-0.46370035	0.094162971	-0.03610565	0.043578312	-0.04512941	-0.13900782
F707	L	2.5	-0.46370035	0.094162971	-0.03610565	0.043578312	2.66163E-06	-0.25671154
F707	L	3.75	-0.46370035	0.094162971	-0.03610565	0.043578312	0.045134731	-0.37441525
F707	L	5	-0.46370035	0.094162971	-0.03610565	0.043578312	0.090266801	-0.49211895
F707	EX	0	-3.8143568	2.272491693	-0.12981385	0.005969936	-0.32538408	5.193509102
F707	EX	1.25	-3.8143568	2.272491693	-0.12981385	0.005969936	-0.16311677	2.352894783
F707	EX	2.5	-3.8143568	2.272491693	-0.12981385	0.005969936	-0.00084945	-0.48771992
F707	EX	3.75	-3.8143568	2.272491693	-0.12981385	0.005969936	0.161417872	-3.32833457
F707	EX	5	-3.8143568	2.272491693	-0.12981385	0.005969936	0.323685199	-6.16894913
F707	EY	0	0.010607086	-0.02836312	0.066570222	-0.01810412	0.188592702	-0.05974804
F707	EY	1.25	0.010607086	-0.02836312	0.066570222	-0.01810412	0.105379909	-0.02429414
F707	EY	2.5	0.010607086	-0.02836312	0.066570222	-0.01810412	0.022167131	0.011159769
F707	EY	3.75	0.010607086	-0.02836312	0.066570222	-0.01810412	-0.06104565	0.046613675
F707	EY	5	0.010607086	-0.02836312	0.066570222	-0.01810412	-0.14425842	0.082067579
F707	COMB1	0	-25.2553253	-22.8599434	0.423241585	0.151398525	1.08539176	-34.1232872
F707	COMB1	1.25	-25.2553253	-19.6199512	0.423241585	0.151398525	0.556339681	-7.57335043
F707	COMB1	2.5	-25.2553253	-16.3799572	0.423241585	0.151398525	0.027287716	14.92659378
F707	COMB1	3.75	-25.2553253	-13.1399632	0.423241585	0.151398525	-0.50176424	33.37654495
F707	COMB1	5	-25.2553253	-9.89997005	0.423241585	0.151398525	-1.03081632	47.77650452
F707	COMB2	0	-25.5398121	-17.7615223	0.296123296	0.085667327	0.770285606	-24.4783001
F707	COMB2	1.25	-25.5398121	-14.9265299	0.296123296	0.085667327	0.400131434	-4.04826498
F707	COMB2	2.5	-25.5398121	-12.0915346	0.296123296	0.085667327	0.029977325	12.83802605
F707	COMB2	3.75	-25.5398121	-9.2565403	0.296123296	0.085667327	-0.34017679	26.18057442
F707	COMB2	5	-25.5398121	-6.42154646	0.296123296	0.085667327	-0.71033096	35.97937775
F707	COMB3	0	-22.7856789	-19.4185638	0.438518405	0.068062447	1.143177748	-28.2615414
F707	COMB3	1.25	-22.7856789	-16.5835705	0.438518405	0.068062447	0.595029771	-5.76020527
F707	COMB3	2.5	-22.7856789	-13.7485762	0.438518405	0.068062447	0.046881773	13.1973877
F707	COMB3	3.75	-22.7856789	-10.9135809	0.438518405	0.068062447	-0.50126618	28.61123657
F707	COMB3	5	-22.7856789	-8.07858753	0.438518405	0.068062447	-1.04941428	40.48134232
F708	D	0	-20.3984604	8.385695457	-0.41864029	-0.02724329	-1.023592	40.51167297
F708	D	1.25	-20.3984604	11.08568954	-0.41864029	-0.02724329	-0.50029171	28.34205818
F708	D	2.5	-20.3984604	13.78568459	-0.41864029	-0.02724329	0.023008665	12.79744816
F708	D	3.75	-20.3984604	16.48567963	-0.41864029	-0.02724329	0.546308994	-6.12215519
F708	D	5	-20.3984604	19.18567467	-0.41864029	-0.02724329	1.069609404	-28.4167519
F708	L	0	-0.47069326	-0.0775897	0.023578025	-0.02670964	0.059511427	-0.45446685

F712	COMB3	6	-23.1013088	5.078180313	0.429571569	-0.00139708	-1.30020094	-5.03888083
F713	D	0	-20.4243908	-18.9891262	0.329800606	-0.01603375	0.833414197	-27.9722824
F713	D	1.25	-20.4243908	-16.2891331	0.329800606	-0.01603375	0.42116344	-5.92336893
F713	D	2.5	-20.4243908	-13.589138	0.329800606	-0.01603375	0.008912637	12.75055122
F713	D	3.75	-20.4243908	-10.889143	0.329800606	-0.01603375	-0.40333813	28.04947662
F713	D	5	-20.4243908	-8.18914795	0.329800606	-0.01603375	-0.81558895	39.97341156
F713	L	0	-0.81231934	0.07327082	-0.03408901	-0.02414829	-0.08561849	-0.25041944
F713	L	1.25	-0.81231934	0.07327082	-0.03408901	-0.02414829	-0.04300722	-0.34200796
F713	L	2.5	-0.81231934	0.07327082	-0.03408901	-0.02414829	-0.00039595	-0.43359646
F713	L	3.75	-0.81231934	0.07327082	-0.03408901	-0.02414829	0.042215321	-0.52518505
F713	L	5	-0.81231934	0.07327082	-0.03408901	-0.02414829	0.084826596	-0.61677355
F713	EX	0	-3.72467685	2.160098314	-0.16508842	0.001855099	-0.41960531	5.012087822
F713	EX	1.25	-3.72467685	2.160098314	-0.16508842	0.001855099	-0.2132448	2.311964989
F713	EX	2.5	-3.72467685	2.160098314	-0.16508842	0.001855099	-0.00688428	-0.38815793
F713	EX	3.75	-3.72467685	2.160098314	-0.16508842	0.001855099	0.199476242	-3.08828068
F713	EX	5	-3.72467685	2.160098314	-0.16508842	0.001855099	0.405836761	-5.78840351
F713	EY	0	0.004832472	0.00156497	0.132905141	-0.01207958	0.340687901	0.004682628
F713	EY	1.25	0.004832472	0.00156497	0.132905141	-0.01207958	0.174556449	0.002726415
F713	EY	2.5	0.004832472	0.00156497	0.132905141	-0.01207958	0.008425014	0.000770203
F713	EY	3.75	0.004832472	0.00156497	0.132905141	-0.01207958	-0.15770644	-0.00118601
F713	EY	5	0.004832472	0.00156497	0.132905141	-0.01207958	-0.32383788	-0.00314222
F713	COMB1	0	-25.808979	-22.6697197	0.341218323	-0.05787776	0.863107443	-33.9674072
F713	COMB1	1.25	-25.808979	-19.4297256	0.341218323	-0.05787776	0.436584562	-7.65525532
F713	COMB1	2.5	-25.808979	-16.1897316	0.341218323	-0.05787776	0.010061646	14.60690689
F713	COMB1	3.75	-25.808979	-12.9497385	0.341218323	-0.05787776	-0.41646126	32.81907654
F713	COMB1	5	-25.808979	-9.70974445	0.341218323	-0.05787776	-0.8429842	46.98125458
F713	COMB2	0	-25.5550079	-17.6793079	0.206551209	-0.02632718	0.521140277	-24.2607918
F713	COMB2	1.25	-25.5550079	-14.8443146	0.206551209	-0.02632718	0.262951225	-3.93352723
F713	COMB2	2.5	-25.5550079	-12.0093203	0.206551209	-0.02632718	0.004762198	12.84999466
F713	COMB2	3.75	-25.5550079	-9.17432594	0.206551209	-0.02632718	-0.25342682	26.08977318
F713	COMB2	5	-25.5550079	-6.33933115	0.206551209	-0.02632718	-0.51161587	35.78580856
F713	COMB3	0	-22.8696899	-19.233429	0.423100144	-0.03654135	1.073661685	-27.8660526
F713	COMB3	1.25	-22.8696899	-16.3984356	0.423100144	-0.03654135	0.544786513	-5.596138
F713	COMB3	2.5	-22.8696899	-13.5634403	0.423100144	-0.03654135	0.015911262	13.13003445
F713	COMB3	3.75	-22.8696899	-10.728446	0.423100144	-0.03654135	-0.51296395	28.31246376
F713	COMB3	5	-22.8696899	-7.89345121	0.423100144	-0.03654135	-1.04183924	39.95114899
F714	D	0	-20.3749161	8.150242805	-0.34722218	-0.00262219	-0.85894847	39.90253067
F714	D	1.25	-20.3749161	10.85023785	-0.34722218	-0.00262219	-0.42492071	28.02722931
F714	D	2.5	-20.3749161	13.55023193	-0.34722218	-0.00262219	0.009107051	12.77693558
F714	D	3.75	-20.3749161	16.25022697	-0.34722218	-0.00262219	0.443134815	-5.84835291
F714	D	5	-20.3749161	18.95022202	-0.34722218	-0.00262219	0.877162576	-27.8486328
F714	L	0	-0.82993066	-0.07454072	0.021509102	0.016446382	0.053603001	-0.62931502
F714	L	1.25	-0.82993066	-0.07454072	0.021509102	0.016446382	0.026716622	-0.53613913
F714	L	2.5	-0.82993066	-0.07454072	0.021509102	0.016446382	-0.00016975	-0.44296321
F714	L	3.75	-0.82993066	-0.07454072	0.021509102	0.016446382	-0.02705613	-0.34978729
F714	L	5	-0.82993066	-0.07454072	0.021509102	0.016446382	-0.05394251	-0.25661141
F714	EX	0	-2.45777774	2.147274017	-0.16672517	0.001464018	-0.41239673	5.678127289
F714	EX	1.25	-2.45777774	2.147274017	-0.16672517	0.001464018	-0.20399025	2.994034767
F714	EX	2.5	-2.45777774	2.147274017	-0.16672517	0.001464018	0.004416231	0.309942007
F714	EX	3.75	-2.45777774	2.147274017	-0.16672517	0.001464018	0.21282272	-2.37415075
F714	EX	5	-2.45777774	2.147274017	-0.16672517	0.001464018	0.421229184	-5.05824327
F714	EY	0	0.004832404	-0.00156495	-0.13290526	0.012079509	-0.32383811	-0.0031422
F714	EY	1.25	0.004832404	-0.00156495	-0.13290526	0.012079509	-0.15770654	-0.00118601
F714	EY	2.5	0.004832404	-0.00156495	-0.13290526	0.012079509	0.008425046	0.000770181
F714	EY	3.75	0.004832404	-0.00156495	-0.13290526	0.012079509	0.174556628	0.00272637
F714	EY	5	0.004832404	-0.00156495	-0.13290526	0.012079509	0.340688199	0.004682558
F714	COMB1	0	-25.7777882	9.661026001	-0.38225207	0.023167586	-0.94497341	46.87613297
F714	COMB1	1.25	-25.7777882	12.90102005	-0.38225207	0.023167586	-0.46715823	32.77485275
F714	COMB1	2.5	-25.7777882	16.1410141	-0.38225207	0.023167586	0.010656854	14.62358093
F714	COMB1	3.75	-25.7777882	19.38100815	-0.38225207	0.023167586	0.488471955	-7.57768297
F714	COMB1	5	-25.7777882	22.6210022	-0.38225207	0.023167586	0.966287076	-33.8289375
F714	COMB2	0	-24.1973667	10.75621033	-0.57223362	0.007747617	-1.41385055	47.57529449
F714	COMB2	1.25	-24.1973667	13.59120464	-0.57223362	0.007747617	-0.69855845	32.35815811
F714	COMB2	2.5	-24.1973667	16.42619896	-0.57223362	0.007747617	0.016733618	13.59728146
F714	COMB2	3.75	-24.1973667	19.26119423	-0.57223362	0.007747617	0.732025683	-8.70734024
F714	COMB2	5	-24.1973667	22.0961895	-0.57223362	0.007747617	1.447317839	-34.555706
F714	COMB3	0	-22.4242153	9.209022522	-0.54987687	0.015571963	-1.3549459	43.48473358
F714	COMB3	1.25	-22.4242153	12.04401684	-0.54987687	0.015571963	-0.6675998	30.20158195
F714	COMB3	2.5	-22.4242153	14.87901211	-0.54987687	0.015571963	0.019746341	13.3746891
F714	COMB3	3.75	-22.4242153	17.71400642	-0.54987687	0.015571963	0.707092464	-6.99594831
F714	COMB3	5	-22.4242153	20.54900169	-0.54987687	0.015571963	1.394438624	-30.9103279
F715	D	0	-6.18462896	-4.87308168	0.009083778	-0.00189031	0.229890376	-4.34634542
F715	D	1.5	-6.18462896	-2.35308743	0.009083778	-0.00189031	0.21626471	1.073279858
F715	D	3	-6.18462896	0.166906834	0.009083778	-0.00189031	0.202639043	2.712914944
F715	D	4.5	-6.18462896	2.686901331	0.009083778	-0.00189031	0.189013377	0.572559655
F715	D	6	-6.18462896	5.206895351	0.009083778	-0.00189031	0.175387725	-5.34778595
F715	L	0	-1.12904382	0.048848152	0.000354407	9.99618E-06	-0.00826908	0.199729353
F715	L	1.5	-1.12904382	0.048848152	0.000354407	9.99618E-06	-0.00880069	0.126457155
F715	L	3	-1.12904382	0.048848152	0.000354407	9.99618E-06	-0.0093323	0.053184953
F715	L	4.5	-1.12904382	0.048848152	0.000354407	9.99618E-06	-0.00986391	-0.02008725
F715	L	6	-1.12904382	0.048848152	0.000354407	9.99618E-06	-0.01039552	-0.09335945
F715	EX	0	-0.23753262	0.002168201	0.038793024	-0.00193019	0.06286034	0.00393878
F715	EX	1.5	-0.23753262	0.002168201	0.038793024	-0.00193019	0.004670823	0.00068648
F715	EX	3	-0.23753262	0.002168201	0.038793024	-0.00193019	-0.05351869	-0.00256582

F715	EX	4.5	-0.23753262	0.002168201	0.038793024	-0.00193019	-0.11170822	-0.00581812
F715	EX	6	-0.23753262	0.002168201	0.038793024	-0.00193019	-0.16989774	-0.00907042
F715	EY	0	-11.5921478	0.595199227	-0.05373203	-0.00012075	-0.16260698	1.781024575
F715	EY	1.5	-11.5921478	0.595199227	-0.05373203	-0.00012075	-0.08200897	0.888226032
F715	EY	3	-11.5921478	0.595199227	-0.05373203	-0.00012075	-0.00141095	-0.00457251
F715	EY	4.5	-11.5921478	0.595199227	-0.05373203	-0.00012075	0.079187065	-0.89737105
F715	EY	6	-11.5921478	0.595199227	-0.05373203	-0.00012075	0.159785092	-1.7901696
F715	COMB1	0	-9.22802448	-5.76954126	0.011467584	-0.00225238	0.262637913	-4.89604759
F715	COMB1	1.5	-9.22802448	-2.74554777	0.011467584	-0.00225238	0.245436534	1.490267277
F715	COMB1	3	-9.22802448	0.278445244	0.011467584	-0.00225238	0.22823517	3.340593815
F715	COMB1	4.5	-9.22802448	3.302438498	0.011467584	-0.00225238	0.211033791	0.654931962
F715	COMB1	6	-9.22802448	6.326431274	0.011467584	-0.00225238	0.193832427	-6.5667181
F715	COMB2	0	-10.7468824	-4.9116168	0.032874797	-0.00401746	0.252619386	-3.93564868
F715	COMB2	1.5	-10.7468824	-2.26562262	0.032874797	-0.00401746	0.203307196	1.447279572
F715	COMB2	3	-10.7468824	0.380371183	0.032874797	-0.00401746	0.153995022	2.861217976
F715	COMB2	4.5	-10.7468824	3.02636528	0.032874797	-0.00401746	0.10468284	0.3061665
F715	COMB2	6	-10.7468824	5.67235899	0.032874797	-0.00401746	0.055370674	-6.217875
F715	COMB3	0	-19.0960865	-4.47570658	-0.03454923	-0.00271647	0.087843798	-2.62943149
F715	COMB3	1.5	-19.0960865	-1.82971239	-0.03454923	-0.00271647	0.1396676	2.099631548
F715	COMB3	3	-19.0960865	0.816281497	-0.03454923	-0.00271647	0.191491425	2.859704494
F715	COMB3	4.5	-19.0960865	3.462275505	-0.03454923	-0.00271647	0.24331525	-0.3492122
F715	COMB3	6	-19.0960865	6.108269691	-0.03454923	-0.00271647	0.295139074	-7.52711868
F716	D	0	-8.7499733	-4.84166336	0.010977169	-0.00041026	0.22210516	-4.21624851
F716	D	1.5	-8.7499733	-2.32166886	0.010977169	-0.00041026	0.205639422	1.156248927
F716	D	3	-8.7499733	0.198325351	0.010977169	-0.00041026	0.189173669	2.748755932
F716	D	4.5	-8.7499733	2.718319654	0.010977169	-0.00041026	0.172707915	0.561272979
F716	D	6	-8.7499733	5.238313675	0.010977169	-0.00041026	0.156242162	-5.40620041
F716	L	0	-2.25133133	0.089649759	0.000461644	0.001631713	-0.00755029	0.371393919
F716	L	1.5	-2.25133133	0.089649759	0.000461644	0.001631713	-0.00824276	0.236919314
F716	L	3	-2.25133133	0.089649759	0.000461644	0.001631713	-0.00893522	0.102444723
F716	L	4.5	-2.25133133	0.089649759	0.000461644	0.001631713	-0.00962769	-0.03202987
F716	L	6	-2.25133133	0.089649759	0.000461644	0.001631713	-0.01032015	-0.16650447
F716	EX	0	0.26479739	-0.00339521	0.04229458	-0.00266913	0.078780077	-0.01268119
F716	EX	1.5	0.26479739	-0.00339521	0.04229458	-0.00266913	0.015338228	-0.00758838
F716	EX	3	0.26479739	-0.00339521	0.04229458	-0.00266913	-0.04810362	-0.00249557
F716	EX	4.5	0.26479739	-0.00339521	0.04229458	-0.00266913	-0.11154547	0.00259724
F716	EX	6	0.26479739	-0.00339521	0.04229458	-0.00266913	-0.17498732	0.007690051
F716	EY	0	-11.5486641	0.639656842	-0.06565344	1.42241E-06	-0.1973339	1.912955523
F716	EY	1.5	-11.5486641	0.639656842	-0.06565344	1.42241E-06	-0.09885377	0.953470528
F716	EY	3	-11.5486641	0.639656842	-0.06565344	1.42241E-06	-0.00037365	-0.0060145
F716	EY	4.5	-11.5486641	0.639656842	-0.06565344	1.42241E-06	0.098106474	-0.96549952
F716	EY	6	-11.5486641	0.639656842	-0.06565344	1.42241E-06	0.196586609	-1.92498457
F716	COMB1	0	-14.1020975	-5.66655636	0.013911232	0.002118428	0.254445732	-4.46526814
F716	COMB1	1.5	-14.1020975	-2.6425631	0.013911232	0.002118428	0.233578891	1.766569614
F716	COMB1	3	-14.1020975	0.38143006	0.013911232	0.002118428	0.212712035	3.462418795
F716	COMB1	4.5	-14.1020975	3.405423164	0.013911232	0.002118428	0.191845194	0.622279823
F716	COMB1	6	-14.1020975	6.42941618	0.013911232	0.002118428	0.170978352	-6.7538476
F716	COMB2	0	-13.2604046	-4.85752916	0.034765504	-0.00267888	0.250209272	-3.72061586
F716	COMB2	1.5	-13.2604046	-2.21153474	0.034765504	-0.00267888	0.198061049	1.581180215
F716	COMB2	3	-13.2604046	0.43445918	0.034765504	-0.00267888	0.145912796	2.913986444
F716	COMB2	4.5	-13.2604046	3.080453157	0.034765504	-0.00267888	0.093764558	0.277803034
F716	COMB2	6	-13.2604046	5.726447105	0.034765504	-0.00267888	0.041616332	-6.32737017
F716	COMB3	0	-21.9393272	-4.38493681	-0.04394187	-0.00075607	0.048447207	-2.30546308
F716	COMB3	1.5	-21.9393272	-1.7389425	-0.04394187	-0.00075607	0.114359997	2.287444592
F716	COMB3	3	-21.9393272	0.907051504	-0.04394187	-0.00075607	0.180272773	2.911362648
F716	COMB3	4.5	-21.9393272	3.553045511	-0.04394187	-0.00075607	0.246185556	-0.43370911
F716	COMB3	6	-21.9393272	6.199039459	-0.04394187	-0.00075607	0.312098354	-7.74777079
F717	D	0	-8.82095909	-4.83810902	-0.00999884	0.000373926	-0.22257446	-4.2008152
F717	D	1.5	-8.82095909	-2.31811452	-0.00999884	0.000373926	-0.20757622	1.166350842
F717	D	3	-8.82095909	0.201879725	-0.00999884	0.000373926	-0.19257796	2.753526449
F717	D	4.5	-8.82095909	2.721873999	-0.00999884	0.000373926	-0.1775797	0.56071192
F717	D	6	-8.82095909	5.241868019	-0.00999884	0.000373926	-0.16258144	-5.41209269
F717	L	0	-2.98783112	0.116595075	0.000551584	-0.00155657	0.007697134	0.485144526
F717	L	1.5	-2.98783112	0.116595075	0.000551584	-0.00155657	0.006869758	0.310251951
F717	L	3	-2.98783112	0.116595075	0.000551584	-0.00155657	0.006042383	0.135359406
F717	L	4.5	-2.98783112	0.116595075	0.000551584	-0.00155657	0.005215007	-0.03953316
F717	L	6	-2.98783112	0.116595075	0.000551584	-0.00155657	0.004387632	-0.21442573
F717	EX	0	-0.29356691	0.003218111	0.036239382	-0.0020705	0.05725852	0.011873382
F717	EX	1.5	-0.29356691	0.003218111	0.036239382	-0.0020705	0.002899465	0.007046218
F717	EX	3	-0.29356691	0.003218111	0.036239382	-0.0020705	-0.05145959	0.002219053
F717	EX	4.5	-0.29356691	0.003218111	0.036239382	-0.0020705	-0.10581864	-0.00260811
F717	EX	6	-0.29356691	0.003218111	0.036239382	-0.0020705	-0.16017769	-0.00743528
F717	EY	0	-11.5486641	0.639656782	0.065653548	-1.4267E-06	0.1973342	1.912955284
F717	EY	1.5	-11.5486641	0.639656782	0.065653548	-1.4267E-06	0.098853916	0.953470349
F717	EY	3	-11.5486641	0.639656782	0.065653548	-1.4267E-06	0.000373622	-0.0060145
F717	EY	4.5	-11.5486641	0.639656782	0.065653548	-1.4267E-06	-0.09810667	-0.9654994
F717	EY	6	-11.5486641	0.639656782	0.065653548	-1.4267E-06	-0.19658697	-1.92498422
F717	COMB1	0	-15.3656807	-5.61917877	-0.01111607	-0.00204181	-0.25477391	-4.26474714
F717	COMB1	1.5	-15.3656807	-2.59518528	-0.01111607	-0.00204181	-0.23809984	1.896024108
F717	COMB1	3	-15.3656807	0.428807795	-0.01111607	-0.00204181	-0.22142573	3.520806789
F717	COMB1	4.5	-15.3656807	3.452800989	-0.01111607	-0.00204181	-0.20475163	0.6096012
F717	COMB1	6	-15.3656807	6.476793766	-0.01111607	-0.00204181	-0.18807752	-6.8375926
F717	COMB2	0	-14.144845	-4.83846426	0.047863595	-0.00224111	-0.10985573	-3.64316559
F717	COMB2	1.5	-14.144845	-2.19247007	0.047863595	-0.00224111	-0.18165112	1.630033731

F717	COMB2	3	-14.144845	0.453523785	0.047863595	-0.00224111	-0.25344649	2.934242964
F717	COMB2	4.5	-14.144845	3.099517822	0.047863595	-0.00224111	-0.32524183	0.269462824
F717	COMB2	6	-14.144845	5.745511532	0.047863595	-0.00224111	-0.39703721	-6.3643074
F717	COMB3	0	-22.4217453	-4.3706336	0.070026599	-0.0007514	-0.00604123	-2.24569225
F717	COMB3	1.5	-22.4217453	-1.72463942	0.070026599	-0.0007514	-0.1110811	2.32576108
F717	COMB3	3	-22.4217453	0.921354473	0.070026599	-0.0007514	-0.21612097	2.928224802
F717	COMB3	4.5	-22.4217453	3.56734848	0.070026599	-0.0007514	-0.32116082	-0.43830141
F717	COMB3	6	-22.4217453	6.213342667	0.070026599	-0.0007514	-0.42620069	-7.77381706
F718	D	0	-7.19052887	-4.83672523	-0.00823862	0.00174126	-0.23087676	-4.19380379
F718	D	1.5	-7.19052887	-2.31673121	-0.00823862	0.00174126	-0.21851882	1.171287298
F718	D	3	-7.19052887	0.203262895	-0.00823862	0.00174126	-0.20616089	2.756387949
F718	D	4.5	-7.19052887	2.723257303	-0.00823862	0.00174126	-0.19380297	0.561498761
F718	D	6	-7.19052887	5.243251324	-0.00823862	0.00174126	-0.18144503	-5.41338062
F718	L	0	-2.22452664	0.089450613	0.000504771	-3.9629E-05	0.007816694	0.370407134
F718	L	1.5	-2.22452664	0.089450613	0.000504771	-3.9629E-05	0.007059538	0.236231297
F718	L	3	-2.22452664	0.089450613	0.000504771	-3.9629E-05	0.006302383	0.102055401
F718	L	4.5	-2.22452664	0.089450613	0.000504771	-3.9629E-05	0.005545227	-0.03212047
F718	L	6	-2.22452664	0.089450613	0.000504771	-3.9629E-05	0.004788071	-0.16629635
F718	EX	0	0.26477319	-0.00206357	0.034067433	-0.00124602	0.047186069	-0.00342883
F718	EX	1.5	0.26477319	-0.00206357	0.034067433	-0.00124602	-0.00391507	-0.00033348
F718	EX	3	0.26477319	-0.00206357	0.034067433	-0.00124602	-0.0550162	0.002761873
F718	EX	4.5	0.26477319	-0.00206357	0.034067433	-0.00124602	-0.10611734	0.005857222
F718	EX	6	0.26477319	-0.00206357	0.034067433	-0.00124602	-0.15721847	0.008952571
F718	EY	0	-11.5921469	0.595199347	0.053732105	0.000120741	0.162607193	1.781025052
F718	EY	1.5	-11.5921469	0.595199347	0.053732105	0.000120741	0.082009055	0.888226271
F718	EY	3	-11.5921469	0.595199347	0.053732105	0.000120741	0.001410918	-0.0045725
F718	EY	4.5	-11.5921469	0.595199347	0.053732105	0.000120741	-0.07918721	-0.89737129
F718	EY	6	-11.5921469	0.595199347	0.053732105	0.000120741	-0.15978535	-1.79017007
F718	COMB1	0	-12.1878777	-5.66094971	-0.00907871	0.002026106	-0.26454538	-4.43991327
F718	COMB1	1.5	-12.1878777	-2.63695669	-0.00907871	0.002026106	-0.25092733	1.783514738
F718	COMB1	3	-12.1878777	0.387036443	-0.00907871	0.002026106	-0.23730926	3.47095418
F718	COMB1	4.5	-12.1878777	3.411029816	-0.00907871	0.002026106	-0.2236912	0.622405708
F718	COMB1	6	-12.1878777	6.435022354	-0.00907871	0.002026106	-0.21007313	-6.76213121
F718	COMB2	0	-11.6282673	-4.86503267	0.043693859	0.000564243	-0.13989949	-3.72934198
F718	COMB2	1.5	-11.6282673	-2.21903896	0.043693859	0.000564243	-0.20544025	1.58371067
F718	COMB2	3	-11.6282673	0.426954985	0.043693859	0.000564243	-0.27098101	2.927772999
F718	COMB2	4.5	-11.6282673	3.072949171	0.043693859	0.000564243	-0.3365218	0.302846014
F718	COMB2	6	-11.6282673	5.718942642	0.043693859	0.000564243	-0.40206254	-6.29107094
F718	COMB3	0	-20.3391323	-4.42607546	0.058658402	0.001550122	-0.05435717	-2.41781974
F718	COMB3	1.5	-20.3391323	-1.78008163	0.058658402	0.001550122	-0.14234474	2.236797094
F718	COMB3	3	-20.3391323	0.865912259	0.058658402	0.001550122	-0.23033233	2.92242384
F718	COMB3	4.5	-20.3391323	3.511906385	0.058658402	0.001550122	-0.31831992	-0.36093909
F718	COMB3	6	-20.3391323	6.157899857	0.058658402	0.001550122	-0.40630749	-7.61329174
F719	D	0	-20.4410572	-18.9738388	-0.3857078	0.003992455	-0.97613204	-27.9457397
F719	D	1.25	-20.4410572	-16.2738438	-0.3857078	0.003992455	-0.49399728	-5.91593981
F719	D	2.5	-20.4410572	-13.5738487	-0.3857078	0.003992455	-0.01186251	12.73886776
F719	D	3.75	-20.4410572	-10.8738537	-0.3857078	0.003992455	0.470272213	28.01868248
F719	D	5	-20.4410572	-8.1738596	-0.3857078	0.003992455	0.952407062	39.92350388
F719	L	0	-0.82423025	0.102971785	0.00232067	0.003375508	0.006018364	-0.18896772
F719	L	1.25	-0.82423025	0.102971785	0.00232067	0.003375508	0.003117528	-0.31768247
F719	L	2.5	-0.82423025	0.102971785	0.00232067	0.003375508	0.00021669	-0.44639719
F719	L	3.75	-0.82423025	0.102971785	0.00232067	0.003375508	-0.00268415	-0.57511199
F719	L	5	-0.82423025	0.102971785	0.00232067	0.003375508	-0.00558498	-0.70382667
F719	EX	0	-3.71815014	2.121504784	0.020889534	0.001894351	0.053694241	4.921436787
F719	EX	1.25	-3.71815014	2.121504784	0.020889534	0.001894351	0.027582321	2.269555569
F719	EX	2.5	-3.71815014	2.121504784	0.020889534	0.001894351	0.001470404	-0.38232526
F719	EX	3.75	-3.71815014	2.121504784	0.020889534	0.001894351	-0.02464152	-3.03420615
F719	EX	5	-3.71815014	2.121504784	0.020889534	0.001894351	-0.05075343	-5.68608713
F719	EY	0	-0.00087532	0.001356774	0.136085987	-0.01288529	0.350240409	0.003197812
F719	EY	1.25	-0.00087532	0.001356774	0.136085987	-0.01288529	0.180132911	0.001501844
F719	EY	2.5	-0.00087532	0.001356774	0.136085987	-0.01288529	0.010025421	-0.00019412
F719	EY	3.75	-0.00087532	0.001356774	0.136085987	-0.01288529	-0.16008209	-0.00189009
F719	EY	5	-0.00087532	0.001356774	0.136085987	-0.01288529	-0.33018956	-0.00358606
F719	COMB1	0	-25.8480377	-22.6038513	-0.45913631	0.010191758	-1.1617291	-33.8372383
F719	COMB1	1.25	-25.8480377	-19.3638573	-0.45913631	0.010191758	-0.58780867	-7.60741949
F719	COMB1	2.5	-25.8480377	-16.1238632	-0.45913631	0.010191758	-0.01388831	14.57240677
F719	COMB1	3.75	-25.8480377	-12.8838692	-0.45913631	0.010191758	0.56003201	32.70223999
F719	COMB1	5	-25.8480377	-9.64387608	-0.45913631	0.010191758	1.133952498	46.7820816
F719	COMB2	0	-25.5713043	-17.6939087	-0.33977443	0.00315715	-0.85714358	-24.3078575
F719	COMB2	1.25	-25.5713043	-14.8589144	-0.33977443	0.00315715	-0.43242553	-3.96234345
F719	COMB2	2.5	-25.5713043	-12.0239201	-0.33977443	0.00315715	-0.00770751	12.8394289
F719	COMB2	3.75	-25.5713043	-9.18892574	-0.33977443	0.00315715	0.417010516	26.09745789
F719	COMB2	5	-25.5713043	-6.35393143	-0.33977443	0.00315715	0.841728628	35.81174469
F719	COMB3	0	-22.8948784	-19.220396	-0.25479171	-0.00767747	-0.63837677	-27.8489418
F719	COMB3	1.25	-22.8948784	-16.3854008	-0.25479171	-0.00767747	-0.31988713	-5.59531975
F719	COMB3	2.5	-22.8948784	-13.5504065	-0.25479171	-0.00767747	-0.00139751	13.11456013
F719	COMB3	3.75	-22.8948784	-10.7154112	-0.25479171	-0.00767747	0.317092061	28.28069687
F719	COMB3	5	-22.8948784	-7.88041735	-0.25479171	-0.00767747	0.635581791	39.90309143
F720	D	0	-20.3904495	8.151420593	0.383342177	-0.00102325	0.946505964	39.89468002
F720	D	1.25	-20.3904495	10.85141563	0.383342177	-0.00102325	0.46732825	28.01791
F720	D	2.5	-20.3904495	13.55140972	0.383342177	-0.00102325	-0.01184949	12.76614189
F720	D	3.75	-20.3904495	16.25140381	0.383342177	-0.00102325	-0.49102724	-5.86061764
F720	D	5	-20.3904495	18.95139885	0.383342177	-0.00102325	-0.97020501	-27.8623714
F720	L	0	-0.83968991	-0.09597842	-0.00310772	-0.00216216	-0.00753791	-0.69488299

F720	L	1.25	-0.83968991	-0.09597842	-0.00310772	-0.00216216	-0.00365326	-0.57490999
F720	L	2.5	-0.83968991	-0.09597842	-0.00310772	-0.00216216	0.000231388	-0.45493692
F720	L	3.75	-0.83968991	-0.09597842	-0.00310772	-0.00216216	0.004116034	-0.33496392
F720	L	5	-0.83968991	-0.09597842	-0.00310772	-0.00216216	0.00800068	-0.2149909
F720	EX	0	-2.47352815	2.118229866	0.028056419	0.001767317	0.069069937	5.599009037
F720	EX	1.25	-2.47352815	2.118229866	0.028056419	0.001767317	0.03399941	2.951221704
F720	EX	2.5	-2.47352815	2.118229866	0.028056419	0.001767317	-0.00107112	0.303434134
F720	EX	3.75	-2.47352815	2.118229866	0.028056419	0.001767317	-0.03614164	-2.3443532
F720	EX	5	-2.47352815	2.118229866	0.028056419	0.001767317	-0.07121217	-4.99214077
F720	EY	0	-0.00087531	-0.00135687	-0.13608599	0.012885222	-0.33018953	-0.0035863
F720	EY	1.25	-0.00087531	-0.00135687	-0.13608599	0.012885222	-0.16008206	-0.00189022
F720	EY	2.5	-0.00087531	-0.00135687	-0.13608599	0.012885222	0.010025444	-0.00019413
F720	EY	3.75	-0.00087531	-0.00135687	-0.13608599	0.012885222	0.18013294	0.001501958
F720	EY	5	-0.00087531	-0.00135687	-0.13608599	0.012885222	0.350240439	0.003198046
F720	COMB1	0	-25.8120422	9.628138542	0.455038279	-0.00468736	1.123746514	46.76180649
F720	COMB1	1.25	-25.8120422	12.86813354	0.455038279	-0.00468736	0.554948688	32.70163345
F720	COMB1	2.5	-25.8120422	16.10812569	0.455038279	-0.00468736	-0.01384916	14.59147167
F720	COMB1	3.75	-25.8120422	19.34811974	0.455038279	-0.00468736	-0.58264703	-7.56868362
F720	COMB1	5	-25.8120422	22.58811378	0.455038279	-0.00468736	-1.15144491	-33.7788315
F720	COMB2	0	-24.2348499	10.72069836	0.38770166	0.004132525	0.958934546	47.46437073
F720	COMB2	1.25	-24.2348499	13.55569363	0.38770166	0.004132525	0.474307448	32.29162598
F720	COMB2	2.5	-24.2348499	16.39068794	0.38770166	0.004132525	-0.01031966	13.57513714
F720	COMB2	3.75	-24.2348499	19.2256813	0.38770166	0.004132525	-0.49494675	-8.68509483
F720	COMB2	5	-24.2348499	22.06067657	0.38770166	0.004132525	-0.97957391	-34.4890709
F720	COMB3	0	-22.4545536	9.194576263	0.26747784	0.012330695	0.666514874	43.43045044
F720	COMB3	1.25	-22.4545536	12.02957058	0.26747784	0.012330695	0.332167566	30.16535759
F720	COMB3	2.5	-22.4545536	14.8645649	0.26747784	0.012330695	-0.00217976	13.35652161
F720	COMB3	3.75	-22.4545536	17.69955826	0.26747784	0.012330695	-0.33652708	-6.99605656
F720	COMB3	5	-22.4545536	20.53455353	0.26747784	0.012330695	-0.67087442	-30.8923779
F721	D	0	-6.49231148	-5.06419945	0.357892841	-0.0220734	1.062146068	-5.13868523
F721	D	1.5	-6.49231148	-2.54420376	0.357892841	-0.0220734	0.525306761	0.567617893
F721	D	3	-6.49231148	-0.02420864	0.357892841	-0.0220734	-0.01153253	2.493927479
F721	D	4.5	-6.49231148	2.495786667	0.357892841	-0.0220734	-0.54837185	0.640243769
F721	D	6	-6.49231148	5.015781879	0.357892841	-0.0220734	-1.08521116	-4.99343348
F721	L	0	-1.08707011	-0.00297378	-0.00527239	-0.00318831	-0.01622496	-0.01669558
F721	L	1.5	-1.08707011	-0.00297378	-0.00527239	-0.00318831	-0.00831636	-0.01223491
F721	L	3	-1.08707011	-0.00297378	-0.00527239	-0.00318831	-0.00040777	-0.00777423
F721	L	4.5	-1.08707011	-0.00297378	-0.00527239	-0.00318831	0.007500824	-0.00331356
F721	L	6	-1.08707011	-0.00297378	-0.00527239	-0.00318831	0.015409417	0.001147114
F721	EX	0	-0.20016655	0.006133176	-0.06002267	-4.5908E-05	-0.20793805	0.017938288
F721	EX	1.5	-0.20016655	0.006133176	-0.06002267	-4.5908E-05	-0.11790402	0.008738522
F721	EX	3	-0.20016655	0.006133176	-0.06002267	-4.5908E-05	-0.02787	-0.00046124
F721	EX	4.5	-0.20016655	0.006133176	-0.06002267	-4.5908E-05	0.06216402	-0.00966101
F721	EX	6	-0.20016655	0.006133176	-0.06002267	-4.5908E-05	0.152198046	-0.01886077
F721	EY	0	-9.19906998	0.607747436	-0.05199851	-7.3919E-06	-0.15501967	1.800326228
F721	EY	1.5	-9.19906998	0.607747436	-0.05199851	-7.3919E-06	-0.0770219	0.888704956
F721	EY	3	-9.19906998	0.607747436	-0.05199851	-7.3919E-06	0.000975863	-0.0229164
F721	EY	4.5	-9.19906998	0.607747436	-0.05199851	-7.3919E-06	0.078973629	-0.93453765
F721	EY	6	-9.19906998	0.607747436	-0.05199851	-7.3919E-06	0.156971395	-1.84615898
F721	COMB1	0	-9.53008556	-6.08179712	0.421035558	-0.03158938	1.248615384	-6.19313526
F721	COMB1	1.5	-9.53008556	-3.05780268	0.421035558	-0.03158938	0.617061973	0.661565661
F721	COMB1	3	-9.53008556	-0.03380841	0.421035558	-0.03158938	-0.01449147	2.9802742
F721	COMB1	4.5	-9.53008556	2.990185738	0.421035558	-0.03158938	-0.64604491	0.762990832
F721	COMB1	6	-9.53008556	6.014180183	0.421035558	-0.03158938	-1.27759826	-5.99028492
F721	COMB2	0	-10.2642336	-5.12055779	0.29562366	-0.02423124	0.846095502	-4.81520987
F721	COMB2	1.5	-10.2642336	-2.47456241	0.29562366	-0.02423124	0.402659893	0.881131232
F721	COMB2	3	-10.2642336	0.17143248	0.29562366	-0.02423124	-0.04077566	2.608479023
F721	COMB2	4.5	-10.2642336	2.817427397	0.29562366	-0.02423124	-0.48421124	0.366833687
F721	COMB2	6	-10.2642336	5.463422775	0.29562366	-0.02423124	-0.92764676	-5.84380484
F721	COMB3	0	-16.8814297	-4.6782794	0.300621092	-0.02420362	0.881871402	-3.50488567
F721	COMB3	1.5	-16.8814297	-2.03228402	0.300621092	-0.02420362	0.430939704	1.528037667
F721	COMB3	3	-16.8814297	0.61371094	0.300621092	-0.02420362	-0.019992	2.591967583
F721	COMB3	4.5	-16.8814297	3.25970602	0.300621092	-0.02420362	-0.47092369	-0.31309557
F721	COMB3	6	-16.8814297	5.90570116	0.300621092	-0.02420362	-0.92185539	-7.18715191
F722	D	0	-8.25968266	-5.06028271	0.370131254	-0.00150912	1.101688027	-5.13502836
F722	D	1.5	-8.25968266	-2.54028749	0.370131254	-0.00150912	0.546491086	0.565400183
F722	D	3	-8.25968266	-0.02029227	0.370131254	-0.00150912	-0.00870586	2.485835314
F722	D	4.5	-8.25968266	2.499703169	0.370131254	-0.00150912	-0.5639028	0.62627703
F722	D	6	-8.25968266	5.01969862	0.370131254	-0.00150912	-1.11909986	-5.01327467
F722	L	0	-2.1755507	-0.00084716	-0.00564506	0.001011083	-0.01729779	-0.0163296
F722	L	1.5	-2.1755507	-0.00084716	-0.00564506	0.001011083	-0.0088302	-0.01505886
F722	L	3	-2.1755507	-0.00084716	-0.00564506	0.001011083	-0.0003626	-0.01378812
F722	L	4.5	-2.1755507	-0.00084716	-0.00564506	0.001011083	0.008104993	-0.01251738
F722	L	6	-2.1755507	-0.00084716	-0.00564506	0.001011083	0.016572587	-0.01124664
F722	EX	0	0.211116865	-0.01036933	-0.0639587	0.009793093	-0.21773845	-0.03157743
F722	EX	1.5	0.211116865	-0.01036933	-0.0639587	0.009793093	-0.1218004	-0.01602343
F722	EX	3	0.211116865	-0.01036933	-0.0639587	0.009793093	-0.02586233	-0.00046943
F722	EX	4.5	0.211116865	-0.01036933	-0.0639587	0.009793093	0.070075743	0.015084571
F722	EX	6	0.211116865	-0.01036933	-0.0639587	0.009793093	0.166013792	0.030638576
F722	EY	0	-9.1890583	0.653480351	-0.06483592	-2.8656E-05	-0.19364522	1.937500477
F722	EY	1.5	-9.1890583	0.653480351	-0.06483592	-2.8656E-05	-0.09639134	0.957279742
F722	EY	3	-9.1890583	0.653480351	-0.06483592	-2.8656E-05	0.000862547	-0.02294085
F722	EY	4.5	-9.1890583	0.653480351	-0.06483592	-2.8656E-05	0.098116435	-1.00316155
F722	EY	6	-9.1890583	0.653480351	-0.06483592	-2.8656E-05	0.195370317	-1.98338211

F724	COMB3	6	-18.1304817	5.892987251	-0.34054947	0.026118875	1.025755882	-7.15742779
F725	D	0	-20.8156986	-19.155323	-0.3440828	-0.00052907	-0.86770833	-28.5617771
F725	D	1.25	-20.8156986	-16.4553299	-0.3440828	-0.00052907	-0.43760484	-6.30511808
F725	D	2.5	-20.8156986	-13.7553349	-0.3440828	-0.00052907	-0.00750136	12.57654858
F725	D	3.75	-20.8156986	-11.0553408	-0.3440828	-0.00052907	0.422602117	28.08321953
F725	D	5	-20.8156986	-8.35534573	-0.3440828	-0.00052907	0.852705598	40.21490097
F725	L	0	-0.89073831	0.112294137	0.006413509	1.52582E-05	0.016320152	-0.19880901
F725	L	1.25	-0.89073831	0.112294137	0.006413509	1.52582E-05	0.008303265	-0.33917668
F725	L	2.5	-0.89073831	0.112294137	0.006413509	1.52582E-05	0.000286378	-0.4795444
F725	L	3.75	-0.89073831	0.112294137	0.006413509	1.52582E-05	-0.00773051	-0.61991203
F725	L	5	-0.89073831	0.112294137	0.006413509	1.52582E-05	-0.01574739	-0.76027972
F725	EX	0	-3.7680254	2.176072598	0.118866727	0.001889776	0.301734775	4.980194092
F725	EX	1.25	-3.7680254	2.176072598	0.118866727	0.001889776	0.153151363	2.260103226
F725	EX	2.5	-3.7680254	2.176072598	0.118866727	0.001889776	0.00456796	-0.45998773
F725	EX	3.75	-3.7680254	2.176072598	0.118866727	0.001889776	-0.14401545	-3.18007851
F725	EX	5	-3.7680254	2.176072598	0.118866727	0.001889776	-0.29259884	-5.90016985
F725	EY	0	7.35893E-05	0.001281599	0.13267462	-0.01289895	0.341537178	0.00317772
F725	EY	1.25	7.35893E-05	0.001281599	0.13267462	-0.01289895	0.17569387	0.001575722
F725	EY	2.5	7.35893E-05	0.001281599	0.13267462	-0.01289895	0.00985059	-2.6276E-05
F725	EY	3.75	7.35893E-05	0.001281599	0.13267462	-0.01289895	-0.1559927	-0.00162827
F725	EY	5	7.35893E-05	0.001281599	0.13267462	-0.01289895	-0.32183596	-0.00323027
F725	COMB1	0	-26.4040203	-22.8067188	-0.40263772	-0.00061047	-1.01513779	-34.5922279
F725	COMB1	1.25	-26.4040203	-19.5667248	-0.40263772	-0.00061047	-0.51184058	-8.10882473
F725	COMB1	2.5	-26.4040203	-16.3267307	-0.40263772	-0.00061047	-0.00854343	14.32458687
F725	COMB1	3.75	-26.4040203	-13.0867376	-0.40263772	-0.00061047	0.494753718	32.708004
F725	COMB1	5	-26.4040203	-9.84674358	-0.40263772	-0.00061047	0.998050928	47.04143143
F725	COMB2	0	-26.0369492	-17.825079	-0.1944471	-0.00265797	-0.48607323	-24.8969898
F725	COMB2	1.25	-26.0369492	-14.9900837	-0.1944471	-0.00265797	-0.24301432	-4.38751125
F725	COMB2	2.5	-26.0369492	-12.1550903	-0.1944471	-0.00265797	4.45512E-05	12.57822323
F725	COMB2	3.75	-26.0369492	-9.32009602	-0.1944471	-0.00265797	0.243103415	26.00021362
F725	COMB2	5	-26.0369492	-6.48510122	-0.1944471	-0.00265797	0.486162335	35.87846375
F725	COMB3	0	-23.3239174	-19.3909092	-0.18251529	-0.01349934	-0.45229244	-28.4803944
F725	COMB3	1.25	-23.3239174	-16.5559139	-0.18251529	-0.01349934	-0.22414832	-6.01362753
F725	COMB3	2.5	-23.3239174	-13.7209206	-0.18251529	-0.01349934	0.003995803	12.90939522
F725	COMB3	3.75	-23.3239174	-10.8859262	-0.18251529	-0.01349934	0.232139915	28.2886734
F725	COMB3	5	-23.3239174	-8.05093193	-0.18251529	-0.01349934	0.460284054	40.12421036
F726	D	0	-20.7661324	8.332593918	0.345384985	0.000536668	0.855924666	40.1848793
F726	D	1.25	-20.7661324	11.03258896	0.345384985	0.000536668	0.424193382	28.08163643
F726	D	2.5	-20.7661324	13.73258305	0.345384985	0.000536668	-0.00753789	12.60340405
F726	D	3.75	-20.7661324	16.43257904	0.345384985	0.000536668	-0.43926916	-6.24982262
F726	D	5	-20.7661324	19.13257408	0.345384985	0.000536668	-0.87100047	-28.4780426
F726	L	0	-0.91307855	-0.10481283	-0.00416212	2.5195E-05	-0.01018257	-0.75340629
F726	L	1.25	-0.91307855	-0.10481283	-0.00416212	2.5195E-05	-0.00497992	-0.62239033
F726	L	2.5	-0.91307855	-0.10481283	-0.00416212	2.5195E-05	0.000222723	-0.49137425
F726	L	3.75	-0.91307855	-0.10481283	-0.00416212	2.5195E-05	0.005425367	-0.36035821
F726	L	5	-0.91307855	-0.10481283	-0.00416212	2.5195E-05	0.010628011	-0.22934216
F726	EX	0	-2.51715374	2.167969704	0.102297291	0.001945209	0.254170865	5.706204414
F726	EX	1.25	-2.51715374	2.167969704	0.102297291	0.001945209	0.126299262	2.996242285
F726	EX	2.5	-2.51715374	2.167969704	0.102297291	0.001945209	-0.00157237	0.286280125
F726	EX	3.75	-2.51715374	2.167969704	0.102297291	0.001945209	-0.12944399	-2.42368197
F726	EX	5	-2.51715374	2.167969704	0.102297291	0.001945209	-0.25731561	-5.1336441
F726	EY	0	7.36012E-05	-0.00128173	-0.13267407	0.012898883	-0.32183462	-0.0032306
F726	EY	1.25	7.36012E-05	-0.00128173	-0.13267407	0.012898883	-0.15599203	-0.00162844
F726	EY	2.5	7.36012E-05	-0.00128173	-0.13267407	0.012898883	0.00985057	-2.6278E-05
F726	EY	3.75	7.36012E-05	-0.00128173	-0.13267407	0.012898883	0.175693169	0.001575882
F726	EY	5	7.36012E-05	-0.00128173	-0.13267407	0.012898883	0.341535777	0.003178041
F726	COMB1	0	-26.3802834	9.831412315	0.407802612	0.000684313	1.010817528	47.0164032
F726	COMB1	1.25	-26.3802834	13.07140541	0.407802612	0.000684313	0.501064181	32.70214081
F726	COMB1	2.5	-26.3802834	16.31139946	0.407802612	0.000684313	-0.00868911	14.33788586
F726	COMB1	3.75	-26.3802834	19.55139351	0.407802612	0.000684313	-0.51844239	-8.07635975
F726	COMB1	5	-26.3802834	22.79138756	0.407802612	0.000684313	-1.02819574	-34.5405998
F726	COMB2	0	-24.6972885	10.95965195	0.42542854	0.006647876	1.057202339	47.86170197
F726	COMB2	1.25	-24.6972885	13.79464722	0.42542854	0.006647876	0.525416613	32.3902626
F726	COMB2	2.5	-24.6972885	16.62964058	0.42542854	0.006647876	-0.00636909	13.37508297
F726	COMB2	3.75	-24.6972885	19.46463585	0.42542854	0.006647876	-0.53815484	-9.18384075
F726	COMB2	5	-24.6972885	22.29963112	0.42542854	0.006647876	-1.06994057	-35.2865067
F726	COMB3	0	-22.8848839	9.397771835	0.25425905	0.014728005	0.637650847	43.75086212
F726	COMB3	1.25	-22.8848839	12.23276711	0.25425905	0.014728005	0.31982702	30.23177338
F726	COMB3	2.5	-22.8848839	15.06776142	0.25425905	0.014728005	0.00200318	13.1689415
F726	COMB3	3.75	-22.8848839	17.90275574	0.25425905	0.014728005	-0.31582066	-7.43763161
F726	COMB3	5	-22.8848839	20.73775101	0.25425905	0.014728005	-0.63364452	-31.5879478
F727	D	0	-6.84476185	-5.01715946	-0.0490624	0.008561022	-0.24402724	-5.00175095
F727	D	1.5	-6.84476185	-2.49716449	-0.0490624	0.008561022	-0.17043364	0.633993089
F727	D	3	-6.84476185	0.022830857	-0.0490624	0.008561022	-0.09684002	2.489743471
F727	D	4.5	-6.84476185	2.542826176	-0.0490624	0.008561022	-0.02324642	0.565500498
F727	D	6	-6.84476185	5.062821865	-0.0490624	0.008561022	0.050347187	-5.13873625
F727	L	0	-1.05912924	0.013253742	0.000609328	-0.00118146	0.00417506	0.032048665
F727	L	1.5	-1.05912924	0.013253742	0.000609328	-0.00118146	0.003261068	0.012168051
F727	L	3	-1.05912924	0.013253742	0.000609328	-0.00118146	0.002347076	-0.00771256
F727	L	4.5	-1.05912924	0.013253742	0.000609328	-0.00118146	0.001433084	-0.02759318
F727	L	6	-1.05912924	0.013253742	0.000609328	-0.00118146	0.000519093	-0.04747379
F727	EX	0	-0.05913056	0.005209796	-0.0309042	-0.00011212	-0.07529913	0.01584729
F727	EX	1.5	-0.05913056	0.005209796	-0.0309042	-0.00011212	-0.02894282	0.008032596
F727	EX	3	-0.05913056	0.005209796	-0.0309042	-0.00011212	0.017413486	0.000217902

F727	EX	4.5	-0.05913056	0.005209796	-0.0309042	-0.00011212	0.063769788	-0.00759679
F727	EX	6	-0.05913056	0.005209796	-0.0309042	-0.00011212	0.1101261	-0.01541149
F727	EY	0	-6.66567707	0.638298452	-0.0495834	-7.1773E-05	-0.14814803	1.90704453
F727	EY	1.5	-6.66567707	0.638298452	-0.0495834	-7.1773E-05	-0.07377291	0.949596822
F727	EY	3	-6.66567707	0.638298452	-0.0495834	-7.1773E-05	0.000602184	-0.00785104
F727	EY	4.5	-6.66567707	0.638298452	-0.0495834	-7.1773E-05	0.074977286	-0.96529889
F727	EY	6	-6.66567707	0.638298452	-0.0495834	-7.1773E-05	0.149352401	-1.92274666
F727	COMB1	0	-9.90832043	-5.99938583	-0.05789996	0.008382882	-0.2861526	-5.95082331
F727	COMB1	1.5	-9.90832043	-2.97539139	-0.05789996	0.008382882	-0.19930266	0.780260563
F727	COMB1	3	-9.90832043	0.048603013	-0.05789996	0.008382882	-0.11245271	2.975352049
F727	COMB1	4.5	-9.90832043	3.072597504	-0.05789996	0.008382882	-0.02560277	0.634451509
F727	COMB1	6	-9.90832043	6.096591949	-0.05789996	0.008382882	0.06124717	-6.24244165
F727	COMB2	0	-9.68151379	-5.0573864	-0.0989282	0.00847826	-0.37951469	-4.62462234
F727	COMB2	1.5	-9.68151379	-2.4113915	-0.0989282	0.00847826	-0.23112237	0.976962388
F727	COMB2	3	-9.68151379	0.23460348	-0.0989282	0.00847826	-0.08273005	2.609553814
F727	COMB2	4.5	-9.68151379	2.880598545	-0.0989282	0.00847826	0.065662257	0.273151845
F727	COMB2	6	-9.68151379	5.526593685	-0.0989282	0.00847826	0.21405457	-6.03224325
F727	COMB3	0	-14.5382128	-4.59198809	-0.11312097	0.008506232	-0.43418813	-3.2343545
F727	COMB3	1.5	-14.5382128	-1.9459933	-0.11312097	0.008506232	-0.26450664	1.66913259
F727	COMB3	3	-14.5382128	0.700001776	-0.11312097	0.008506232	-0.09482516	2.603626251
F727	COMB3	4.5	-14.5382128	3.345996857	-0.11312097	0.008506232	0.074856319	-0.43087316
F727	COMB3	6	-14.5382128	5.991991997	-0.11312097	0.008506232	0.244537801	-7.43436575
F728	D	0	-7.8574419	-5.00142574	-0.04467404	0.01429485	-0.22559004	-4.96072197
F728	D	1.5	-7.8574419	-2.48143029	-0.04467404	0.01429485	-0.15857898	0.651420712
F728	D	3	-7.8574419	0.038564958	-0.04467404	0.01429485	-0.0915679	2.483570099
F728	D	4.5	-7.8574419	2.558560371	-0.04467404	0.01429485	-0.02455684	0.535725832
F728	D	6	-7.8574419	5.078556061	-0.04467404	0.01429485	0.04245422	-5.19211149
F728	L	0	-2.12660813	0.023642717	0.000415422	-0.00063266	0.003411355	0.056594811
F728	L	1.5	-2.12660813	0.023642717	0.000415422	-0.00063266	0.002788222	0.021130729
F728	L	3	-2.12660813	0.023642717	0.000415422	-0.00063266	0.002165088	-0.01433335
F728	L	4.5	-2.12660813	0.023642717	0.000415422	-0.00063266	0.001541955	-0.04979743
F728	L	6	-2.12660813	0.023642717	0.000415422	-0.00063266	0.000918822	-0.08526151
F728	EX	0	0.060465954	-0.00210179	-0.03422778	-0.0006867	-0.08784739	-0.00560658
F728	EX	1.5	0.060465954	-0.00210179	-0.03422778	-0.0006867	-0.03650573	-0.0024539
F728	EX	3	0.060465954	-0.00210179	-0.03422778	-0.0006867	0.014835945	0.000698776
F728	EX	4.5	0.060465954	-0.00210179	-0.03422778	-0.0006867	0.066177614	0.003851454
F728	EX	6	0.060465954	-0.00210179	-0.03422778	-0.0006867	0.117519289	0.007004132
F728	EY	0	-6.67926741	0.684212029	-0.06242813	-9.2018E-05	-0.18656173	2.044594526
F728	EY	1.5	-6.67926741	0.684212029	-0.06242813	-9.2018E-05	-0.09291953	1.018276334
F728	EY	3	-6.67926741	0.684212029	-0.06242813	-9.2018E-05	0.000722676	-0.00804178
F728	EY	4.5	-6.67926741	0.684212029	-0.06242813	-9.2018E-05	0.094364882	-1.03436005
F728	EY	6	-6.67926741	0.684212029	-0.06242813	-9.2018E-05	0.188007087	-2.06067824
F728	COMB1	0	-12.8315039	-5.96388245	-0.05294417	0.016141564	-0.26524988	-5.8623147
F728	COMB1	1.5	-12.8315039	-2.939888	-0.05294417	0.016141564	-0.1858336	0.815514028
F728	COMB1	3	-12.8315039	0.084106296	-0.05294417	0.016141564	-0.10641734	2.957350731
F728	COMB1	4.5	-12.8315039	3.108100891	-0.05294417	0.016141564	-0.02700108	0.563195109
F728	COMB1	6	-12.8315039	6.132095337	-0.05294417	0.016141564	0.052415181	-6.36695242
F728	COMB2	0	-10.9615831	-5.03069782	-0.1018675	0.014070584	-0.38548395	-4.55268621
F728	COMB2	1.5	-10.9615831	-2.38470292	-0.1018675	0.014070584	-0.2326827	1.008865237
F728	COMB2	3	-10.9615831	0.2612921	-0.1018675	0.014070584	-0.07988145	2.60142374
F728	COMB2	4.5	-10.9615831	2.907287359	-0.1018675	0.014070584	0.072919801	0.224988803
F728	COMB2	6	-10.9615831	5.553282738	-0.1018675	0.014070584	0.225721061	-6.12043905
F728	COMB3	0	-15.9143801	-4.52628899	-0.12310817	0.014497375	-0.4593567	-3.04587245
F728	COMB3	1.5	-15.9143801	-1.88029385	-0.12310817	0.014497375	-0.27469444	1.759065151
F728	COMB3	3	-15.9143801	0.765701234	-0.12310817	0.014497375	-0.09003217	2.595009804
F728	COMB3	4.5	-15.9143801	3.411696434	-0.12310817	0.014497375	0.0946301	-0.53803885
F728	COMB3	6	-15.9143801	6.057691574	-0.12310817	0.014497375	0.279292375	-7.64008045
F729	D	0	-7.9273138	-5.00048733	0.04373325	-0.01436186	0.222780511	-4.95882273
F729	D	1.5	-7.9273138	-2.48049212	0.04373325	-0.01436186	0.157180637	0.651912451
F729	D	3	-7.9273138	0.039503332	0.04373325	-0.01436186	0.091580749	2.482654095
F729	D	4.5	-7.9273138	2.559498787	0.04373325	-0.01436186	0.025980862	0.533402443
F729	D	6	-7.9273138	5.079493999	0.04373325	-0.01436186	-0.03961902	-5.19584274
F729	L	0	-2.84836125	0.028927278	-0.00134109	0.000535453	-0.0061573	0.067726232
F729	L	1.5	-2.84836125	0.028927278	-0.00134109	0.000535453	-0.00414568	0.024335306
F729	L	3	-2.84836125	0.028927278	-0.00134109	0.000535453	-0.00213405	-0.01905562
F729	L	4.5	-2.84836125	0.028927278	-0.00134109	0.000535453	-0.00012242	-0.06244654
F729	L	6	-2.84836125	0.028927278	-0.00134109	0.000535453	0.001889208	-0.10583746
F729	EX	0	-0.10028569	0.002443082	-0.03433188	-0.00057202	-0.09118056	0.006599667
F729	EX	1.5	-0.10028569	0.002443082	-0.03433188	-0.00057202	-0.03968273	0.002935044
F729	EX	3	-0.10028569	0.002443082	-0.03433188	-0.00057202	0.011815082	-0.00072958
F729	EX	4.5	-0.10028569	0.002443082	-0.03433188	-0.00057202	0.063312903	-0.0043942
F729	EX	6	-0.10028569	0.002443082	-0.03433188	-0.00057202	0.114810713	-0.00805883
F729	EY	0	-6.67926788	0.684211969	0.062427763	9.20263E-05	0.186560556	2.044594288
F729	EY	1.5	-6.67926788	0.684211969	0.062427763	9.20263E-05	0.092918903	1.018276215
F729	EY	3	-6.67926788	0.684211969	0.062427763	9.20263E-05	-0.00072275	-0.00804178
F729	EY	4.5	-6.67926788	0.684211969	0.062427763	9.20263E-05	-0.0943644	-1.03435981
F729	EY	6	-6.67926788	0.684211969	0.062427763	9.20263E-05	-0.18800604	-2.06067777
F729	COMB1	0	-14.0701542	-5.95430136	0.050334163	-0.0163775	0.257484943	-5.84222507
F729	COMB1	1.5	-14.0701542	-2.93030667	0.050334163	-0.0163775	0.18198368	0.821231425
F729	COMB1	3	-14.0701542	0.093687646	0.050334163	-0.0163775	0.106482416	2.948696136
F729	COMB1	4.5	-14.0701542	3.11768198	0.050334163	-0.0163775	0.030981161	0.540168464
F729	COMB1	6	-14.0701542	6.141676426	0.050334163	-0.0163775	-0.04452009	-6.40435123
F729	COMB2	0	-11.4286785	-5.02334452	0.029628726	-0.01547434	0.196374685	-4.5345521
F729	COMB2	1.5	-11.4286785	-2.37734914	0.029628726	-0.01547434	0.151931599	1.015968442

F729	COMB2	3	-11.4286785	0.268645942	0.029628726	-0.01547434	0.107488506	2.597496033
F729	COMB2	4.5	-11.4286785	2.914641142	0.029628726	-0.01547434	0.063045405	0.210030541
F729	COMB2	6	-11.4286785	5.560636044	0.029628726	-0.01547434	0.01860231	-6.14642811
F729	COMB3	0	-16.2657337	-4.52220774	0.10023208	-0.01499484	0.399146706	-3.03652716
F729	COMB3	1.5	-16.2657337	-1.87621236	0.10023208	-0.01499484	0.248798564	1.762288332
F729	COMB3	3	-16.2657337	0.769782722	0.10023208	-0.01499484	0.098450422	2.592110634
F729	COMB3	4.5	-16.2657337	3.415777922	0.10023208	-0.01499484	-0.05189772	-0.54706007
F729	COMB3	6	-16.2657337	6.061772823	0.10023208	-0.01499484	-0.20224585	-7.65522385
F730	D	0	-7.83804321	-5.01069832	0.048176944	-0.00859901	0.241375282	-4.98856783
F730	D	1.5	-7.83804321	-2.49070311	0.048176944	-0.00859901	0.169109851	0.637484372
F730	D	3	-7.83804321	0.029292066	0.048176944	-0.00859901	0.096844427	2.483542919
F730	D	4.5	-7.83804321	2.549287319	0.048176944	-0.00859901	0.024579003	0.549608171
F730	D	6	-7.83804321	5.069282532	0.048176944	-0.00859901	-0.04768642	-5.16431999
F730	L	0	-2.1429131	0.02071215	-0.00143885	0.001264391	-0.00664841	0.047287032
F730	L	1.5	-2.1429131	0.02071215	-0.00143885	0.001264391	-0.00449014	0.0162188
F730	L	3	-2.1429131	0.02071215	-0.00143885	0.001264391	-0.00233187	-0.01484943
F730	L	4.5	-2.1429131	0.02071215	-0.00143885	0.001264391	-0.0001736	-0.04591766
F730	L	6	-2.1429131	0.02071215	-0.00143885	0.001264391	0.001984676	-0.07698589
F730	EX	0	0.10006389	-0.00525877	-0.03251998	-0.00029773	-0.08552905	-0.01582125
F730	EX	1.5	0.10006389	-0.00525877	-0.03251998	-0.00029773	-0.03674907	-0.0079331
F730	EX	3	0.10006389	-0.00525877	-0.03251998	-0.00029773	0.012030896	-4.4952E-05
F730	EX	4.5	0.10006389	-0.00525877	-0.03251998	-0.00029773	0.060810868	0.007843197
F730	EX	6	0.10006389	-0.00525877	-0.03251998	-0.00029773	0.109590836	0.015731348
F730	EY	0	-6.66567612	0.638298571	0.049583051	7.1781E-05	0.148146927	1.907045007
F730	EY	1.5	-6.66567612	0.638298571	0.049583051	7.1781E-05	0.073772334	0.949597001
F730	EY	3	-6.66567612	0.638298571	0.049583051	7.1781E-05	-0.00060225	-0.00785103
F730	EY	4.5	-6.66567612	0.638298571	0.049583051	7.1781E-05	-0.07497684	-0.96529901
F730	EY	6	-6.66567612	0.638298571	0.049583051	7.1781E-05	-0.14935143	-1.92274702
F730	COMB1	0	-12.8343124	-5.97969866	0.055510178	-0.00829579	0.279012889	-5.91062212
F730	COMB1	1.5	-12.8343124	-2.95570421	0.055510178	-0.00829579	0.195747599	0.790931284
F730	COMB1	3	-12.8343124	0.068289921	0.055510178	-0.00829579	0.112482324	2.956492424
F730	COMB1	4.5	-12.8343124	3.092284203	0.055510178	-0.00829579	0.029217051	0.586061537
F730	COMB1	6	-12.8343124	6.116278648	0.055510178	-0.00829579	-0.05404822	-6.32036161
F730	COMB2	0	-10.9010849	-5.05908775	0.032093041	-0.00891622	0.209493518	-4.63875675
F730	COMB2	1.5	-10.9010849	-2.41309285	0.032093041	-0.00891622	0.161353946	0.965379775
F730	COMB2	3	-10.9010849	0.232902229	0.032093041	-0.00891622	0.113214374	2.600522995
F730	COMB2	4.5	-10.9010849	2.87889719	0.032093041	-0.00891622	0.065074816	0.266673058
F730	COMB2	6	-10.9010849	5.52489233	0.032093041	-0.00891622	0.016935252	-6.03617001
F730	COMB3	0	-15.8724031	-4.58615208	0.091950968	-0.00864909	0.379962415	-3.22568727
F730	COMB3	1.5	-15.8724031	-1.94015694	0.091950968	-0.00864909	0.24203594	1.669045448
F730	COMB3	3	-15.8724031	0.705838025	0.091950968	-0.00864909	0.104109474	2.594784737
F730	COMB3	4.5	-15.8724031	3.351833105	0.091950968	-0.00864909	-0.03381698	-0.4484688
F730	COMB3	6	-15.8724031	5.997828007	0.091950968	-0.00864909	-0.17174345	-7.46071577
F731	D	0	-20.882761	-18.9161091	0.005495825	-0.0039785	0.014372327	-28.008997
F731	D	1.25	-20.882761	-16.216114	0.005495825	-0.0039785	0.007502546	-6.05135679
F731	D	2.5	-20.882761	-13.516119	0.005495825	-0.0039785	0.000632765	12.53128815
F731	D	3.75	-20.882761	-10.816124	0.005495825	-0.0039785	-0.00623702	27.73894119
F731	D	5	-20.882761	-8.11612892	0.005495825	-0.0039785	-0.0131068	39.57159805
F731	L	0	-0.89814603	0.109623089	0.000723103	-0.00368409	0.001813353	-0.20981853
F731	L	1.25	-0.89814603	0.109623089	0.000723103	-0.00368409	0.000909475	-0.34684739
F731	L	2.5	-0.89814603	0.109623089	0.000723103	-0.00368409	5.59693E-06	-0.48387623
F731	L	3.75	-0.89814603	0.109623089	0.000723103	-0.00368409	-0.00089828	-0.6209051
F731	L	5	-0.89814603	0.109623089	0.000723103	-0.00368409	-0.00180216	-0.75793397
F731	EX	0	-3.75581861	2.168176889	0.059162017	0.002158464	0.14849624	4.964990139
F731	EX	1.25	-3.75581861	2.168176889	0.059162017	0.002158464	0.074543715	2.254768848
F731	EX	2.5	-3.75581861	2.168176889	0.059162017	0.002158464	0.000591183	-0.45545235
F731	EX	3.75	-3.75581861	2.168176889	0.059162017	0.002158464	-0.07336134	-3.16567349
F731	EX	5	-3.75581861	2.168176889	0.059162017	0.002158464	-0.14731388	-5.87589455
F731	EY	0	0.000785051	-9.0486E-05	0.130267307	-0.01300553	0.335704744	-9.2694E-05
F731	EY	1.25	0.000785051	-9.0486E-05	0.130267307	-0.01300553	0.172870621	2.04138E-05
F731	EY	2.5	0.000785051	-9.0486E-05	0.130267307	-0.01300553	0.010036491	0.000133522
F731	EY	3.75	0.000785051	-9.0486E-05	0.130267307	-0.01300553	-0.15279764	0.000246629
F731	EY	5	0.000785051	-9.0486E-05	0.130267307	-0.01300553	-0.31563178	0.000359737
F731	COMB1	0	-26.4963474	-22.5239334	0.007751954	-0.01066875	0.020148158	-33.9465065
F731	COMB1	1.25	-26.4963474	-19.2839394	0.007751954	-0.01066875	0.010458215	-7.81658411
F731	COMB1	2.5	-26.4963474	-16.0439453	0.007751954	-0.01066875	0.000768273	14.26334381
F731	COMB1	3.75	-26.4963474	-12.8039522	0.007751954	-0.01066875	-0.00892167	32.29328156
F731	COMB1	5	-26.4963474	-9.56395817	0.007751954	-0.01066875	-0.01861161	46.27322388
F731	COMB2	0	-26.0968399	-17.5833492	0.108265281	-0.00720064	0.275102764	-24.3368034
F731	COMB2	1.25	-26.0968399	-14.748354	0.108265281	-0.00720064	0.139771149	-4.12948942
F731	COMB2	2.5	-26.0968399	-11.9133587	0.108265281	-0.00720064	0.004439535	12.53408051
F731	COMB2	3.75	-26.0968399	-9.07836437	0.108265281	-0.00720064	-0.13089207	25.65390968
F731	COMB2	5	-26.0968399	-6.24336958	0.108265281	-0.00720064	-0.2662237	35.22999191
F731	COMB3	0	-23.3920746	-19.1445026	0.1614151	-0.0183138	0.414928466	-27.911665
F731	COMB3	1.25	-23.3920746	-16.3095074	0.1614151	-0.0183138	0.213159591	-5.75290823
F731	COMB3	2.5	-23.3920746	-13.4745131	0.1614151	-0.0183138	0.011390704	12.86210442
F731	COMB3	3.75	-23.3920746	-10.6395187	0.1614151	-0.0183138	-0.19037817	27.93337631
F731	COMB3	5	-23.3920746	-7.80452394	0.1614151	-0.0183138	-0.39214706	39.46089935
F732	D	0	-20.8335552	8.093568802	-0.00195718	0.001033299	-0.00430973	39.54182434
F732	D	1.25	-20.8335552	10.79356289	-0.00195718	0.001033299	-0.00186326	27.73736763
F732	D	2.5	-20.8335552	13.49355793	-0.00195718	0.001033299	0.000583222	12.55791569
F732	D	3.75	-20.8335552	16.19355392	-0.00195718	0.001033299	0.003029701	-5.99652863
F732	D	5	-20.8335552	18.89354706	-0.00195718	0.001033299	0.005476178	-27.9259682
F732	L	0	-0.92308587	-0.10253476	0.002332346	0.002375394	0.005748381	-0.75346488

F734	COMB1	0	-12.9032364	-6.41091347	0.007948778	-0.00291775	0.019208411	-6.71991158
F734	COMB1	1.5	-12.9032364	-3.38692403	0.007948778	-0.00291775	0.007285261	0.628454983
F734	COMB1	3	-12.9032364	-0.36293477	0.007948778	-0.00291775	-0.00463789	3.440844536
F734	COMB1	4.5	-12.9032364	2.661054373	0.007948778	-0.00291775	-0.01656104	1.7172575
F734	COMB1	6	-12.9032364	5.685043812	0.007948778	-0.00291775	-0.02848418	-4.54230642
F734	COMB2	0	-10.2819948	-5.3097105	-0.02731541	-0.00245695	-0.06918485	-5.08243132
F734	COMB2	1.5	-10.2819948	-2.66371942	-0.02731541	-0.00245695	-0.02821181	0.897631764
F734	COMB2	3	-10.2819948	-0.01772896	-0.02731541	-0.00245695	0.012761237	2.90871501
F734	COMB2	4.5	-10.2819948	2.628261566	-0.02731541	-0.00245695	0.053734284	0.950818479
F734	COMB2	6	-10.2819948	5.274252415	-0.02731541	-0.00245695	0.094707333	-4.97605801
F734	COMB3	0	-13.23421	-4.77684212	-0.06328352	-0.00257801	-0.18779372	-3.49646664
F734	COMB3	1.5	-13.23421	-2.13085127	-0.06328352	-0.00257801	-0.0928686	1.684295297
F734	COMB3	3	-13.23421	0.515139222	-0.06328352	-0.00257801	0.002056527	2.896077394
F734	COMB3	4.5	-13.23421	3.161129713	-0.06328352	-0.00257801	0.096981652	0.138879791
F734	COMB3	6	-13.23421	5.807120323	-0.06328352	-0.00257801	0.19190678	-6.58729744
F735	D	0	-8.00923443	-5.25513172	-0.00648189	0.002301781	-0.02216371	-5.45253372
F735	D	1.5	-8.00923443	-2.73514056	-0.00648189	0.002301781	-0.01244089	0.540161252
F735	D	3	-8.00923443	-0.21514951	-0.00648189	0.002301781	-0.00271807	2.752875328
F735	D	4.5	-8.00923443	2.304841518	-0.00648189	0.002301781	0.007004747	1.185608745
F735	D	6	-8.00923443	4.824832439	-0.00648189	0.002301781	0.016727565	-4.16163826
F735	L	0	-2.83675766	-0.09502631	-0.00172213	3.52687E-05	-0.0040476	-0.16313635
F735	L	1.5	-2.83675766	-0.09502631	-0.00172213	3.52687E-05	-0.00146441	-0.02059711
F735	L	3	-2.83675766	-0.09502631	-0.00172213	3.52687E-05	0.001118787	0.121942133
F735	L	4.5	-2.83675766	-0.09502631	-0.00172213	3.52687E-05	0.003701983	0.264481366
F735	L	6	-2.83675766	-0.09502631	-0.00172213	3.52687E-05	0.006285178	0.407020599
F735	EX	0	-0.02854176	0.0023191	-0.01234416	6.47114E-05	-0.02428365	0.006537512
F735	EX	1.5	-0.02854176	0.0023191	-0.01234416	6.47114E-05	-0.00576744	0.003058868
F735	EX	3	-0.02854176	0.0023191	-0.01234416	6.47114E-05	0.012748778	-0.00041978
F735	EX	4.5	-0.02854176	0.0023191	-0.01234416	6.47114E-05	0.031264991	-0.00389842
F735	EX	6	-0.02854176	0.0023191	-0.01234416	6.47114E-05	0.049781203	-0.00737707
F735	EY	0	-4.02690554	0.723221302	0.062104616	0.000156301	0.18757388	2.152765036
F735	EY	1.5	-4.02690554	0.723221302	0.062104616	0.000156301	0.094417095	1.067934871
F735	EY	3	-4.02690554	0.723221302	0.062104616	0.000156301	0.001260321	-0.01689537
F735	EY	4.5	-4.02690554	0.723221302	0.062104616	0.000156301	-0.09189646	-1.10172558
F735	EY	6	-4.02690554	0.723221302	0.062104616	0.000156301	-0.18505323	-2.18655586
F735	COMB1	0	-14.1498938	-6.45820045	-0.01053368	0.002818568	-0.03307262	-6.80405855
F735	COMB1	1.5	-14.1498938	-3.43421078	-0.01053368	0.002818568	-0.01727212	0.61523813
F735	COMB1	3	-14.1498938	-0.41022149	-0.01053368	0.002818568	-0.00147163	3.498557806
F735	COMB1	4.5	-14.1498938	2.613767862	-0.01053368	0.002818568	0.014328869	1.845900655
F735	COMB1	6	-14.1498938	5.637756824	-0.01053368	0.002818568	0.030129364	-4.34273291
F735	COMB2	0	-10.6012907	-5.31760693	-0.00056171	0.002544191	0.009405307	-5.09166098
F735	COMB2	1.5	-10.6012907	-2.67161608	-0.00056171	0.002544191	0.010247868	0.90024662
F735	COMB2	3	-10.6012907	-0.0256253	-0.00056171	0.002544191	0.011090429	2.923174381
F735	COMB2	4.5	-10.6012907	2.620365381	-0.00056171	0.002544191	0.011932991	0.977122426
F735	COMB2	6	-10.6012907	5.266355991	-0.00056171	0.002544191	0.012775552	-4.93790913
F735	COMB3	0	-13.5405169	-4.78770876	0.053972982	0.00261248	0.164756328	-3.51408553
F735	COMB3	1.5	-13.5405169	-2.14171815	0.053972982	0.00261248	0.083796985	1.682976365
F735	COMB3	3	-13.5405169	0.50427258	0.053972982	0.00261248	0.002837646	2.911058426
F735	COMB3	4.5	-13.5405169	3.150263309	0.053972982	0.00261248	-0.0781217	0.170160979
F735	COMB3	6	-13.5405169	5.796253681	0.053972982	0.00261248	-0.15908104	-6.53971624
F736	D	0	-7.95812988	-5.25746393	-0.00656843	-0.00110304	-0.02307731	-5.45678473
F736	D	1.5	-7.95812988	-2.73747301	-0.00656843	-0.00110304	-0.01322468	0.539408863
F736	D	3	-7.95812988	-0.21748206	-0.00656843	-0.00110304	-0.00337204	2.755621672
F736	D	4.5	-7.95812988	2.302508831	-0.00656843	-0.00110304	0.00648059	1.191854119
F736	D	6	-7.95812988	4.822499752	-0.00656843	-0.00110304	0.016333222	-4.15189409
F736	L	0	-2.1460371	-0.07414815	-0.00173996	-0.00029725	-0.00397646	-0.1263209
F736	L	1.5	-2.1460371	-0.07414815	-0.00173996	-0.00029725	-0.00136653	-0.01509884
F736	L	3	-2.1460371	-0.07414815	-0.00173996	-0.00029725	0.001243402	0.096123219
F736	L	4.5	-2.1460371	-0.07414815	-0.00173996	-0.00029725	0.003853332	0.207345262
F736	L	6	-2.1460371	-0.07414815	-0.00173996	-0.00029725	0.006463263	0.318567336
F736	EX	0	0.016626257	-0.00840409	-0.01182723	0.000101805	-0.02164438	-0.02356674
F736	EX	1.5	0.016626257	-0.00840409	-0.01182723	0.000101805	-0.00390356	-0.01096062
F736	EX	3	0.016626257	-0.00840409	-0.01182723	0.000101805	0.013837261	0.0016455
F736	EX	4.5	0.016626257	-0.00840409	-0.01182723	0.000101805	0.031578083	0.014251621
F736	EX	6	0.016626257	-0.00840409	-0.01182723	0.000101805	0.049318902	0.026857741
F736	EY	0	-3.99348974	0.678622007	0.050279438	0.000177964	0.150950775	2.01771903
F736	EY	1.5	-3.99348974	0.678622007	0.050279438	0.000177964	0.075531736	0.999787629
F736	EY	3	-3.99348974	0.678622007	0.050279438	0.000177964	0.000112692	-0.01814371
F736	EY	4.5	-3.99348974	0.678622007	0.050279438	0.000177964	-0.07530635	-1.03607512
F736	EY	6	-3.99348974	0.678622007	0.050279438	0.000177964	-0.15072538	-2.05400634
F736	COMB1	0	-12.9834146	-6.42759371	-0.01066605	-0.00179925	-0.03405511	-6.75025511
F736	COMB1	1.5	-12.9834146	-3.40360475	-0.01066605	-0.00179925	-0.01805606	0.623132527
F736	COMB1	3	-12.9834146	-0.37961552	-0.01066605	-0.00179925	-0.00205701	3.460543156
F736	COMB1	4.5	-12.9834146	2.644373655	-0.01066605	-0.00179925	0.013942039	1.761977315
F736	COMB1	6	-12.9834146	5.668363094	-0.01066605	-0.00179925	0.029941088	-4.47256517
F736	COMB2	0	-10.2727785	-5.33862638	-0.0038481	-0.0010904	-0.0003362	-5.15822554
F736	COMB2	1.5	-10.2727785	-2.69263554	-0.0038481	-0.0010904	0.005435946	0.865212023
F736	COMB2	3	-10.2727785	-0.04664515	-0.0038481	-0.0010904	0.01120809	2.91966939
F736	COMB2	4.5	-10.2727785	2.599345446	-0.0038481	-0.0010904	0.016980235	1.005147338
F736	COMB2	6	-10.2727785	5.245336056	-0.0038481	-0.0010904	0.022752378	-4.87835455
F736	COMB3	0	-13.219965	-4.83378792	0.041622892	-0.0010329	0.126196578	-3.65823388
F736	COMB3	1.5	-13.219965	-2.18779755	0.041622892	-0.0010329	0.06376233	1.607947588
F736	COMB3	3	-13.219965	0.458192974	0.041622892	-0.0010329	0.00132809	2.905148983
F736	COMB3	4.5	-13.219965	3.104183435	0.041622892	-0.0010329	-0.06110615	0.23337099

F739	EX	4.5	0.058942504	0.000154764	0.000602002	-0.001144	0.016589802	0.003930937
F739	EX	6	0.058942504	0.000154764	0.000602002	-0.001144	0.015686797	0.00369879
F739	EY	0	-1.19784832	0.696964741	-0.05477389	0.001452706	-0.15354913	1.984181762
F739	EY	1.5	-1.19784832	0.696964741	-0.05477389	0.001452706	-0.07138811	0.938732505
F739	EY	3	-1.19784832	0.696964741	-0.05477389	0.001452706	0.010772916	-0.10671692
F739	EY	4.5	-1.19784832	0.696964741	-0.05477389	0.001452706	0.092933938	-1.15216637
F739	EY	6	-1.19784832	0.696964741	-0.05477389	0.001452706	0.175094962	-2.19761586
F739	COMB1	0	-10.0883293	-5.26433325	-0.04546687	0.013569026	-0.13861603	-4.13379478
F739	COMB1	1.5	-10.0883293	-2.24033213	-0.04546687	0.013569026	-0.07041556	1.494716883
F739	COMB1	3	-10.0883293	0.783668637	-0.04546687	0.013569026	-0.0022151	2.587216854
F739	COMB1	4.5	-10.0883293	3.807669401	-0.04546687	0.013569026	0.065985359	-0.85629427
F739	COMB1	6	-10.0883293	6.831670284	-0.04546687	0.013569026	0.134185821	-8.83581734
F739	COMB2	0	-8.06505585	-4.55439854	-0.03730763	0.025867455	-0.09366577	-3.34239244
F739	COMB2	1.5	-8.06505585	-1.90839767	-0.03730763	0.025867455	-0.03770419	1.504715562
F739	COMB2	3	-8.06505585	0.737603009	-0.03730763	0.025867455	0.018257393	2.382813454
F739	COMB2	4.5	-8.06505585	3.383603811	-0.03730763	0.025867455	0.074218974	-0.70809841
F739	COMB2	6	-8.06505585	6.029604435	-0.03730763	0.025867455	0.130180553	-7.76802063
F739	COMB3	0	-8.98791313	-4.04224062	-0.07799989	0.027758874	-0.22041954	-1.88735044
F739	COMB3	1.5	-8.98791313	-1.39624	-0.07799989	0.027758874	-0.10341943	2.191519499
F739	COMB3	3	-8.98791313	1.249760628	-0.07799989	0.027758874	0.013580666	2.301379204
F739	COMB3	4.5	-8.98791313	3.89576149	-0.07799989	0.027758874	0.130580768	-1.55777097
F739	COMB3	6	-8.98791313	6.541761875	-0.07799989	0.027758874	0.247580856	-9.38593102
F740	D	0	-8.19190884	-4.48372269	-0.01587329	-0.04315979	-0.04840617	-3.70228481
F740	D	1.5	-8.19190884	-1.96372187	-0.01587329	-0.04315979	-0.02459618	1.133309007
F740	D	3	-8.19190884	0.556278884	-0.01587329	-0.04315979	-0.0007862	2.188893557
F740	D	4.5	-8.19190884	3.07627964	-0.01587329	-0.04315979	0.023023779	-0.5355314
F740	D	6	-8.19190884	5.596280098	-0.01587329	-0.04315979	0.046833761	-7.03996563
F740	L	0	-2.06451631	0.311430722	-0.01710779	-0.0244829	-0.05086285	0.67396307
F740	L	1.5	-2.06451631	0.311430722	-0.01710779	-0.0244829	-0.02520111	0.206816018
F740	L	3	-2.06451631	0.311430722	-0.01710779	-0.0244829	0.000460635	-0.26033109
F740	L	4.5	-2.06451631	0.311430722	-0.01710779	-0.0244829	0.026122376	-0.72747821
F740	L	6	-2.06451631	0.311430722	-0.01710779	-0.0244829	0.051784121	-1.19462538
F740	EX	0	-0.03250397	-0.00029732	0.011571777	0.000144202	0.038429212	-0.00208736
F740	EX	1.5	-0.03250397	-0.00029732	0.011571777	0.000144202	0.021071505	-0.00164137
F740	EX	3	-0.03250397	-0.00029732	0.011571777	0.000144202	0.003713801	-0.00119538
F740	EX	4.5	-0.03250397	-0.00029732	0.011571777	0.000144202	-0.0136439	-0.0007494
F740	EX	6	-0.03250397	-0.00029732	0.011571777	0.000144202	-0.03100161	-0.00030341
F740	EY	0	-1.24370599	0.753724039	-0.07492144	0.00190467	-0.20448311	2.143061399
F740	EY	1.5	-1.24370599	0.753724039	-0.07492144	0.00190467	-0.09210067	1.012472749
F740	EY	3	-1.24370599	0.753724039	-0.07492144	0.00190467	0.020281756	-0.11811581
F740	EY	4.5	-1.24370599	0.753724039	-0.07492144	0.00190467	0.132664174	-1.24870431
F740	EY	6	-1.24370599	0.753724039	-0.07492144	0.00190467	0.245046616	-2.37929296
F740	COMB1	0	-13.1335163	-4.88217783	-0.04642041	-0.09096439	-0.13946795	-3.36440086
F740	COMB1	1.5	-13.1335163	-1.85817707	-0.04642041	-0.09096439	-0.06983719	1.690876484
F740	COMB1	3	-13.1335163	1.165823817	-0.04642041	-0.09096439	-0.00020643	2.210142612
F740	COMB1	4.5	-13.1335163	4.189824581	-0.04642041	-0.09096439	0.069424339	-1.80660284
F740	COMB1	6	-13.1335163	7.213825226	-0.04642041	-0.09096439	0.139055103	-10.3593597
F740	COMB2	0	-9.6772356	-4.37269258	-0.03367937	-0.05228068	-0.09148622	-3.00219679
F740	COMB2	1.5	-9.6772356	-1.72669184	-0.03367937	-0.05228068	-0.04096704	1.572351575
F740	COMB2	3	-9.6772356	0.919308841	-0.03367937	-0.05228068	0.009552125	2.177890301
F740	COMB2	4.5	-9.6772356	3.565309525	-0.03367937	-0.05228068	0.060071293	-1.18558109
F740	COMB2	6	-9.6772356	6.211310387	-0.03367937	-0.05228068	0.110590465	-8.51806259
F740	COMB3	0	-10.5679569	-3.81849122	-0.09707832	-0.05098457	-0.26945034	-1.42554379
F740	COMB3	1.5	-10.5679569	-1.1724906	-0.09707832	-0.05098457	-0.12383252	2.317700863
F740	COMB3	3	-10.5679569	1.473510146	-0.09707832	-0.05098457	0.02178528	2.091935873
F740	COMB3	4.5	-10.5679569	4.119510651	-0.09707832	-0.05098457	0.167403072	-2.10283923
F740	COMB3	6	-10.5679569	6.765511513	-0.09707832	-0.05098457	0.313020885	-10.2666245
F741	D	0	-8.24107647	-4.47498417	0.000395747	0.024097813	0.002531427	-3.6883359
F741	D	1.5	-8.24107647	-1.95498359	0.000395747	0.024097813	0.001937805	1.134150863
F741	D	3	-8.24107647	0.565016985	0.000395747	0.024097813	0.001344182	2.176628113
F741	D	4.5	-8.24107647	3.085017681	0.000395747	0.024097813	0.00075056	-0.56090397
F741	D	6	-8.24107647	5.605018616	0.000395747	0.024097813	0.000156937	-7.07844543
F741	L	0	-2.75397205	0.420600116	0.00725594	0.017305495	0.021763813	0.912802637
F741	L	1.5	-2.75397205	0.420600116	0.00725594	0.017305495	0.010879877	0.281901032
F741	L	3	-2.75397205	0.420600116	0.00725594	0.017305495	-4.0571E-06	-0.34900057
F741	L	4.5	-2.75397205	0.420600116	0.00725594	0.017305495	-0.01088799	-0.97990215
F741	L	6	-2.75397205	0.420600116	0.00725594	0.017305495	-0.02177193	-1.61080384
F741	EX	0	-0.00520137	0.001341608	0.010374026	-0.00076919	0.033119	0.00476095
F741	EX	1.5	-0.00520137	0.001341608	0.010374026	-0.00076919	0.017557926	0.002748534
F741	EX	3	-0.00520137	0.001341608	0.010374026	-0.00076919	0.001996853	0.000736118
F741	EX	4.5	-0.00520137	0.001341608	0.010374026	-0.00076919	-0.01356422	-0.0012763
F741	EX	6	-0.00520137	0.001341608	0.010374026	-0.00076919	-0.02912529	-0.00328871
F741	EY	0	-1.24370623	0.75372386	0.074921004	-0.00190466	0.20448187	2.143060923
F741	EY	1.5	-1.24370623	0.75372386	0.074921004	-0.00190466	0.092100106	1.01247251
F741	EY	3	-1.24370623	0.75372386	0.074921004	-0.00190466	-0.02028166	-0.1181158
F741	EY	4.5	-1.24370623	0.75372386	0.074921004	-0.00190466	-0.13266343	-1.24870408
F741	EY	6	-1.24370623	0.75372386	0.074921004	-0.00190466	-0.2450452	-2.37929249
F741	COMB1	0	-14.2956476	-4.69702101	0.012084401	0.05660617	0.037859812	-2.96551871
F741	COMB1	1.5	-14.2956476	-1.67302012	0.012084401	0.05660617	0.01973317	1.812022686
F741	COMB1	3	-14.2956476	1.350980639	0.012084401	0.05660617	0.001606527	2.053552866
F741	COMB1	4.5	-14.2956476	4.374981403	0.012084401	0.05660617	-0.01652011	-2.24092817
F741	COMB1	6	-14.2956476	7.398982525	0.012084401	0.05660617	-0.03464676	-11.0714207
F741	COMB2	0	-9.91778278	-4.32743263	0.03703839	0.02935786	0.108203553	-2.9052279
F741	COMB2	1.5	-9.91778278	-1.68143225	0.03703839	0.02935786	0.052645843	1.601430774

F741	COMB2	3	-9.91778278	0.964568496	0.03703839	0.02935786	-0.00291187	2.139079809
F741	COMB2	4.5	-9.91778278	3.610569239	0.03703839	0.02935786	-0.05846958	-1.29228115
F741	COMB2	6	-9.91778278	6.256569862	0.03703839	0.02935786	-0.11402729	-8.69265175
F741	COMB3	0	-10.8281612	-3.77441168	0.084636033	0.028511753	0.234652042	-1.33350611
F741	COMB3	1.5	-10.8281612	-1.12841117	0.084636033	0.028511753	0.107697718	2.343619108
F741	COMB3	3	-10.8281612	1.517589569	0.084636033	0.028511753	-0.01925662	2.051734686
F741	COMB3	4.5	-10.8281612	4.163590431	0.084636033	0.028511753	-0.14621095	-2.20915961
F741	COMB3	6	-10.8281612	6.809590816	0.084636033	0.028511753	-0.27316529	-10.439064
F742	D	0	-8.07110214	-4.4378047	-0.00085647	-0.04723851	0.001396129	-3.5338552
F742	D	1.5	-8.07110214	-1.91780388	-0.00085647	-0.04723851	0.002680844	1.232862115
F742	D	3	-8.07110214	0.602196693	-0.00085647	-0.04723851	0.00396556	2.219569683
F742	D	4.5	-8.07110214	3.122197151	-0.00085647	-0.04723851	0.005250275	-0.57373208
F742	D	6	-8.07110214	5.642198086	-0.00085647	-0.04723851	0.00653499	-7.14704323
F742	L	0	-2.06574416	0.324166179	0.008201118	0.005285731	0.023644103	0.702759564
F742	L	1.5	-2.06574416	0.324166179	0.008201118	0.005285731	0.011342399	0.216509223
F742	L	3	-2.06574416	0.324166179	0.008201118	0.005285731	-0.0009593	-0.26974115
F742	L	4.5	-2.06574416	0.324166179	0.008201118	0.005285731	-0.01326101	-0.75599152
F742	L	6	-2.06574416	0.324166179	0.008201118	0.005285731	-0.02556271	-1.24224186
F742	EX	0	-0.01966104	-0.00144295	0.012087213	-0.0008907	0.035971597	-0.0077308
F742	EX	1.5	-0.01966104	-0.00144295	0.012087213	-0.0008907	0.017840736	-0.00556638
F742	EX	3	-0.01966104	-0.00144295	0.012087213	-0.0008907	-0.00029012	-0.00340195
F742	EX	4.5	-0.01966104	-0.00144295	0.012087213	-0.0008907	-0.01842098	-0.00123753
F742	EX	6	-0.01966104	-0.00144295	0.012087213	-0.0008907	-0.03655184	0.000926894
F742	EY	0	-1.19784784	0.6969648	0.054773498	-0.00145269	0.153548002	1.984182239
F742	EY	1.5	-1.19784784	0.6969648	0.054773498	-0.00145269	0.071387582	0.938732624
F742	EY	3	-1.19784784	0.6969648	0.054773498	-0.00145269	-0.01077285	-0.10671693
F742	EY	4.5	-1.19784784	0.6969648	0.054773498	-0.00145269	-0.09293328	-1.15216649
F742	EY	6	-1.19784784	0.6969648	0.054773498	-0.00145269	-0.17509371	-2.19761586
F742	COMB1	0	-12.9905128	-4.80669975	0.012094018	-0.04822904	0.039505921	-3.1162107
F742	COMB1	1.5	-12.9905128	-1.78269887	0.012094018	-0.04822904	0.021364853	1.825849295
F742	COMB1	3	-12.9905128	1.241301894	0.012094018	-0.04822904	0.003223785	2.231897831
F742	COMB1	4.5	-12.9905128	4.265302658	0.012094018	-0.04822904	-0.01491728	-1.89806485
F742	COMB1	6	-12.9905128	7.28930378	0.012094018	-0.04822904	-0.03305835	-10.5640392
F742	COMB2	0	-9.52303791	-4.3395319	0.031447969	-0.0493149	0.094512053	-2.87216258
F742	COMB2	1.5	-9.52303791	-1.69353127	0.031447969	-0.0493149	0.047339991	1.652645111
F742	COMB2	3	-9.52303791	0.952469349	0.031447969	-0.0493149	0.00016793	2.208442926
F742	COMB2	4.5	-9.52303791	3.598469973	0.031447969	-0.0493149	-0.04700413	-1.20476925
F742	COMB2	6	-9.52303791	6.244471073	0.031447969	-0.0493149	-0.0941762	-8.58699131
F742	COMB3	0	-10.3893003	-3.82622385	0.063003697	-0.04974132	0.18147029	-1.40822244
F742	COMB3	1.5	-10.3893003	-1.18022323	0.063003697	-0.04974132	0.086964533	2.346621513
F742	COMB3	3	-10.3893003	1.465777397	0.063003697	-0.04974132	-0.00754123	2.132455349
F742	COMB3	4.5	-10.3893003	4.111777782	0.063003697	-0.04974132	-0.10204698	-2.05072069
F742	COMB3	6	-10.3893003	6.757779121	0.063003697	-0.04974132	-0.19655274	-10.2029066
F743	D	0	-19.7127228	-19.0176067	0.017298657	-0.06733665	0.04707022	-27.662302
F743	D	1.25	-19.7127228	-16.3176136	0.017298657	-0.06733665	0.025446899	-5.57778978
F743	D	2.5	-19.7127228	-13.6176176	0.017298657	-0.06733665	0.003823578	13.13173008
F743	D	3.75	-19.7127228	-10.9176226	0.017298657	-0.06733665	-0.01779974	28.4662571
F743	D	5	-19.7127228	-8.21762848	0.017298657	-0.06733665	-0.03942307	40.42578888
F743	L	0	-0.72532433	0.117696457	0.013956191	-0.04923357	0.03402584	-0.09995639
F743	L	1.25	-0.72532433	0.117696457	0.013956191	-0.04923357	0.016580602	-0.24707697
F743	L	2.5	-0.72532433	0.117696457	0.013956191	-0.04923357	-0.00086464	-0.39419755
F743	L	3.75	-0.72532433	0.117696457	0.013956191	-0.04923357	-0.01830988	-0.54131812
F743	L	5	-0.72532433	0.117696457	0.013956191	-0.04923357	-0.03575512	-0.68843871
F743	EX	0	-3.77620006	2.176862717	-0.02780526	0.000152095	-0.08864904	4.976382256
F743	EX	1.25	-3.77620006	2.176862717	-0.02780526	0.000152095	-0.05389247	2.255303621
F743	EX	2.5	-3.77620006	2.176862717	-0.02780526	0.000152095	-0.0191359	-0.46577498
F743	EX	3.75	-3.77620006	2.176862717	-0.02780526	0.000152095	0.015620679	-3.18685341
F743	EX	5	-3.77620006	2.176862717	-0.02780526	0.000152095	0.050377253	-5.90793228
F743	EY	0	0.004757103	0.033843469	0.075781435	-0.01867714	0.212390289	0.081003711
F743	EY	1.25	0.004757103	0.033843469	0.075781435	-0.01867714	0.117663473	0.03869937
F743	EY	2.5	0.004757103	0.033843469	0.075781435	-0.01867714	0.022936676	-0.00360497
F743	EY	3.75	0.004757103	0.033843469	0.075781435	-0.01867714	-0.07179013	-0.04590931
F743	EY	5	0.004757103	0.033843469	0.075781435	-0.01867714	-0.16651693	-0.08821364
F743	COMB1	0	-24.8157845	-22.6328144	0.043088295	-0.15957768	0.110925607	-33.3546944
F743	COMB1	1.25	-24.8157845	-19.3928204	0.043088295	-0.15957768	0.057065245	-7.08867073
F743	COMB1	2.5	-24.8157845	-16.1528263	0.043088295	-0.15957768	0.003204876	15.12736034
F743	COMB1	3.75	-24.8157845	-12.9128332	0.043088295	-0.15957768	-0.0506555	33.29339981
F743	COMB1	5	-24.8157845	-9.67284012	0.043088295	-0.15957768	-0.10451587	47.4094429
F743	COMB2	0	-24.833704	-17.6676998	0.017652499	-0.09193794	0.03529305	-23.9008312
F743	COMB2	1.25	-24.833704	-14.8327055	0.017652499	-0.09193794	0.013227419	-3.58807898
F743	COMB2	2.5	-24.833704	-11.9977112	0.017652499	-0.09193794	-0.0088382	13.18093109
F743	COMB2	3.75	-24.833704	-9.16271591	0.017652499	-0.09193794	-0.03090383	26.40620041
F743	COMB2	5	-24.833704	-6.32772207	0.017652499	-0.09193794	-0.05296946	36.08772278
F743	COMB3	0	-22.1113434	-19.210165	0.093371645	-0.10577515	0.255227208	-27.4242897
F743	COMB3	1.25	-22.1113434	-16.3751717	0.093371645	-0.10577515	0.138512656	-5.18345356
F743	COMB3	2.5	-22.1113434	-13.5401773	0.093371645	-0.10577515	0.021798098	13.51363945
F743	COMB3	3.75	-22.1113434	-10.7051821	0.093371645	-0.10577515	-0.09491646	28.66699219
F743	COMB3	5	-22.1113434	-7.87018824	0.093371645	-0.10577515	-0.21163101	40.27659607
F744	D	0	-19.6836491	8.22684288	-0.00106263	0.026561458	0.000962076	40.46496582
F744	D	1.25	-19.6836491	10.92683792	-0.00106263	0.026561458	0.002290367	28.49391747
F744	D	2.5	-19.6836491	13.62683201	-0.00106263	0.026561458	0.003618658	13.14787388
F744	D	3.75	-19.6836491	16.3268261	-0.00106263	0.026561458	0.004946949	-5.57316446
F744	D	5	-19.6836491	19.02682304	-0.00106263	0.026561458	0.006275241	-27.6691952
F744	L	0	-0.73518836	-0.1023969	-0.00363172	0.032235306	-0.01044333	-0.65561944

F744	L	1.25	-0.73518836	-0.1023969	-0.00363172	0.032235306	-0.00590368	-0.5276233
F744	L	2.5	-0.73518836	-0.1023969	-0.00363172	0.032235306	-0.00136404	-0.39962718
F744	L	3.75	-0.73518836	-0.1023969	-0.00363172	0.032235306	0.003175612	-0.27163103
F744	L	5	-0.73518836	-0.1023969	-0.00363172	0.032235306	0.00771526	-0.14363493
F744	EX	0	-2.51881075	2.163813353	0.005678145	0.001169567	0.011106852	5.694314957
F744	EX	1.25	-2.51881075	2.163813353	0.005678145	0.001169567	0.00400917	2.989548206
F744	EX	2.5	-2.51881075	2.163813353	0.005678145	0.001169567	-0.00308851	0.284781337
F744	EX	3.75	-2.51881075	2.163813353	0.005678145	0.001169567	-0.01018619	-2.41998529
F744	EX	5	-2.51881075	2.163813353	0.005678145	0.001169567	-0.01728388	-5.12475252
F744	EY	0	0.004757046	-0.0338433	-0.07578088	0.018677061	-0.16651559	-0.08821325
F744	EY	1.25	0.004757046	-0.0338433	-0.07578088	0.018677061	-0.07178949	-0.04590911
F744	EY	2.5	0.004757046	-0.0338433	-0.07578088	0.018677061	0.022936618	-0.00360498
F744	EY	3.75	0.004757046	-0.0338433	-0.07578088	0.018677061	0.117662728	0.038699158
F744	EY	5	0.004757046	-0.0338433	-0.07578088	0.018677061	0.212388828	0.081003293
F744	COMB1	0	-24.7966785	9.708375931	-0.00708591	0.083450243	-0.01555484	47.50896835
F744	COMB1	1.25	-24.7966785	12.94837093	-0.00708591	0.083450243	-0.00669745	33.34850311
F744	COMB1	2.5	-24.7966785	16.18836403	-0.00708591	0.083450243	0.002159932	15.13804436
F744	COMB1	3.75	-24.7966785	19.42835617	-0.00708591	0.083450243	0.011017319	-7.12240696
F744	COMB1	5	-24.7966785	22.66835213	-0.00708591	0.083450243	0.019874705	-33.4328499
F744	COMB2	0	-23.5048866	10.83481598	-0.02025385	0.045137428	-0.04323629	48.14752579
F744	COMB2	1.25	-23.5048866	13.66981125	-0.02025385	0.045137428	-0.01791897	32.83213425
F744	COMB2	2.5	-23.5048866	16.50480461	-0.02025385	0.045137428	0.007398345	13.97299767
F744	COMB2	3.75	-23.5048866	19.33979988	-0.02025385	0.045137428	0.032715663	-8.4298811
F744	COMB2	5	-23.5048866	22.17479515	-0.02025385	0.045137428	0.058032978	-34.376503
F744	COMB3	0	-21.6878452	9.251995087	-0.08004107	0.05802298	-0.17362219	43.98278046
F744	COMB3	1.25	-21.6878452	12.08699036	-0.08004107	0.05802298	-0.07357085	30.64591599
F744	COMB3	2.5	-21.6878452	14.92198372	-0.08004107	0.05802298	0.026480488	13.76530552
F744	COMB3	3.75	-21.6878452	17.75697899	-0.08004107	0.05802298	0.126531824	-6.6590476
F744	COMB3	5	-21.6878452	20.59197426	-0.08004107	0.05802298	0.226583153	-30.6271439
F745	D	0	-53.0984001	-20.9199963	-1.2346E-16	0	2.00701E-16	-46.8607521
F745	D	1.120000005	-50.679203	-20.9199963	-1.2346E-16	0	3.3898E-16	-23.4303761
F745	D	2.24000001	-48.260006	-20.9199963	-1.2346E-16	0	4.77258E-16	-1.3947E-14
F745	L	0	0	0	1.54329E-17	0	2.00701E-16	0
F745	L	1.120000005	0	0	1.54329E-17	0	1.83417E-16	0
F745	L	2.24000001	0	0	1.54329E-17	0	1.66132E-16	0
F745	EX	0	0	3.16065E-14	0	0	0	0
F745	EX	1.120000005	0	3.16065E-14	0	0	0	-3.5399E-14
F745	EX	2.24000001	0	3.16065E-14	0	0	0	-7.0799E-14
F745	EY	0	0	3.08657E-17	0	0	0	5.01753E-17
F745	EY	1.120000005	0	3.08657E-17	0	0	0	1.56057E-17
F745	EY	2.24000001	0	3.08657E-17	0	0	0	-1.8964E-17
F745	COMB1	0	-63.7180824	-25.1039963	-1.2346E-16	0	5.61964E-16	-56.2329025
F745	COMB1	1.120000005	-60.8150444	-25.1039963	-1.2346E-16	0	7.00242E-16	-28.1164513
F745	COMB1	2.24000001	-57.9120102	-25.1039963	-1.2346E-16	0	8.38521E-16	-1.6737E-14
F745	COMB2	0	-55.7533226	-21.9659958	-1.2477E-16	0	2.73957E-16	-49.2037888
F745	COMB2	1.120000005	-53.2131615	-21.9659958	-1.2477E-16	0	4.13705E-16	-24.6018944
F745	COMB2	2.24000001	-50.673008	-21.9659958	-1.2477E-16	0	5.53453E-16	-8.7927E-14
F745	COMB3	0	-55.7533226	-21.9659958	-1.2477E-16	0	2.73957E-16	-49.2037888
F745	COMB3	1.120000005	-53.2131615	-21.9659958	-1.2477E-16	0	4.13705E-16	-24.6018944
F745	COMB3	2.24000001	-50.673008	-21.9659958	-1.2477E-16	0	5.53453E-16	-3.6966E-14
F746	D	0	-53.0984001	20.91999626	0	0	2.00701E-16	46.86075211
F746	D	1.120000005	-50.679203	20.91999626	0	0	2.00701E-16	23.43037605
F746	D	2.24000001	-48.260006	20.91999626	0	0	2.00701E-16	-1.417E-14
F746	L	0	0	-2.4693E-16	0	0	4.01403E-16	0
F746	L	1.120000005	0	-2.4693E-16	0	0	4.01403E-16	2.76557E-16
F746	L	2.24000001	0	-2.4693E-16	0	0	4.01403E-16	5.53114E-16
F746	EX	0	0	-3.1607E-14	0	0	0	0
F746	EX	1.120000005	0	-3.1607E-14	0	0	0	3.53993E-14
F746	EX	2.24000001	0	-3.1607E-14	0	0	0	7.07985E-14
F746	EY	0	0	0	-3.1607E-14	0	0	0
F746	EY	1.120000005	0	0	-3.1607E-14	0	3.53993E-14	0
F746	EY	2.24000001	0	0	-3.1607E-14	0	7.07985E-14	0
F746	COMB1	0	-63.7180824	25.10399628	0	0	8.83086E-16	56.23290253
F746	COMB1	1.120000005	-60.8150444	25.10399628	0	0	8.83086E-16	28.11645126
F746	COMB1	2.24000001	-57.9120102	25.10399628	0	0	8.83086E-16	-1.6119E-14
F746	COMB2	0	-55.7533226	21.96599579	-9.9561E-15	0	3.37178E-16	49.20378876
F746	COMB2	1.120000005	-53.2131615	21.96599579	-9.9561E-15	0	1.14879E-14	24.60189438
F746	COMB2	2.24000001	-50.673008	21.96599579	-9.9561E-15	0	2.26387E-14	5.85724E-14
F746	COMB3	0	-55.7533226	21.96599579	-3.3187E-14	0	3.37178E-16	49.20378876
F746	COMB3	1.120000005	-53.2131615	21.96599579	-3.3187E-14	0	3.75064E-14	24.60189438
F746	COMB3	2.24000001	-50.673008	21.96599579	-3.3187E-14	0	7.46757E-14	7.59745E-15
F747	D	0	-53.0984001	-20.9199963	-4.9385E-16	0	-4.014E-16	-46.8607521
F747	D	1.120000005	-50.679203	-20.9199963	-4.9385E-16	0	1.51711E-16	-23.4303761
F747	D	2.24000001	-48.260006	-20.9199963	-4.9385E-16	0	7.04824E-16	3.26532E-14
F747	L	0	0	0	0	0	0	0
F747	L	1.120000005	0	0	0	0	0	0
F747	L	2.24000001	0	0	0	0	0	0
F747	EX	0	0	3.16065E-14	-2.4693E-16	0	0	5.13796E-14
F747	EX	1.120000005	0	3.16065E-14	-2.4693E-16	0	2.76557E-16	1.59803E-14
F747	EX	2.24000001	0	3.16065E-14	-2.4693E-16	0	5.53114E-16	-1.9419E-14
F747	EY	0	0	6.17315E-17	0	0	0	1.00351E-16
F747	EY	1.120000005	0	6.17315E-17	0	0	0	3.12115E-17
F747	EY	2.24000001	0	6.17315E-17	0	0	0	-3.7928E-17
F747	COMB1	0	-63.7180824	-25.1039963	-5.9262E-16	0	-4.8168E-16	-56.2329025

F747	COMB1	1.120000005	-60.8150444	-25.1039963	-5.9262E-16	0	1.82053E-16	-28.1164513
F747	COMB1	2.24000001	-57.9120102	-25.1039963	-5.9262E-16	0	8.45789E-16	3.91838E-14
F747	COMB2	0	-55.7533226	-21.9659958	-7.7411E-16	0	-4.2147E-16	-49.2037888
F747	COMB2	1.120000005	-53.2131615	-21.9659958	-7.7411E-16	0	4.45533E-16	-24.6018944
F747	COMB2	2.24000001	-50.673008	-21.9659958	-7.7411E-16	0	1.31254E-15	1.41752E-14
F747	COMB3	0	-55.7533226	-21.9659958	-5.9633E-16	0	-4.2147E-16	-49.2037888
F747	COMB3	1.120000005	-53.2131615	-21.9659958	-5.9633E-16	0	2.46412E-16	-24.6018944
F747	COMB3	2.24000001	-50.673008	-21.9659958	-5.9633E-16	0	9.14296E-16	2.8129E-14
F748	D	0	-53.0984001	20.91999626	0	0	-4.014E-16	46.86075211
F748	D	1.120000005	-50.679203	20.91999626	0	0	-4.014E-16	23.43037605
F748	D	2.24000001	-48.260006	20.91999626	0	0	-4.014E-16	-1.9808E-14
F748	L	0	0	-4.9385E-16	0	0	-4.014E-16	0
F748	L	1.120000005	0	-4.9385E-16	0	0	-4.014E-16	5.53114E-16
F748	L	2.24000001	0	-4.9385E-16	0	0	-4.014E-16	1.10623E-15
F748	EX	0	0	3.16065E-14	-2.4693E-16	0	-4.014E-16	5.13796E-14
F748	EX	1.120000005	0	3.16065E-14	-2.4693E-16	0	-1.2485E-16	1.59803E-14
F748	EX	2.24000001	0	3.16065E-14	-2.4693E-16	0	1.51711E-16	-1.9419E-14
F748	EY	0	0	0	0	0	2.56898E-14	0
F748	EY	1.120000005	0	0	0	0	2.56898E-14	0
F748	EY	2.24000001	0	0	0	0	2.56898E-14	0
F748	COMB1	0	-63.7180824	25.10399628	0	0	-1.1239E-15	56.23290253
F748	COMB1	1.120000005	-60.8150444	25.10399628	0	0	-1.1239E-15	28.11645126
F748	COMB1	2.24000001	-57.9120102	25.10399628	0	0	-1.1239E-15	-2.2E-14
F748	COMB2	0	-55.7533226	21.96599579	-2.5557E-16	0	7.12891E-15	49.20378876
F748	COMB2	1.120000005	-53.2131615	21.96599579	-2.5557E-16	0	7.41515E-15	24.60189438
F748	COMB2	2.24000001	-50.673008	21.96599579	-2.5557E-16	0	7.70139E-15	-4.0549E-14
F748	COMB3	0	-55.7533226	21.96599579	-7.7782E-17	0	2.62999E-14	49.20378876
F748	COMB3	1.120000005	-53.2131615	21.96599579	-7.7782E-17	0	2.6387E-14	24.60189438
F748	COMB3	2.24000001	-50.673008	21.96599579	-7.7782E-17	0	2.64741E-14	-2.6567E-14
F749	D	0	-53.0984001	-20.9199963	-1.2346E-16	0	1.00351E-16	-46.8607521
F749	D	1.120000005	-50.679203	-20.9199963	-1.2346E-16	0	2.38629E-16	-23.4303761
F749	D	2.24000001	-48.260006	-20.9199963	-1.2346E-16	0	3.76908E-16	-1.1023E-15
F749	L	0	0	0	1.23463E-16	0	1.00351E-16	-1.6056E-15
F749	L	1.120000005	0	0	1.23463E-16	0	-3.7928E-17	-1.6056E-15
F749	L	2.24000001	0	0	1.23463E-16	0	-1.7621E-16	-1.6056E-15
F749	EX	0	0	0	0	0	0	0
F749	EX	1.120000005	0	0	0	0	0	0
F749	EX	2.24000001	0	0	0	0	0	0
F749	EY	0	0	3.08657E-17	-3.1607E-14	0	-2.569E-14	0
F749	EY	1.120000005	0	3.08657E-17	-3.1607E-14	0	9.70949E-15	-3.457E-17
F749	EY	2.24000001	0	3.08657E-17	-3.1607E-14	0	4.51088E-14	-6.9139E-17
F749	COMB1	0	-63.7180824	-25.1039963	4.93852E-17	0	2.80982E-16	-56.2329025
F749	COMB1	1.120000005	-60.8150444	-25.1039963	4.93852E-17	0	2.25671E-16	-28.1164513
F749	COMB1	2.24000001	-57.9120102	-25.1039963	4.93852E-17	0	1.70359E-16	-3.8917E-15
F749	COMB2	0	-55.7533226	-21.9659958	-1.0047E-14	0	-7.9553E-15	-49.2037888
F749	COMB2	1.120000005	-53.2131615	-21.9659958	-1.0047E-14	0	3.2971E-15	-24.6018944
F749	COMB2	2.24000001	-50.673008	-21.9659958	-1.0047E-14	0	1.45495E-14	-1.685E-15
F749	COMB3	0	-55.7533226	-21.9659958	-3.3278E-14	0	-2.6837E-14	-49.2037888
F749	COMB3	1.120000005	-53.2131615	-21.9659958	-3.3278E-14	0	1.04336E-14	-24.6018944
F749	COMB3	2.24000001	-50.673008	-21.9659958	-3.3278E-14	0	4.77044E-14	-1.7358E-15
F750	D	0	-53.0984001	20.91999626	0	0	0	46.86075211
F750	D	1.120000005	-50.679203	20.91999626	0	0	0	23.43037605
F750	D	2.24000001	-48.260006	20.91999626	0	0	0	-1.1743E-14
F750	L	0	0	0	-1.2346E-16	0	0	8.02806E-16
F750	L	1.120000005	0	0	-1.2346E-16	0	1.38278E-16	8.02806E-16
F750	L	2.24000001	0	0	-1.2346E-16	0	2.76557E-16	8.02806E-16
F750	EX	0	0	0	-2.4693E-16	0	-4.014E-16	0
F750	EX	1.120000005	0	0	-2.4693E-16	0	-1.2485E-16	0
F750	EX	2.24000001	0	0	-2.4693E-16	0	1.51711E-16	0
F750	EY	0	0	0	0	0	0	0
F750	EY	1.120000005	0	0	0	0	0	0
F750	EY	2.24000001	0	0	0	0	0	0
F750	COMB1	0	-63.7180824	25.10399628	-1.9754E-16	0	0	56.23290253
F750	COMB1	1.120000005	-60.8150444	25.10399628	-1.9754E-16	0	2.21245E-16	28.11645126
F750	COMB1	2.24000001	-57.9120102	25.10399628	-1.9754E-16	0	4.42491E-16	-1.2807E-14
F750	COMB2	0	-55.7533226	21.96599579	-2.9446E-16	0	-4.1545E-16	49.20378876
F750	COMB2	1.120000005	-53.2131615	21.96599579	-2.9446E-16	0	-8.5658E-17	24.60189438
F750	COMB2	2.24000001	-50.673008	21.96599579	-2.9446E-16	0	2.44136E-16	-1.2077E-14
F750	COMB3	0	-55.7533226	21.96599579	-1.1667E-16	0	-1.2644E-16	49.20378876
F750	COMB3	1.120000005	-53.2131615	21.96599579	-1.1667E-16	0	4.23121E-18	24.60189438
F750	COMB3	2.24000001	-50.673008	21.96599579	-1.1667E-16	0	1.34904E-16	-1.2077E-14
F751	D	0	-53.0984001	-20.9199963	6.17315E-17	0	0	-46.8607521
F751	D	1.120000005	-50.679203	-20.9199963	6.17315E-17	0	-6.9139E-17	-23.4303761
F751	D	2.24000001	-48.260006	-20.9199963	6.17315E-17	0	-1.3828E-16	1.41698E-14
F751	L	0	0	-9.877E-16	0	0	-1.0035E-16	-1.6056E-15
F751	L	1.120000005	0	-9.877E-16	0	0	-1.0035E-16	-4.9938E-16
F751	L	2.24000001	0	-9.877E-16	0	0	-1.0035E-16	6.06843E-16
F751	EX	0	0	3.16065E-14	0	0	0	0
F751	EX	1.120000005	0	3.16065E-14	0	0	0	-3.5399E-14
F751	EX	2.24000001	0	3.16065E-14	0	0	0	-7.0799E-14
F751	EY	0	0	0	0	0	0	-3.136E-18
F751	EY	1.120000005	0	0	0	0	0	-3.136E-18
F751	EY	2.24000001	0	0	0	0	0	-3.136E-18
F751	COMB1	0	-63.7180824	-25.1039963	7.40778E-17	0	-1.6056E-16	-56.2329025

F751	COMB1	1.120000005	-60.8150444	-25.1039963	7.40778E-17	0	-2.4353E-16	-28.1164513
F751	COMB1	2.24000001	-57.9120102	-25.1039963	7.40778E-17	0	-3.265E-16	1.79747E-14
F751	COMB2	0	-55.7533226	-21.9659958	6.48181E-17	0	-3.161E-17	-49.2037888
F751	COMB2	1.120000005	-53.2131615	-21.9659958	6.48181E-17	0	-1.0421E-16	-24.6018944
F751	COMB2	2.24000001	-50.673008	-21.9659958	6.48181E-17	0	-1.768E-16	-5.8208E-14
F751	COMB3	0	-55.7533226	-21.9659958	6.48181E-17	0	-3.161E-17	-49.2037888
F751	COMB3	1.120000005	-53.2131615	-21.9659958	6.48181E-17	0	-1.0421E-16	-24.6018944
F751	COMB3	2.24000001	-50.673008	-21.9659958	6.48181E-17	0	-1.768E-16	-7.2354E-15
F752	D	0	-53.0984001	20.91999626	0	0	5.01753E-17	46.86075211
F752	D	1.120000005	-50.679203	20.91999626	0	0	5.01753E-17	23.43037605
F752	D	2.24000001	-48.260006	20.91999626	0	0	5.01753E-17	-1.3249E-15
F752	L	0	0	-4.9385E-16	6.17315E-17	0	1.00351E-16	0
F752	L	1.120000005	0	-4.9385E-16	6.17315E-17	0	3.12115E-17	5.53114E-16
F752	L	2.24000001	0	-4.9385E-16	6.17315E-17	0	-3.7928E-17	1.10623E-15
F752	EX	0	0	3.16065E-14	0	0	0	0
F752	EX	1.120000005	0	3.16065E-14	0	0	0	-3.5399E-14
F752	EX	2.24000001	0	3.16065E-14	0	0	0	-7.0799E-14
F752	EY	0	0	0	-3.1607E-14	0	-2.569E-14	0
F752	EY	1.120000005	0	0	-3.1607E-14	0	9.70949E-15	0
F752	EY	2.24000001	0	0	-3.1607E-14	0	4.51088E-14	0
F752	COMB1	0	-63.7180824	25.10399628	9.87704E-17	0	2.20772E-16	56.23290253
F752	COMB1	1.120000005	-60.8150444	25.10399628	9.87704E-17	0	1.10149E-16	28.11645126
F752	COMB1	2.24000001	-57.9120102	25.10399628	9.87704E-17	0	-4.7391E-19	1.80032E-16
F752	COMB2	0	-55.7533226	21.96599579	-9.9366E-15	0	-8.008E-15	49.20378876
F752	COMB2	1.120000005	-53.2131615	21.96599579	-9.9366E-15	0	3.12101E-15	24.60189438
F752	COMB2	2.24000001	-50.673008	21.96599579	-9.9366E-15	0	1.425E-14	-7.4319E-14
F752	COMB3	0	-55.7533226	21.96599579	-3.3167E-14	0	-2.689E-14	49.20378876
F752	COMB3	1.120000005	-53.2131615	21.96599579	-3.3167E-14	0	1.02575E-14	24.60189438
F752	COMB3	2.24000001	-50.673008	21.96599579	-3.3167E-14	0	4.74049E-14	-2.3344E-14
F753	D	0	-53.0984001	-20.9199963	0	0	-5.0175E-17	-46.8607521
F753	D	1.120000005	-50.679203	-20.9199963	0	0	-5.0175E-17	-23.4303761
F753	D	2.24000001	-48.260006	-20.9199963	0	0	-5.0175E-17	-1.9586E-14
F753	L	0	0	0	6.17315E-17	0	0	0
F753	L	1.120000005	0	0	6.17315E-17	0	-6.9139E-17	0
F753	L	2.24000001	0	0	6.17315E-17	0	-1.3828E-16	0
F753	EX	0	0	3.16065E-14	0	0	4.01403E-16	0
F753	EX	1.120000005	0	3.16065E-14	0	0	4.01403E-16	-3.5399E-14
F753	EX	2.24000001	0	3.16065E-14	0	0	4.01403E-16	-7.0799E-14
F753	EY	0	0	1.50712E-20	0	0	0	7.3499E-20
F753	EY	1.120000005	0	1.50712E-20	0	0	0	5.66194E-20
F753	EY	2.24000001	0	1.50712E-20	0	0	0	3.97397E-20
F753	COMB1	0	-63.7180824	-25.1039963	9.87704E-17	0	-6.021E-17	-56.2329025
F753	COMB1	1.120000005	-60.8150444	-25.1039963	9.87704E-17	0	-1.7083E-16	-28.1164513
F753	COMB1	2.24000001	-57.9120102	-25.1039963	9.87704E-17	0	-2.8146E-16	-2.3503E-14
F753	COMB2	0	-55.7533226	-21.9659958	1.94454E-17	0	3.62768E-16	-49.2037888
F753	COMB2	1.120000005	-53.2131615	-21.9659958	1.94454E-17	0	3.40989E-16	-24.6018944
F753	COMB2	2.24000001	-50.673008	-21.9659958	1.94454E-17	0	3.1921E-16	-9.3841E-14
F753	COMB3	0	-55.7533226	-21.9659958	1.94454E-17	0	7.37578E-17	-49.2037888
F753	COMB3	1.120000005	-53.2131615	-21.9659958	1.94454E-17	0	5.19789E-17	-24.6018944
F753	COMB3	2.24000001	-50.673008	-21.9659958	1.94454E-17	0	3.02001E-17	-4.2866E-14
F754	D	0	-53.0984001	20.91999626	-3.0866E-17	0	-1.0035E-16	46.86075211
F754	D	1.120000005	-50.679203	20.91999626	-3.0866E-17	0	-6.5781E-17	23.43037605
F754	D	2.24000001	-48.260006	20.91999626	-3.0866E-17	0	-3.1211E-17	1.39472E-14
F754	L	0	0	-4.9385E-16	0	0	0	0
F754	L	1.120000005	0	-4.9385E-16	0	0	0	5.53114E-16
F754	L	2.24000001	0	-4.9385E-16	0	0	0	1.10623E-15
F754	EX	0	0	-3.1607E-14	-2.4693E-16	0	-4.014E-16	-5.138E-14
F754	EX	1.120000005	0	-3.1607E-14	-2.4693E-16	0	-1.2485E-16	-1.598E-14
F754	EX	2.24000001	0	-3.1607E-14	-2.4693E-16	0	1.51711E-16	1.9419E-14
F754	EY	0	0	4.52135E-20	0	0	0	0
F754	EY	1.120000005	0	4.52135E-20	0	0	0	-5.0639E-20
F754	EY	2.24000001	0	4.52135E-20	0	0	0	-1.0128E-19
F754	COMB1	0	-63.7180824	25.10399628	-3.7039E-17	0	-1.2042E-16	56.23290253
F754	COMB1	1.120000005	-60.8150444	25.10399628	-3.7039E-17	0	-7.8937E-17	28.11645126
F754	COMB1	2.24000001	-57.9120102	25.10399628	-3.7039E-17	0	-3.7454E-17	1.85066E-14
F754	COMB2	0	-55.7533226	21.96599579	-2.8798E-16	0	-5.2082E-16	49.20378876
F754	COMB2	1.120000005	-53.2131615	21.96599579	-2.8798E-16	0	-1.9829E-16	24.60189438
F754	COMB2	2.24000001	-50.673008	21.96599579	-2.8798E-16	0	1.24249E-16	3.50916E-14
F754	COMB3	0	-55.7533226	21.96599579	-1.1019E-16	0	-2.3181E-16	49.20378876
F754	COMB3	1.120000005	-53.2131615	21.96599579	-1.1019E-16	0	-1.084E-16	24.60189438
F754	COMB3	2.24000001	-50.673008	21.96599579	-1.1019E-16	0	1.50168E-17	2.11099E-14
F755	D	0	-53.0984001	-20.9199963	0	0	8.02806E-16	-46.8607521
F755	D	1.120000005	-50.679203	-20.9199963	0	0	8.02806E-16	-23.4303761
F755	D	2.24000001	-48.260006	-20.9199963	0	0	8.02806E-16	-1.9586E-14
F755	L	0	0	-9.877E-16	0	0	1.00351E-16	0
F755	L	1.120000005	0	-9.877E-16	0	0	1.00351E-16	1.10623E-15
F755	L	2.24000001	0	-9.877E-16	0	0	1.00351E-16	2.21245E-15
F755	EX	0	0	0	0	0	0	0
F755	EX	1.120000005	0	0	0	0	0	0
F755	EX	2.24000001	0	0	0	0	0	0
F755	EY	0	0	0	3.16065E-14	0	0	0
F755	EY	1.120000005	0	0	3.16065E-14	0	-3.5399E-14	0
F755	EY	2.24000001	0	0	3.16065E-14	0	-7.0799E-14	0
F755	COMB1	0	-63.7180824	-25.1039963	0	0	1.12393E-15	-56.2329025

PT. LAMBDA CIPTA
Enggineering Consultant

PT. LAMBDA CIPTA

ENGINEERING CONSULTANT
ARCHITECT - STRUCTURE - SURVEY - SUPERVISION
LABORATORIUM - MEKANIKA TANAH (TS) SERTIFIKASI NO. B00801471 - 4 - RU9547

PENYELIDIKAN TANAH PADA LOKASI :

PEMBAGUNAN PASAR RAKYAT
(KOTA TELUK KUANTAN)
KABUPATEN KUANTAN SINGINGI

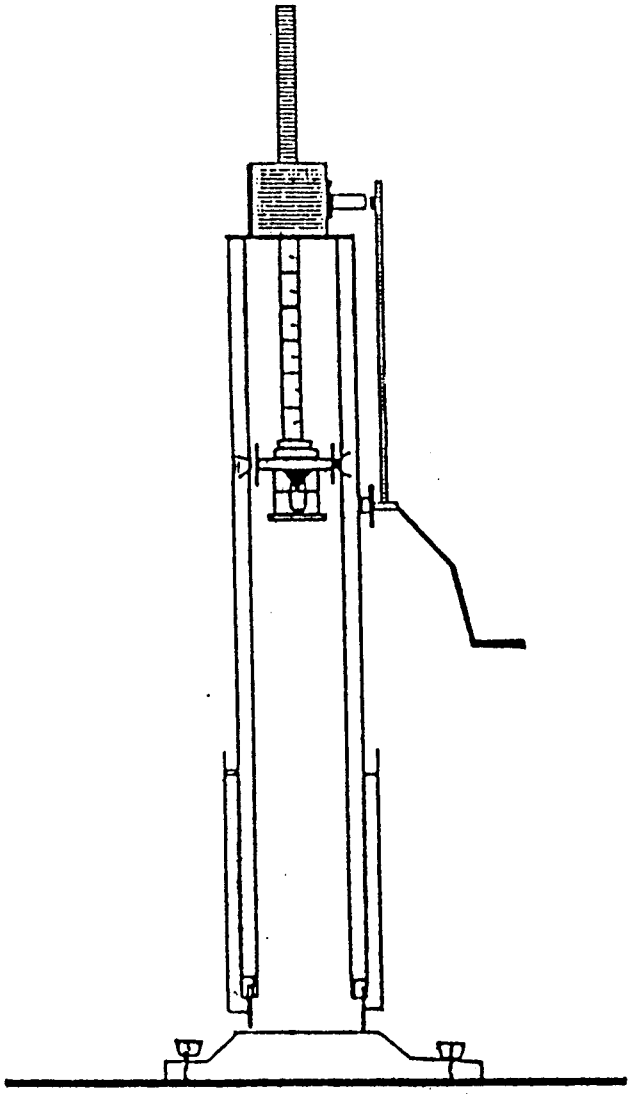

Head Office : Jl. Arengka Komplex Damai Langgeng Blok D No. 1 Pekanbaru Telp. (0761) 63356

S.3 (PASAR RAKYAT TELUK KUANTAN)

PT.LAMBDA CIPTA

ENGINEERING CONSULTANT

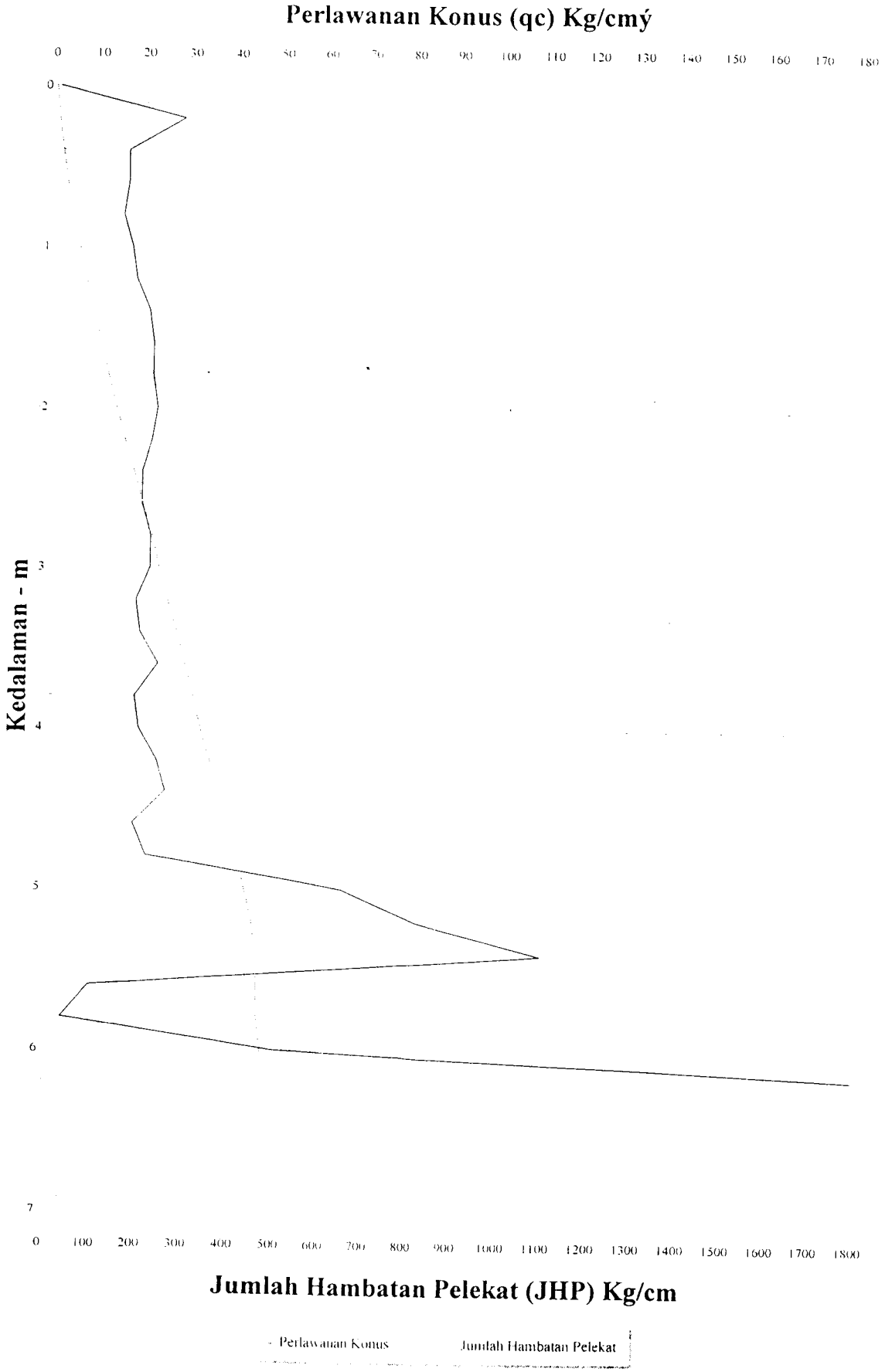

S.4 (PASAR RAKYAT TELUK KUANTAN)

PT.LAMBDA CIPTA
ENGINEERING CONSULTANT

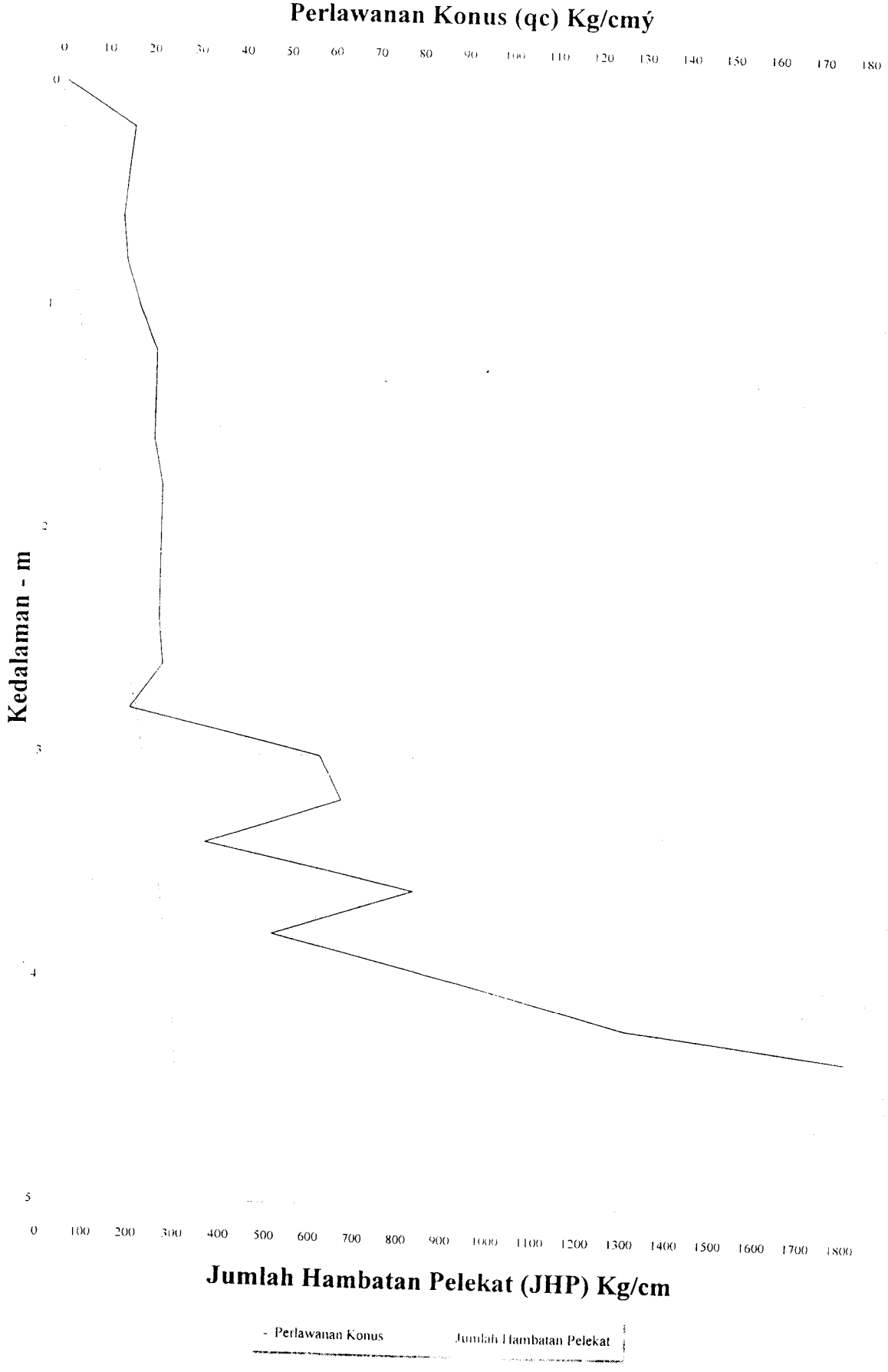

S.5 (PASAR RAKYAT TELUK KUANTAN)

PT.LAMBDA CIPTA

ENGINEERING CONSULTANT

Perlawanan Konus (qc) Kg/cmý

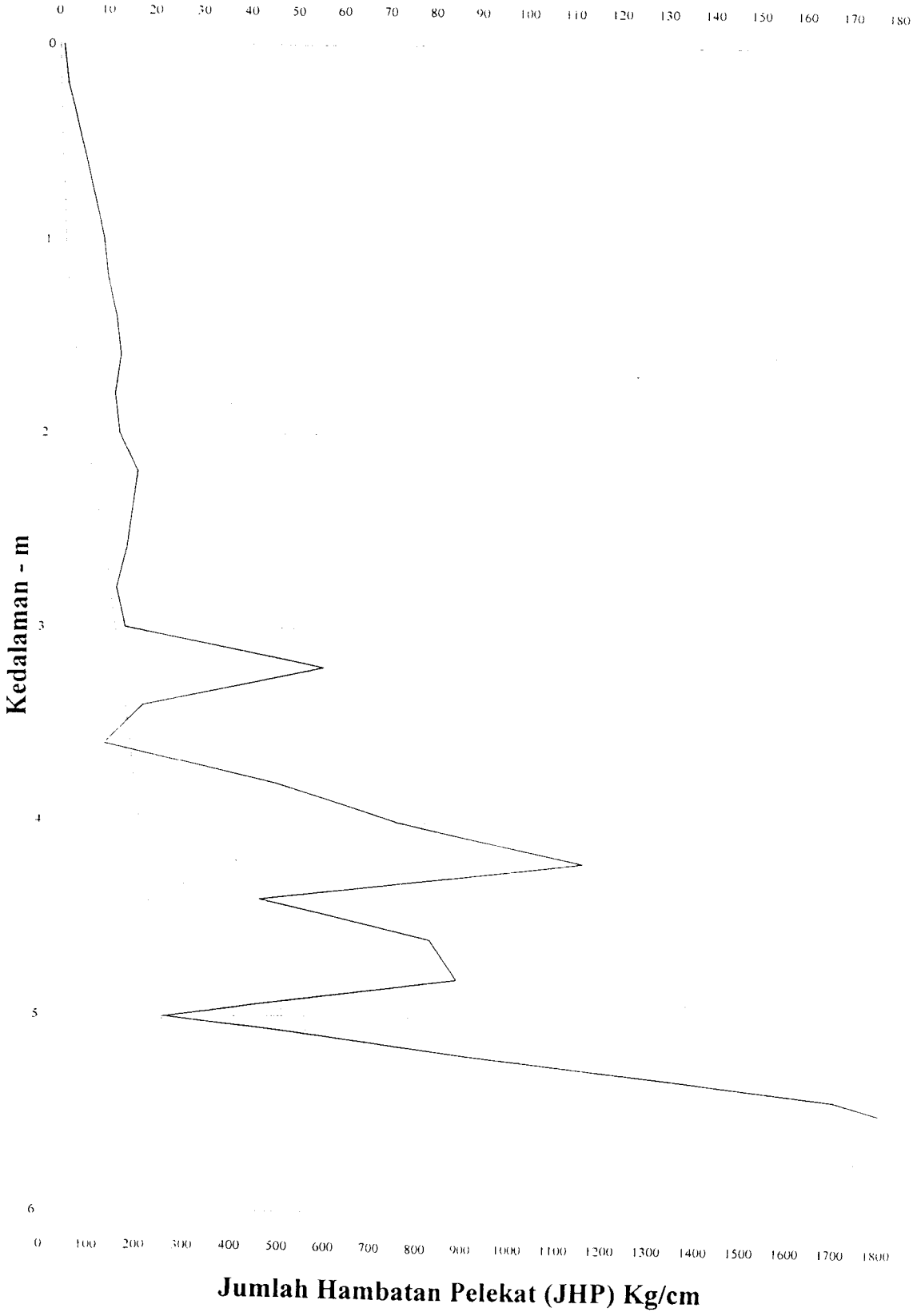

S.6 (PASAR RAKYAT TELUK KUANTAN)

PT.LAMBDA CIPTA
ENGINEERING CONSULTANT

Perlawanan Konus (qc) Kg/cmý

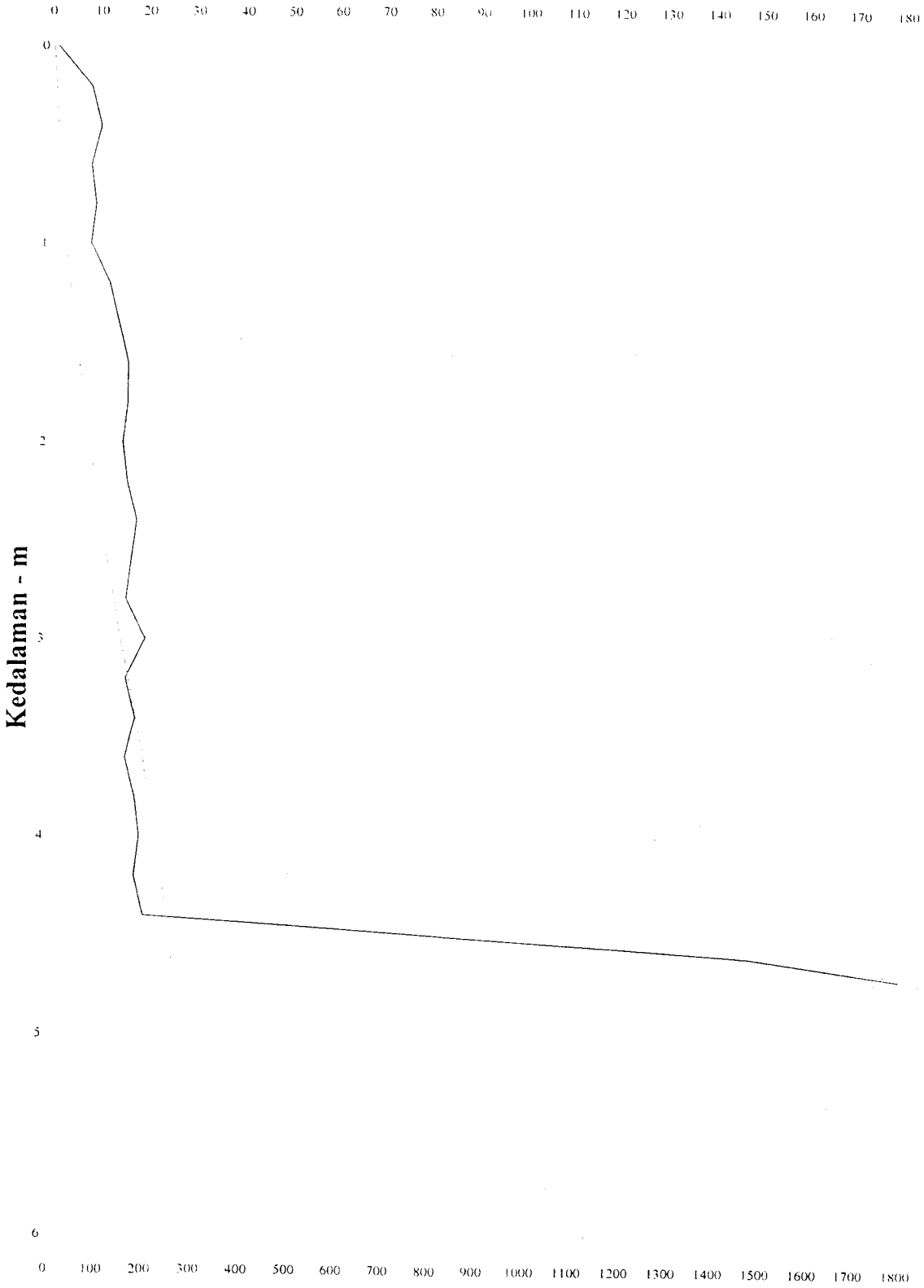

PT.LAMBDA CIPTA
ENGINEERING CONSULTANT

Lamp. Surat / Laporan No.	: 029/PT-LC/SON/VIII/2002	Dikerjakan	: RUM.Cs
No. Pemeriksaan	: **S.1 (PASAR RAKYAT TEL**	Dihitung Oleh	: IR. SKANDRY PUTRA
Proyek	: **KUANSING 2002**	Tanggal Pemeriksaar	: 10 s/d 11 Agustus 2002
Pekerjaan	: **PEMBANGUNAN PASAR RAKYAT KOTA TELUK KUANTAN**		
Lokasi	: **KOTA TELUK KUANTAN KABUPATEN KUANTAN SINGGINGI**		

Kedalaman (M)	Perlawanan Konus (Kg/ Cmý)	Jumlah Perlawanan (Kg/ Cmý)	Perlawanan Gesek (Kg/ Cmý)	Hambatan Pelekat (Kg/ Cm)	Jumlah Hamb. pelekat (Kg/ Cm)	Hambatan setempat (Kg/ Cm)
1	2	3	4	5	6	7
0.00	1	2	1	1,70	1,70	0,08
0,20	11	13	2	3,39	5,09	0,17
0,40	10	13	3	5,09	10,17	0,25
0,60	13	17	4	6,78	16,95	0.34
0,80	14	20	6	10,17	27,12	0,51
1,00	14	20	6	10,17	37,30	0,51
1,20	14	20	6	10,17	47,47	0,51
1,40	19	25	6	10,17	57,64	0,51
1,60	17	25	8	13,56	71,20	0,68
1,80	16	24	8	13,56	84,76	0,68
2,00	17	25	8	13,56	98,32	0,68
2,20	18	26	8	13,56	111,89	0,68
2,40	20	27	7	11,87	123,75	0,59
2,60	20	27	7	11,87	135,62	0,59
2,80	19	27	8	13,56	149,18	0,68
3,00	21	29	8	13,56	162,74	0,68
3,20	16	24	8	13,56	176,30	0,68
3,40	17	24	7	11,87	188,17	0,59
3,60	23	30	7	11,87	200,04	0,59
3,80	13	20	7	11,87	211,90	0,59
4,00	110	116	6	10,17	222,08	0,51
4,20	150	155	5	8,48	230,55	0,42
4,40	130	135	5	8,48	239,03	0,42
4,60	200	205	5	8,48	247,50	0,42
4,80						
5,00						
5,20						
5,40						
5,60						
5,80						
6,00						
6,20						
6,40						
6,60						
6,80						
7,00						
7,20						
7,40						
7,60						
7,80						

PT.LAMBDA CIPTA
ENGINEERING CONSULTANT

Lamp. Surat / Laporan No. : 029/PT-LC/SON/VIII/2002 Dikerjakan : RUM.Cs
No. Pemeriksaan : S.2 (PASAR RAKYAT TEL Dihitung Oleh : IR. SKANDRY PUTRA
Proyek : KUANSING 2002 Tanggal Pemeriksaar : 10 s/d 11 Agustus 2002
Pekerjaan : PEMBANGUNAN PASAR RAKYAT KOTA TELUK KUANTAN
Lokasi : KOTA TELUK KUANTAN KABUPATEN KUANTAN SINGGINGI

Kedalaman (M)	Perlawanan Konus (Kg/ Cmý)	Jumlah Perlawanan (Kg/ Cmý)	Perlawanan Gesek (Kg/ Cmý)	Hambatan Pelekat (Kg/ Cm)	Jumlah Hamb. pelekat (Kg/ Cm)	Hambatan setempat (Kg/ Cm)
1	2	3	4	5	6	7
0.00	1	2	1	1,70	1,70	0,08
0,20	7	10	3	5,09	6,78	0,25
0,40	10	14	4	6,78	13,56	0,34
0,60	10	15	5	8,48	22,04	0,42
0,80	10	16	6	10,17	32,21	0,51
1,00	10	17	7	11,87	44,08	0,59
1,20	12	20	8	13,56	57,64	0,68
1,40	13	22	9	15,26	72,90	0,76
1,60	15	23	8	13,56	86,46	0,68
1,80	18	26	8	13,56	100,02	0,68
2,00	18	26	8	13,56	113,58	0,68
2,20	18	36	18	30,51	144,10	1,53
2,40	19	30	11	18,65	162,74	0,93
2,60	19	30	11	18,65	181,39	0,93
2,80	19	30	11	18,65	200,04	0,93
3,00	16	26	10	16,95	216,99	0,85
3,20	18	30	12	20,34	237,33	1,02
3,40	19	30	11	18,65	255,98	0,93
3,60	17	28	11	18,65	274,63	0,93
3,80	17	28	11	18,65	293,28	0,93
4,00	19	30	11	18,65	311,92	0,93
4,20	18	28	10	16,95	328,88	0,85
4,40	20	30	10	16,95	345,83	0,85
4,60	17	28	11	18,65	364,48	0,93
4,80	16	26	10	16,95	381,43	0,85
5,00	155	160	5	8,48	389,90	0,42
5,20	205	208	3	5,09	394,99	0,25
5,40						
5,60						
5,80						
6,00						
6,20						
6,40						
6,60						
6,80						
7,00						
7,20						
7,40						
7,60						
7,80						

PT.LAMBDA CIPTA
ENGINEERING CONSULTANT

Lamp. Surat / Laporan No. : 029/PT-LC/SON/VIII/2002 Dikerjakan : RUM.Cs
No. Pemeriksaan : S.4 (PASAR RAKYAT TEL Dihitung Oleh : IR. SKANDRY PUTRA
Proyek : KUANSING 2002 Tanggal Pemeriksaar : 10 s/d 11 Agustus 2002
Pekerjaan : PEMBANGUNAN PASAR RAKYAT KOTA TELUK KUANTAN
Lokasi : KOTA TELUK KUANTAN KABUPATEN KUANTAN SINGGINGI

Kedalaman (M)	Perlawanan Konus (Kg/ Cmý)	Jumlah Perlawanan (Kg/ Cmý)	Perlawanan Gesek (Kg/ Cmý)	Hambatan Pelekat (Kg/ Cm)	Jumlah Hamb. pelekat (Kg/ Cm)	Hambatan setempat (Kg/ Cm)
1	2	3	4	5	6	7
0.00	1	2	1	1,70	1,70	0,08
0,20	16	18	2	3,39	5,09	0,17
0,40	15	19	4	6,78	11,87	0,34
0,60	14	20	6	10,17	22,04	0,51
0,80	15	22	7	11,87	33,90	0,59
1,00	18	25	7	11,87	45,77	0,59
1,20	22	30	8	13,56	59,33	0,68
1,40	22	30	8	13,56	72,90	0,68
1,60	22	32	10	16,95	89,85	0,85
1,80	24	34	10	16,95	106,80	0,85
2,00	24	34	10	16,95	123,75	0,85
2,20	24	34	10	16,95	140,70	0,85
2,40	24	34	10	16,95	157,66	0,85
2,60	25	34	9	15,26	172,91	0,76
2,80	18	30	12	20,34	193,26	1,02
3,00	60	70	10	16,95	210,21	0,85
3,20	65	75	10	16,95	227,16	0,85
3,40	35	42	7	11,87	239,03	0,59
3,60	82	90	8	13,56	252,59	0,68
3,80	50	58	8	13,56	266,15	0,68
4,00	92	100	8	13,56	279,71	0,68
4,20	130	136	6	10,17	289,89	0,51
4,40	210	214	4	6,78	296,67	0,34
4,60						
4,80						
5,00						
5,20						
5,40						
5,60						
5,80						
6,00						
6,20						
6,40						
6,60						
6,80						
7,00						
7,20						
7,40						
7,60						
7,80						

Proyek : PEMERINTAH KABUPATEN KUANTAN SINGINGI
Pekerjaan : PEMBANGUNAN PASAR RAKYAT TELUK KUANTAN
Lokasi : KOTA TELUK KUANTAN KABUPATEN TELUK KUANTAN

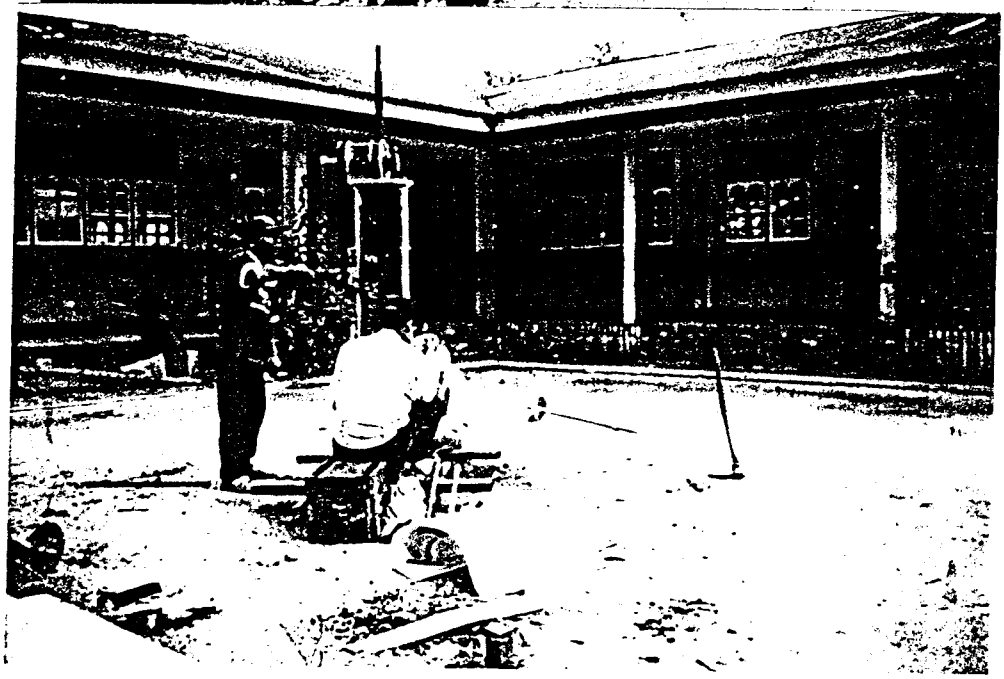

Proyek : PEMERINTAH KABUPATEN KUANTAN SINGINGI
Pekerjaan : PEMBANGUNAN PASAR RAKYAT TELUK KUANTAN
Lokasi : KOTA TELUK KUANTAN KABUPATEN TELUK KUANTAN

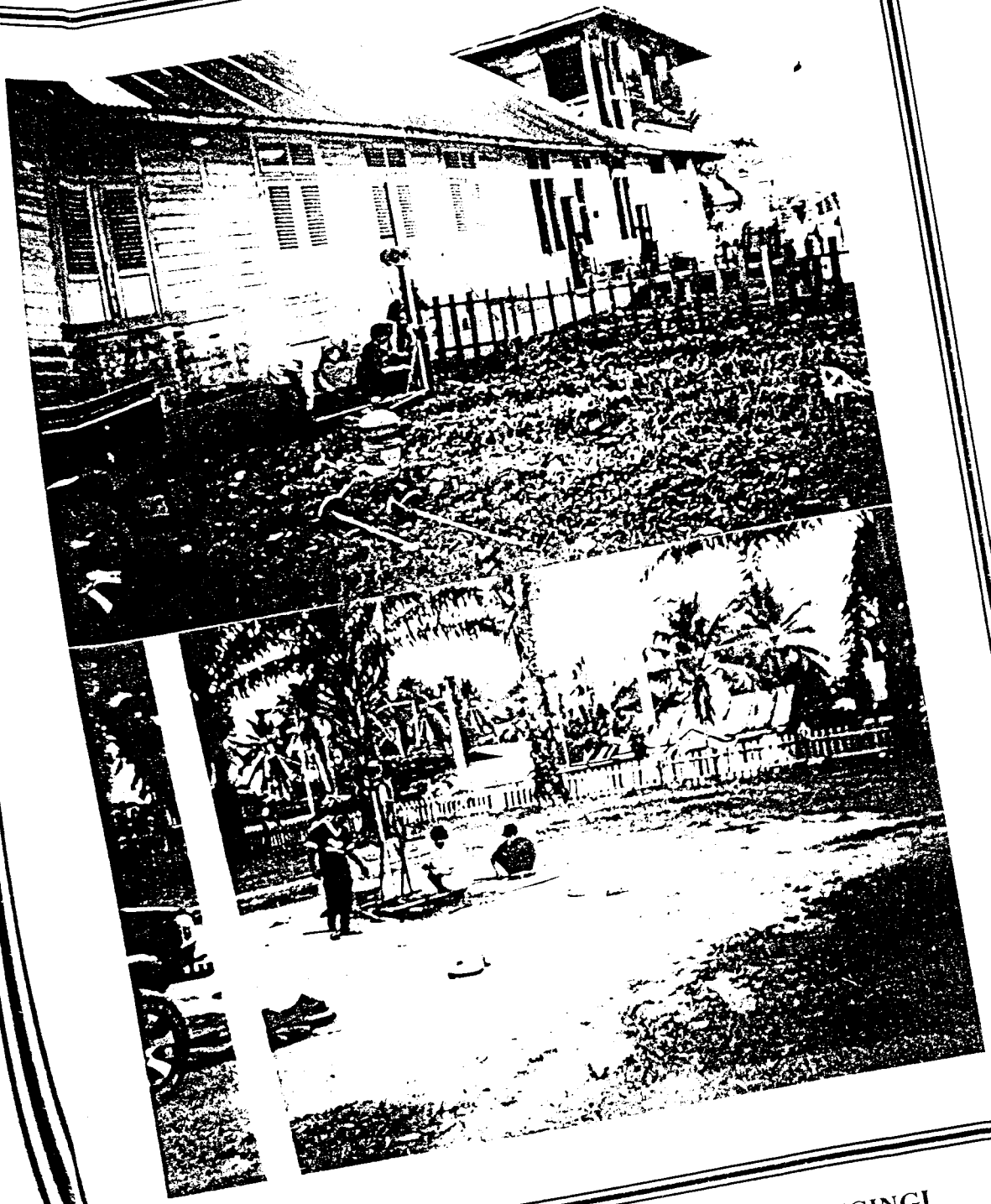

Proyek : PEMERINTAH KABUPATEN KUANTAN SINGINGI
Pekerjaan : PEMBANGUNAN PASAR RAKYAT TELUK KUANTAN
Lokasi : KOTA TELUK KUANTAN KABUPATEN TELUK KUANTAN

Proyek : PEMERINTAH KABUPATEN KUANTAN SINGINGI
Pekerjaan : PEMBANGUNAN PASAR RAKYAT TELUK KUANTAN
Lokasi : KOTA TELUK KUANTAN KABUPATEN TELUK KUANTAN