APPENDIX A
KUESIONER PENELITIAN

"Female Online Shoppers Examining The Mediating Roles of E-Satisfaction and E-Trust On E-Loyalty Development".

Assalamualaikum Wr. Wb.

Dengan hormat,

Dalam rangka penyelesaian tugas akhir (skripsi) sebagai mahasiswa Program Strata Satu (S-1), saya Maharatna Shifa Nurizka jurusan Manajemen FE UII. Saat ini Saya sedang melaksanakan penelitian berjudul "Female Online Shoppers Examining The Mediating Roles of E-Satisfaction and E-Trust On E-Loyalty Development".

Penelitian ini fokus pada pembeli e-tail wanita dan bertujuan untuk menguji mediator e-loyalty, e-satisfaction dan e-trust dalam konteks e-tail (saya melakukan sample dari pelanggan wanita atau pengguna aplikasi SHOPEE).

Oleh karena itu, Saya meminta kesediaan Anda untuk mengisi kuesioner ini sesuai dengan pengalaman Anda. Identitas Anda akan dijaga kerahasiaannya dan hanya digunakan untuk kepentingan penelitian.

Atas kesediaan dan kerja sama Bapak/Ibu/Saudara/i,

Saya ucapkan terima kasih.

Wassalamualaikum Wr. Wb.

BAGIAN 1 : BIODATA RESPONDEN

1. Berapakah usia Anda?

□15-19

□20-24

□25-29

□>30

2. Pendidikan terakhir Anda?

□SD

□SMP

□SMA/SMK

□Perguruan Tinggi

3. Pengeluaran setiap bulan? (dalam Rupiah)

□< 1.000.000

□1.000.000 - 3.000.000

□3.000.001 - 5.000.000

□> 5.000.001

4. Waktu yang dihabiskan untuk online per minggu?

□<5 hours

□6-15 hours

□16-25 hours

□26-35 hours

□>36 hours

BAGIAN 2 : PENGALAMAN RESPONDEN

APAKAH ANDA MENGETAHUI TENTANG SHOPEE?

- □ Ya
- □ Tidak

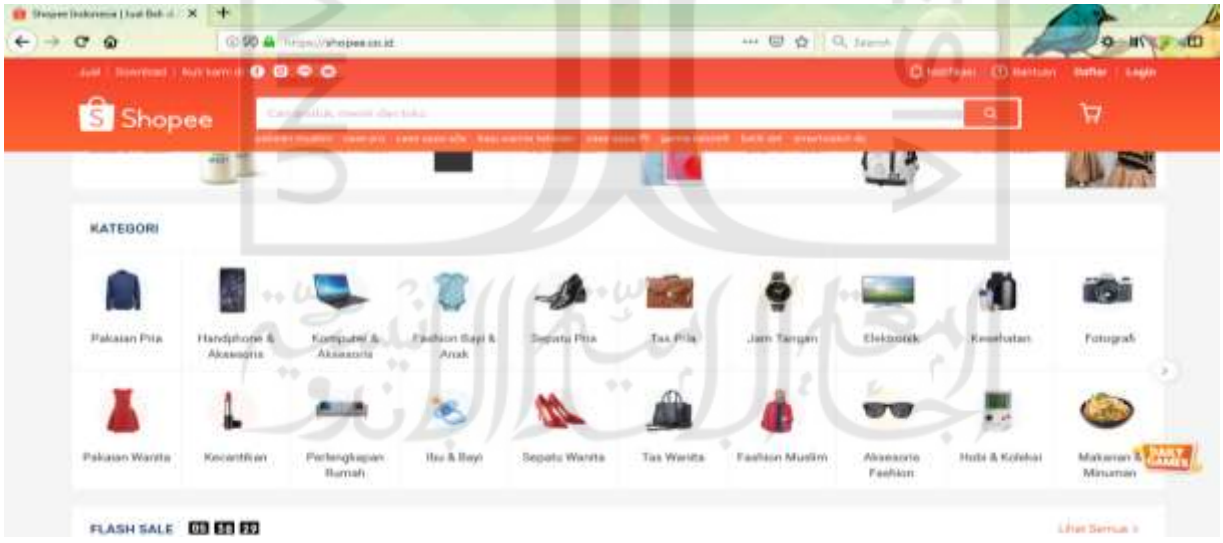

Petunjuk : berilak penilaian Bpk/Ibu/ Sdr terhadap pernyataan-pernyataan di abwah ini dengan mengisi angka yang dianggap paling sesuai

1	2	3	4	5	6

Sangat Tidak Setuju (STS)	Tidak Setuju (TS)	Agak Tidak Setuju (ATS)	Agak Setuju (AS)	Setuju (S)	Setuju Sekali (SS)

BAGIAN 3 : WAKTU PENGIRIMAN YANG DIBERIKAN

No	Pernyataan dibawah ini berkenaan dengan waktu pengiriman yang Shopee berikan	1 STS	2 TS	3 ATS	4 AS	5 S	6 SS
1	Secara keseluruhan, saya bisa menerima barang pesanan dengan cepat;						
2	Secara keseluruhan, saya merasa bahwa toko online di Shopee memproses pesanan saya dengan cepat;						
3	Secara umum, saya dapat mengetahui status pesanan saya kapan saja.						

BAGIAN 4 : DESAIN WEB SITE

No	Pernyataan dibawah ini berkenaan dengan kualitas desain website pada Shopee	1 STS	2 TS	3 ATS	4 AS	5 S	6 SS
1	Toko online pada Shopee menyediakan informasi mendalam;						
2	Toko online pada Shopee tidak membuang waktu						
3	Mudah untuk menyelesaikan transaksi di toko online pada Shopee ini						
4	Toko online pada Shopee ini menawarkan layanan personal yang sesuai						
5	Toko online pada Shopee ini memiliki pilihan yang baik.						

BAGIAN 5 : PRIVASI ONLINE YANG DIBERIKAN

No	Pernyataan dibawah ini berkenaan dengan kualitas privasi online yang Shopee berikan	1 STS	2 TS	3 ATS	4 AS	5 S	6 SS
1	Saya diberitahu informasi apa yang akan dikumpulkan perusahaan tentang saya						
2	Shopee menjelaskan bagaimana mereka akan menggunakan informasi yang dikumpulkan tentang saya						
3	Shopee memiliki mekanisme / kebijakan yang jelas untuk meninjau dan mengubah informasi pribadi yang tidak benar						

4	Saya merasa bahwa Shopee berusaha untuk menyimpan informasi pribadi saya dari tangan individu yang tidak diotorisasi						
5	Saya merasa bahwa Shopee berusaha untuk menyimpan informasi pribadi saya dari tangan individu yang tidak diotorisasi						

BAGIAN 6 : KEAMANAN ONLINE YANG DIBERIKAN

No	Pernyataan dibawah ini berkenaan dengan kualitas keamanan online yang Shopee berikan	1 STS	2 TS	3 ATS	4 AS	5 S	6 SS
1	Saya percaya bahwa Shopee menerapkan langkah-langkah keamanan untuk melindungi pembeli di internet						
2	Saya percaya bahwa Shopee memastikan bahwa informasi transaksional terlindungi dari perubahan atau kerusakan yang tidak disengaja selama pengiriman di internet						
3	Saya percaya bahwa Shopee memiliki mekanisme pembayaran online yang sangat aman						
4	Saya percaya bahwa Shopee memiliki kemampuan superior dalam menangani pembajakan online						
5	Saya percaya bahwa saat transaksi dilindungi oleh teknik keamanan mutakhir di Shopee						

BAGIAN 7 : KEPUASAN

No	Pernyataan dibawah ini berkenaan dengan kepuasan yang Shopee berikan	1 STS	2 TS	3 ATS	4 AS	5 S	6 SS
1	Saya suka membeli produk dari Shopee						
2	Saya senang dengan pengalaman membeli produk dari Shopee						
3	Saya pikir membeli produk dari Shopee adalah ide bagus						
4	Secara keseluruhan, saya puas dengan pengalaman membeli produk Shopee						

BAGIAN 8 : KEPERCAYAAN

No	Pernyataan dibawah ini berkenaan dengan kepercayaan yang diberikan Shopee	1 STS	2 TS	3 ATS	4 AS	5 S	6 SS

1	Saya percaya bahwa Shopee dengan jujur memberikan informasi yang benar						
2	Saya percaya tidak ada kekeliruan di Shopee						
3	Saya percaya bahwa Shopee tidak akan mengambil tindakan buruk terhadap konsumennya						

BAGIAN 9 : LOYALITAS

No	Pernyataan dibawah ini berkenaan dengan loyalitas terhadap Shopee	1 STS	2 TS	3 ATS	4 AS	5 S	6 SS
1	Jika Shopee terus mempertahankan kinerja layanan saat ini, saya tidak akan beralih ke toko online lainnya;						
2	Sejauh ini jenis produk yang dijual Shopee, saya cukup mempertimbangkan untuk membeli di toko online lainnya						
3	Saya suka memanfaatkan Shopee						
4	Bagi saya, Shopee adalah situs web terbaik untuk berbelanja kebutuhan saya						

APPENDIX B

VALIDITY & RELIABILITY TEST OF RESEARCH INSTRUMENTS RESULTS

A. PDT

Case Processing Summary

		N	%
Cases	Valid	35	100.0
	Excluded[a]	0	.0
	Total	35	100.0

a. Listwise deletion based on all variables in the procedure.

Reliability Statistics

Cronbach's Alpha	Cronbach's Alpha Based on Standardized Items	N of Items
.792	.798	3

Item Statistics

	Mean	Std. Deviation	N
PDT1	4.80	1.208	35
PDT2	4.94	1.136	35
PDT3	5.09	1.522	35

Scale Statistics

Mean	Variance	Std. Deviation	N of Items
14.83	10.734	3.276	3

Summary Item Statistics

	Mean	Minimum	Maximum	Range	Maximum / Minimum	Variance	N of Items
Item Means	4.943	4.800	5.086	.286	1.060	.020	3

Item-Total Statistics

	Scale Mean if Item Deleted	Scale Variance if Item Deleted	Corrected Item-Total Correlation	Squared Multiple Correlation	Cronbach's Alpha if Item Deleted
PDT1	10.03	5.911	.573	.331	.780
PDT2	9.89	5.810	.663	.463	.701
PDT3	9.74	4.079	.706	.514	.652

B. WSD

Case Processing Summary

		N	%
Cases	Valid	35	100.0
	Excluded[a]	0	.0
	Total	35	100.0

a. Listwise deletion based on all variables in the procedure.

Reliability Statistics

Cronbach's Alpha	Cronbach's Alpha Based on Standardized Items	N of Items
.743	.748	5

Item Statistics

	Mean	Std. Deviation	N
WSD1	4.97	1.150	35
WSD2	5.63	1.374	35
WSD3	5.54	.950	35
WSD4	5.26	.980	35
WSD5	5.29	1.073	35

Scale Statistics

Mean	Variance	Std. Deviation	N of Items
26.69	15.339	3.917	5

Summary Item Statistics

	Mean	Minimum	Maximum	Range	Maximum / Minimum	Variance	N of Items
Item Means	5.337	4.971	5.629	.657	1.132	.068	5

Item-Total Statistics

	Scale Mean if Item Deleted	Scale Variance if Item Deleted	Corrected Item-Total Correlation	Squared Multiple Correlation	Cronbach's Alpha if Item Deleted
WSD1	21.71	10.504	.471	.322	.711
WSD2	21.06	8.938	.550	.339	.686
WSD3	21.14	11.597	.439	.302	.721
WSD4	21.43	10.782	.559	.338	.682
WSD5	21.40	10.424	.543	.324	.684

C. POP

Case Processing Summary

		N	%
Cases	Valid	35	100.0
	Excluded[a]	0	.0
	Total	35	100.0

a. Listwise deletion based on all variables in the procedure.

Reliability Statistics

Cronbach's Alpha	Cronbach's Alpha Based on Standardized Items	N of Items
.764	.763	5

Item Statistics

	Mean	Std. Deviation	N
POP1	4.80	1.256	35
POP2	5.00	1.393	35
POP3	4.77	1.437	35
POP4	4.97	1.382	35
POP5	5.37	1.190	35

Scale Statistics

Mean	Variance	Std. Deviation	N of Items
24.91	22.904	4.786	5

Summary Item Statistics

	Mean	Minimum	Maximum	Range	Maximum / Minimum	Variance	N of Items
Item Means	4.983	4.771	5.371	.600	1.126	.057	5

Item-Total Statistics

	Scale Mean if Item Deleted	Scale Variance if Item Deleted	Corrected Item-Total Correlation	Squared Multiple Correlation	Cronbach's Alpha if Item Deleted
POP1	20.11	15.222	.623	.591	.691
POP2	19.91	15.375	.511	.642	.729
POP3	20.14	14.244	.608	.553	.693
POP4	19.94	15.408	.515	.665	.728
POP5	19.54	17.373	.415	.561	.758

D. POS

Case Processing Summary

		N	%
Cases	Valid	35	100.0
	Excluded[a]	0	.0
	Total	35	100.0

a. Listwise deletion based on all variables in the procedure.

Reliability Statistics

Cronbach's Alpha	Cronbach's Alpha Based on Standardized Items	N of Items
.785	.790	5

Item Statistics

	Mean	Std. Deviation	N
POS1	5.66	.906	35
POS2	4.86	1.309	35
POS3	5.49	1.011	35
POS4	5.00	.874	35
POS5	5.23	.942	35

Scale Statistics

Mean	Variance	Std. Deviation	N of Items
26.23	14.005	3.742	5

Summary Item Statistics

	Mean	Minimum	Maximum	Range	Maximum / Minimum	Variance	N of Items
Item Means	5.246	4.857	5.657	.800	1.165	.110	5

Item-Total Statistics

	Scale Mean if Item Deleted	Scale Variance if Item Deleted	Corrected Item-Total Correlation	Squared Multiple Correlation	Cronbach's Alpha if Item Deleted
POS1	20.57	10.134	.529	.333	.756
POS2	21.37	7.770	.619	.390	.734
POS3	20.74	9.432	.572	.349	.742
POS4	21.23	10.358	.512	.309	.761
POS5	21.00	9.529	.617	.421	.729

E. ESATISFACTION

Case Processing Summary

		N	%
Cases	Valid	35	100.0
	Excluded[a]	0	.0
	Total	35	100.0

a. Listwise deletion based on all variables in the procedure.

Reliability Statistics

Cronbach's Alpha	Cronbach's Alpha Based on Standardized Items	N of Items
.919	.928	4

Item Statistics

	Mean	Std. Deviation	N
ES1	4.80	1.471	35
ES2	5.00	1.085	35
ES3	4.94	1.413	35
ES4	5.03	1.248	35

Scale Statistics

Mean	Variance	Std. Deviation	N of Items
19.77	22.182	4.710	4

Summary Item Statistics

	Mean	Minimum	Maximum	Range	Maximum / Minimum	Variance	N of Items
Item Means	4.943	4.800	5.029	.229	1.048	.010	4

Item-Total Statistics

	Scale Mean if Item Deleted	Scale Variance if Item Deleted	Corrected Item-Total Correlation	Squared Multiple Correlation	Cronbach's Alpha if Item Deleted
ES1	14.97	12.323	.745	.601	.924
ES2	14.77	13.593	.927	.867	.869
ES3	14.83	12.146	.816	.747	.895

Item-Total Statistics

	Scale Mean if Item Deleted	Scale Variance if Item Deleted	Corrected Item-Total Correlation	Squared Multiple Correlation	Cronbach's Alpha if Item Deleted
ES1	14.97	12.323	.745	.601	.924
ES2	14.77	13.593	.927	.867	.869
ES3	14.83	12.146	.816	.747	.895
ES4	14.74	13.197	.819	.720	.893

F. ETRUST BEFORE DELETE

Case Processing Summary

		N	%
Cases	Valid	35	100.0
	Excluded[a]	0	.0
	Total	35	100.0

a. Listwise deletion based on all variables in the procedure.

Reliability Statistics

Cronbach's Alpha	Cronbach's Alpha Based on Standardized Items	N of Items
.763	.769	4

Item Statistics

	Mean	Std. Deviation	N
ET1	4.83	1.124	35
ET2	4.43	1.558	35
ET3	5.34	.873	35
ET4	5.31	1.078	35

Scale Statistics

Mean	Variance	Std. Deviation	N of Items
19.91	13.139	3.625	4

Summary Item Statistics

	Mean	Minimum	Maximum	Range	Maximum / Minimum	Variance	N of Items
Item Means	4.979	4.429	5.343	.914	1.206	.190	4

Item-Total Statistics

	Scale Mean if Item Deleted	Scale Variance if Item Deleted	Corrected Item-Total Correlation	Squared Multiple Correlation	Cronbach's Alpha if Item Deleted
ET1	15.09	6.845	.855	.762	.546
ET2	15.49	6.316	.561	.568	.743
ET3	14.57	10.782	.279	.164	.824
ET4	14.60	7.953	.661	.585	.660

ET AFTER DELETE

Case Processing Summary

		N	%
Cases	Valid	35	100.0
	Excluded[a]	0	.0
	Total	35	100.0

a. Listwise deletion based on all variables in the procedure.

Reliability Statistics

Cronbach's Alpha	Cronbach's Alpha Based on Standardized Items	N of Items
.824	.846	3

Item Statistics

	Mean	Std. Deviation	N
ET1	4.83	1.124	35
ET2	4.43	1.558	35
ET4	5.31	1.078	35

Scale Statistics

Mean	Variance	Std. Deviation	N of Items
14.57	10.782	3.284	3

Summary Item Statistics

	Mean	Minimum	Maximum	Range	Maximum / Minimum	Variance	N of Items
Item Means	4.857	4.429	5.314	.886	1.200	.197	3

Item-Total Statistics

	Scale Mean if Item Deleted	Scale Variance if Item Deleted	Corrected Item-Total Correlation	Squared Multiple Correlation	Cronbach's Alpha if Item Deleted
ET1	9.74	5.138	.859	.751	.602
ET2	10.14	4.244	.640	.553	.856
ET4	9.26	6.255	.623	.578	.819

G. ELOYALTY

Case Processing Summary

		N	%
Cases	Valid	35	100.0
	Excluded[a]	0	.0
	Total	35	100.0

a. Listwise deletion based on all variables in the procedure.

Reliability Statistics

Cronbach's Alpha	Cronbach's Alpha Based on Standardized Items	N of Items
.905	.907	4

Item Statistics

	Mean	Std. Deviation	N
EL1	5.40	1.288	35
EL2	5.14	1.141	35

EL3	5.17	1.272	35
EL4	4.97	1.224	35

Scale Statistics

Mean	Variance	Std. Deviation	N of Items
20.69	18.928	4.351	4

Summary Item Statistics

	Mean	Minimum	Maximum	Range	Maximum / Minimum	Variance	N of Items
Item Means	5.171	4.971	5.400	.429	1.086	.031	4

Item-Total Statistics

	Scale Mean if Item Deleted	Scale Variance if Item Deleted	Corrected Item-Total Correlation	Squared Multiple Correlation	Cronbach's Alpha if Item Deleted
EL1	15.29	10.798	.764	.691	.886
EL2	15.54	11.079	.862	.768	.854
EL3	15.51	11.316	.701	.555	.909
EL4	15.71	10.739	.834	.699	.861

ALL

Case Processing Summary

		N	%
Cases	Valid	35	100.0
	Excluded[a]	0	.0
	Total	35	100.0

a. Listwise deletion based on all variables in the procedure.

Reliability Statistics

Cronbach's Alpha	Cronbach's Alpha Based on Standardized Items	N of Items
.918	.917	29

Item Statistics

	Mean	Std. Deviation	N
EL1	5.40	1.288	35
EL2	5.14	1.141	35
EL3	5.17	1.272	35
EL4	4.97	1.224	35
ET1	4.83	1.124	35
ET2	4.43	1.558	35
ET4	5.31	1.078	35
ES1	4.80	1.471	35
ES2	5.00	1.085	35
ES3	4.94	1.413	35
ES4	5.03	1.248	35
POS1	5.66	.906	35

POS2	4.86	1.309	35
POS3	5.49	1.011	35
POS4	5.00	.874	35
POS5	5.23	.942	35
POP1	4.80	1.256	35
POP2	5.00	1.393	35
POP3	4.77	1.437	35
POP4	4.97	1.382	35
POP5	5.37	1.190	35
WSD1	4.97	1.150	35
WSD2	5.63	1.374	35
WSD3	5.54	.950	35
WSD4	5.26	.980	35
WSD5	5.29	1.073	35
PDT1	4.80	1.208	35
PDT2	4.94	1.136	35
PDT3	5.09	1.522	35

Summary Item Statistics

	Mean	Minimum	Maximum	Range	Maximum / Minimum	Variance	N of Items
Item Means	5.093	4.429	5.657	1.229	1.277	.083	29

Item-Total Statistics

	Scale Mean if Item Deleted	Scale Variance if Item Deleted	Corrected Item-Total Correlation	Squared Multiple Correlation	Cronbach's Alpha if Item Deleted
EL1	142.29	353.739	.538	.	.915
EL2	142.54	354.491	.597	.	.914
EL3	142.51	348.728	.655	.	.913
EL4	142.71	352.445	.598	.	.914
ET1	142.86	357.538	.533	.	.915
ET2	143.26	350.432	.490	.	.916
ET4	142.37	364.064	.394	.	.917
ES1	142.89	344.516	.637	.	.913
ES2	142.69	355.163	.614	.	.914
ES3	142.74	350.903	.539	.	.915
ES4	142.66	347.703	.692	.	.913
POS1	142.03	369.852	.310	.	.918
POS2	142.83	356.205	.476	.	.916
POS3	142.20	365.047	.398	.	.917
POS4	142.69	373.339	.218	.	.919

POS5	142.46	370.961	.265	.	.919
POP1	142.89	349.634	.644	.	.913
POP2	142.69	348.222	.602	.	.914
POP3	142.91	356.728	.418	.	.917
POP4	142.71	361.151	.350	.	.918
POP5	142.31	359.045	.465	.	.916
WSD1	142.71	357.798	.513	.	.916
WSD2	142.06	346.291	.651	.	.913
WSD3	142.14	372.891	.209	.	.919
WSD4	142.43	361.429	.511	.	.916
WSD5	142.40	360.894	.476	.	.916
PDT1	142.89	349.516	.675	.	.913
PDT2	142.74	353.726	.619	.	.914
PDT3	142.60	350.129	.509	.	.916

Scale Statistics

Mean	Variance	Std. Deviation	N of Items
147.69	381.457	19.531	29

ALL

Case Processing Summary

		N	%
Cases	Valid	35	100.0
	Excluded[a]	0	.0
	Total	35	100.0

a. Listwise deletion based on all variables in the procedure.

Reliability Statistics

Cronbach's Alpha	Cronbach's Alpha Based on Standardized Items	N of Items
.918	.917	29

Item Statistics

	Mean	Std. Deviation	N
EL1	5.40	1.288	35
EL2	5.14	1.141	35
EL3	5.17	1.272	35
EL4	4.97	1.224	35
ET1	4.83	1.124	35
ET2	4.43	1.558	35
ET4	5.31	1.078	35
ES1	4.80	1.471	35
ES2	5.00	1.085	35
ES3	4.94	1.413	35
ES4	5.03	1.248	35
POS1	5.66	.906	35

POS2	4.86	1.309	35
POS3	5.49	1.011	35
POS4	5.00	.874	35
POS5	5.23	.942	35
POP1	4.80	1.256	35
POP2	5.00	1.393	35
POP3	4.77	1.437	35
POP4	4.97	1.382	35
POP5	5.37	1.190	35
WSD1	4.97	1.150	35
WSD2	5.63	1.374	35
WSD3	5.54	.950	35
WSD4	5.26	.980	35
WSD5	5.29	1.073	35
PDT1	4.80	1.208	35
PDT2	4.94	1.136	35
PDT3	5.09	1.522	35

Summary Item Statistics

	Mean	Minimum	Maximum	Range	Maximum / Minimum	Variance	N of Items
Item Means	5.093	4.429	5.657	1.229	1.277	.083	29

Item-Total Statistics

	Scale Mean if Item Deleted	Scale Variance if Item Deleted	Corrected Item-Total Correlation	Squared Multiple Correlation	Cronbach's Alpha if Item Deleted
EL1	142.29	353.739	.538	.	.915
EL2	142.54	354.491	.597	.	.914
EL3	142.51	348.728	.655	.	.913
EL4	142.71	352.445	.598	.	.914
ET1	142.86	357.538	.533	.	.915
ET2	143.26	350.432	.490	.	.916
ET4	142.37	364.064	.394	.	.917
ES1	142.89	344.516	.637	.	.913
ES2	142.69	355.163	.614	.	.914
ES3	142.74	350.903	.539	.	.915
ES4	142.66	347.703	.692	.	.913
POS1	142.03	369.852	.310	.	.918
POS2	142.83	356.205	.476	.	.916
POS3	142.20	365.047	.398	.	.917
POS4	142.69	373.339	.218	.	.919
POS5	142.46	370.961	.265	.	.919
POP1	142.89	349.634	.644	.	.913
POP2	142.69	348.222	.602	.	.914

POP3	142.91	356.728	.418	.	.917
POP4	142.71	361.151	.350	.	.918
POP5	142.31	359.045	.465	.	.916
WSD1	142.71	357.798	.513	.	.916
WSD2	142.06	346.291	.651	.	.913
WSD3	142.14	372.891	.209	.	.919
WSD4	142.43	361.429	.511	.	.916
WSD5	142.40	360.894	.476	.	.916
PDT1	142.89	349.516	.675	.	.913
PDT2	142.74	353.726	.619	.	.914
PDT3	142.60	350.129	.509	.	.916

Scale Statistics

Mean	Variance	Std. Deviation	N of Items
147.69	381.457	19.531	29

APPENDIX C

TABELS OF RESPONDENTS' CHARACTERISTICS AND CLASSFIFICATION

A. Respondents Based on "Shopee" Buyer Experience

No	Experience	Number (person)	Percentage
1	People who ever buy	255	97.3
2	People who never buy	7	2.7
Total		262	100

B. Respondents Based on Age

No	Age (Year)	Number (person)	Percentage
1	15-19	54	21.2
2	20-24	168	65.9
3	25-29	20	7.8
4	>30	13	5.1
Total		255	100

C. Respondents Based on Education Level

No	Education	Number (person)	Percentage
1	Elementary school	2	0.8
2	Junior High School / Equivalent	10	3.9
3	Senior High School / Equivalent	154	60.4
4	College / University	89	34.9
Total		255	100

D. Respondents based on Time Spending on Web Surfing per Week

No	Frequency (Hours per week)	Number (person)	Percentage
1	<5 hours	59	23.1
2	6-15 hours	74	29
3	16-25 hours	59	23.1
4	26-35 hours	7	2.8
5	>36 hours	56	22
Total		255	100

APPENDIX D

THE RESULT OF MODEL MEASUREMENT BEFORE MODIFICATION

1. E-LOYALTY

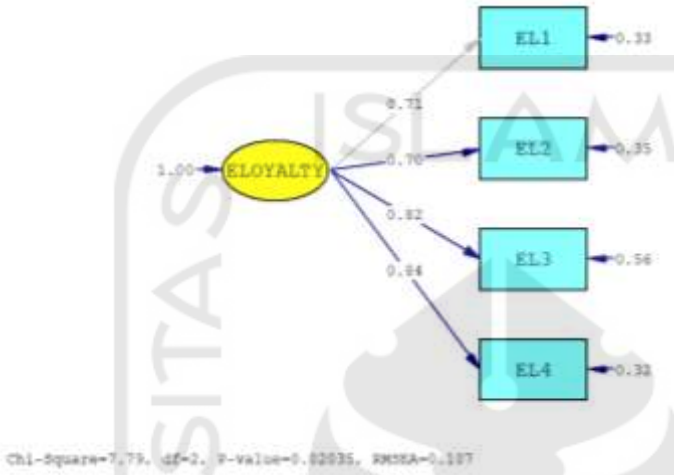

DATE: 11/23/2018
TIME: 4:43
L I S R E L 8.80
BY

Karl G. Jöreskog & Dag Sörbom

This program is published exclusively by
Scientific Software International, Inc.
7383 N. Lincoln Avenue, Suite 100
Lincolnwood, IL 60712, U.S.A.
Phone: (800)247-6113, (847)675-0720, Fax: (847)675-2140
Copyright by Scientific Software International, Inc., 1981-2006
Use of this program is subject to the terms specified in the
Universal Copyright Convention.
Website: www.ssicentral.com

The following lines were read from file E:\THESIS\2 EL\EL.Spl:

UJI VALIDITAS ELOYALTY
DA NI=29 NO=255 MA=CM
LA
ES1 ES2 ES3 ES4
EL1 EL2 EL3 EL4
ET1 ET2 ET3
PDT1 PDT2 PDT3

```
WSD1 WSD2 WSD3 WSD4 WSD5
POS1 POS2 POS3 POS4 POS5
POP1 POP2 POP3 POP4 POP5
CM FI=URUTS.COV
SE
5 6 7 8 /
MO NY=4 NE=1 LY=FU, FI TE=SY,
FI PS=DI
LE
ELOYALTY
FR LY 1 1 LY 2 1 LY 3 1 LY 4 1
FR TE 1 1 TE 2 2 TE 3 3 TE 4 4

PD
OU MI

UJI VALIDITAS ELOYALTY

                Number of Input
Variables 29
                Number of Y -
Variables    4
                Number of X -
Variables    0
                Number of ETA -
Variables  1
                Number of KSI -
Variables  0
                Number of
Observations   255

UJI VALIDITAS ELOYALTY

      Covariance Matrix
```

```
                EL1       EL2       EL3
EL4
          --------  --------  --------  -------
-
     EL1      0.84
     EL2      0.52      0.84
     EL3      0.60      0.53      1.24
     EL4      0.57      0.60      0.72
1.03

UJI VALIDITAS ELOYALTY

Parameter Specifications

      LAMBDA-Y

        ELOYALTY
        --------
     EL1        0
     EL2        1
     EL3        2
     EL4        3

      PSI

        ELOYALTY
        --------
            4

      THETA-EPS

                EL1       EL2       EL3
EL4
          --------  --------  --------  -------
-
                5         6         7         8


UJI VALIDITAS ELOYALTY

Number of Iterations =  4

LISREL Estimates (Maximum
Likelihood)
```

LAMBDA-Y

	ELOYALTY
EL1	0.71
EL2	0.70
	(0.06)
	12.02
EL3	0.82
	(0.07)
	11.57
EL4	0.84
	(0.07)
	12.90

Covariance Matrix of ETA

ELOYALTY
1.00

PSI

ELOYALTY
1.00
(0.14)
6.92

THETA-EPS

EL1	EL2	EL3	EL4
0.33	0.35	0.56	0.32
(0.04)	(0.04)	(0.06)	(0.05)
8.42	8.62	9.04	7.13

Squared Multiple Correlations for Y - Variables

EL1	EL2	EL3	EL4
0.60	0.59	0.55	0.69

Goodness of Fit Statistics

Degrees of Freedom = 2

Minimum Fit Function Chi-Square = 8.32 (P = 0.016)

Normal Theory Weighted Least Squares Chi-Square = 7.79 (P = 0.020)

Estimated Non-centrality Parameter (NCP) = 5.79

90 Percent Confidence Interval for NCP = (0.65 ; 18.41)

Minimum Fit Function Value = 0.033

Population Discrepancy Function Value (F0) = 0.023

90 Percent Confidence Interval for F0 = (0.0026 ; 0.072)

Root Mean Square Error of Approximation (RMSEA) = 0.11

90 Percent Confidence Interval for RMSEA = (0.036 ; 0.19)

P-Value for Test of Close Fit (RMSEA < 0.05) = 0.084

Expected Cross-Validation Index (ECVI) = 0.094

90 Percent Confidence Interval for ECVI = (0.073 ; 0.14)

ECVI for Saturated Model = 0.079

ECVI for Independence Model = 2.23

Chi-Square for Independence Model with 6 Degrees of Freedom = 559.67

Independence AIC = 567.67

Model AIC = 23.79

Saturated AIC = 20.00

Independence CAIC = 585.84

Model CAIC = 60.12

Saturated CAIC = 65.41

Normed Fit Index (NFI) = 0.99

Non-Normed Fit Index (NNFI) = 0.97

Parsimony Normed Fit Index (PNFI) = 0.33

Comparative Fit Index (CFI) = 0.99

Incremental Fit Index (IFI) = 0.99

Relative Fit Index (RFI) = 0.96

Critical N (CN) = 282.25

Root Mean Square Residual (RMR) = 0.022

Standardized RMR = 0.022

Goodness of Fit Index (GFI) = 0.98

Adjusted Goodness of Fit Index (AGFI) = 0.92

Parsimony Goodness of Fit Index (PGFI) = 0.20

Modification Indices and Expected Change

No Non-Zero Modification Indices for LAMBDA-Y

No Non-Zero Modification Indices for PSI

Modification Indices for THETA-EPS

	EL1	EL2	EL3	EL4
EL1	- -			
EL2	3.55	- -		
EL3	0.66	7.43	- -	
EL4	7.43	0.66	3.55	- -

Expected Change for THETA-EPS

	EL1	EL2	EL3	EL4
EL1	- -			
EL2	0.07	- -		
EL3	0.03	-0.11	- -	
EL4	-0.12	0.03	0.09	- -

Maximum Modification Index is 7.43 for Element (4, 1) of THETA-EPS

Time used: 0.031 Seconds

UJI VALIDITAS ELOYALTY

2. E-SATISFACTION

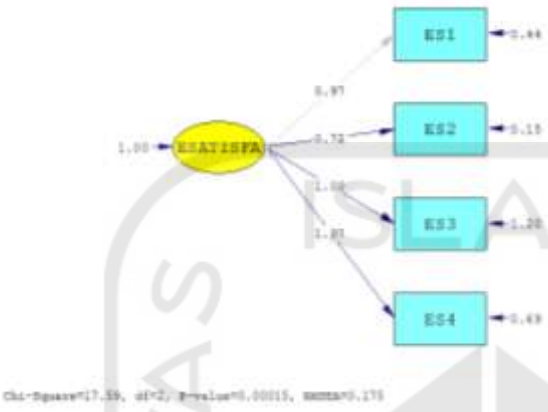

DATE: 11/23/2018
TIME: 4:39

L I S R E L 8.80

BY

Karl G. Jöreskog & Dag Sörbom

This program is published exclusively by
Scientific Software International, Inc.
7383 N. Lincoln Avenue, Suite 100
Lincolnwood, IL 60712, U.S.A.
Phone: (800)247-6113, (847)675-0720, Fax: (847)675-2140
Copyright by Scientific Software International, Inc., 1981-2006
Use of this program is subject to the terms specified in the
Universal Copyright Convention.
Website: www.ssicentral.com

The following lines were read from file E:\THESIS\1 ES\ES.Spl:

UJI VALIDITAS ELOYALTY
DA NI=29 NO=255 MA=CM
LA
ES1 ES2 ES3 ES4
EL1 EL2 EL3 EL4
ET1 ET2 ET3
PDT1 PDT2 PDT3
WSD1 WSD2 WSD3 WSD4 WSD5

POS1 POS2 POS3 POS4 POS5
POP1 POP2 POP3 POP4 POP5
CM FI=URUTS.COV
SE
1 2 3 4 /
MO NY=4 NE=1 LY=FU, FI TE=SY, FI
PS=DI
LE
ESATISFACTION
FR LY 1 1 LY 2 1 LY 3 1 LY 4 1
FR TE 1 1 TE 2 2 TE 3 3 TE 4 4

PD
OU MI

UJI VALIDITAS ELOYALTY

Number of Input Variables 29
Number of Y - Variables 4
Number of X - Variables 0
Number of ETA - Variables
1
Number of KSI - Variables 0
Number of Observations
255

UJI VALIDITAS ELOYALTY

Covariance Matrix

	ES1	ES2	ES3	ES4
ES1	1.38			
ES2	0.72	0.67		
ES3	0.88	0.71	2.21	
ES4	1.02	0.74	1.25	1.83

UJI VALIDITAS ELOYALTY

Parameter Specifications

LAMBDA-Y

	ESATISFA
ES1	0
ES2	1
ES3	2
ES4	3

PSI

ESATISFA
4

THETA-EPS

ES1	ES2	ES3	ES4
5	6	7	8

UJI VALIDITAS ELOYALTY

Number of Iterations = 6

LISREL Estimates (Maximum Likelihood)

LAMBDA-Y

	ESATISFA
ES1	0.97
ES2	0.72
	(0.05)
	15.38
ES3	1.00
	(0.09)
	11.32
ES4	1.07
	(0.08)
	13.80

Covariance Matrix of ETA

ESATISFA
1.00

PSI

ESATISFA
1.00
(0.13)
7.65

THETA-EPS

ES1	ES2	ES3	ES4
0.44	0.15	1.20	0.69
(0.06)	(0.02)	(0.12)	(0.08)
7.97	6.16	10.05	8.77

Squared Multiple Correlations for Y - Variables

ES1	ES2	ES3	ES4
0.68	0.77	0.46	0.62

Goodness of Fit Statistics

Degrees of Freedom = 2
Minimum Fit Function Chi-Square = 17.26 (P = 0.00018)
Normal Theory Weighted Least Squares Chi-Square = 17.59 (P = 0.00015)
Estimated Non-centrality Parameter (NCP) = 15.59
90 Percent Confidence Interval for NCP = (5.71 ; 32.91)

Minimum Fit Function Value = 0.068
Population Discrepancy Function Value (F0) = 0.061
90 Percent Confidence Interval for F0 = (0.022 ; 0.13)
Root Mean Square Error of Approximation (RMSEA) = 0.18
90 Percent Confidence Interval for RMSEA = (0.11 ; 0.25)
P-Value for Test of Close Fit (RMSEA < 0.05) = 0.0022

Expected Cross-Validation Index (ECVI) = 0.13
90 Percent Confidence Interval for ECVI = (0.093 ; 0.20)
ECVI for Saturated Model = 0.079
ECVI for Independence Model = 2.42

Chi-Square for Independence Model with 6 Degrees of Freedom = 607.61
Independence AIC = 615.61
Model AIC = 33.59
Saturated AIC = 20.00
Independence CAIC = 633.77
Model CAIC = 69.92
Saturated CAIC = 65.41

Normed Fit Index (NFI) = 0.97
Non-Normed Fit Index (NNFI) = 0.92
Parsimony Normed Fit Index (PNFI) = 0.32
Comparative Fit Index (CFI) = 0.97
Incremental Fit Index (IFI) = 0.97
Relative Fit Index (RFI) = 0.91

Critical N (CN) = 136.52

Root Mean Square Residual (RMR) = 0.065
Standardized RMR = 0.035
Goodness of Fit Index (GFI) = 0.97
Adjusted Goodness of Fit Index (AGFI) = 0.83
Parsimony Goodness of Fit Index (PGFI) = 0.19

UJI VALIDITAS ELOYALTY

Modification Indices and Expected Change

No Non-Zero Modification Indices for LAMBDA-Y

No Non-Zero Modification Indices for PSI

Modification Indices for THETA-EPS

	ES1	ES2	ES3	ES4
ES1	- -			
ES2	15.99	- -		
ES3	8.44	0.81	- -	
ES4	0.81	8.44	15.99	- -

Expected Change for THETA-EPS

	ES1	ES2	ES3	ES4
ES1	- -			

ES2	0.19	- -		
ES3	-0.19	-0.04	- -	
ES4	-0.06	-0.15	0.30	- -

Maximum Modification Index is 15.99 for Element (2, 1) of THETA-EPS

Time used: 0.016 Seconds

3. E-TRUST

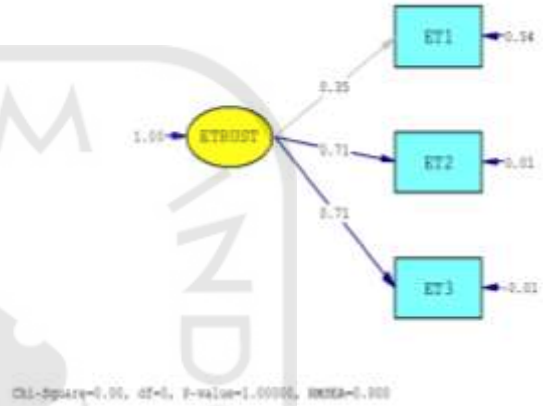

DATE: 1/19/2019
TIME: 15:19

L I S R E L 8.80

BY

Karl G. Jöreskog & Dag Sörbom

This program is published exclusively by
Scientific Software International, Inc.
7383 N. Lincoln Avenue, Suite 100
Lincolnwood, IL 60712, U.S.A.
Phone: (800)247-6113, (847)675-0720, Fax: (847)675-2140
Copyright by Scientific Software International, Inc., 1981-2006
Use of this program is subject to the terms specified in the
Universal Copyright Convention.
Website: www.ssicentral.com

The following lines were read from file E:\THESIS\3 ET\ET1.Spl:

UJI VALIDITAS ELOYALTY
DA NI=29 NO=255 MA=CM
LA
ES1 ES2 ES3 ES4
EL1 EL2 EL3 EL4
ET1 ET2 ET3
PDT1 PDT2 PDT3
WSD1 WSD2 WSD3 WSD4 WSD5
POS1 POS2 POS3 POS4 POS5
POP1 POP2 POP3 POP4 POP5
CM FI=URUTS.COV
SE
9 10 11 /
MO NY=3 NE=1 LY=FU, FI TE=SY, FI PS=DI
LE
ETRUST
FR LY 1 1 LY 2 1 LY 3 1
FR TE 1 1 TE 2 2 TE 3 3

PD
OU MI FS

UJI VALIDITAS ELOYALTY

Number of Input Variables 29
Number of Y - Variables 3
Number of X - Variables 0
Number of ETA - Variables 1
Number of KSI - Variables 0
Number of Observations 255

W_A_R_N_I_N_G: Matrix to be analyzed is not positive definite,
ridge option taken with ridge constant = 0.001

UJI VALIDITAS ELOYALTY

Covariance Matrix

	ET1	ET2	ET3
ET1	0.67		
ET2	0.25	0.51	
ET3	0.25	0.50	0.50

UJI VALIDITAS ELOYALTY

Parameter Specifications

LAMBDA-Y

	ETRUST
ET1	0
ET2	1
ET3	2

PSI

ETRUST
3

THETA-EPS

ET1	ET2	ET3
4	5	6

UJI VALIDITAS ELOYALTY

Number of Iterations = 0

LISREL Estimates (Maximum Likelihood)

LAMBDA-Y

	ETRUST
ET1	0.35
ET2	0.71
	(0.09)
	7.73
ET3	0.71
	(0.09)
	7.62

Covariance Matrix of ETA

ETRUST
1.00

PSI

ETRUST

1.00
(0.28)
3.63

THETA-EPS

ET1	ET2	ET3
0.54	0.01	-0.01
(0.05)	(0.00)	(0.00)
11.27	2.93	-2.59

Squared Multiple Correlations for Y - Variables

ET1	ET2	ET3
0.19	0.98	1.02

Goodness of Fit Statistics

Degrees of Freedom = 0

Minimum Fit Function Chi-Square = 0.00 (P = 1.00)

Normal Theory Weighted Least Squares Chi-Square = 0.00 (P = 1.00)

The Model is Saturated, the Fit is Perfect !

UJI VALIDITAS ELOYALTY

Modification Indices and Expected Change

No Non-Zero Modification Indices for LAMBDA-Y

No Non-Zero Modification Indices for PSI

No Non-Zero Modification Indices for THETA-EPS

UJI VALIDITAS ELOYALTY

Factor Scores Regressions

ETA

ET1	ET2	ET3

ETRUST ETRUST -0.10 -12.06 13.72

Time used: 0.031 Secon

4. PERCEIVED DELIVERY TIME

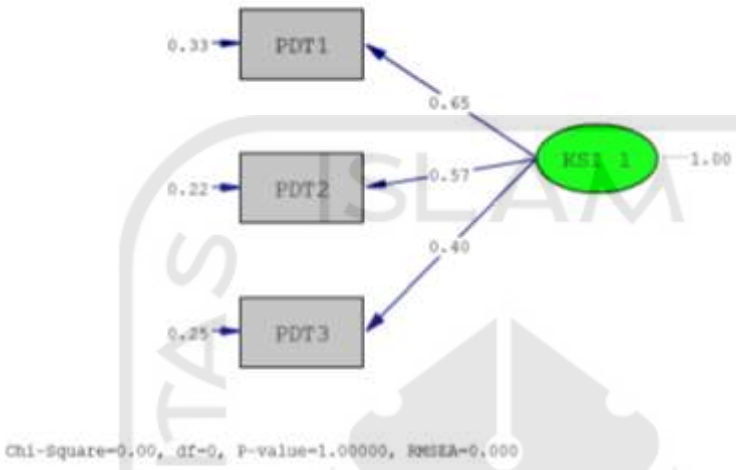

DATE: 12/28/2018
TIME: 11:06

L I S R E L 8.80

BY

Karl G. Jöreskog & Dag Sörbom

This program is published exclusively by
Scientific Software International, Inc.
7383 N. Lincoln Avenue, Suite 100
Lincolnwood, IL 60712, U.S.A.
Phone: (800)247-6113, (847)675-0720, Fax: (847)675-2140
Copyright by Scientific Software International, Inc., 1981-2006
Use of this program is subject to the terms specified in the
Universal Copyright Convention.
Website: www.ssicentral.com

The following lines were read from file E:\THESIS\4 PDT\PDT1.Spl:

```
DA NI=29 NO=255 MA=CM
LA
ES1 ES2 ES3 ES4
EL1 EL2 EL3 EL4
ET1 ET2 ET3
PDT1 PDT2 PDT3
WSD1 WSD2 WSD3 WSD4 WSD5
POS1 POS2 POS3 POS4 POS5
```

POP1 POP2 POP3 POP4 POP5
CM FI=URUTS.COV
SE
12 13 14 /
MO NX=3 NK=1 LX=FU, FI TD=DI, FI
PH=DI, FR
LE
PDT
FR LX 1 1 LX 2 1 LX 3 1
FR TD 1 1 TD 2 2 TD 3 3

PD
OU MI FS

DA NI=29 NO=255 MA=CM

Number of Input Variables 29
Number of Y - Variables 0
Number of X - Variables 3
Number of ETA - Variables
0
Number of KSI - Variables 1
Number of Observations
255

DA NI=29 NO=255 MA=CM

Covariance Matrix

	PDT1	PDT2	PDT3
PDT1	0.75		
PDT2	0.37	0.55	
PDT3	0.26	0.23	0.41

DA NI=29 NO=255 MA=CM

Parameter Specifications

LAMBDA-X

	KSI 1
PDT1	1
PDT2	2
PDT3	3

THETA-DELTA

PDT1	PDT2	PDT3
4	5	6

DA NI=29 NO=255 MA=CM

Number of Iterations = 0

LISREL Estimates (Maximum Likelihood)

LAMBDA-X

	KSI 1
PDT1	0.65
	(0.06)
	11.34
PDT2	0.57
	(0.05)
	11.57
PDT3	0.40
	(0.04)
	9.53

PHI

	KSI 1
	1.00

THETA-DELTA

PDT1	PDT2	PDT3
0.33	0.22	0.25
(0.05)	(0.04)	(0.03)
6.09	5.63	9.02

Squared Multiple Correlations for X - Variables

PDT1	PDT2	PDT3
0.57	0.59	0.39

Goodness of Fit Statistics

Degrees of Freedom = 0
Minimum Fit Function Chi-Square = 0.00 (P = 1.00)
Normal Theory Weighted Least Squares Chi-Square = 0.00 (P = 1.00)

The Model is Saturated, the Fit is Perfect !

DA NI=29 NO=255 MA=CM

Modification Indices and Expected Change

No Non-Zero Modification Indices for LAMBDA-X

No Non-Zero Modification Indices for PHI

No Non-Zero Modification Indices for THETA-DELTA

DA NI=29 NO=255 MA=CM

Factor Scores Regressions

KSI

	PDT1	PDT2	PDT3
KSI 1	0.46	0.58	0.36

Time used: 0.031 Seconds

5. WEB SITE DESIGN

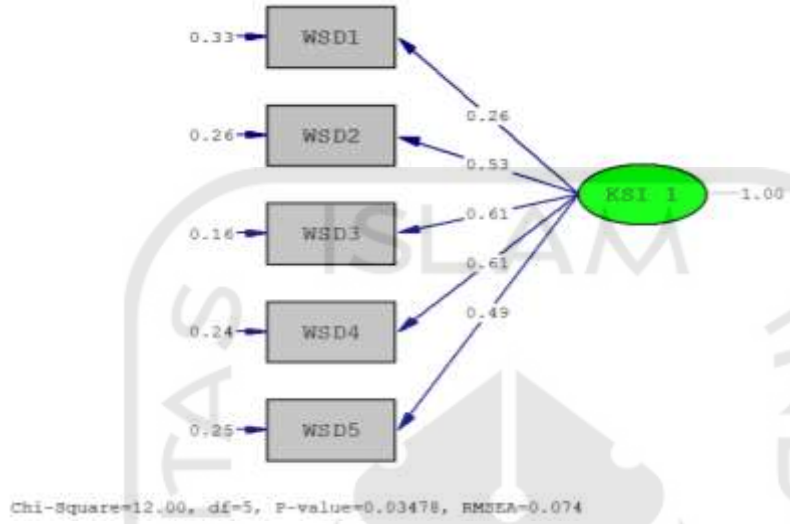

DATE: 11/23/2018
TIME: 4:51

L I S R E L 8.80

BY

Karl G. Jöreskog & Dag Sörbom

This program is published exclusively by
Scientific Software International, Inc.
7383 N. Lincoln Avenue, Suite 100
Lincolnwood, IL 60712, U.S.A.
Phone: (800)247-6113, (847)675-0720, Fax: (847)675-2140
Copyright by Scientific Software International, Inc., 1981-2006
Use of this program is subject to the terms specified in the
Universal Copyright Convention.
Website: www.ssicentral.com

The following lines were read from file E:\THESIS\5 WSD\WSD.Spl:

DA NI=29 NO=255 MA=CM
LA
ES1 ES2 ES3 ES4
EL1 EL2 EL3 EL4
ET1 ET2 ET3
PDT1 PDT2 PDT3
WSD1 WSD2 WSD3 WSD4 WSD5
POS1 POS2 POS3 POS4 POS5
POP1 POP2 POP3 POP4 POP5

CM FI=URUTS.COV
SE
15 16 17 18 19 /
MO NX=5 NK=1 LX=FU, FI TD=DI, FI PH=DI, FR
LE
WSD
FR LX 1 1 LX 2 1 LX 3 1 LX 4 1 LX 5 1
FR TD 1 1 TD 2 2 TD 3 3 TD 4 4 TD 5 5

PD
OU MI

DA NI=29 NO=255 MA=CM

Number of Input Variables 29
Number of Y - Variables 0
Number of X - Variables 5
Number of ETA - Variables 0
Number of KSI - Variables 1
Number of Observations 255

DA NI=29 NO=255 MA=CM

Covariance Matrix

	WSD1	WSD2	WSD3	WSD4	WSD5
WSD1	0.40				
WSD2	0.14	0.55			
WSD3	0.13	0.33	0.54		
WSD4	0.19	0.33	0.37	0.62	
WSD5	0.13	0.24	0.31	0.29	0.49

DA NI=29 NO=255 MA=CM

Parameter Specifications

LAMBDA-X

	KSI 1

WSD1 1
WSD2 2
WSD3 3
WSD4 4
WSD5 5

THETA-DELTA

WSD1 WSD2 WSD3 WSD4 WSD5
-------- -------- -------- -------- --------
6 7 8 9 10

DA NI=29 NO=255 MA=CM

Number of Iterations = 7

LISREL Estimates (Maximum Likelihood)

LAMBDA-X

KSI 1

WSD1 0.26
(0.04)
6.33
WSD2 0.53
(0.04)
12.37
WSD3 0.61
(0.04)
15.29
WSD4 0.61
(0.04)
13.74
WSD5 0.49
(0.04)
11.87

PHI

KSI 1

1.00

THETA-DELTA

WSD1 WSD2 WSD3 WSD4 WSD5
-------- -------- -------- -------- --------
0.33 0.26 0.16 0.24 0.25
(0.03) (0.03) (0.02) (0.03) (0.03)
10.90 9.21 6.62 8.26 9.46

Squared Multiple Correlations for X - Variables

WSD1 WSD2 WSD3 WSD4 WSD5
-------- -------- -------- -------- --------
0.17 0.52 0.70 0.60 0.48

Goodness of Fit Statistics

Degrees of Freedom = 5
Minimum Fit Function Chi-Square = 12.17 (P = 0.033)
Normal Theory Weighted Least Squares Chi-Square = 12.00 (P = 0.035)
Estimated Non-centrality Parameter (NCP) = 7.00
90 Percent Confidence Interval for NCP = (0.43 ; 21.20)

Minimum Fit Function Value = 0.048
Population Discrepancy Function Value (F0) = 0.028
90 Percent Confidence Interval for F0 = (0.0017 ; 0.083)
Root Mean Square Error of Approximation (RMSEA) = 0.074
90 Percent Confidence Interval for RMSEA = (0.018 ; 0.13)
P-Value for Test of Close Fit (RMSEA < 0.05) = 0.19

Expected Cross-Validation Index (ECVI) = 0.13
90 Percent Confidence Interval for ECVI = (0.10 ; 0.18)
ECVI for Saturated Model = 0.12
ECVI for Independence Model = 2.42

Chi-Square for Independence Model with 10 Degrees of Freedom = 605.46
Independence AIC = 615.46
Model AIC = 32.00
Saturated AIC = 30.00
Independence CAIC = 638.17
Model CAIC = 77.41
Saturated CAIC = 98.12

Normed Fit Index (NFI) = 0.98
Non-Normed Fit Index (NNFI) = 0.98
Parsimony Normed Fit Index (PNFI) = 0.49
Comparative Fit Index (CFI) = 0.99
Incremental Fit Index (IFI) = 0.99
Relative Fit Index (RFI) = 0.96

Critical N (CN) = 315.86

Root Mean Square Residual (RMR) = 0.014
Standardized RMR = 0.029
Goodness of Fit Index (GFI) = 0.98
Adjusted Goodness of Fit Index (AGFI) = 0.94
Parsimony Goodness of Fit Index (PGFI) = 0.33

DA NI=29 NO=255 MA=CM

Modification Indices and Expected Change

No Non-Zero Modification Indices for LAMBDA-X

No Non-Zero Modification Indices for PHI

Modification Indices for THETA-DELTA

	WSD1	WSD2	WSD3	WSD4	WSD5
WSD1	- -				
WSD2	0.00	- -			
WSD3	7.15	0.77	- -		
WSD4	6.03	0.40	1.55	- -	
WSD5	0.34	2.74	4.00	0.60	- -

Expected Change for THETA-DELTA

	WSD1	WSD2	WSD3	WSD4	WSD5
WSD1	- -				
WSD2	0.00	- -			
WSD3	-0.05	0.02	- -		
WSD4	0.05	0.02	-0.04	- -	
WSD5	0.01	-0.04	0.05	-0.02	- -

Maximum Modification Index is 7.15 for Element (3, 1) of THETA-DELTA

Time used: 0.016 Seconds

6. PERCEIVED ONLINE SECURITY

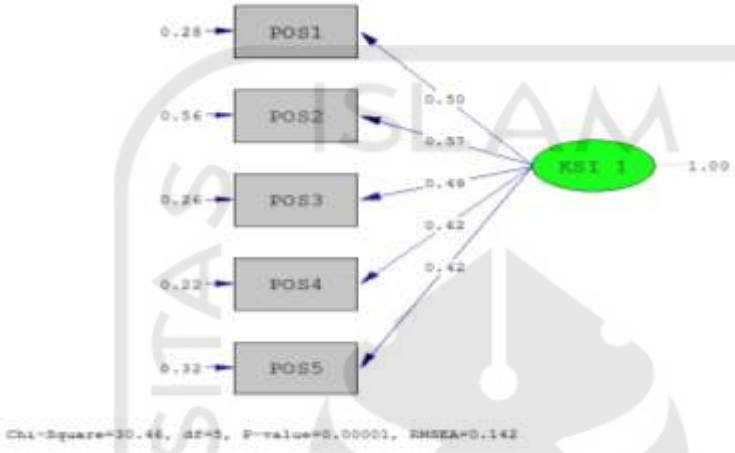

DATE: 11/22/2018
TIME: 13:00

L I S R E L 8.80

BY

Karl G. Jöreskog & Dag Sörbom

This program is published exclusively by
Scientific Software International, Inc.
7383 N. Lincoln Avenue, Suite 100
Lincolnwood, IL 60712, U.S.A.
Phone: (800)247-6113, (847)675-0720, Fax: (847)675-2140
Copyright by Scientific Software International, Inc., 1981-2006
Use of this program is subject to the terms specified in the
Universal Copyright Convention.
Website: www.ssicentral.com

The following lines were read from file E:\THESIS\6 POS\POSF.Spl:

DA NI=29 NO=255 MA=CM
LA
ES1 ES2 ES3 ES4
EL1 EL2 EL3 EL4
ET1 ET2 ET3
PDT1 PDT2 PDT3
WSD1 WSD2 WSD3 WSD4 WSD5
POS1 POS2 POS3 POS4 POS5
POP1 POP2 POP3 POP4 POP5

CM FI=URUTS.COV
SE
20 21 22 23 24 /
MO NX=5 NK=1 LX=FU, FI TD=DI, FI PH=DI, FR
LE
POS
FR LX 1 1 LX 2 1 LX 3 1 LX 4 1 LX 5 1
FR TD 1 1 TD 2 2 TD 3 3 TD 4 4 TD 5 5

PD
OU MI

DA NI=29 NO=255 MA=CM

Number of Input Variables 29
Number of Y - Variables 0
Number of X - Variables 5
Number of ETA - Variables 0
Number of KSI - Variables 1
Number of Observations 255

DA NI=29 NO=255 MA=CM

Covariance Matrix

	POS1	POS2	POS3	POS4	POS5
POS1	0.54				
POS2	0.25	0.89			
POS3	0.23	0.34	0.50		
POS4	0.36	0.33	0.28	0.61	
POS5	0.17	0.26	0.25	0.25	0.49

DA NI=29 NO=255 MA=CM

Parameter Specifications

LAMBDA-X

	KSI 1
POS1	1
POS2	2
POS3	3
POS4	4

POS5 5

THETA-DELTA

POS1 POS2 POS3 POS4 POS5
-------- -------- -------- -------- --------
6 7 8 9 10

DA NI=29 NO=255 MA=CM

Number of Iterations = 7

LISREL Estimates (Maximum Likelihood)

LAMBDA-X

KSI 1

POS1 0.50
(0.04)
11.34
POS2 0.57
(0.06)
9.74
POS3 0.49
(0.04)
11.60
POS4 0.62
(0.05)
13.64
POS5 0.42
(0.04)
9.62

PHI

KSI 1

1.00

THETA-DELTA

POS1 POS2 POS3 POS4 POS5
-------- -------- -------- -------- --------
0.28 0.56 0.26 0.22 0.32
(0.03) (0.06) (0.03) (0.03) (0.03)
9.03 9.83 8.87 7.03 9.87

Squared Multiple Correlations for X - Variables

POS1 POS2 POS3 POS4 POS5
-------- -------- -------- -------- --------
0.47 0.37 0.49 0.63 0.36

Goodness of Fit Statistics

Degrees of Freedom = 5
Minimum Fit Function Chi-Square = 27.90 (P = 0.00)
Normal Theory Weighted Least Squares Chi-Square = 30.46 (P = 0.00)
Estimated Non-centrality Parameter (NCP) = 25.46
90 Percent Confidence Interval for NCP = (11.66 ; 46.75)

Minimum Fit Function Value = 0.11
Population Discrepancy Function Value (F0) = 0.10
90 Percent Confidence Interval for F0 = (0.046 ; 0.18)
Root Mean Square Error of Approximation (RMSEA) = 0.14
90 Percent Confidence Interval for RMSEA = (0.096 ; 0.19)
P-Value for Test of Close Fit (RMSEA < 0.05) = 0.00088

Expected Cross-Validation Index (ECVI) = 0.20
90 Percent Confidence Interval for ECVI = (0.14 ; 0.28)
ECVI for Saturated Model = 0.12
ECVI for Independence Model = 2.20

Chi-Square for Independence Model with 10 Degrees of Freedom = 548.37
Independence AIC = 558.37
Model AIC = 50.46
Saturated AIC = 30.00

Independence CAIC = 581.08

Model CAIC = 95.88

Saturated CAIC = 98.12

Normed Fit Index (NFI) = 0.95

Non-Normed Fit Index (NNFI) = 0.91

Parsimony Normed Fit Index (PNFI) = 0.47

Comparative Fit Index (CFI) = 0.96

Incremental Fit Index (IFI) = 0.96

Relative Fit Index (RFI) = 0.90

Critical N (CN) = 138.36

Root Mean Square Residual (RMR) = 0.027

Standardized RMR = 0.047

Goodness of Fit Index (GFI) = 0.95

Adjusted Goodness of Fit Index (AGFI) = 0.86

Parsimony Goodness of Fit Index (PGFI) = 0.32

DA NI=29 NO=255 MA=CM

Modification Indices and Expected Change

No Non-Zero Modification Indices for LAMBDA-X

No Non-Zero Modification Indices for PHI

Modification Indices for THETA-DELTA

	POS1	POS2	POS3	POS4	POS5
POS1	- -				
POS2	3.78	- -			
POS3	2.49	8.05	- -		
POS4	28.53	2.37	10.11	- -	
POS5	7.33	0.84	7.38	0.58	- -

Expected Change for THETA-DELTA

	POS1	POS2	POS3	POS4	POS5
POS1	- -				
POS2	-0.06	- -			
POS3	-0.04	0.09	- -		
POS4	0.15	-0.05	-0.09	- -	
POS5	-0.06	0.03	0.06	-0.02	- -

Maximum Modification Index is 28.53 for Element (4, 1) of THETA-DELTA

Time used: 0.031 Second

7. PERCEIVED ONLINE PRIVACY

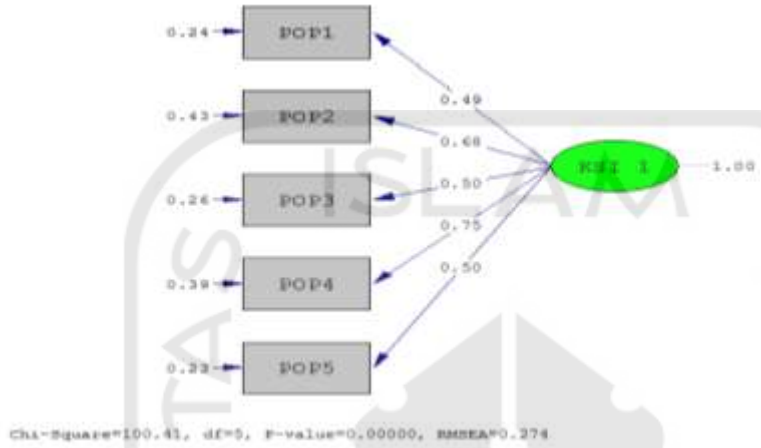

DATE: 11/23/2018
TIME: 4:53

L I S R E L 8.80

BY

Karl G. Jöreskog & Dag Sörbom

This program is published exclusively by
Scientific Software International, Inc.
7383 N. Lincoln Avenue, Suite 100
Lincolnwood, IL 60712, U.S.A.
Phone: (800)247-6113, (847)675-0720, Fax: (847)675-2140
Copyright by Scientific Software International, Inc., 1981-2006
Use of this program is subject to the terms specified in the
Universal Copyright Convention.
Website: www.ssicentral.com

The following lines were read from file E:\THESIS\7 POP\POP.Spl:

```
DA NI=29 NO=255 MA=CM
LA
ES1 ES2 ES3 ES4
EL1 EL2 EL3 EL4
ET1 ET2 ET3
PDT1 PDT2 PDT3
WSD1 WSD2 WSD3 WSD4 WSD5
```

POS1 POS2 POS3 POS4 POS5
POP1 POP2 POP3 POP4 POP5
CM FI=URUTS.COV
SE
25 26 27 28 29 /
MO NX=5 NK=1 LX=FU, FI TD=DI, FI PH=DI, FR
LE
POP
FR LX 1 1 LX 2 1 LX 3 1 LX 4 1 LX 5 1
FR TD 1 1 TD 2 2 TD 3 3 TD 4 4 TD 5 5

PD
OU MI

DA NI=29 NO=255 MA=CM

Number of Input Variables 29
Number of Y - Variables 0
Number of X - Variables 5
Number of ETA - Variables 0
Number of KSI - Variables 1
Number of Observations 255

DA NI=29 NO=255 MA=CM

Covariance Matrix

	POP1	POP2	POP3	POP4	POP5
POP1	0.47				
POP2	0.46	0.89			
POP3	0.22	0.35	0.51		
POP4	0.31	0.44	0.40	0.95	
POP5	0.23	0.27	0.25	0.46	0.48

DA NI=29 NO=255 MA=CM

Parameter Specifications

LAMBDA-X

	KSI 1
POP1	1
POP2	2
POP3	3
POP4	4
POP5	5

THETA-DELTA

POP1	POP2	POP3	POP4	POP5
6	7	8	9	10

DA NI=29 NO=255 MA=CM

Number of Iterations = 10

LISREL Estimates (Maximum Likelihood)

LAMBDA-X

	KSI 1
POP1	0.49
	(0.04)
	11.99
POP2	0.68
	(0.06)
	12.27
POP3	0.50
	(0.04)
	11.89
POP4	0.75
	(0.06)
	13.57
POP5	0.50
	(0.04)
	12.52

PHI

	KSI 1
KSI 1	1.00

THETA-DELTA

POP1	POP2	POP3	POP4	POP5
0.24	0.43	0.26	0.39	0.23
(0.03)	(0.05)	(0.03)	(0.05)	(0.03)

9.24 9.09 9.29 8.20 8.94

Squared Multiple Correlations for X - Variables

POP1 POP2 POP3 POP4 POP5
-------- -------- -------- -------- --------
0.50 0.51 0.49 0.60 0.53

Goodness of Fit Statistics

Degrees of Freedom = 5
Minimum Fit Function Chi-Square = 98.16 (P = 0.0)
Normal Theory Weighted Least Squares Chi-Square = 100.41 (P = 0.0)
Estimated Non-centrality Parameter (NCP) = 95.41
90 Percent Confidence Interval for NCP = (66.49 ; 131.75)

Minimum Fit Function Value = 0.39
Population Discrepancy Function Value (F0) = 0.38
90 Percent Confidence Interval for F0 = (0.26 ; 0.52)
Root Mean Square Error of Approximation (RMSEA) = 0.27
90 Percent Confidence Interval for RMSEA = (0.23 ; 0.32)
P-Value for Test of Close Fit (RMSEA < 0.05) = 0.00

Expected Cross-Validation Index (ECVI) = 0.47
90 Percent Confidence Interval for ECVI = (0.36 ; 0.62)
ECVI for Saturated Model = 0.12
ECVI for Independence Model = 2.88

Chi-Square for Independence Model with 10 Degrees of Freedom = 722.67
Independence AIC = 732.67
Model AIC = 120.41
Saturated AIC = 30.00

Independence CAIC = 755.38
Model CAIC = 165.82
Saturated CAIC = 98.12

Normed Fit Index (NFI) = 0.86
Non-Normed Fit Index (NNFI) = 0.74
Parsimony Normed Fit Index (PNFI) = 0.43
Comparative Fit Index (CFI) = 0.87
Incremental Fit Index (IFI) = 0.87
Relative Fit Index (RFI) = 0.73

Critical N (CN) = 40.04

Root Mean Square Residual (RMR) = 0.051
Standardized RMR = 0.077
Goodness of Fit Index (GFI) = 0.86
Adjusted Goodness of Fit Index (AGFI) = 0.59
Parsimony Goodness of Fit Index (PGFI) = 0.29

DA NI=29 NO=255 MA=CM

Modification Indices and Expected Change

No Non-Zero Modification Indices for LAMBDA-X

No Non-Zero Modification Indices for PHI

Modification Indices for THETA-DELTA

	POP1	POP2	POP3	POP4	POP5
POP1	- -				
POP2	79.82	- -			
POP3	4.82	0.67	- -		
POP4	22.13	15.57	2.60	- -	
POP5	2.99	27.92	0.15	47.98	- -

Expected Change for THETA-DELTA

	POP1	POP2	POP3	POP4	POP5
POP1	- -				
POP2	0.24	- -			
POP3	-0.05	0.02	- -		
POP4	-0.13	-0.15	0.05	- -	
POP5	-0.03	-0.14	-0.01	0.20	- -

Maximum Modification Index is 79.82 for Element (2, 1) of THETA-DELTA

Time used: 0.031 Second

APPENDIX E

THE RESULT OF MODEL MEASUREMENT AFTER MODIFICATION

1. E-LOYALTY

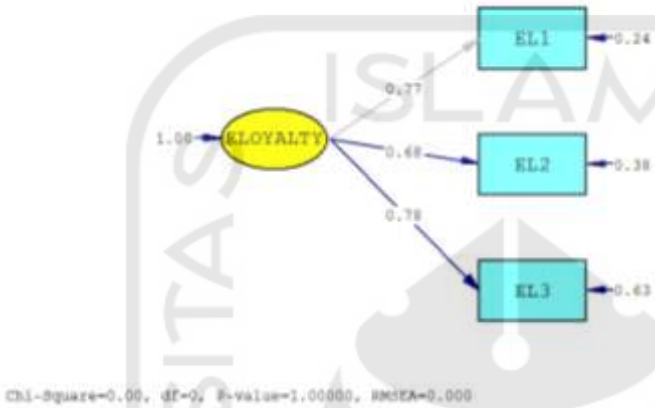

DATE: 12/28/2018
TIME: 10:44

L I S R E L 8.80
BY
Karl G. Jöreskog & Dag Sörbom
This program is published exclusively by
Scientific Software International, Inc.
7383 N. Lincoln Avenue, Suite 100
Lincolnwood, IL 60712, U.S.A.
Phone: (800)247-6113, (847)675-0720, Fax: (847)675-2140
Copyright by Scientific Software International, Inc., 1981-2006
Use of this program is subject to the terms specified in the
Universal Copyright Convention.
Website: www.ssicentral.com

The following lines were read from file E:\THESIS\2 EL\EL1.Spl:

```
UJI VALIDITAS ELOYALTY
DA NI=29 NO=255 MA=CM
LA
ES1 ES2 ES3 ES4
EL1 EL2 EL3 EL4
ET1 ET2 ET3
PDT1 PDT2 PDT3
WSD1 WSD2 WSD3 WSD4 WSD5
POS1 POS2 POS3 POS4 POS5
POP1 POP2 POP3 POP4 POP5
CM FI=URUTS.COV
SE
```

5 6 7 /
MO NY=3 NE=1 LY=FU, FI TE=SY, FI PS=DI
LE
ELOYALTY
FR LY 1 1 LY 2 1 LY 3 1
FR TE 1 1 TE 2 2 TE 3 3

PD
OU MI FS

UJI VALIDITAS ELOYALTY

Number of Input Variables 29
Number of Y - Variables 3
Number of X - Variables 0
Number of ETA - Variables 1
Number of KSI - Variables 0
Number of Observations 255

UJI VALIDITAS ELOYALTY

Covariance Matrix

	EL1	EL2	EL3
EL1	0.84		
EL2	0.52	0.84	
EL3	0.60	0.53	1.24

UJI VALIDITAS ELOYALTY

Parameter Specifications

LAMBDA-Y

	ELOYALTY
EL1	0
EL2	1
EL3	2

PSI

	ELOYALTY
	3

THETA-EPS

EL1	EL2	EL3
4	5	6

UJI VALIDITAS ELOYALTY

Number of Iterations = 0

LISREL Estimates (Maximum Likelihood)

LAMBDA-Y

	ELOYALTY
EL1	0.77
EL2	0.68
	(0.07)
	10.02
EL3	0.78
	(0.08)
	9.76

Covariance Matrix of ETA

	ELOYALTY
	1.00

PSI

	ELOYALTY
	1.00
	(0.14)
	6.95

THETA-EPS

EL1	EL2	EL3
0.24	0.38	0.63
(0.05)	(0.05)	(0.07)
4.63	7.60	8.55

Squared Multiple Correlations for Y - Variables

EL1	EL2	EL3
0.71	0.55	0.49

Goodness of Fit Statistics

Degrees of Freedom = 0

Minimum Fit Function Chi-Square = 0.0 (P = 1.00)

Normal Theory Weighted Least Squares Chi-Square = 0.00 (P = 1.00)

The Model is Saturated, the Fit is Perfect !

UJI VALIDITAS ELOYALTY

Modification Indices and Expected Change

No Non-Zero Modification Indices for LAMBDA-Y

No Non-Zero Modification Indices for PSI

No Non-Zero Modification Indices for THETA-EPS

UJI VALIDITAS ELOYALTY

Factor Scores Regressions

ETA

	EL1	EL2	EL3
ELOYALTY	0.57	0.32	0.22

Time used: 0.016 Seconds

2. E-SATISFACTION

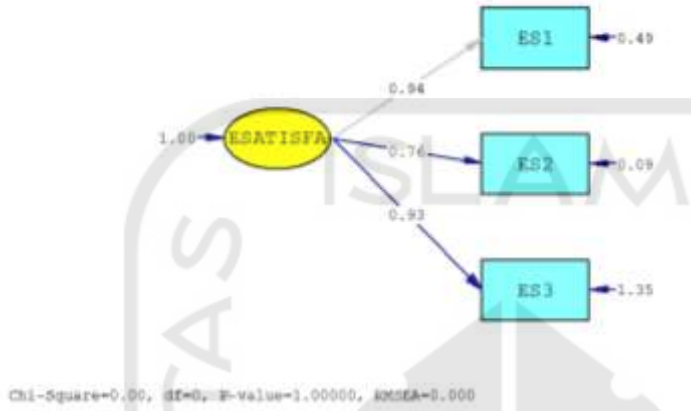

DATE: 12/28/2018
TIME: 10:35
L I S R E L 8.80
BY

Karl G. Jöreskog & Dag Sörbom
This program is published exclusively by
Scientific Software International, Inc.
7383 N. Lincoln Avenue, Suite 100
Lincolnwood, IL 60712, U.S.A.
Phone: (800)247-6113, (847)675-0720, Fax: (847)675-2140
Copyright by Scientific Software International, Inc., 1981-2006
Use of this program is subject to the terms specified in the
Universal Copyright Convention.
Website: www.ssicentral.com

The following lines were read from file E:\THESIS\1 ES\ES2.Spl:

UJI VALIDITAS ELOYALTY
DA NI=29 NO=255 MA=CM
LA
ES1 ES2 ES3 ES4
EL1 EL2 EL3 EL4
ET1 ET2 ET3
PDT1 PDT2 PDT3
WSD1 WSD2 WSD3 WSD4 WSD5
POS1 POS2 POS3 POS4 POS5
POP1 POP2 POP3 POP4 POP5

```
CM FI=URUTS.COV
 SE
 1 2 3 /
 MO NY=3 NE=1 LY=FU, FI TE=SY, FI
PS=DI
 LE
 ESATISFACTION
 FR LY 1 1 LY 2 1 LY 3 1
 FR TE 1 1 TE 2 2 TE 3 3

 PD
 OU MI FS

 UJI VALIDITAS ELOYALTY

                  Number of Input Variables 29
                  Number of Y - Variables    3
                  Number of X - Variables    0
                  Number of ETA - Variables
1
                  Number of KSI - Variables  0
                  Number of Observations
255

 UJI VALIDITAS ELOYALTY

      Covariance Matrix

           ES1       ES2       ES3
      --------  --------  --------
   ES1    1.38
   ES2    0.72      0.67
   ES3    0.88      0.71      2.21

 UJI VALIDITAS ELOYALTY
 Parameter Specifications

      LAMBDA-Y

        ESATISFA
        --------
   ES1         0
   ES2         1
   ES3         2

      PSI

        ESATISFA
        --------
            3

      THETA-EPS

           ES1       ES2       ES3
      --------  --------  --------
            4         5         6

 UJI VALIDITAS ELOYALTY

 Number of Iterations =  0

 LISREL Estimates (Maximum Likelihood)

      LAMBDA-Y

        ESATISFA
        --------
   ES1      0.94
   ES2      0.76
           (0.06)
            11.85
   ES3      0.93
           (0.09)
            10.20

      Covariance Matrix of ETA

        ESATISFA
        --------
            1.00

      PSI

        ESATISFA
        --------
            1.00
           (0.15)
            6.86

      THETA-EPS

           ES1       ES2       ES3
      --------  --------  --------
            0.49      0.09      1.35
           (0.07)    (0.04)    (0.13)
            6.54      2.24     10.11

      Squared Multiple Correlations for Y -
Variables

           ES1       ES2       ES3
      --------  --------  --------
            0.65      0.86      0.39

      Goodness of Fit Statistics
```

Degrees of Freedom = 0
Minimum Fit Function Chi-Square = 0.0 (P = 1.00)
Normal Theory Weighted Least Squares Chi-Square = 0.00 (P = 1.00)

The Model is Saturated, the Fit is Perfect !

UJI VALIDITAS ELOYALTY

Modification Indices and Expected Change

No Non-Zero Modification Indices for LAMBDA-Y

No Non-Zero Modification Indices for PSI

No Non-Zero Modification Indices for THETA-EPS

UJI VALIDITAS ELOYALTY

Factor Scores Regressions

ETA

	ES1	ES2	ES3
ESATISFA	0.20	0.85	0.07

Time used: 0.031 Seconds

3. E-TRUST

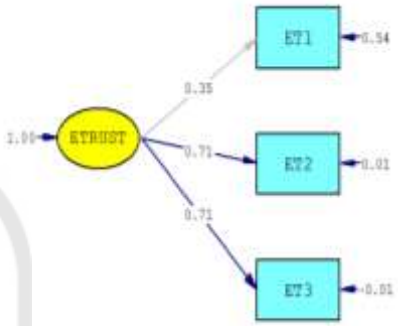

Chi-Square=0.00, df=0, P-value=1.00000, RMSEA=0.000

DATE: 1/19/2019
TIME: 15:19

L I S R E L 8.80

BY

Karl G. Jöreskog & Dag Sörbom

This program is published exclusively by
Scientific Software International, Inc.
7383 N. Lincoln Avenue, Suite 100
Lincolnwood, IL 60712, U.S.A.
Phone: (800)247-6113, (847)675-0720, Fax: (847)675-2140
Copyright by Scientific Software International, Inc., 1981-2006
Use of this program is subject to the terms specified in the
Universal Copyright Convention.
Website: www.ssicentral.com

The following lines were read from file E:\THESIS\3 ET\ET1.Spl:

```
UJI VALIDITAS ELOYALTY
DA NI=29 NO=255 MA=CM
LA
ES1 ES2 ES3 ES4
EL1 EL2 EL3 EL4
ET1 ET2 ET3
PDT1 PDT2 PDT3
WSD1 WSD2 WSD3 WSD4 WSD5
POS1 POS2 POS3 POS4 POS5
POP1 POP2 POP3 POP4 POP5
CM FI=URUTS.COV
SE
9 10 11 /
MO NY=3 NE=1 LY=FU, FI TE=SY, FI PS=DI
LE
ETRUST
FR LY 1 1 LY 2 1 LY 3 1
FR TE 1 1 TE 2 2 TE 3 3

PD
OU MI FS
```

UJI VALIDITAS ELOYALTY

```
Number of Input Variables 29
Number of Y - Variables    3
Number of X - Variables    0
Number of ETA - Variables 1
Number of KSI - Variables  0
Number of Observations 255
```

W_A_R_N_I_N_G: Matrix to be analyzed is not positive definite,
ridge option taken with ridge constant = 0.001

UJI VALIDITAS ELOYALTY

Covariance Matrix

	ET1	ET2	ET3
ET1	0.67		
ET2	0.25	0.51	
ET3	0.25	0.50	0.50

UJI VALIDITAS ELOYALTY

Parameter Specifications

LAMBDA-Y

	ETRUST
ET1	0
ET2	1
ET3	2

PSI

ETRUST
3

THETA-EPS

ET1	ET2	ET3
4	5	6

UJI VALIDITAS ELOYALTY

Number of Iterations = 0

LISREL Estimates (Maximum Likelihood)

LAMBDA-Y

	ETRUST
ET1	0.35
ET2	0.71
	(0.09)
	7.73
ET3	0.71
	(0.09)
	7.62

Covariance Matrix of ETA

ETRUST
1.00

PSI

	ETRUST
	1.00
	(0.28)
	3.63

THETA-EPS

ET1	ET2	ET3
0.54	0.01	-0.01
(0.05)	(0.00)	(0.00)
11.27	2.93	-2.59

Squared Multiple Correlations for Y - Variables

ET1	ET2	ET3
0.19	0.98	1.02

Goodness of Fit Statistics

Degrees of Freedom = 0

Minimum Fit Function Chi-Square = 0.00 (P = 1.00)

Normal Theory Weighted Least Squares Chi-Square = 0.00 (P = 1.00)

The Model is Saturated, the Fit is Perfect !

UJI VALIDITAS ELOYALTY

Modification Indices and Expected Change

No Non-Zero Modification Indices for LAMBDA-Y

No Non-Zero Modification Indices for PSI

No Non-Zero Modification Indices for THETA-EPS

UJI VALIDITAS ELOYALTY

Factor Scores Regressions

ETA

ET1	ET2	ET3

ETRUST	ETRUST	-0.10	-12.06	13.72

Time used: 0.031 Seconds

4. PERCEIVED DELIVERY TIME

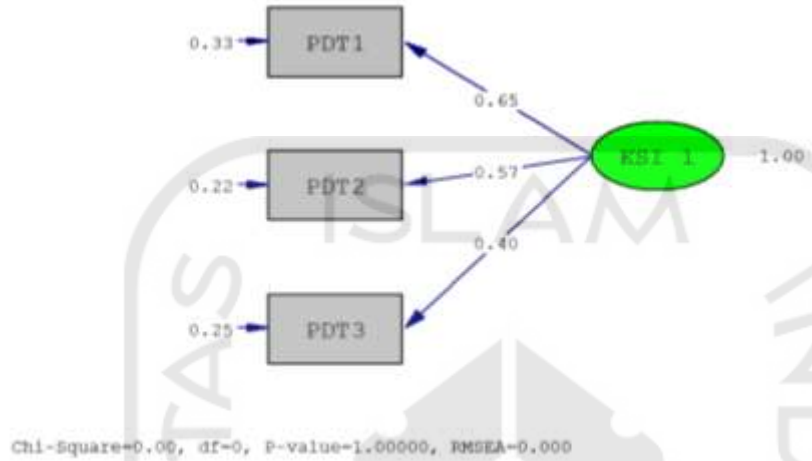

DATE: 12/28/2018
TIME: 11:06

L I S R E L 8.80

BY

Karl G. Jöreskog & Dag Sörbom

This program is published exclusively by
Scientific Software International, Inc.
7383 N. Lincoln Avenue, Suite 100
Lincolnwood, IL 60712, U.S.A.
Phone: (800)247-6113, (847)675-0720, Fax: (847)675-2140
Copyright by Scientific Software International, Inc., 1981-2006
Use of this program is subject to the terms specified in the
Universal Copyright Convention.
Website: www.ssicentral.com

The following lines were read from file E:\THESIS\4 PDT\PDT1.Spl:

```
DA NI=29 NO=255 MA=CM
LA
ES1 ES2 ES3 ES4
EL1 EL2 EL3 EL4
ET1 ET2 ET3
```

PDT1 PDT2 PDT3
WSD1 WSD2 WSD3 WSD4 WSD5
POS1 POS2 POS3 POS4 POS5
POP1 POP2 POP3 POP4 POP5
CM FI=URUTS.COV
SE
12 13 14 /
MO NX=3 NK=1 LX=FU, FI TD=DI, FI PH=DI, FR
LE
PDT
FR LX 1 1 LX 2 1 LX 3 1
FR TD 1 1 TD 2 2 TD 3 3

PD
OU MI FS

DA NI=29 NO=255 MA=CM

Number of Input Variables 29
Number of Y - Variables 0
Number of X - Variables 3
Number of ETA - Variables 0
Number of KSI - Variables 1
Number of Observations 255

DA NI=29 NO=255 MA=CM

Covariance Matrix

	PDT1	PDT2	PDT3
PDT1	0.75		
PDT2	0.37	0.55	
PDT3	0.26	0.23	0.41

DA NI=29 NO=255 MA=CM

Parameter Specifications

LAMBDA-X

	KSI 1
PDT1	1
PDT2	2
PDT3	3

THETA-DELTA

PDT1	PDT2	PDT3
4	5	6

DA NI=29 NO=255 MA=CM

Number of Iterations = 0

LISREL Estimates (Maximum Likelihood)

LAMBDA-X

	KSI 1
PDT1	0.65
	(0.06)
	11.34
PDT2	0.57
	(0.05)
	11.57
PDT3	0.40
	(0.04)
	9.53

PHI

KSI 1
1.00

THETA-DELTA

PDT1	PDT2	PDT3
0.33	0.22	0.25
(0.05)	(0.04)	(0.03)
6.09	5.63	9.02

Squared Multiple Correlations for X - Variables

PDT1	PDT2	PDT3
0.57	0.59	0.39

Goodness of Fit Statistics

Degrees of Freedom = 0
Minimum Fit Function Chi-Square = 0.00 (P = 1.00)
Normal Theory Weighted Least Squares Chi-Square = 0.00 (P = 1.00)

The Model is Saturated, the Fit is Perfect !

DA NI=29 NO=255 MA=CM

Modification Indices and Expected Change

No Non-Zero Modification Indices for LAMBDA-X

No Non-Zero Modification Indices for PHI

No Non-Zero Modification Indices for THETA-DELTA

DA NI=29 NO=255 MA=CM

Factor Scores Regressions

KSI

	PDT1	PDT2	PDT3
KSI 1	0.46	0.58	0.36

Time used: 0.031 Seconds

1. WEB SITE DESIGN

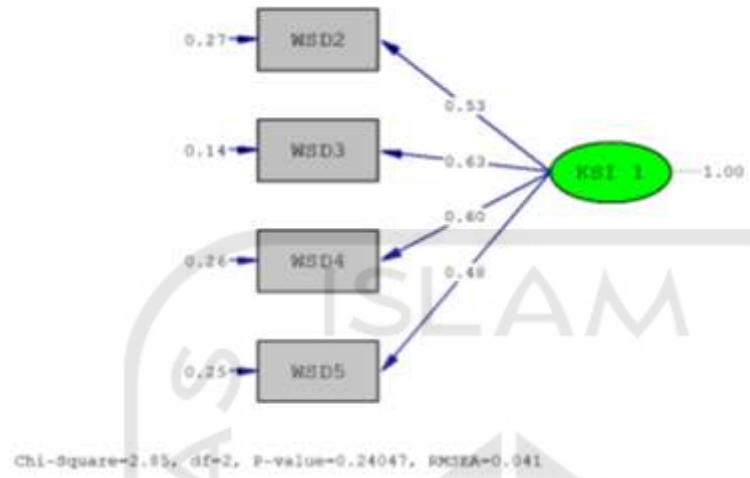

DATE: 12/28/2018
TIME: 11:10
L I S R E L 8.80
BY
Karl G. Jöreskog & Dag Sörbom

This program is published exclusively by
Scientific Software International, Inc.
7383 N. Lincoln Avenue, Suite 100
Lincolnwood, IL 60712, U.S.A.
Phone: (800)247-6113, (847)675-0720, Fax: (847)675-2140
Copyright by Scientific Software International, Inc., 1981-2006
Use of this program is subject to the terms specified in the
Universal Copyright Convention.
Website: www.ssicentral.com

The following lines were read from file E:\THESIS\5 WSD\WSD1.Spl:

```
DA NI=29 NO=255 MA=CM
LA
ES1 ES2 ES3 ES4
EL1 EL2 EL3 EL4
ET1 ET2 ET3
PDT1 PDT2 PDT3
WSD1 WSD2 WSD3 WSD4 WSD5
```

POS1 POS2 POS3 POS4 POS5
POP1 POP2 POP3 POP4 POP5
CM FI=URUTS.COV
SE
16 17 18 19 /
MO NX=4 NK=1 LX=FU, FI TD=DI, FI PH=DI, FR
LE
WSD
FR LX 1 1 LX 2 1 LX 3 1 LX 4 1
FR TD 1 1 TD 2 2 TD 3 3 TD 4 4

PD
OU MI FS

DA NI=29 NO=255 MA=CM

Number of Input Variables 29
Number of Y - Variables 0
Number of X - Variables 4
Number of ETA - Variables 0
Number of KSI - Variables 1
Number of Observations 255

DA NI=29 NO=255 MA=CM

Covariance Matrix

	WSD2	WSD3	WSD4	WSD5
WSD2	0.55			
WSD3	0.33	0.54		
WSD4	0.33	0.37	0.62	
WSD5	0.24	0.31	0.29	0.49

DA NI=29 NO=255 MA=CM

Parameter Specifications

LAMBDA-X

	KSI 1
WSD2	1
WSD3	2
WSD4	3
WSD5	4

THETA-DELTA

WSD2	WSD3	WSD4	WSD5
5	6	7	8

DA NI=29 NO=255 MA=CM

Number of Iterations = 4

LISREL Estimates (Maximum Likelihood)

LAMBDA-X

	KSI 1
WSD2	0.53
	(0.04)
	12.27
WSD3	0.63
	(0.04)
	15.69
WSD4	0.60
	(0.04)
	13.28
WSD5	0.48
	(0.04)
	11.79

PHI

	KSI 1
KSI 1	1.00

THETA-DELTA

WSD2	WSD3	WSD4	WSD5
0.27	0.14	0.26	0.25
(0.03)	(0.02)	(0.03)	(0.03)
9.21	5.79	8.52	9.46

Squared Multiple Correlations for X - Variables

WSD2	WSD3	WSD4	WSD5
0.51	0.74	0.58	0.48

Goodness of Fit Statistics

Degrees of Freedom = 2
Minimum Fit Function Chi-Square = 2.86 (P = 0.24)
Normal Theory Weighted Least Squares Chi-Square = 2.85 (P = 0.24)
Estimated Non-centrality Parameter (NCP) = 0.85
90 Percent Confidence Interval for NCP = (0.0 ; 9.67)

Minimum Fit Function Value = 0.011
Population Discrepancy Function Value (F0) = 0.0033
90 Percent Confidence Interval for F0 = (0.0 ; 0.038)
Root Mean Square Error of Approximation (RMSEA) = 0.041
90 Percent Confidence Interval for RMSEA = (0.0 ; 0.14)
P-Value for Test of Close Fit (RMSEA < 0.05) = 0.44

Expected Cross-Validation Index (ECVI) = 0.074
90 Percent Confidence Interval for ECVI = (0.071 ; 0.11)
ECVI for Saturated Model = 0.079
ECVI for Independence Model = 2.00

Chi-Square for Independence Model with 6 Degrees of Freedom = 500.57
Independence AIC = 508.57
Model AIC = 18.85
Saturated AIC = 20.00
Independence CAIC = 526.74
Model CAIC = 55.18
Saturated CAIC = 65.41

Normed Fit Index (NFI) = 0.99
Non-Normed Fit Index (NNFI) = 0.99
Parsimony Normed Fit Index (PNFI) = 0.33
Comparative Fit Index (CFI) = 1.00
Incremental Fit Index (IFI) = 1.00
Relative Fit Index (RFI) = 0.98

Critical N (CN) = 818.47

Root Mean Square Residual (RMR) = 0.0082
Standardized RMR = 0.015
Goodness of Fit Index (GFI) = 0.99
Adjusted Goodness of Fit Index (AGFI) = 0.97
Parsimony Goodness of Fit Index (PGFI) = 0.20

DA NI=29 NO=255 MA=CM

Modification Indices and Expected Change

No Non-Zero Modification Indices for LAMBDA-X

No Non-Zero Modification Indices for PHI

Modification Indices for THETA-DELTA

	WSD2	WSD3	WSD4	WSD5
WSD2	- -			
WSD3	0.00	- -		
WSD4	2.06	2.18	- -	
WSD5	2.18	2.06	0.00	- -

Expected Change for THETA-DELTA

	WSD2	WSD3	WSD4	WSD5
WSD2	- -			
WSD3	0.00	- -		
WSD4	0.04	-0.05	- -	
WSD5	-0.03	0.04	0.00	- -

Maximum Modification Index is 2.18 for Element (4, 1) of THETA-DELTA

DA NI=29 NO=255 MA=CM

Factor Scores Regressions

KSI

	WSD2	WSD3	WSD4	WSD5
KSI 1	0.28	0.63	0.32	0.27

Time used: 0.031 Seconds

2. PERCEIVED ONLINE SECURITY

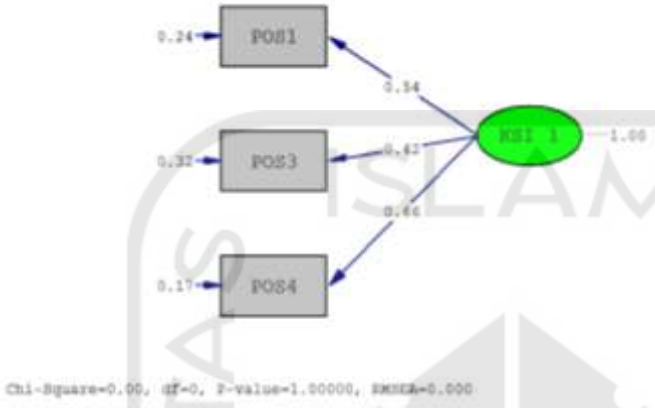

DATE: 12/28/2018
TIME: 11:32
L I S R E L 8.80
BY
Karl G. Jöreskog & Dag Sörbom
This program is published exclusively by
Scientific Software International, Inc.
7383 N. Lincoln Avenue, Suite 100
Lincolnwood, IL 60712, U.S.A.
Phone: (800)247-6113, (847)675-0720, Fax: (847)675-2140
Copyright by Scientific Software International, Inc., 1981-2006
Use of this program is subject to the terms specified in the
Universal Copyright Convention.
Website: www.ssicentral.com

The following lines were read from file E:\THESIS\6 POS\POS.Spl:

```
DA NI=29 NO=255 MA=CM
LA
ES1 ES2 ES3 ES4
EL1 EL2 EL3 EL4
ET1 ET2 ET3
PDT1 PDT2 PDT3
WSD1 WSD2 WSD3 WSD4 WSD5
POS1 POS2 POS3 POS4 POS5
POP1 POP2 POP3 POP4 POP5
CM FI=URUTS.COV
SE
20 22 23 /
```

MO NX=3 NK=1 LX=FU, FI TD=DI, FI PH=DI, FR
LE
POS
FR LX 1 1 LX 2 1 LX 3 1
FR TD 1 1 TD 2 2 TD 3 3

PD
OU MI FS

DA NI=29 NO=255 MA=CM

Number of Input Variables 29
Number of Y - Variables 0
Number of X - Variables 3
Number of ETA - Variables 0
Number of KSI - Variables 1
Number of Observations 255

DA NI=29 NO=255 MA=CM

Covariance Matrix

	POS1	POS3	POS4
POS1	0.54		
POS3	0.23	0.50	
POS4	0.36	0.28	0.61

DA NI=29 NO=255 MA=CM

Parameter Specifications

LAMBDA-X

	KSI 1
POS1	1
POS3	2
POS4	3

THETA-DELTA

POS1	POS3	POS4
4	5	6

DA NI=29 NO=255 MA=CM

Number of Iterations = 0

LISREL Estimates (Maximum Likelihood)

LAMBDA-X

	KSI 1
POS1	0.54
	(0.05)
	11.40
POS3	0.42
	(0.05)
	9.34
POS4	0.66
	(0.05)
	12.91

PHI

	KSI 1
	1.00

THETA-DELTA

POS1	POS3	POS4
0.24	0.32	0.17
(0.04)	(0.03)	(0.05)
6.69	9.54	3.77

Squared Multiple Correlations for X - Variables

POS1	POS3	POS4
0.55	0.36	0.72

Goodness of Fit Statistics

Degrees of Freedom = 0
Minimum Fit Function Chi-Square = 0.00 (P = 1.00)
Normal Theory Weighted Least Squares Chi-Square = 0.00 (P = 1.00)

The Model is Saturated, the Fit is Perfect !

DA NI=29 NO=255 MA=CM

Modification Indices and Expected Change

No Non-Zero Modification Indices for LAMBDA-X

No Non-Zero Modification Indices for PHI

No Non-Zero Modification Indices for THETA-DELTA

DA NI=29 NO=255 MA=CM

Factor Scores Regressions

KSI

	POS1	POS3	POS4
KSI 1	0.42	0.25	0.72

Time used: 0.016 Seconds

3. PERCEIVED ONLINE PRIVACY

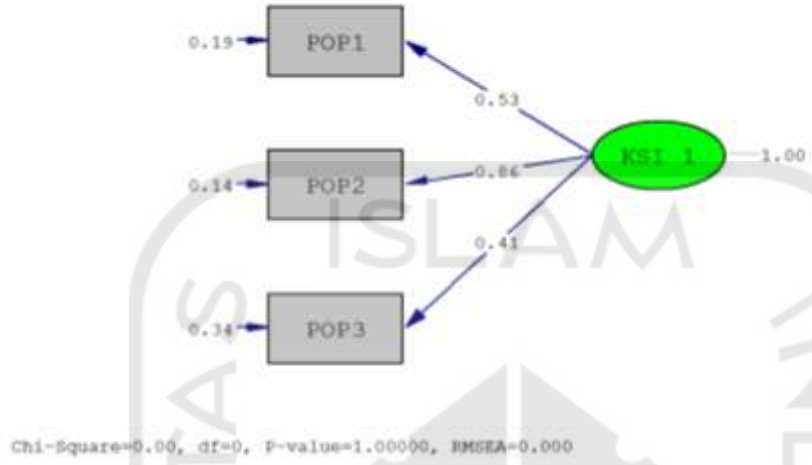

DATE: 12/28/2018
TIME: 11:41
L I S R E L 8.80
BY
Karl G. Jöreskog & Dag Sörbom
This program is published exclusively by
Scientific Software International, Inc.
7383 N. Lincoln Avenue, Suite 100
Lincolnwood, IL 60712, U.S.A.
Phone: (800)247-6113, (847)675-0720, Fax: (847)675-2140
Copyright by Scientific Software International, Inc., 1981-2006
Use of this program is subject to the terms specified in the
Universal Copyright Convention.
Website: www.ssicentral.com

The following lines were read from file E:\THESIS\7 POP\POP1.Spl:

```
DA NI=29 NO=255 MA=CM
LA
ES1 ES2 ES3 ES4
EL1 EL2 EL3 EL4
ET1 ET2 ET3
PDT1 PDT2 PDT3
WSD1 WSD2 WSD3 WSD4 WSD5
POS1 POS2 POS3 POS4 POS5
POP1 POP2 POP3 POP4 POP5
CM FI=URUTS.COV
```

SE
25 26 27 /
MO NX=3 NK=1 LX=FU, FI TD=DI, FI PH=DI, FR
LE
POP
FR LX 1 1 LX 2 1 LX 3 1
FR TD 1 1 TD 2 2 TD 3 3

PD
OU MI FS

DA NI=29 NO=255 MA=CM

Number of Input Variables 29
Number of Y - Variables 0
Number of X - Variables 3
Number of ETA - Variables 0
Number of KSI - Variables 1
Number of Observations 255

DA NI=29 NO=255 MA=CM

Covariance Matrix

	POP1	POP2	POP3
POP1	0.47		
POP2	0.46	0.89	
POP3	0.22	0.35	0.51

DA NI=29 NO=255 MA=CM

Parameter Specifications

LAMBDA-X

	KSI 1
POP1	1
POP2	2
POP3	3

THETA-DELTA

POP1	POP2	POP3
4	5	6

DA NI=29 NO=255 MA=CM

Number of Iterations = 0

LISREL Estimates (Maximum Likelihood)

LAMBDA-X

	KSI 1
POP1	0.53
	(0.04)
	12.42
POP2	0.86
	(0.06)
	14.73
POP3	0.41
	(0.04)
	9.08

PHI

	KSI 1
	1.00

THETA-DELTA

POP1	POP2	POP3
0.19	0.14	0.34
(0.03)	(0.07)	(0.03)
6.33	2.15	10.21

Squared Multiple Correlations for X - Variables

POP1	POP2	POP3
0.60	0.84	0.32

Goodness of Fit Statistics

Degrees of Freedom = 0
Minimum Fit Function Chi-Square = 0.0 (P = 1.00)
Normal Theory Weighted Least Squares Chi-Square = 0.00 (P = 1.00)

The Model is Saturated, the Fit is Perfect !

DA NI=29 NO=255 MA=CM

Modification Indices and Expected Change

No Non-Zero Modification Indices for LAMBDA-X

No Non-Zero Modification Indices for PHI

No Non-Zero Modification Indices for THETA-DELTA

DA NI=29 NO=255 MA=CM

Factor Scores Regressions

KSI

	POP1	POP2	POP3
KSI 1	0.34	0.74	0.14

Time used: 0.016 Seconds

UNIVERSITAS ISLAM INDONESIA

APPENDIX F

PRELIMINARY STRUCTURAL EQUATION MODEL FULL

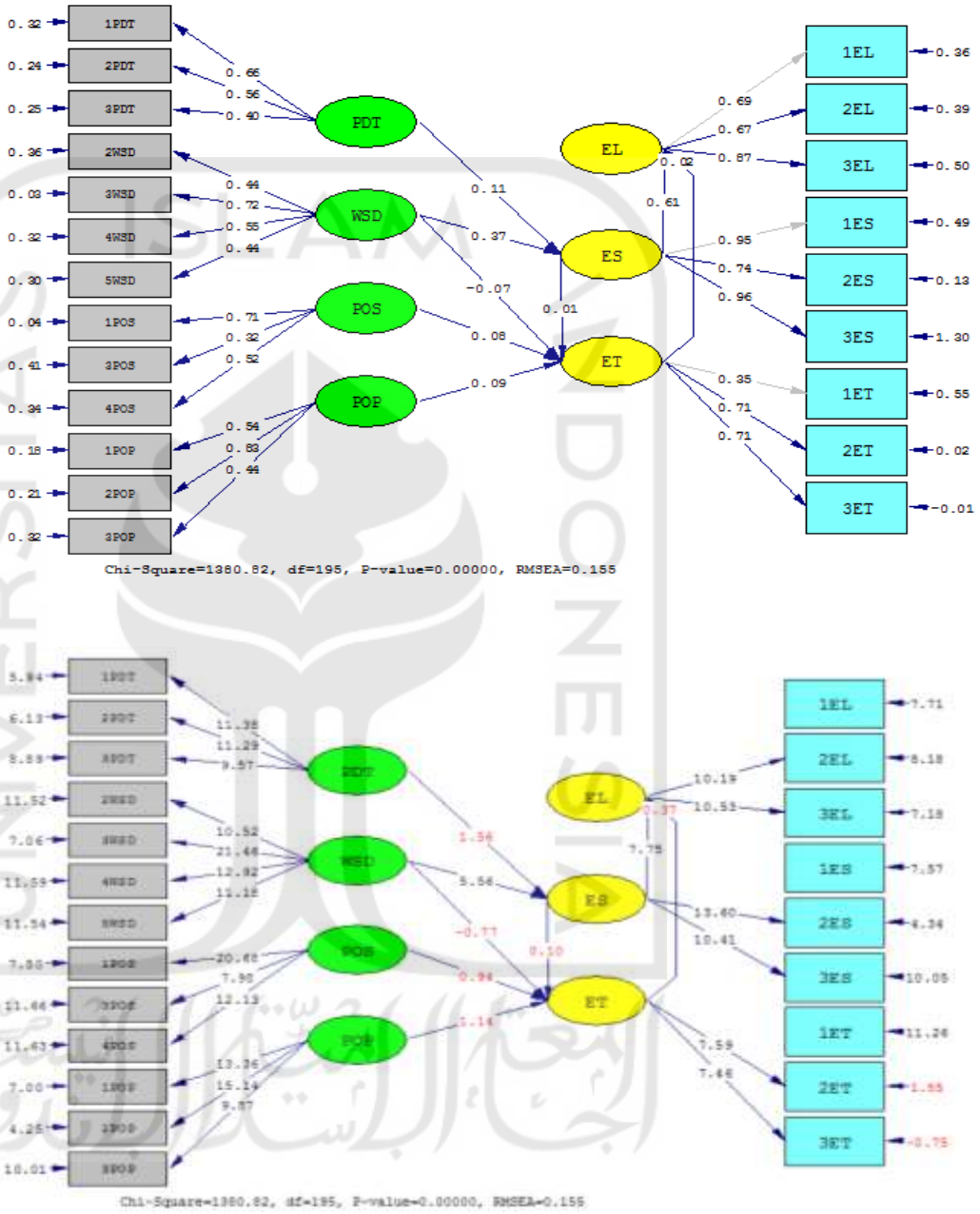

DATE: 1/ 7/2019
TIME: 6:57

L I S R E L 8.80
BY

Karl G. Jöreskog & Dag Sörbom

This program is published exclusively by
Scientific Software International, Inc.
7383 N. Lincoln Avenue, Suite 100
Lincolnwood, IL 60712, U.S.A.
Phone: (800)247-6113, (847)675-0720, Fax: (847)675-2140
Copyright by Scientific Software International, Inc., 1981-2006
Use of this program is subject to the terms specified in the
Universal Copyright Convention.
Website: www.ssicentral.com

The following lines were read from file D:\shifa\255\FULLMODEL.LS8:

```
TI Coba 2
DA NI=23 NO=255 MA=CM
LA
1EL 2EL 3EL 1ES 2ES 3ES 1ET 2ET 3ET 1PDT
2PDT 3PDT 2WSD 3WSD 4WSD 5WSD 1POS 3POS 4POS
5POS 1POP 2POP 3POP
CM FI='D:\shifa\255\data.cov' SY
SE
1 2 3 4 5 6 7 8 9 10 11 12 13 14 15 16 17
18 19 21 22 23/
MO NX=13 NY=9 NK=4 NE=3 BE=FU GA=FI PS=DI,FR PH=SY TE=SY TD=SY
LE
EL ES ET
LK
PDT WSD POS POP
FR LY(1,1) LY(2,1) LY(3,1) LY(4,2) LY(5,2) LY(6,2) LY(7,3) LY(8,3) LY(9,3)
FR LX(1,1) LX(2,1) LX(3,1) LX(4,2) LX(5,2) LX(6,2) LX(7,2) LX(8,3)
FR LX(9,3) LX(10,3) LX(11,4) LX(12,4) LX(13,4) BE(1,2) BE(1,3) BE(3,2) GA(2,1)
FR GA(2,2) GA(3,2) GA(3,3) GA(3,4) TE(1,1) TE(2,2) TE(3,3) TE(4,4) TE(5,5)
FR TE(6,6) TE(7,7) TE(8,8) TE(9,9) TD(1,1) TD(2,2) TD(3,3) TD(4,4) TD(5,5)
FR TD(6,6) TD(7,7) TD(8,8) TD(9,9) TD(10,10) TD(11,11) TD(12,12) TD(13,13)
PD
OU MI AD=OFF
```

TI Coba 2

Number of Input Variables 23
Number of Y - Variables 9
Number of X - Variables 13
Number of ETA - Variables 3
Number of KSI - Variables 4
Number of Observations 255

W_A_R_N_I_N_G: Matrix to be analyzed is not positive definite,
ridge option taken with ridge constant = 0.010

TI Coba 2

Covariance Matrix

	1EL	2EL	3EL	1ES	2ES	3ES
1EL	0.84					
2EL	0.52	0.84				
3EL	0.60	0.53	1.25			
1ES	0.32	0.25	0.60	1.40		
2ES	0.18	0.30	0.47	0.72	0.67	
3ES	0.35	0.57	0.73	0.88	0.71	2.23
1ET	0.02	0.05	-0.11	-0.01	-0.01	-0.07
2ET	0.05	0.01	0.02	0.02	0.01	0.01
3ET	0.05	0.02	0.02	0.05	0.02	0.02
1PDT	0.18	0.17	0.05	0.05	0.04	0.08
2PDT	0.05	0.07	0.03	0.09	0.01	-0.12
3PDT	0.05	0.05	0.05	0.15	0.09	0.07
2WSD	0.28	0.32	0.32	0.14	0.17	0.35
3WSD	0.29	0.34	0.38	0.19	0.20	0.28
4WSD	0.34	0.32	0.33	0.26	0.22	0.47
5WSD	0.25	0.25	0.34	0.34	0.23	0.29
1POS	0.29	0.33	0.38	0.19	0.19	0.28
3POS	0.25	0.32	0.27	0.17	0.17	0.28
4POS	0.33	0.31	0.35	0.27	0.22	0.46
1POP	0.24	0.22	0.31	0.11	0.17	0.32
2POP	0.32	0.37	0.35	0.20	0.27	0.47
3POP	0.25	0.32	0.27	0.16	0.18	0.28

Covariance Matrix

	1ET	2ET	3ET	1PDT	2PDT	3PDT
1ET	0.67					
2ET	0.25	0.52				
3ET	0.25	0.50	0.50			
1PDT	0.09	0.01	0.03	0.76		
2PDT	0.03	-0.02	-0.01	0.37	0.56	
3PDT	0.01	-0.04	-0.02	0.26	0.23	0.41
2WSD	0.01	-0.01	0.01	0.05	0.01	0.00
3WSD	0.03	0.04	0.04	0.02	0.01	-0.01
4WSD	0.04	0.01	0.02	0.07	0.02	0.01
5WSD	0.03	0.03	0.02	0.05	0.06	0.05
1POS	0.03	0.04	0.03	0.02	0.02	-0.01
3POS	0.08	0.05	0.05	0.10	0.02	0.01
4POS	0.02	0.00	0.00	0.07	0.03	0.01
1POP	0.03	0.03	0.03	0.07	-0.04	0.02
2POP	0.07	0.03	0.05	0.10	-0.06	0.00
3POP	0.09	0.05	0.05	0.10	0.02	0.01

Covariance Matrix

	2WSD	3WSD	4WSD	5WSD	1POS	3POS
2WSD	0.55					

3WSD	0.33	0.54				
4WSD	0.33	0.37	0.62			
5WSD	0.24	0.31	0.29	0.49		
1POS	0.33	0.54	0.36	0.32	0.54	
3POS	0.23	0.24	0.28	0.21	0.23	0.51
4POS	0.32	0.36	0.61	0.29	0.36	0.28
1POP	0.20	0.16	0.23	0.19	0.16	0.22
2POP	0.27	0.25	0.34	0.21	0.25	0.35
3POP	0.23	0.24	0.28	0.21	0.24	0.51

Covariance Matrix

	4POS	1POP	2POP	3POP
4POS	0.61			
1POP	0.23	0.48		
2POP	0.34	0.46	0.90	
3POP	0.28	0.22	0.35	0.51

TI Coba 2

Parameter Specifications

LAMBDA-Y

	EL	ES	ET
1EL	0	0	0
2EL	1	0	0
3EL	2	0	0
1ES	0	0	0
2ES	0	3	0
3ES	0	4	0
1ET	0	0	0
2ET	0	0	5
3ET	0	0	6

LAMBDA-X

	PDT	WSD	POS	POP
1PDT	7	0	0	0
2PDT	8	0	0	0
3PDT	9	0	0	0
2WSD	0	10	0	0
3WSD	0	11	0	0
4WSD	0	12	0	0
5WSD	0	13	0	0
1POS	0	0	14	0
3POS	0	0	15	0
4POS	0	0	16	0
1POP	0	0	0	17
2POP	0	0	0	18
3POP	0	0	0	19

BETA

	EL	ES	ET
EL	0	20	21
ES	0	0	0
ET	0	22	0

GAMMA

	PDT	WSD	POS	POP
EL	0	0	0	0
ES	23	24	0	0
ET	0	25	26	27

PHI

	PDT	WSD	POS	POP
PDT	0			
WSD	28	0		
POS	29	30	0	
POP	31	32	33	0

PSI

EL	ES	ET
34	35	36

THETA-EPS

1EL	2EL	3EL	1ES	2ES	3ES
37	38	39	40	41	42

THETA-EPS

1ET	2ET	3ET
43	44	45

THETA-DELTA

1PDT	2PDT	3PDT	2WSD	3WSD	4WSD
46	47	48	49	50	51

THETA-DELTA

5WSD	1POS	3POS	4POS	1POP	2POP
52	53	54	55	56	57

THETA-DELTA

3POP

58

TI Coba 2

Number of Iterations = 58

LISREL Estimates (Maximum Likelihood)

LAMBDA-Y

	EL	ES	ET
1EL	0.69	- -	- -
2EL	0.67	- -	- -
	(0.07)		
	10.19		
3EL	0.87	- -	- -
	(0.08)		
	10.53		
1ES	- -	0.95	- -
2ES	- -	0.74	- -
		(0.05)	
		13.60	
3ES	- -	0.96	- -
		(0.09)	
		10.41	
1ET	- -	- -	0.35
2ET	- -	- -	0.71
			(0.09)
			7.59
3ET	- -	- -	0.71
			(0.10)
			7.46

LAMBDA-X

	PDT	WSD	POS	POP
1PDT	0.66	- -	- -	- -
	(0.06)			
	11.38			
2PDT	0.56	- -	- -	- -
	(0.05)			
	11.29			
3PDT	0.40	- -	- -	- -
	(0.04)			
	9.57			
2WSD	- -	0.44	- -	- -
		(0.04)		
		10.52		
3WSD	- -	0.72	- -	- -
		(0.03)		
		21.46		
4WSD	- -	0.55	- -	- -

	(0.04)			
	12.92			
5WSD	- -	0.44	- -	- -
	(0.04)			
	11.18			
1POS	- -	- -	0.71	- -
		(0.03)		
		20.68		
3POS	- -	- -	0.32	- -
		(0.04)		
		7.98		
4POS	- -	- -	0.52	- -
		(0.04)		
		12.13		
1POP	- -	- -	- -	0.54
			(0.04)	
			13.36	
2POP	- -	- -	- -	0.83
			(0.05)	
			15.14	
3POP	- -	- -	- -	0.44
			(0.04)	
			9.87	

BETA

	EL	ES	ET
EL	- -	0.61	0.02
		(0.08)	(0.06)
		7.75	0.37
ES	- -	- -	- -
ET	- -	0.01	- -
		(0.07)	
		0.10	

GAMMA

	PDT	WSD	POS	POP
EL	- -	- -	- -	- -
ES	0.11	0.37	- -	- -
	(0.07)	(0.07)		
	1.56	5.56		
ET	- -	-0.07	0.08	0.09
		(0.10)	(0.09)	(0.08)
		-0.77	0.94	1.14

Covariance Matrix of ETA and KSI

	EL	ES	ET	PDT	WSD	POS
EL	1.00					
ES	0.61	1.00				
ET	0.04	0.03	1.00			
PDT	0.08	0.13	0.01	1.00		

WSD	0.23	0.37	0.06	0.04	1.00	
POS	0.24	0.39	0.05	0.04	1.05	1.00
POP	0.12	0.19	0.10	0.05	0.50	0.51

Covariance Matrix of ETA and KSI

	POP
POP	1.00

PHI

	PDT	WSD	POS	POP
PDT	1.00			
WSD	0.04	1.00		
	(0.07)			
	0.53			
POS	0.04	1.05	1.00	
	(0.07)	(0.01)		
	0.52	131.79		
POP	0.05	0.50	0.51	1.00
	(0.08)	(0.05)	(0.06)	
	0.70	9.03	9.13	

PSI

Note: This matrix is diagonal.

EL	ES	ET
0.63	0.85	0.99
(0.11)	(0.12)	(0.28)
5.72	7.14	3.58

Squared Multiple Correlations for Structural Equations

EL	ES	ET
0.37	0.15	0.01

Squared Multiple Correlations for Reduced Form

EL	ES	ET
0.06	0.15	0.01

Reduced Form

	PDT	WSD	POS	POP
EL	0.07	0.22	0.00	0.00
	(0.04)	(0.05)	(0.01)	(0.01)
	1.54	4.74	0.34	0.35
ES	0.11	0.37	- -	- -
	(0.07)	(0.07)		
	1.56	5.56		

ET	0.00	-0.07	0.08	0.09
	(0.01)	(0.10)	(0.09)	(0.08)
	0.10	-0.75	0.94	1.14

THETA-EPS

1EL	2EL	3EL	1ES	2ES	3ES
0.36	0.39	0.50	0.49	0.13	1.30
(0.05)	(0.05)	(0.07)	(0.07)	(0.03)	(0.13)
7.71	8.18	7.18	7.57	4.34	10.05

THETA-EPS

1ET	2ET	3ET
0.55	0.02	-0.01
(0.05)	(0.01)	(0.01)
11.26	1.85	-0.75

Squared Multiple Correlations for Y - Variables

1EL	2EL	3EL	1ES	2ES	3ES
0.57	0.53	0.60	0.65	0.80	0.42

Squared Multiple Correlations for Y - Variables

1ET	2ET	3ET
0.18	0.97	1.01

THETA-DELTA

1PDT	2PDT	3PDT	2WSD	3WSD	4WSD
0.32	0.24	0.25	0.36	0.03	0.32
(0.05)	(0.04)	(0.03)	(0.03)	(0.00)	(0.03)
5.94	6.13	8.89	11.52	7.06	11.59

THETA-DELTA

5WSD	1POS	3POS	4POS	1POP	2POP
0.30	0.04	0.41	0.34	0.18	0.21
(0.03)	(0.01)	(0.03)	(0.03)	(0.03)	(0.05)
11.54	7.50	11.66	11.63	7.00	4.25

THETA-DELTA

3POP
0.32
(0.03)
10.01

Squared Multiple Correlations for X - Variables

1PDT	2PDT	3PDT	2WSD	3WSD	4WSD
0.57	0.56	0.39	0.35	0.95	0.49

Squared Multiple Correlations for X - Variables

5WSD	1POS	3POS	4POS	1POP	2POP
0.39	0.92	0.20	0.44	0.62	0.76

Squared Multiple Correlations for X - Variables

3POP
0.37

Goodness of Fit Statistics

Degrees of Freedom = 195
Minimum Fit Function Chi-Square = 2640.92 (P = 0.0)
Normal Theory Weighted Least Squares Chi-Square = 1380.82 (P = 0.0)
Estimated Non-centrality Parameter (NCP) = 1185.82
90 Percent Confidence Interval for NCP = (1071.66 ; 1307.44)

Minimum Fit Function Value = 10.40
Population Discrepancy Function Value (F0) = 4.67
90 Percent Confidence Interval for F0 = (4.22 ; 5.15)
Root Mean Square Error of Approximation (RMSEA) = 0.15
90 Percent Confidence Interval for RMSEA = (0.15 ; 0.16)
P-Value for Test of Close Fit (RMSEA < 0.05) = 0.00

Expected Cross-Validation Index (ECVI) = 5.89
90 Percent Confidence Interval for ECVI = (5.44 ; 6.37)
ECVI for Saturated Model = 1.99
ECVI for Independence Model = 27.26

Chi-Square for Independence Model with 231 Degrees of Freedom = 6878.86
Independence AIC = 6922.86
Model AIC = 1496.82
Saturated AIC = 506.00
Independence CAIC = 7022.76
Model CAIC = 1760.22
Saturated CAIC = 1654.94

Normed Fit Index (NFI) = 0.62
Non-Normed Fit Index (NNFI) = 0.56
Parsimony Normed Fit Index (PNFI) = 0.52
Comparative Fit Index (CFI) = 0.63
Incremental Fit Index (IFI) = 0.63
Relative Fit Index (RFI) = 0.55

Critical N (CN) = 24.45
Root Mean Square Residual (RMR) = 0.11

Standardized RMR = 0.15
Goodness of Fit Index (GFI) = 0.67
Adjusted Goodness of Fit Index (AGFI) = 0.57
Parsimony Goodness of Fit Index (PGFI) = 0.52

TI Coba 2

Modification Indices and Expected Change

Modification Indices for LAMBDA-Y

	EL	ES	ET
1EL	- -	25.25	1.24
2EL	- -	0.06	0.21
3EL	- -	26.89	0.42
1ES	3.41	- -	2.61
2ES	8.28	- -	0.89
3ES	5.59	- -	0.09
1ET	0.60	0.61	- -
2ET	0.07	4.66	- -
3ET	0.07	4.84	- -

Expected Change for LAMBDA-Y

	EL	ES	ET
1EL	- -	-0.38	0.05
2EL	- -	-0.02	-0.02
3EL	- -	0.49	-0.04
1ES	-0.17	- -	0.08
2ES	-0.19	- -	-0.03
3ES	0.28	- -	-0.02
1ET	-0.04	-0.04	- -
2ET	0.00	-0.01	- -
3ET	0.00	0.01	- -

Modification Indices for LAMBDA-X

	PDT	WSD	POS	POP
1PDT	- -	0.14	0.59	10.34
2PDT	- -	0.29	0.48	11.33
3PDT	- -	1.27	0.13	0.18
2WSD	0.41	- -	12.30	16.47
3WSD	6.29	- -	95.04	64.96
4WSD	1.90	- -	7.32	24.67
5WSD	4.79	- -	1.21	7.56
1POS	3.97	50.49	- -	81.20
3POS	2.65	2.42	- -	72.99
4POS	1.72	0.07	- -	26.72
1POP	0.00	3.04	0.02	- -
2POP	0.83	6.13	3.02	- -
3POP	2.28	31.97	7.09	- -

Expected Change for LAMBDA-X

	PDT	WSD	POS	POP
1PDT	- -	0.02	0.03	0.16
2PDT	- -	0.02	-0.02	-0.15
3PDT	- -	-0.04	-0.01	-0.02
2WSD	0.03	- -	0.21	0.20
3WSD	-0.09	- -	-3.02	-0.33
4WSD	0.06	- -	-0.18	0.23
5WSD	0.09	- -	0.06	0.12
1POS	-0.10	-6.32	- -	-0.52
3POS	0.08	0.11	- -	0.43
4POS	0.06	-0.03	- -	0.25
1POP	0.00	-0.07	0.00	- -
2POP	-0.05	-0.15	-0.09	- -
3POP	0.07	0.25	0.10	- -

Modification Indices for BETA

	EL	ES	ET
EL	- -	- -	- -
ES	56.13	- -	8.63
ET	29.14	- -	- -

Expected Change for BETA

	EL	ES	ET
EL	- -	- -	- -
ES	-1.73	- -	1.21
ET	-4.89	- -	- -

Modification Indices for GAMMA

	PDT	WSD	POS	POP
EL	3.10	53.06	42.48	40.81
ES	- -	- -	7.23	19.04
ET	0.04	- -	- -	- -

Expected Change for GAMMA

	PDT	WSD	POS	POP
EL	0.12	0.47	0.38	0.43
ES	- -	- -	0.24	0.35
ET	0.01	- -	- -	- -

No Non-Zero Modification Indices for PHI

Modification Indices for PSI

	EL	ES	ET
EL	- -		

ES	56.68	- -	
ET	29.14	0.04	- -

Expected Change for PSI

	EL	ES	ET
EL	- -		
ES	-1.09	- -	
ET	-3.07	-0.11	- -

Modification Indices for THETA-EPS

	1EL	2EL	3EL	1ES	2ES	3ES
1EL	- -					
2EL	26.43	- -				
3EL	0.07	24.52	- -			
1ES	3.75	28.05	1.80	- -		
2ES	29.36	2.03	2.80	27.15	- -	
3ES	1.16	9.18	0.30	1.55	0.16	- -
1ET	0.57	5.77	10.87	0.23	0.02	1.02
2ET	0.01	0.06	1.86	40.57	6.21	0.22
3ET	0.02	0.26	1.45	42.24	6.68	0.22

Modification Indices for THETA-EPS

	1ET	2ET	3ET
1ET	- -		
2ET	2.08	- -	
3ET	2.03	0.01	- -

Expected Change for THETA-EPS

	1EL	2EL	3EL	1ES	2ES	3ES
1EL	- -					
2EL	0.27	- -				
3EL	-0.02	-0.33	- -			
1ES	0.07	-0.19	0.06	- -		
2ES	-0.13	0.03	0.05	0.38	- -	
3ES	-0.06	0.16	0.03	-0.10	-0.03	- -
1ET	0.02	0.08	-0.13	-0.02	0.00	-0.06
2ET	0.00	0.00	0.01	-0.03	0.01	0.00
3ET	0.00	0.00	-0.01	0.03	-0.01	0.00

Expected Change for THETA-EPS

	1ET	2ET	3ET
1ET	- -		
2ET	0.03	- -	
3ET	-0.03	-0.07	- -

Modification Indices for THETA-DELTA-EPS

	1EL	2EL	3EL	1ES	2ES	3ES
1PDT	12.50	4.62	6.44	5.89	0.55	4.08
2PDT	0.75	0.05	0.26	6.24	2.33	11.96
3PDT	1.30	0.87	0.22	1.89	3.10	0.04
2WSD	1.09	4.85	0.09	3.59	0.19	6.74
3WSD	0.79	0.89	0.01	0.55	2.72	0.11
4WSD	6.30	0.16	3.06	0.15	0.06	12.98
5WSD	0.08	0.31	1.26	11.91	0.79	0.56
1POS	0.14	0.82	0.35	0.04	3.54	0.98
3POS	1.13	9.02	0.95	0.85	0.04	0.71
4POS	5.71	0.17	0.41	0.76	2.64	8.27
1POP	0.93	5.20	7.62	2.91	0.64	1.43
2POP	0.06	2.42	2.85	0.48	2.66	1.40
3POP	0.26	11.23	0.65	0.06	0.48	0.06

Modification Indices for THETA-DELTA-EPS

	1ET	2ET	3ET
1PDT	2.52	0.50	0.49
2PDT	0.02	0.06	0.06
3PDT	0.02	3.77	3.06
2WSD	0.84	35.55	33.81
3WSD	4.40	0.32	0.16
4WSD	0.01	6.19	5.57
5WSD	0.00	0.30	0.32
1POS	3.64	1.72	2.04
3POS	4.70	1.19	1.06
4POS	1.31	2.96	2.20
1POP	0.17	18.99	19.03
2POP	0.03	38.45	36.90
3POP	2.69	0.24	0.18

Expected Change for THETA-DELTA-EPS

	1EL	2EL	3EL	1ES	2ES	3ES
1PDT	0.11	0.07	-0.09	-0.08	-0.02	0.10
2PDT	-0.02	0.01	0.02	0.07	-0.03	-0.15
3PDT	-0.03	-0.02	0.01	0.04	0.03	-0.01
2WSD	0.03	0.06	-0.01	-0.06	0.01	0.11
3WSD	0.00	0.00	0.00	0.00	0.01	0.00
4WSD	0.06	0.01	-0.05	0.01	0.00	0.15
5WSD	-0.01	-0.01	0.03	0.09	0.02	-0.03
1POS	0.00	0.00	0.00	0.00	-0.01	-0.01
3POS	0.03	0.08	-0.03	-0.03	0.00	0.04
4POS	0.06	-0.01	-0.02	0.02	-0.03	0.11
1POP	0.02	-0.05	0.07	-0.04	0.01	0.04
2POP	-0.01	0.04	-0.06	-0.02	0.03	0.06
3POP	0.01	0.09	-0.03	-0.01	-0.01	-0.01

Expected Change for THETA-DELTA-EPS

	1ET	2ET	3ET

1PDT	0.05	0.00	0.00
2PDT	0.00	0.00	0.00
3PDT	0.00	-0.01	0.01
2WSD	-0.03	-0.02	0.02
3WSD	-0.01	0.00	0.00
4WSD	0.00	-0.01	0.01
5WSD	0.00	0.00	0.00
1POS	0.01	0.00	0.00
3POS	0.06	0.00	0.00
4POS	0.03	-0.01	0.00
1POP	-0.01	0.01	-0.01
2POP	0.01	-0.03	0.02
3POP	0.05	0.00	0.00

Modification Indices for THETA-DELTA

	1PDT	2PDT	3PDT	2WSD	3WSD	4WSD
1PDT	- -					
2PDT	8.06	- -				
3PDT	9.20	0.79	- -			
2WSD	0.85	0.61	0.00	- -		
3WSD	0.07	1.69	0.30	5.11	- -	
4WSD	2.37	1.61	0.18	16.90	19.44	- -
5WSD	0.28	0.23	2.82	4.91	0.01	5.91
1POS	1.06	4.00	0.97	19.16	452.04	0.90
3POS	5.62	0.67	0.70	3.45	14.82	16.69
4POS	0.64	0.04	0.17	3.72	55.55	257.10
1POP	0.96	3.73	0.93	3.97	0.36	3.93
2POP	1.30	3.96	0.04	0.54	0.01	3.57
3POP	0.93	1.02	0.76	0.60	9.47	0.54

Modification Indices for THETA-DELTA

	5WSD	1POS	3POS	4POS	1POP	2POP
5WSD	- -					
1POS	3.24	- -				
3POS	2.99	0.25	- -			
4POS	4.24	1.72	23.14	- -		
1POP	10.45	3.30	1.15	0.72	- -	
2POP	1.39	0.68	0.01	2.24	28.67	- -
3POP	0.53	4.56	167.31	7.47	6.24	2.43

Modification Indices for THETA-DELTA

	3POP
3POP	- -

Expected Change for THETA-DELTA

	1PDT	2PDT	3PDT	2WSD	3WSD	4WSD
1PDT	- -					

2PDT	0.73	- -				
3PDT	-0.46	0.11	- -			
2WSD	0.02	-0.02	0.00	- -		
3WSD	0.00	-0.01	0.00	0.01	- -	
4WSD	0.04	-0.03	0.01	0.09	-0.02	- -
5WSD	-0.01	0.01	0.03	0.05	0.00	0.05
1POS	-0.01	0.01	0.00	-0.02	0.34	-0.01
3POS	0.06	-0.02	-0.02	0.04	-0.02	0.09
4POS	0.02	0.00	-0.01	0.04	-0.07	0.33
1POP	0.02	-0.04	0.02	0.04	0.00	0.03
2POP	0.03	-0.05	0.00	0.02	0.00	0.04
3POP	0.02	0.02	-0.02	0.02	-0.01	0.02

Expected Change for THETA-DELTA

	5WSD	1POS	3POS	4POS	1POP	2POP
5WSD	- -					
1POS	-0.01	- -				
3POS	0.04	0.00	- -			

APPENDIX G

FINAL *ONE-CONGENERIC* STRUCTURAL EQUATION MODEL FULL (BEFORE MODIFICATION)

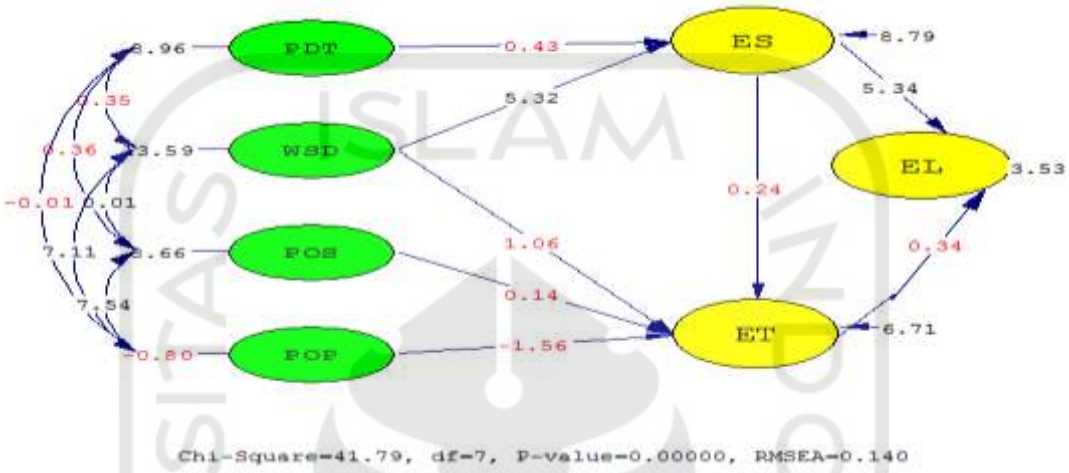

DATE: 1/18/2019
TIME: 20:20
L I S R E L 8.80
BY
Karl G. Jöreskog & Dag Sörbom
This program is published exclusively by
Scientific Software International, Inc.
7383 N. Lincoln Avenue, Suite 100
Lincolnwood, IL 60712, U.S.A.
Phone: (800)247-6113, (847)675-0720, Fax: (847)675-2140
Copyright by Scientific Software International, Inc., 1981-2006
Use of this program is subject to the terms specified in the
Universal Copyright Convention.
Website: www.ssicentral.com

The following lines were read from file E:\THESIS\ONECON\ONECON.lpj:

```
TI MODEL GABUNGAN FIX
DA NI=7 NO=255 MA=CM
LA
EL ES ET PDT WSD POS POP
PM='E:\THESIS\ONECON\ONE.PMM'
AC='E:\THESIS\ONECON\ONE.ACM'
SE
```

1 2 3 4 5 6 7/
MO NX=4 NY=3 NK=4 NE=3 LX=FU,FI LY=FU,FI GA=FU,FI BE=FU,FI PH=SY,FR TD=SY,FI PS=DI,FR TE=SY,FI
LK
PDT WSD POS POP
LE
EL ES ET
FR GA 2 1 GA 2 2 GA 3 2 GA 3 3 GA 3 4
FR BE 1 2 BE 3 2 BE 1 3
VA .871 LX 1 1
VA .239 TD 1 1
VA .927 LX 2 2
VA .139 TD 2 2
VA .887 LX 3 3
VA .212 TD 3 3
VA .810 LX 4 4
VA .937 TD 4 4
VA .121 LY 1 1
VA .907 TE 1 1
VA .947 LY 2 2
VA .101 TE 2 2
VA .810 LY 3 3
VA .342 TE 3 3
PD
OU MI EF

TI MODEL GABUNGAN FIX

Number of Input Variables 7
Number of Y - Variables 3
Number of X - Variables 4
Number of ETA - Variables 3
Number of KSI - Variables 4
Number of Observations 255

TI MODEL GABUNGAN FIX

Covariance Matrix

	EL	ES	ET	PDT	WSD	POS
EL	2.21					
ES	0.82	1.51				
ET	0.05	0.04	0.72			
PDT	0.12	0.04	0.04	0.55		
WSD	0.61	0.37	-0.02	0.01	0.55	
POS	0.51	0.32	-0.01	0.01	0.45	0.46
POP	0.60	0.49	0.09	0.01	0.30	0.30

Covariance Matrix

	POP
POP	0.89

TI MODEL GABUNGAN FIX

Parameter Specifications

BETA

	EL	ES	ET
EL	0	1	2
ES	0	0	0
ET	0	3	0

GAMMA

	PDT	WSD	POS	POP
EL	0	0	0	0
ES	4	5	0	0
ET	0	6	7	8

PHI

	PDT	WSD	POS	POP
PDT	9			
WSD	10	11		
POS	12	13	14	
POP	15	16	17	18

PSI

	EL	ES	ET
	19	20	21

TI MODEL GABUNGAN FIX

Number of Iterations = 12

LISREL Estimates (Robust Maximum Likelihood)

LAMBDA-Y

	EL	ES	ET
EL	0.12	- -	- -
ES	- -	0.95	- -
ET	- -	- -	0.81

LAMBDA-X

	PDT	WSD	POS	POP
PDT	0.87	- -	- -	- -
WSD	- -	0.93	- -	- -
POS	- -	- -	0.89	- -
POP	- -	- -	- -	0.81

BETA

	EL	ES	ET
EL	- -	4.63	0.57
		(0.87)	(1.66)
		5.34	0.34
ES	- -	- -	- -
ET	- -	0.02	- -
		(0.09)	
		0.24	

GAMMA

	PDT	WSD	POS	POP
EL	- -	- -	- -	- -
ES	0.09	0.74	- -	- -
	(0.22)	(0.14)		
	0.43	5.32		
ET	- -	0.24	0.03	-0.36
		(0.23)	(0.19)	(0.23)
		1.06	0.14	-1.56

Covariance Matrix of ETA and KSI

	EL	ES	ET	PDT	WSD	POS
EL	88.68					
ES	7.29	1.57				
ET	0.41	0.02	0.58			
PDT	0.23	0.05	0.01	0.40		
WSD	1.67	0.36	-0.02	0.02	0.49	
POS	1.88	0.41	0.00	0.02	0.55	0.32
POP	1.57	0.32	0.15	0.00	0.43	0.42

Covariance Matrix of ETA and KSI

	POP
POP	-0.07

PHI

	PDT	WSD	POS	POP
PDT	0.40			
	(0.05)			
	8.96			
WSD	0.02	0.49		
	(0.05)	(0.04)		
	0.35	13.59		
POS	0.02	0.55	0.32	
	(0.04)	(0.01)	(0.04)	
	0.36	40.01	8.66	
POP	0.00	0.43	0.42	-0.07
	(0.06)	(0.06)	(0.06)	(0.09)
	-0.01	7.11	7.54	-0.80

W_A_R_N_I_N_G: PHI is not positive definite

PSI

Note: This matrix is diagonal.

EL	ES	ET
54.65	1.30	0.63
(15.49)	(0.15)	(0.09)
3.53	8.79	6.71

Squared Multiple Correlations for Structural Equations

EL	ES	ET
0.38	0.17	-0.10

Squared Multiple Correlations for Reduced Form

EL	ES	ET

0.07 0.17 -0.10

Reduced Form

	PDT	WSD	POS	POP
EL	0.43	3.59	0.02	-0.20
	(1.01)	(1.23)	(0.12)	(0.60)
	0.43	2.92	0.12	-0.34
ES	0.09	0.74	- -	- -
	(0.22)	(0.14)		
	0.43	5.32		
ET	0.00	0.26	0.03	-0.36
	(0.01)	(0.23)	(0.19)	(0.23)
	0.21	1.11	0.14	-1.56

THETA-EPS

EL	ES	ET
0.91	0.10	0.34

Squared Multiple Correlations for Y - Variables

EL	ES	ET
0.59	0.93	0.53

THETA-DELTA

PDT	WSD	POS	POP
0.24	0.14	0.21	0.94

Squared Multiple Correlations for X - Variables

PDT	WSD	POS	POP
0.56	0.75	0.54	-0.05

Goodness of Fit Statistics

Degrees of Freedom = 7

Minimum Fit Function Chi-Square = 97.06 (P = 0.0)

Normal Theory Weighted Least Squares Chi-Square = 78.19 (P = 0.00)

Satorra-Bentler Scaled Chi-Square = 41.79 (P = 0.00)

Chi-Square Corrected for Non-Normality = 74.17 (P = 0.00)

Estimated Non-centrality Parameter (NCP) = 34.79

90 Percent Confidence Interval for NCP = (18.06 ; 59.02)

Minimum Fit Function Value = 0.38

Population Discrepancy Function Value (F0) = 0.14

90 Percent Confidence Interval for F0 = (0.071 ; 0.23)

Root Mean Square Error of Approximation (RMSEA) = 0.14

90 Percent Confidence Interval for RMSEA = (0.10 ; 0.18)

P-Value for Test of Close Fit (RMSEA < 0.05) = 0.00017

Expected Cross-Validation Index (ECVI) = 0.33

90 Percent Confidence Interval for ECVI = (0.26 ; 0.43)

ECVI for Saturated Model = 0.22

ECVI for Independence Model = 2.74

Chi-Square for Independence Model with 21 Degrees of Freedom = 681.22

Independence AIC = 695.22

Model AIC = 83.79

Saturated AIC = 56.00

Independence CAIC = 727.01

Model CAIC = 179.16

Saturated CAIC = 183.16

Normed Fit Index (NFI) = 0.94

Non-Normed Fit Index (NNFI) = 0.84

Parsimony Normed Fit Index (PNFI) = 0.31

Comparative Fit Index (CFI) = 0.95

Incremental Fit Index (IFI) = 0.95

Relative Fit Index (RFI) = 0.82

Critical N (CN) = 113.29

Root Mean Square Residual (RMR) = 0.14

Standardized RMR = 0.12

Goodness of Fit Index (GFI) = 0.92

Adjusted Goodness of Fit Index (AGFI) = 0.67

Parsimony Goodness of Fit Index (PGFI) = 0.23

TI MODEL GABUNGAN FIX

Modification Indices and Expected Change

Modification Indices for LAMBDA-Y

	EL	ES	ET
EL	- -	- -	- -
ES	12.87	- -	- -
ET	- -	- -	- -

Expected Change for LAMBDA-Y

	EL	ES	ET
EL	- -	- -	- -
ES	-0.07	- -	- -
ET	- -	- -	- -

No Non-Zero Modification Indices for LAMBDA-X

Modification Indices for BETA

	EL	ES	ET
EL	- -	- -	- -
ES	5.17	- -	- -
ET	- -	- -	- -

Expected Change for BETA

	EL	ES	ET
EL	- -	- -	- -
ES	-0.03	- -	- -
ET	- -	- -	- -

Modification Indices for GAMMA

	PDT	WSD	POS	POP
EL	2.73	58.49	39.14	25.94
ES	- -	- -	- -	- -
ET	0.99	- -	- -	- -

Expected Change for GAMMA

	PDT	WSD	POS	POP
EL	2.39	9.97	6.70	6.24
ES	- -	- -	- -	- -
ET	0.17	- -	- -	- -

No Non-Zero Modification Indices for PHI

No Non-Zero Modification Indices for PSI

Modification Indices for THETA-EPS

Note: This matrix is diagonal.

EL	ES	ET
- -	- -	0.00

Expected Change for THETA-EPS

Note: This matrix is diagonal.

EL	ES	ET
- -	- -	0.00

Modification Indices for THETA-DELTA-EPS

	EL	ES	ET
PDT	2.51	- -	0.80
WSD	7.39	- -	- -
POS	0.24	- -	- -
POP	1.85	11.65	- -

Expected Change for THETA-DELTA-EPS

	EL	ES	ET
PDT	0.10	- -	0.04
WSD	0.08	- -	- -
POS	0.01	- -	- -
POP	0.09	0.20	- -

Modification Indices for THETA-DELTA

Note: This matrix is diagonal.

PDT	WSD	POS	POP

0.00	- -	- -	- -

Expected Change for THETA-DELTA
Note: This matrix is diagonal.

PDT	WSD	POS	POP
0.00	- -	- -	- -

Maximum Modification Index is 58.49 for Element (1, 2) of GAMMA

TI MODEL GABUNGAN FIX

Total and Indirect Effects

Total Effects of KSI on ETA

	PDT	WSD	POS	POP
EL	0.43	**3.59**	0.02	-0.20
	(1.01)	(1.23)	(0.12)	(0.60)
	0.43	2.92	0.12	-0.34
ES	**0.090.74**	- -	- -	
	(0.22)	(0.14)		
	0.43	5.32		
ET	0.00	0.26	0.03	-0.36
	(0.01)	(0.23)	(0.19)	(0.23)
	0.21	1.11	0.14	-1.56

Indirect Effects of KSI on ETA

	PDT	WSD	POS	POP
EL	0.43	3.59	0.02	-0.20
	(1.01)	(1.23)	(0.12)	(0.60)
	0.43	2.92	0.12	-0.34
ES	- -	- -	- -	- -
ET	0.00	0.02	- -	- -
	(0.01)	(0.07)		
	0.21	0.24		

Total Effects of ETA on ETA

	EL	ES	ET
EL	- -	**4.650.57**	
		(0.88)	(1.66)
		5.30	0.34
ES	- -	- -	- -
ET	- -	**0.02**	- -
		(0.09)	
		0.24	

Largest Eigenvalue of B*B' (Stability Index) is 21.793

Indirect Effects of ETA on ETA

	EL	ES	ET
EL	- -	0.01	- -
		(0.05)	
		0.23	
ES	- -	- -	- -
ET	- -	- -	- -

Total Effects of ETA on Y

	EL	ES	ET
EL	0.12	0.56	0.07
	(0.11)	(0.20)	
	5.30	0.34	
ES	- -	0.95	- -
ET	- -	0.02	0.81
		(0.07)	
		0.24	

Indirect Effects of ETA on Y

	EL	ES	ET
EL	- -	0.56	0.07
		(0.11)	(0.20)
		5.30	0.34
ES	- -	- -	- -
ET	- -	0.02	- -
		(0.07)	
		0.24	

Total Effects of KSI on Y

	PDT	WSD	POS	POP
EL	0.05	0.43	0.00	-0.02
	(0.12)	(0.15)	(0.02)	(0.07)
	0.43	2.92	0.12	-0.34
ES	0.09	0.70	- -	- -
	(0.20)	(0.13)		
	0.43	5.32		
ET	0.00	0.21	0.02	-0.29
	(0.01)	(0.19)	(0.16)	(0.19)
	0.21	1.11	0.14	-1.56

Time used: 0.016 Seconds

UNIVERSITAS ISLAM INDONESIA

APPENDIX H

FINAL *ONE-CONGENERIC* STRUCTURAL EQUATION MODEL FULL (AFTER MODIFICATION)

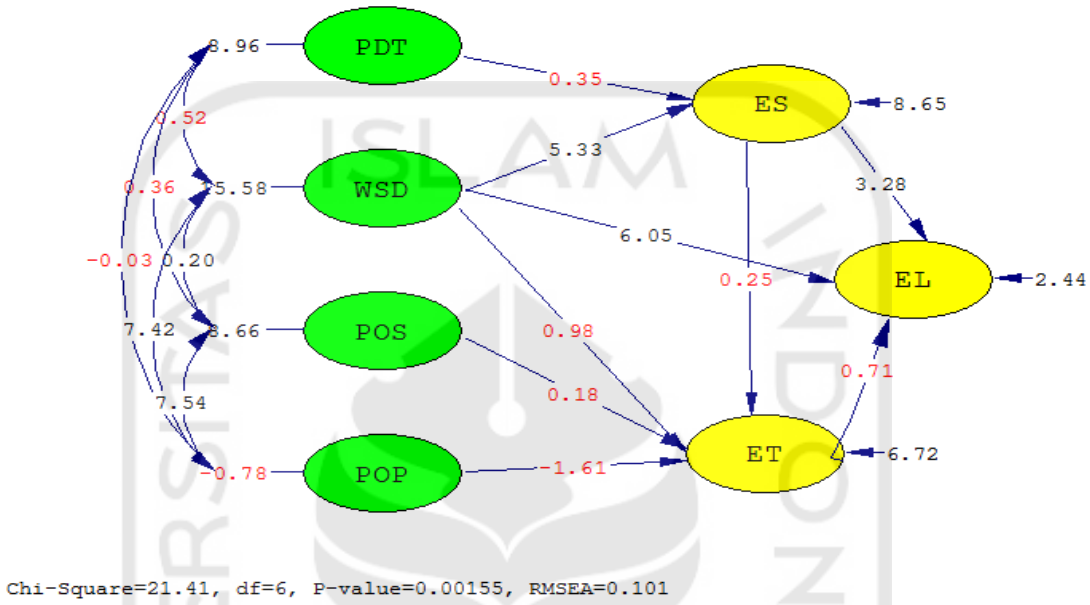

DATE: 2/ 6/2019
TIME: 9:18
L I S R E L 8.80
BY
Karl G. Jöreskog & Dag Sörbom
This program is published exclusively by
Scientific Software International, Inc.
7383 N. Lincoln Avenue, Suite 100
Lincolnwood, IL 60712, U.S.A.
Phone: (800)247-6113, (847)675-0720, Fax: (847)675-2140
Copyright by Scientific Software International, Inc., 1981-2006
Use of this program is subject to the terms specified in the
Universal Copyright Convention.
Website: www.ssicentral.com

The following lines were read from file E:\THESIS\ONECON\ONECON1.LS8:

```
TI MODEL GABUNGAN FIX
DA NI=7 NO=255 MA=CM
LA
EL ES ET PDT WSD POS POP
PM='E:\THESIS\ONECON\ONE.PMM'
AC='E:\THESIS\ONECON\ONE.ACM'
SE
 1 2 3 4 5 6 7/
 MO NX=4 NY=3 NK=4 NE=3 LX=FU,FI
LY=FU,FI GA=FU,FI BE=FU,FI PH=SY,FR
TD=SY,FI PS=DI,FR TE=SY,FI
 LK
 PDT WSD POS POP
 LE
 EL ES ET
```

FR GA 2 1 GA 2 2 GA 3 2 GA 3 3 GA 3 4 GA 1 2
FR BE 1 2 BE 3 2 BE 1 3
VA .871 LX 1 1
VA .239 TD 1 1
VA .927 LX 2 2
VA .139 TD 2 2
VA .887 LX 3 3
VA .212 TD 3 3
VA .810 LX 4 4
VA .937 TD 4 4
VA .121 LY 1 1
VA .907 TE 1 1
VA .947 LY 2 2
VA .101 TE 2 2
VA .810 LY 3 3
VA .342 TE 3 3
PD
OU MI EF

TI MODEL GABUNGAN FIX

Number of Input Variables 7
Number of Y - Variables 3
Number of X - Variables 4
Number of ETA - Variables 3
Number of KSI - Variables 4
Number of Observations 255

TI MODEL GABUNGAN FIX

Covariance Matrix

	EL	ES	ET	PDT	WSD	POS
EL	2.21					
ES	0.82	1.51				
ET	0.05	0.04	0.72			
PDT	0.12	0.04	0.04	0.55		
WSD	0.61	0.37	-0.02	0.01	0.55	
POS	0.51	0.32	-0.01	0.01	0.45	0.46
POP	0.60	0.49	0.09	0.01	0.30	0.30

Covariance Matrix

	POP
POP	0.89

TI MODEL GABUNGAN FIX

Parameter Specifications

BETA

	EL	ES	ET
EL	0	1	2
ES	0	0	0
ET	0	3	0

GAMMA

	PDT	WSD	POS	POP
EL	0	4	0	0
ES	5	6	0	0
ET	0	7	8	9

PHI

	PDT	WSD	POS	POP
PDT	10			
WSD	11	12		
POS	13	14	15	
POP	16	17	18	19

PSI

	EL	ES	ET
	20	21	22

TI MODEL GABUNGAN FIX

Number of Iterations = 15

LISREL Estimates (Robust Maximum Likelihood)

LAMBDA-Y

	EL	ES	ET
EL	0.12	- -	- -
ES	- -	0.95	- -
ET	- -	- -	0.81

LAMBDA-X

	PDT	WSD	POS	POP
PDT	0.87	- -	- -	- -
WSD	- -	0.93	- -	- -
POS	- -	- -	0.89	- -
POP	- -	- -	- -	0.81

BETA

	EL	ES	ET
EL	- -	2.86	1.05
		(0.87)	(1.49)
		3.28	0.71
ES	- -	- -	- -
ET	- -	0.02	- -
		(0.09)	
		0.25	

GAMMA

	PDT	WSD	POS	POP
EL	- -	6.93	- -	- -
		(1.15)		
		6.05		
ES	0.08	0.74	- -	- -
	(0.22)	(0.14)		
	0.35	5.33		
ET	- -	0.23	0.04	-0.36
		(0.23)	(0.20)	(0.23)
		0.98	0.18	-1.61

Covariance Matrix of ETA and KSI

	EL	ES	ET	PDT	WSD	POS
EL	88.63					
ES	7.10	1.57				
ET	0.50	0.01	0.58			
PDT	0.33	0.05	0.01	0.40		
WSD	4.51	0.37	-0.02	0.03	0.50	
POS	4.91	0.41	-0.01	0.02	0.54	0.32
POP	4.18	0.33	0.15	0.00	0.44	0.42

Covariance Matrix of ETA and KSI

	POP
POP	-0.07

PHI

	PDT	WSD	POS	POP
PDT	0.40			
	(0.05)			
	8.96			
WSD	0.03	0.50		
	(0.05)	(0.03)		
	0.52	15.58		
POS	0.02	0.54	0.32	
	(0.04)	(0.01)	(0.04)	
	0.36	40.20	8.66	
POP	0.00	0.44	0.42	-0.07
	(0.06)	(0.06)	(0.06)	(0.09)
	-0.03	7.42	7.54	-0.78

W_A_R_N_I_N_G: PHI is not positive definite

PSI

Note: This matrix is diagonal.

EL	ES	ET
36.59	1.29	0.63
(14.98)	(0.15)	(0.09)
2.44	8.65	6.72

Squared Multiple Correlations for Structural Equations

EL	ES	ET
0.59	0.18	-0.10

Squared Multiple Correlations for Reduced Form

EL	ES	ET
0.46	0.18	-0.10

Reduced Form

	PDT	WSD	POS	POP
EL	0.22	9.31	0.04	-0.38
	(0.64)	(1.19)	(0.21)	(0.61)
	0.34	7.79	0.17	-0.63
ES	0.08	0.74	- -	- -

(0.22) (0.14)
0.35 5.33

ET 0.00 0.24 0.04 -0.36
(0.01) (0.24) (0.20) (0.23)
0.20 1.03 0.18 -1.61

THETA-EPS

EL	ES	ET
0.91	0.10	0.34

Squared Multiple Correlations for Y - Variables

EL	ES	ET
0.59	0.93	0.53

THETA-DELTA

PDT	WSD	POS	POP
0.24	0.14	0.21	0.94

Squared Multiple Correlations for X - Variables

PDT	WSD	POS	POP
0.56	0.76	0.54	-0.05

Goodness of Fit Statistics

Degrees of Freedom = 6
Minimum Fit Function Chi-Square = 53.56 (P = 0.00)
Normal Theory Weighted Least Squares Chi-Square = 43.07 (P = 0.00)
Satorra-Bentler Scaled Chi-Square = 21.41 (P = 0.0015)
Chi-Square Corrected for Non-Normality = 24.96 (P = 0.00035)
Estimated Non-centrality Parameter (NCP) = 15.41
90 Percent Confidence Interval for NCP = (4.90 ; 33.49)

Minimum Fit Function Value = 0.21
Population Discrepancy Function Value (F0) = 0.061
90 Percent Confidence Interval for F0 = (0.019 ; 0.13)
Root Mean Square Error of Approximation (RMSEA) = 0.10
90 Percent Confidence Interval for RMSEA = (0.057 ; 0.15)
P-Value for Test of Close Fit (RMSEA < 0.05) = 0.031

Expected Cross-Validation Index (ECVI) = 0.26
90 Percent Confidence Interval for ECVI = (0.22 ; 0.33)
ECVI for Saturated Model = 0.22
ECVI for Independence Model = 2.74

Chi-Square for Independence Model with 21 Degrees of Freedom = 681.22
Independence AIC = 695.22
Model AIC = 65.41
Saturated AIC = 56.00
Independence CAIC = 727.01
Model CAIC = 165.32
Saturated CAIC = 183.16

Normed Fit Index (NFI) = 0.97
Non-Normed Fit Index (NNFI) = 0.92
Parsimony Normed Fit Index (PNFI) = 0.28
Comparative Fit Index (CFI) = 0.98
Incremental Fit Index (IFI) = 0.98
Relative Fit Index (RFI) = 0.89

Critical N (CN) = 200.41

Root Mean Square Residual (RMR) = 0.065
Standardized RMR = 0.055
Goodness of Fit Index (GFI) = 0.95
Adjusted Goodness of Fit Index (AGFI) = 0.77
Parsimony Goodness of Fit Index (PGFI) = 0.20

TI MODEL GABUNGAN FIX

Modification Indices and Expected Change

Modification Indices for LAMBDA-Y

	EL	ES	ET
EL	- -	- -	- -
ES	0.02	- -	- -
ET	- -	- -	- -

Expected Change for LAMBDA-Y

	EL	ES	ET
EL	- -	- -	- -
ES	0.00	- -	- -
ET	- -	- -	- -

No Non-Zero Modification Indices for LAMBDA-X

Modification Indices for BETA

	EL	ES	ET
EL	- -	- -	- -
ES	0.01	- -	- -
ET	- -	- -	- -

Expected Change for BETA

	EL	ES	ET
EL	- -	- -	- -
ES	0.00	- -	- -
ET	- -	- -	- -

Modification Indices for GAMMA

	PDT	WSD	POS	POP
EL	3.44	- -	- -	0.15
ES	- -	- -	- -	- -
ET	1.00	- -	- -	- -

Expected Change for GAMMA

	PDT	WSD	POS	POP
EL	2.79	- -	- -	-0.52
ES	- -	- -	- -	- -
ET	0.17	- -	- -	- -

No Non-Zero Modification Indices for PHI

No Non-Zero Modification Indices for PSI

Modification Indices for THETA-EPS
Note: This matrix is diagonal.

EL	ES	ET
- -	- -	0.00

Expected Change for THETA-EPS
Note: This matrix is diagonal.

EL	ES	ET
- -	- -	0.01

Modification Indices for THETA-DELTA-EPS

	EL	ES	ET
PDT	2.91	- -	0.64
WSD	- -	0.45	- -
POS	- -	- -	- -
POP	3.07	12.40	- -

Expected Change for THETA-DELTA-EPS

	EL	ES	ET
PDT	0.11	- -	0.04
WSD	- -	0.03	- -
POS	- -	- -	- -
POP	0.13	0.21	- -

Modification Indices for THETA-DELTA
Note: This matrix is diagonal.

PDT	WSD	POS	POP
0.00	- -	- -	- -

Expected Change for THETA-DELTA
Note: This matrix is diagonal.

PDT	WSD	POS	POP
0.00	- -	- -	- -

Maximum Modification Index is 12.40 for Element (4, 2) of THETA DELTA-EPSILON

TI MODEL GABUNGAN FIX

Total and Indirect Effects

Total Effects of KSI on ETA

	PDT	WSD	POS	POP
EL	0.22	9.31	0.04	-0.38
	(0.64)	(1.19)	(0.21)	(0.61)
	0.34	7.79	0.17	-0.63
ES	0.08	0.74	- -	- -
	(0.22)	(0.14)		
	0.35	5.33		
ET	0.00	0.24	0.04	-0.36
	(0.01)	(0.24)	(0.20)	(0.23)
	0.20	1.03	0.18	-1.61

Indirect Effects of KSI on ETA

	PDT	WSD	POS	POP
EL	0.22	2.38	0.04	-0.38
	(0.64)	(0.93)	(0.21)	(0.61)
	0.34	2.56	0.17	-0.63
ES	- -	- -	- -	- -
ET	0.00	0.02	- -	- -
	(0.01)	(0.07)		
	0.20	0.25		

Total Effects of ETA on ETA

	EL	ES	ET
EL	- -	2.88	1.05
		(0.88)	(1.49)
		3.28	0.71
ES	- -	- -	- -
ET	- -	0.02	- -
		(0.09)	
		0.25	

Largest Eigenvalue of B*B' (Stability Index) is 9.260

Indirect Effects of ETA on ETA

	EL	ES	ET
EL	- -	0.02	- -
		(0.10)	
		0.23	
ES	- -	- -	- -
ET	- -	- -	- -

Total Effects of ETA on Y

	EL	ES	ET
EL	0.12	0.35	0.13
		(0.11)	(0.18)
		3.28	0.71
ES	- -	0.95	- -
ET	- -	0.02	0.81
		(0.07)	
		0.25	

Indirect Effects of ETA on Y

	EL	ES	ET
EL	- -	0.35	0.13
		(0.11)	(0.18)
		3.28	0.71
ES	- -	- -	- -
ET	- -	0.02	- -
		(0.07)	
		0.25	

Total Effects of KSI on Y

	PDT	WSD	POS	POP
EL	0.03	1.13	0.00	-0.05
	(0.08)	(0.14)	(0.03)	(0.07)
	0.34	7.79	0.17	-0.63
ES	0.07	0.70	- -	- -
	(0.21)	(0.13)		
	0.35	5.33		
ET	0.00	0.20	0.03	-0.29
	(0.01)	(0.19)	(0.16)	(0.18)
	0.20	1.03	0.18	-1.61

Time used: 0.031 Seconds

UNIVERSITAS ISLAM INDONESIA