LAMPIRAN 7

GAMBAR TEKNIK PENAMPANG MELINTANG HASIL PERENCANAAN PENENDALIAN BANJIR SUNGAI CIRASEA P47 – P9

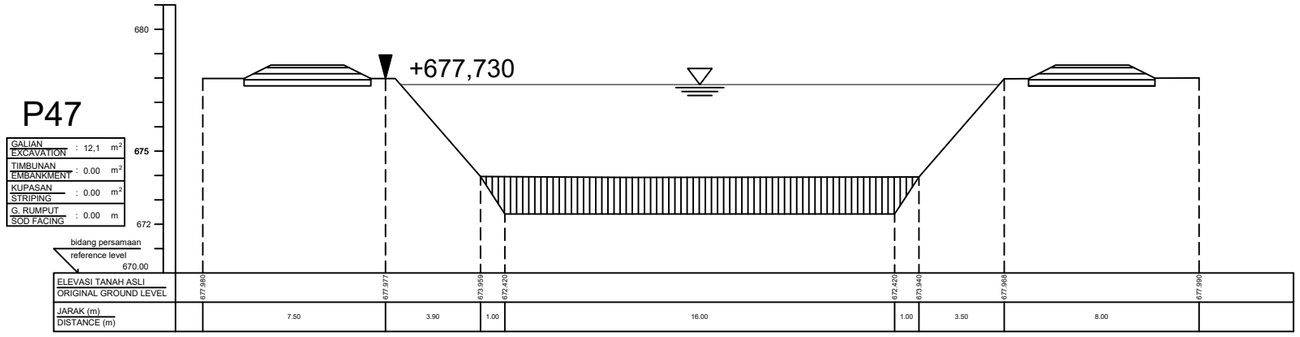
P47
GALIAN EXCAVATION : 12,1 m²
TIMBUNAN EMBANKMENT : 0.00 m²
KUPASAN STRIPING : 0.00 m²
G. RUMPUT SOD FACING : 0.00 m
680
675
672
+677,730
bidang persamaan
reference level
670.00
ELEVASI TANAH ASLI
ORIGINAL GROUND LEVEL
677.980
677.977
673.959
672.420
672.420
673.940
677.968
677.990
JARAK (m)
DISTANCE (m)
7.50
3.90
1.00
16.00
1.00
3.50
8.00

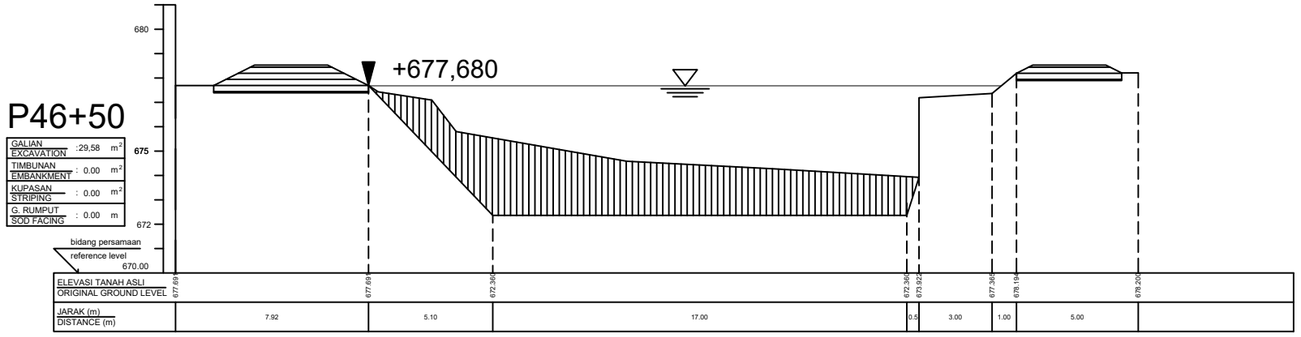
P46+50
GALIAN EXCAVATION :29,58 m²
TIMBUNAN EMBANKMENT : 0.00 m²
KUPASAN STRIPING : 0.00 m²
G. RUMPUT SOD FACING : 0.00 m
680
675
672
+677,680
bidang persamaan
reference level
670.00
ELEVASI TANAH ASLI
ORIGINAL GROUND LEVEL
677.69
677.69
672.360
672.360
673.922
677.365
678.194
678.200
JARAK (m)
DISTANCE (m)
7.92
5.10
17.00
0.5
3.00
1.00
5.00

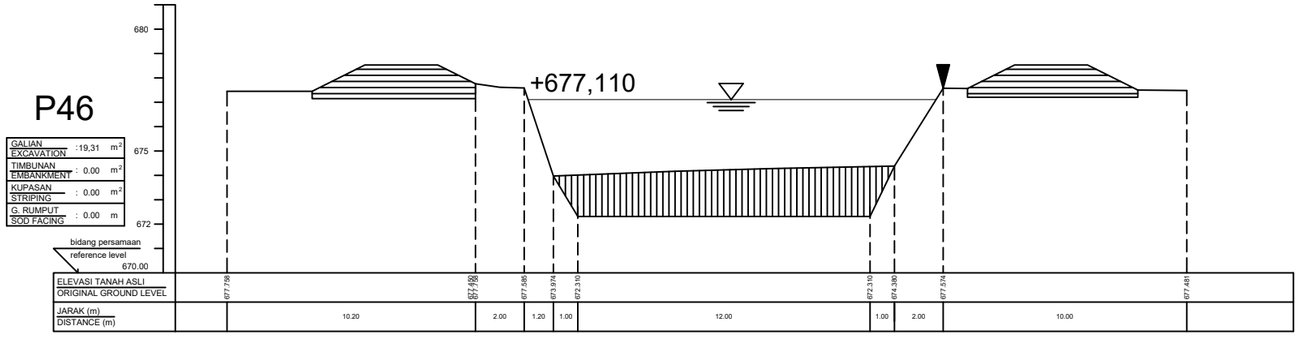
P46
GALIAN EXCAVATION :19,31 m²
TIMBUNAN EMBANKMENT : 0.00 m²
KUPASAN STRIPING : 0.00 m²
G. RUMPUT SOD FACING : 0.00 m
680
675
672
+677,110
bidang persamaan
reference level
670.00
ELEVASI TANAH ASLI
ORIGINAL GROUND LEVEL
677.759
677.758
677.585
673.976
672.310
672.310
674.385
677.574
677.481
JARAK (m)
DISTANCE (m)
10.20
2.00
1.20
1.00
12.00
1.00
2.00
10.00

P45+50

GALIAN / EXCAVATION	:18,13	m^2
TIMBUNAN / EMBANKMENT	: 0.00	m^2
KUPASAN / STRIPING	: 0.00	m^2
G. RUMPUT / SOD FACING	: 0.00	m

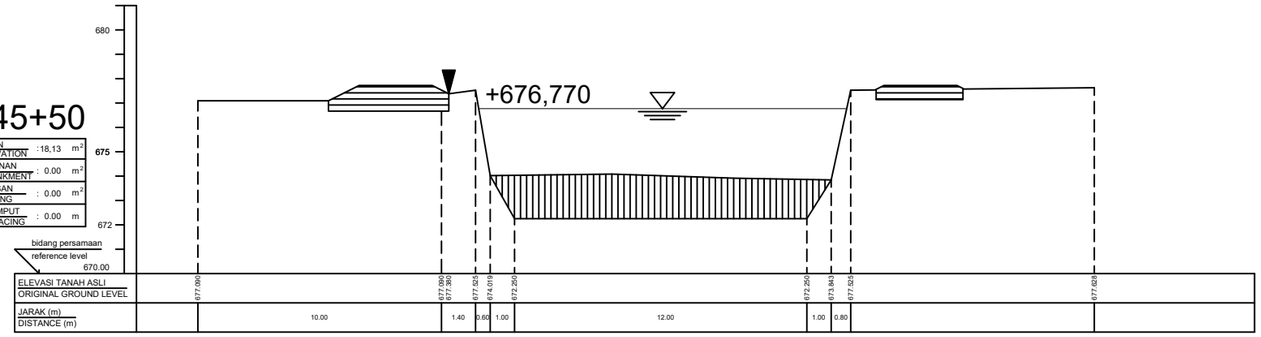

P45

GALIAN / EXCAVATION	: 7,79	m^2
TIMBUNAN / EMBANKMENT	: 0.00	m^2
KUPASAN / STRIPING	: 0.00	m^2
G. RUMPUT / SOD FACING	: 0.00	m

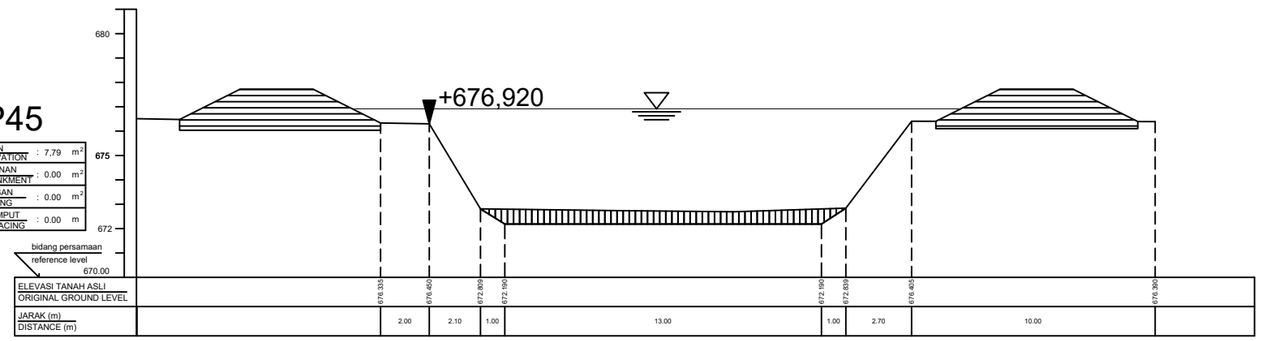

P44+50

GALIAN / EXCAVATION	:22,03	m^2
TIMBUNAN / EMBANKMENT	: 0.00	m^2
KUPASAN / STRIPING	: 0.00	m^2
G. RUMPUT / SOD FACING	: 0.00	m

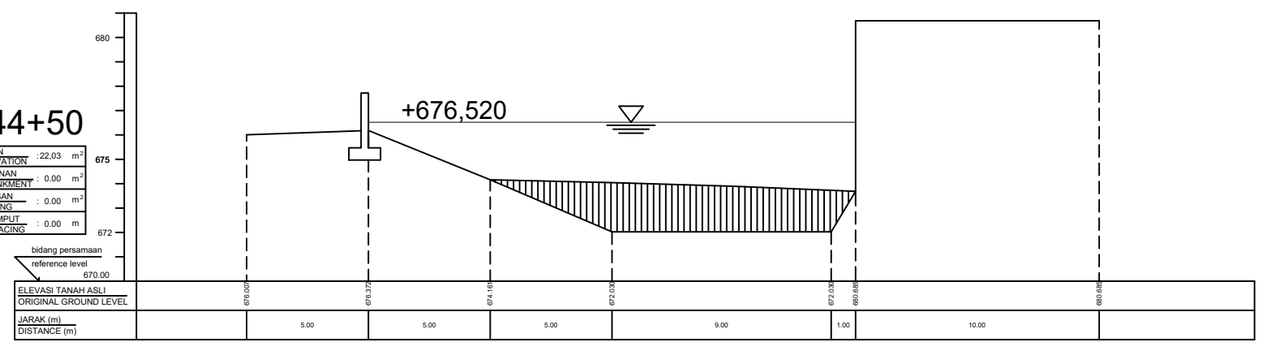

P44

GALIAN / EXCAVATION	: 14,75	m^2
TIMBUNAN / EMBANKMENT	: 0.00	m^2
KUPASAN / STRIPING	: 0.00	m^2
G. RUMPUT / SOD FACING	: 0.00	m

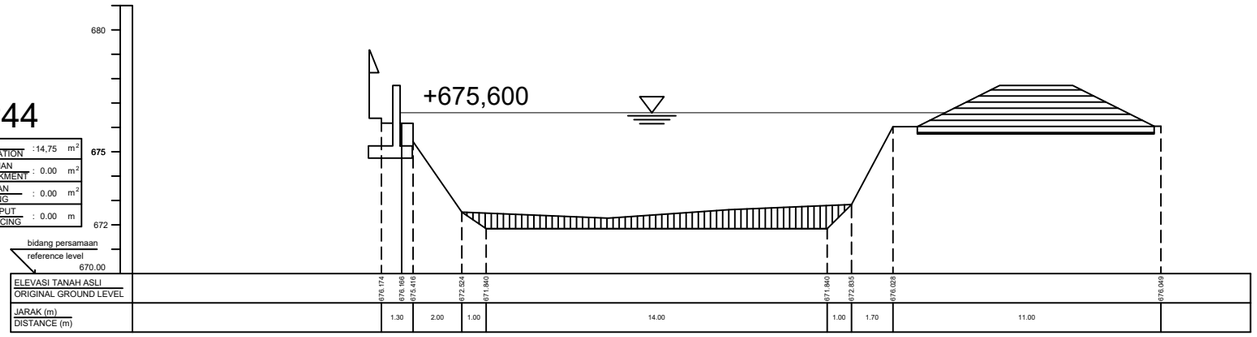

P43+50

GALIAN / EXCAVATION	: 30,04	m^2
TIMBUNAN / EMBANKMENT	: 0.00	m^2
KUPASAN / STRIPING	: 0.00	m^2
G. RUMPUT / SOD FACING	: 0.00	m

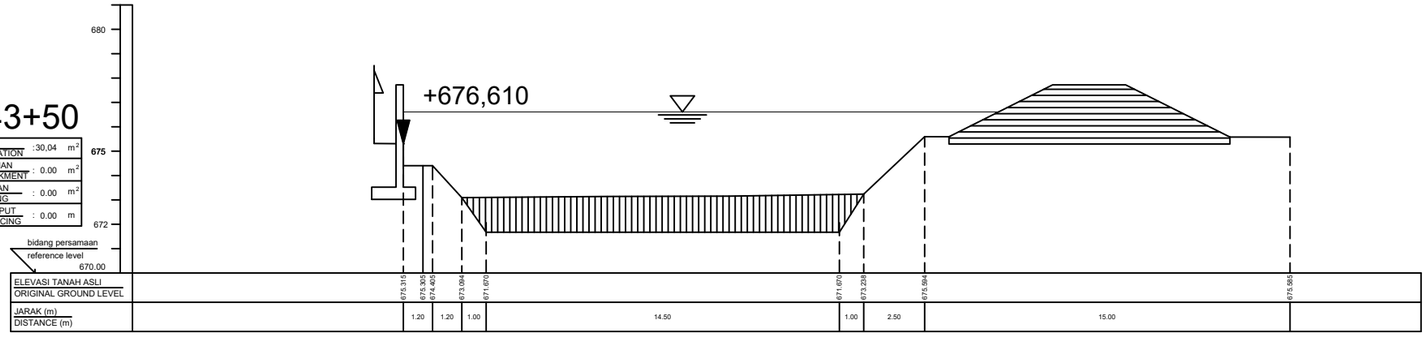

P43

GALIAN / EXCAVATION	: 15,67	m^2
TIMBUNAN / EMBANKMENT	: 0.00	m^2
KUPASAN / STRIPING	: 0.00	m^2
G. RUMPUT / SOD FACING	: 0.00	m

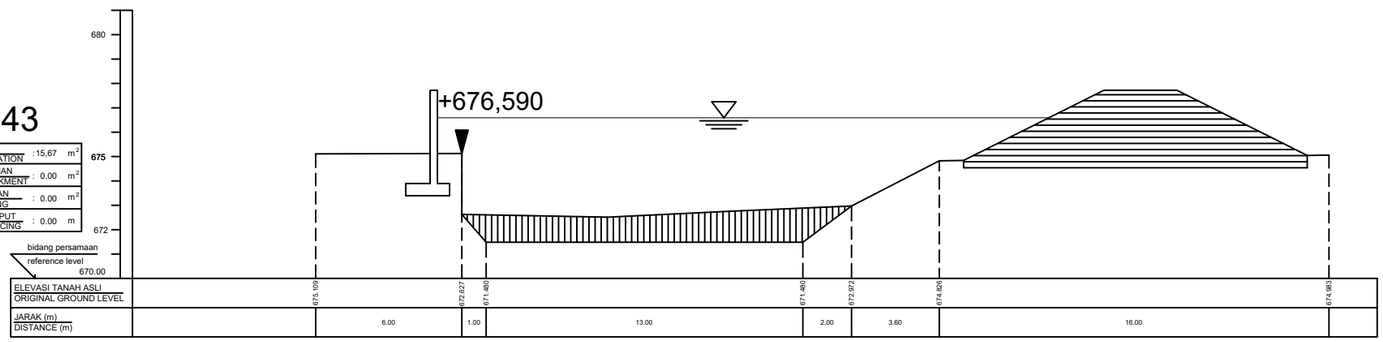

P42+50

GALIAN / EXCAVATION	: 23,69	m^2
TIMBUNAN / EMBANKMENT	: 0.00	m^2
KUPASAN / STRIPING	: 0.00	m^2
G. RUMPUT / SOD FACING	: 0.00	m

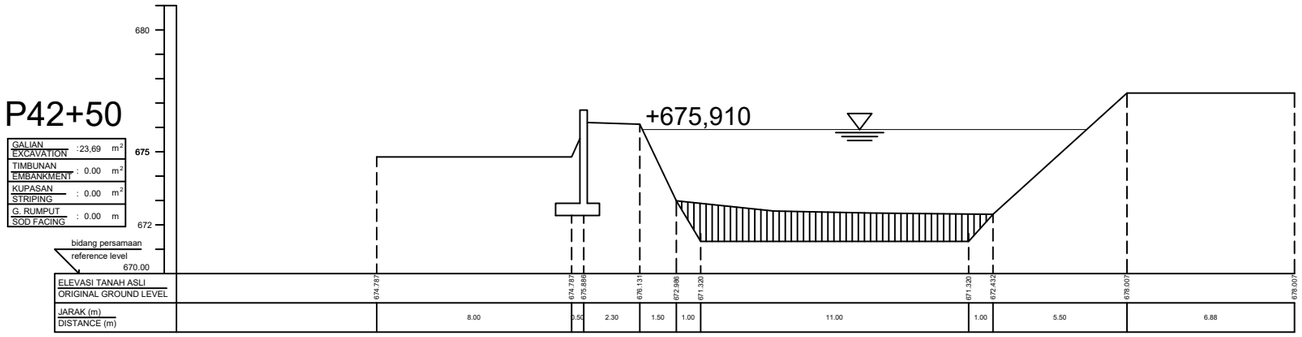

P42

GALIAN / EXCAVATION	: 23,94	m^2
TIMBUNAN / EMBANKMENT	: 0.00	m^2
KUPASAN / STRIPING	: 0.00	m^2
G. RUMPUT / SOD FACING	: 0.00	m

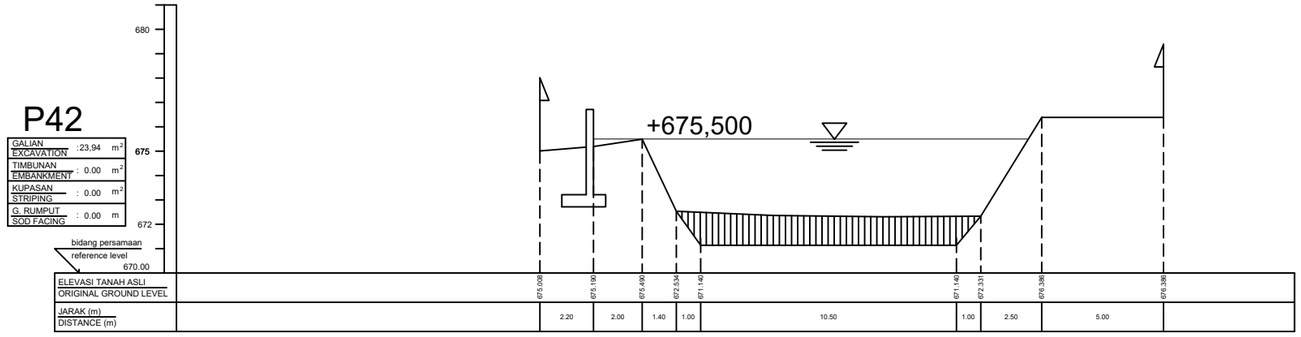

P41+50

GALIAN / EXCAVATION	: 13,02	m^2
TIMBUNAN / EMBANKMENT	: 0.00	m^2
KUPASAN / STRIPING	: 0.00	m^2
G. RUMPUT / SOD FACING	: 0.00	m

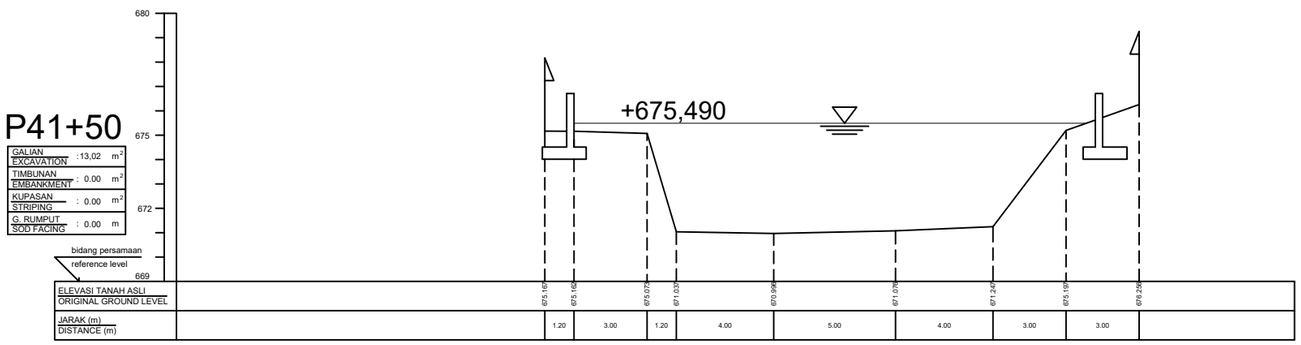

P41

GALIAN / EXCAVATION	: 0.00	m^2
TIMBUNAN / EMBANKMENT	: 0.00	m^2
KUPASAN / STRIPING	: 0.00	m^2
G. RUMPUT / SOD FACING	: 0.00	m

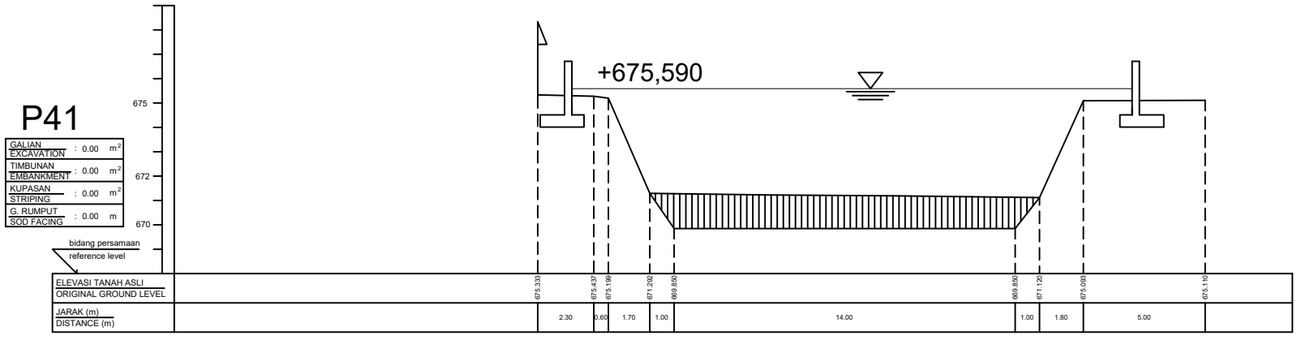

P40+50

GALIAN / EXCAVATION	:29,78	m^2
TIMBUNAN / EMBANKMENT	: 0.00	m^2
KUPASAN / STRIPING	: 0.00	m^2
G. RUMPUT / SOD FACING	: 0.00	m

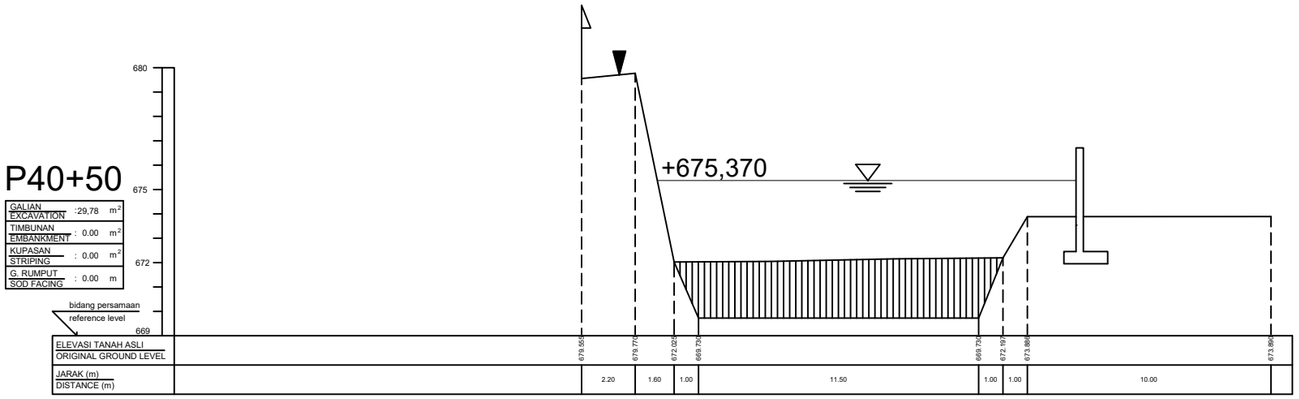

P40

GALIAN / EXCAVATION	: 0.00	m^2
TIMBUNAN / EMBANKMENT	: 0.00	m^2
KUPASAN / STRIPING	: 0.00	m^2
G. RUMPUT / SOD FACING	: 0.00	m

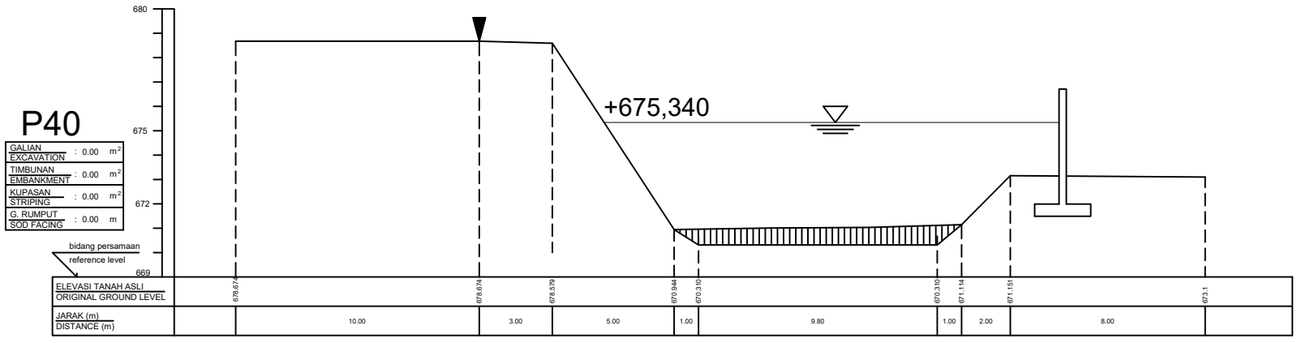

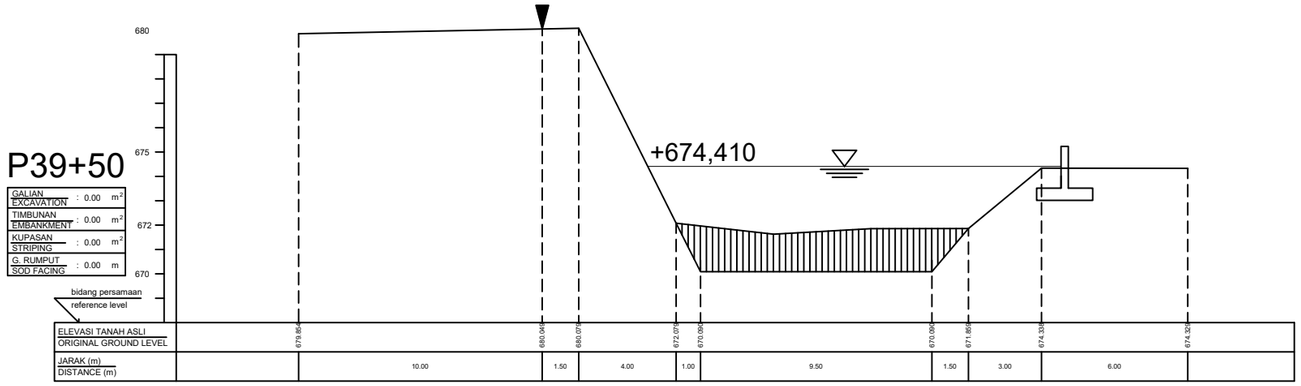
P39+50
GALIAN EXCAVATION : 0.00 m²
TIMBUNAN EMBANKMENT : 0.00 m²
KUPASAN STRIPING : 0.00 m²
G. RUMPUT SOD FACING : 0.00 m
680
675
672
670
+674,410
bidang persamaan
reference level
ELEVASI TANAH ASLI
ORIGINAL GROUND LEVEL
679.85
680.00
680.07
672.07
670.00
670.00
671.66
674.33
674.32
JARAK (m)
DISTANCE (m)
10.00
1.50
4.00
1.00
9.50
1.50
3.00
6.00

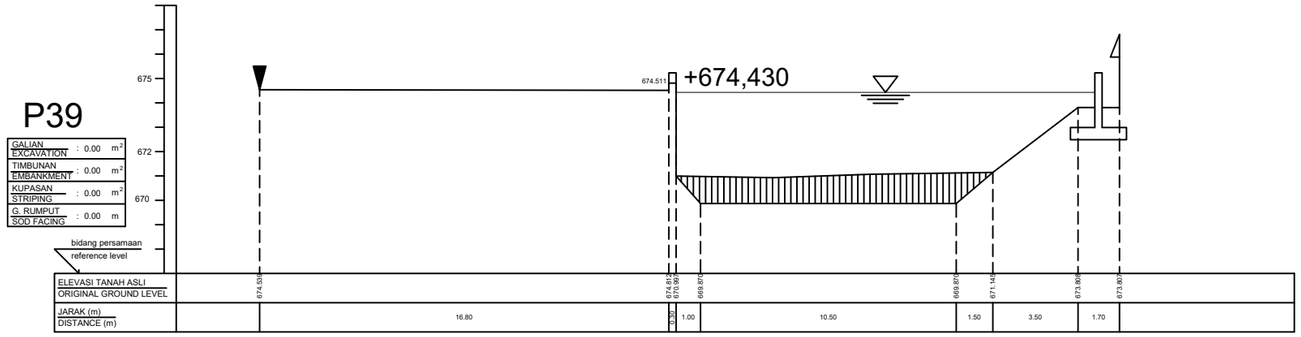
P39
GALIAN EXCAVATION : 0.00 m²
TIMBUNAN EMBANKMENT : 0.00 m²
KUPASAN STRIPING : 0.00 m²
G. RUMPUT SOD FACING : 0.00 m
675
672
670
674.511
+674,430
bidang persamaan
reference level
ELEVASI TANAH ASLI
ORIGINAL GROUND LEVEL
674.03
674.81
670.99
669.87
669.87
671.14
673.80
673.80
JARAK (m)
DISTANCE (m)
16.80
1.30
1.00
10.50
1.50
3.50
1.70

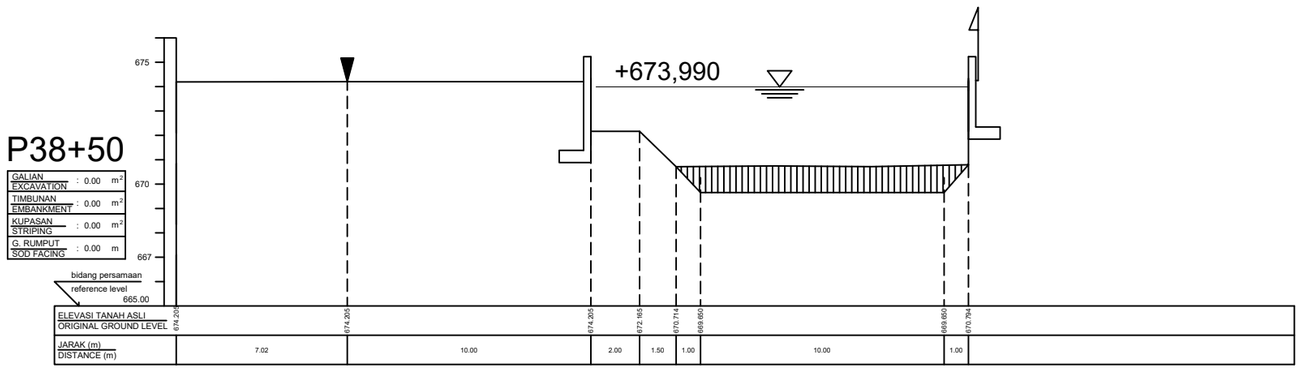
P38+50
GALIAN EXCAVATION : 0.00 m²
TIMBUNAN EMBANKMENT : 0.00 m²
KUPASAN STRIPING : 0.00 m²
G. RUMPUT SOD FACING : 0.00 m
675
670
667
665.00
+673,990
bidang persamaan
reference level
ELEVASI TANAH ASLI
ORIGINAL GROUND LEVEL
674.205
674.205
674.205
672.165
670.714
669.660
669.660
670.794
JARAK (m)
DISTANCE (m)
7.02
10.00
2.00
1.50
1.00
10.00
1.00

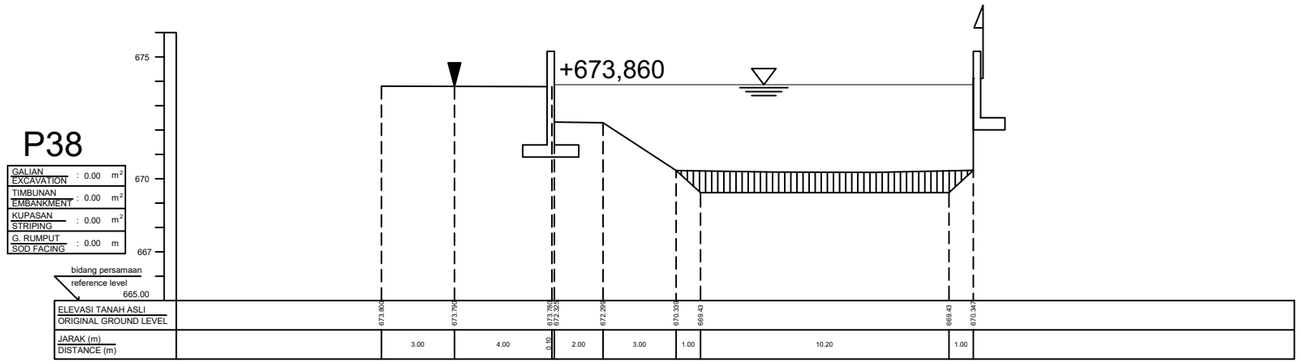
P38
GALIAN EXCAVATION : 0.00 m²
TIMBUNAN EMBANKMENT : 0.00 m²
KUPASAN STRIPING : 0.00 m²
G. RUMPUT SOD FACING : 0.00 m
675
670
667
bidang persamaan
reference level
665.00
+673,860
ELEVASI TANAH ASLI
ORIGINAL GROUND LEVEL
673.80
673.79
673.79
672.32
672.29
670.29
669.43
669.43
670.34
JARAK (m)
DISTANCE (m)
3.00
4.00
0.00
2.00
3.00
1.00
10.20
1.00

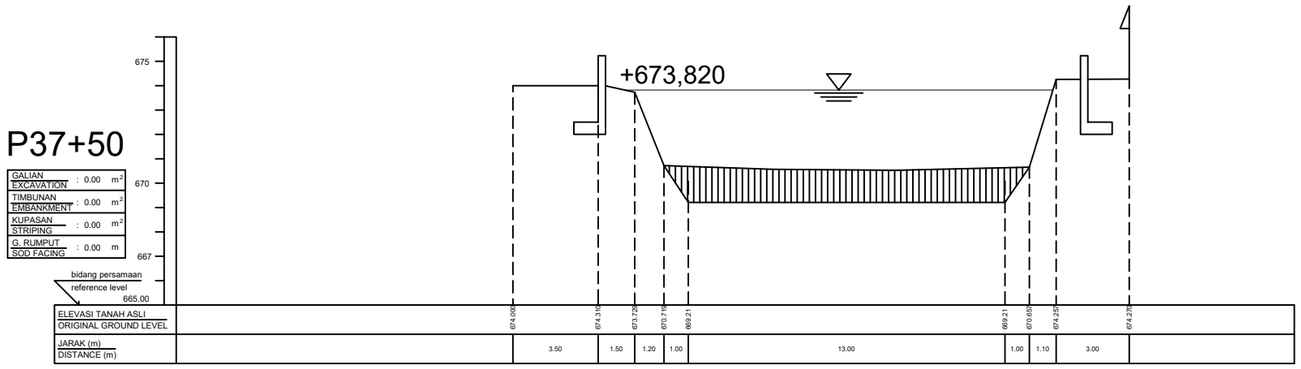
P37+50
GALIAN EXCAVATION : 0.00 m²
TIMBUNAN EMBANKMENT : 0.00 m²
KUPASAN STRIPING : 0.00 m²
G. RUMPUT SOD FACING : 0.00 m
675
670
667
bidang persamaan
reference level
665.00
+673,820
ELEVASI TANAH ASLI
ORIGINAL GROUND LEVEL
674.00
674.31
673.72
670.79
669.21
669.21
670.65
674.25
674.27
JARAK (m)
DISTANCE (m)
3.50
1.50
1.20
1.00
13.00
1.00
1.10
3.00

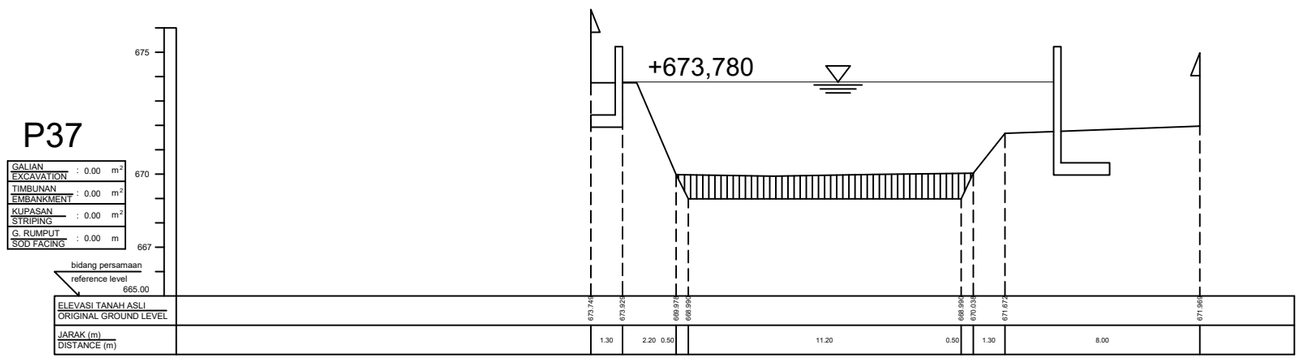
P37
GALIAN EXCAVATION : 0.00 m²
TIMBUNAN EMBANKMENT : 0.00 m²
KUPASAN STRIPING : 0.00 m²
G. RUMPUT SOD FACING : 0.00 m
675
670
667
bidang persamaan
reference level
665.00
+673,780
ELEVASI TANAH ASLI
ORIGINAL GROUND LEVEL
673.74
673.92
669.97
668.96
668.96
670.03
671.67
671.96
JARAK (m)
DISTANCE (m)
1.30
2.20
0.50
11.20
0.50
1.30
8.00

P36+50

GALIAN / EXCAVATION	: 0.00	m^2
TIMBUNAN / EMBANKMENT	: 0.00	m^2
KUPASAN / STRIPING	: 0.00	m^2
G. RUMPUT / SOD FACING	: 0.00	m

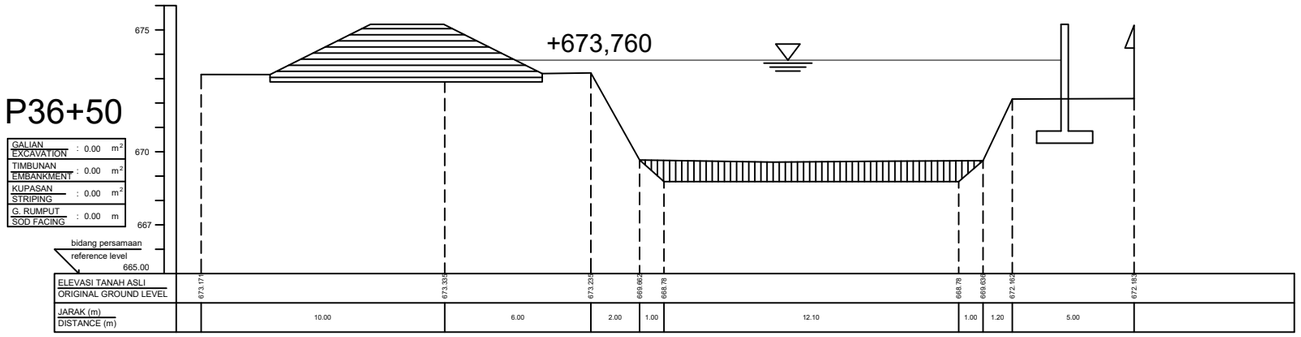

P36

GALIAN / EXCAVATION	: 0.00	m^2
TIMBUNAN / EMBANKMENT	: 0.00	m^2
KUPASAN / STRIPING	: 0.00	m^2
G. RUMPUT / SOD FACING	: 0.00	m

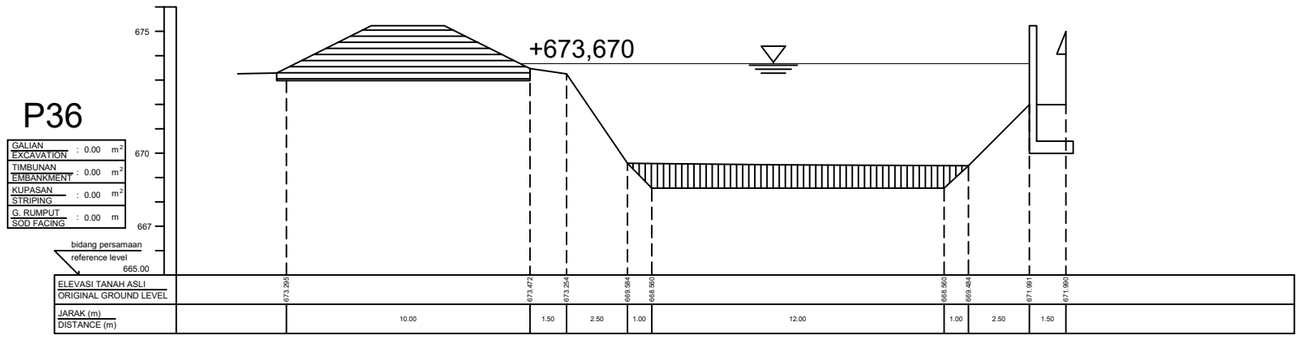

P35+50

GALIAN / EXCAVATION	: 0.00	m^2
TIMBUNAN / EMBANKMENT	: 0.00	m^2
KUPASAN / STRIPING	: 0.00	m^2
G. RUMPUT / SOD FACING	: 0.00	m

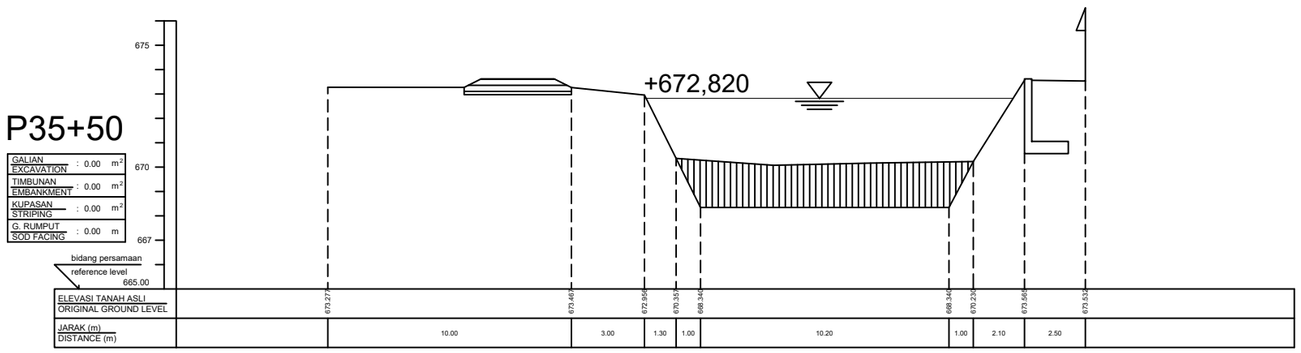

P35

GALIAN / EXCAVATION	: 0.00	m^2
TIMBUNAN / EMBANKMENT	: 0.00	m^2
KUPASAN / STRIPING	: 0.00	m^2
G. RUMPUT / SOD FACING	: 0.00	m

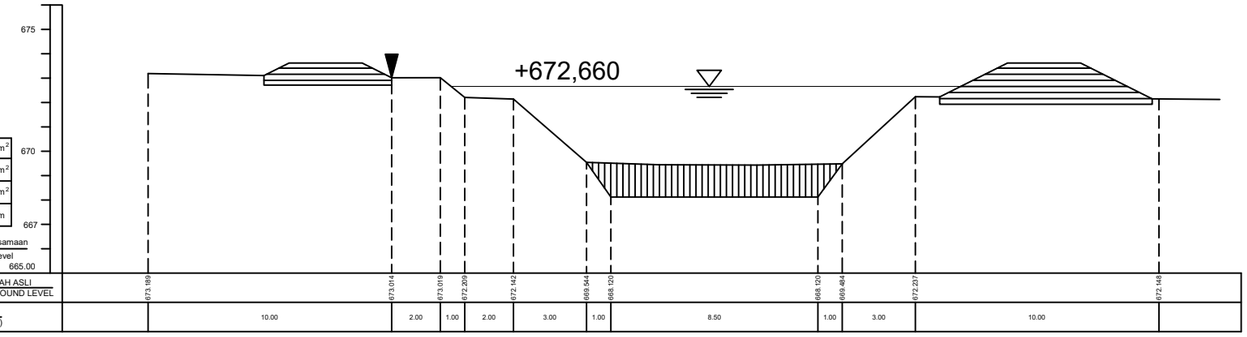

P34+50

GALIAN / EXCAVATION	: 0.00	m^2
TIMBUNAN / EMBANKMENT	: 0.00	m^2
KUPASAN / STRIPING	: 0.00	m^2
G. RUMPUT / SOD FACING	: 0.00	m

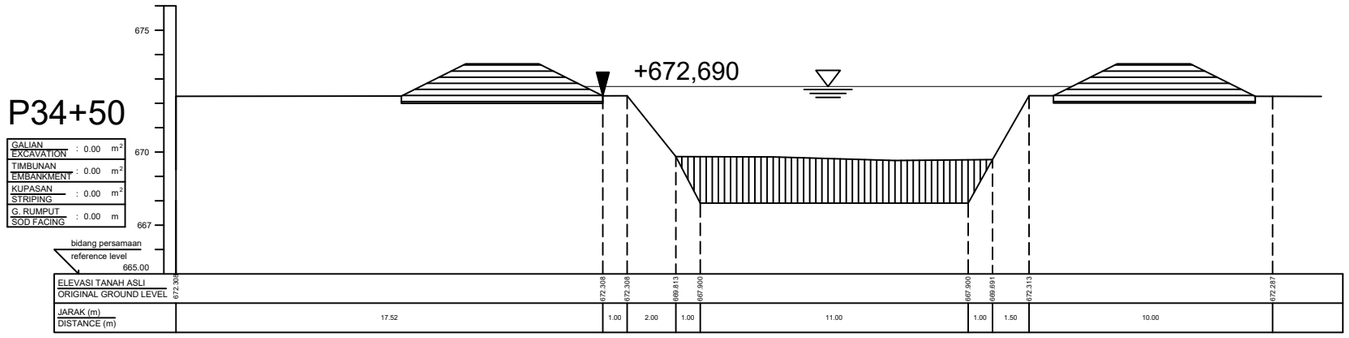

P34

GALIAN / EXCAVATION	: 0.00	m^2
TIMBUNAN / EMBANKMENT	: 0.00	m^2
KUPASAN / STRIPING	: 0.00	m^2
G. RUMPUT / SOD FACING	: 0.00	m

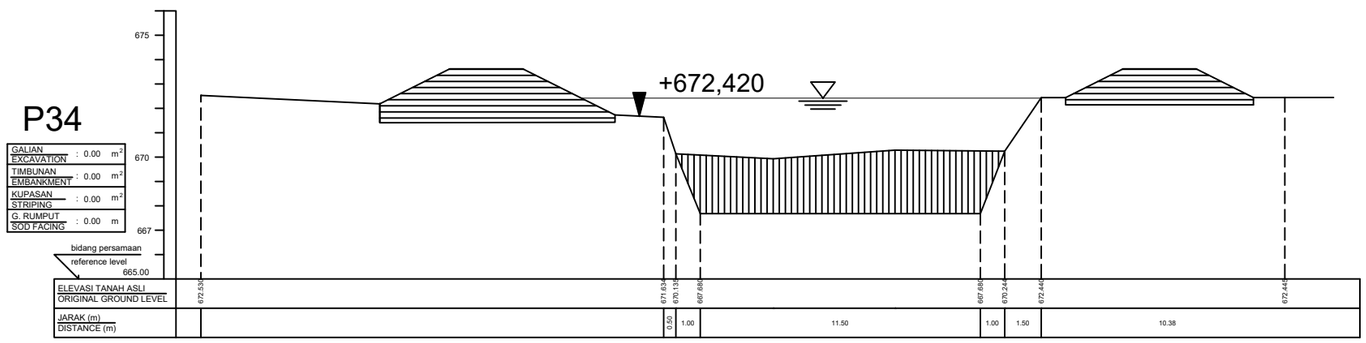

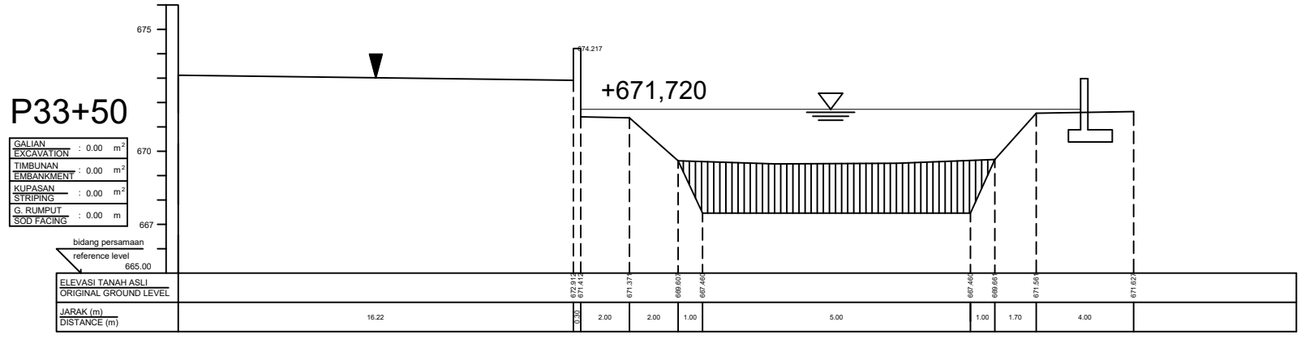
P33+50
GALIAN EXCAVATION : 0.00 m²
TIMBUNAN EMBANKMENT : 0.00 m²
KUPASAN STRIPING : 0.00 m²
G. RUMPUT SOD FACING : 0.00 m
675
670
667
bidang persamaan
reference level
665.00
674.217
+671,720
ELEVASI TANAH ASLI
ORIGINAL GROUND LEVEL
672.915
671.413
671.371
669.603
667.460
667.460
668.661
671.561
671.623
JARAK (m)
DISTANCE (m)
16.22
0.50
2.00
2.00
1.00
5.00
1.00
1.70
4.00

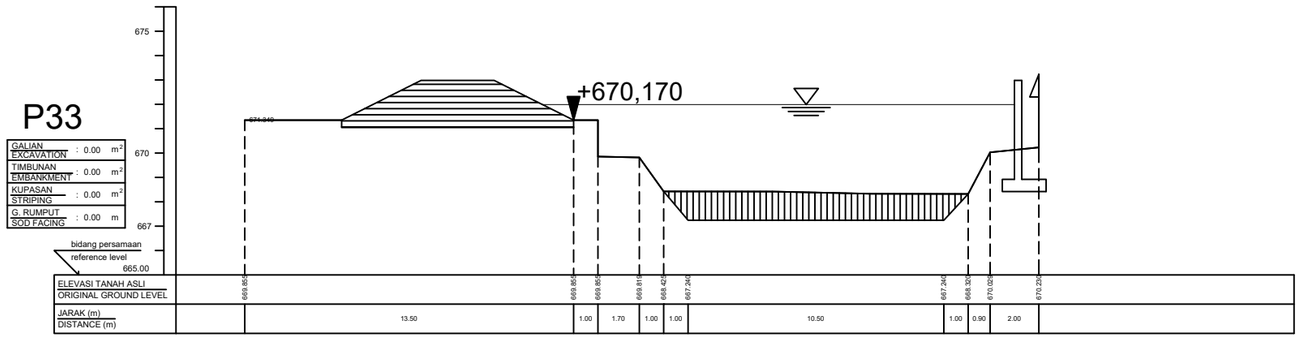
P33
GALIAN EXCAVATION : 0.00 m²
TIMBUNAN EMBANKMENT : 0.00 m²
KUPASAN STRIPING : 0.00 m²
G. RUMPUT SOD FACING : 0.00 m
675
670
667
bidang persamaan
reference level
665.00
+670,170
ELEVASI TANAH ASLI
ORIGINAL GROUND LEVEL
669.805
669.805
669.805
669.811
668.421
667.246
667.246
668.321
670.026
670.225
JARAK (m)
DISTANCE (m)
13.50
1.00
1.70
1.00
1.00
10.50
1.00
0.90
2.00

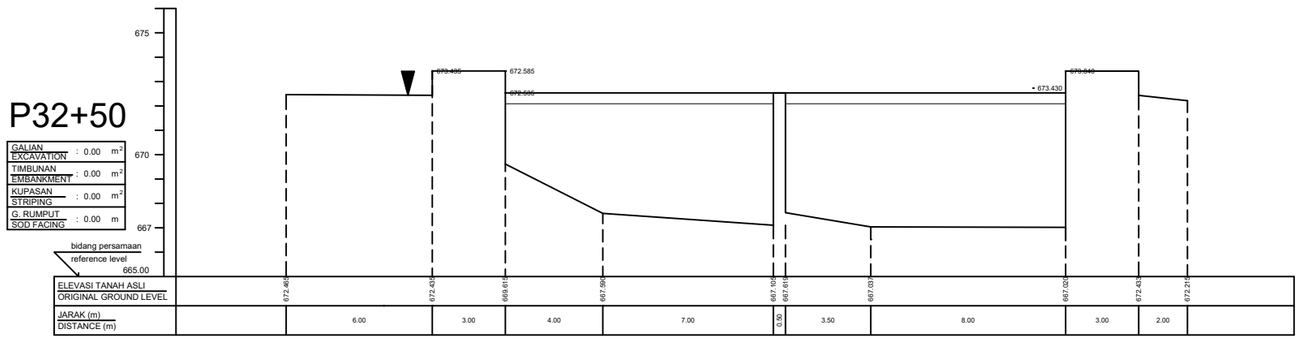
P32+50
GALIAN EXCAVATION : 0.00 m²
TIMBUNAN EMBANKMENT : 0.00 m²
KUPASAN STRIPING : 0.00 m²
G. RUMPUT SOD FACING : 0.00 m
675
670
667
bidang persamaan
reference level
665.00
673.435
672.585
672.585
673.430
673.849
ELEVASI TANAH ASLI
ORIGINAL GROUND LEVEL
672.405
672.435
669.615
667.990
667.100
667.615
667.031
667.020
672.435
672.215
JARAK (m)
DISTANCE (m)
6.00
3.00
4.00
7.00
0.50
3.50
8.00
3.00
2.00

P31+90

GALIAN / EXCAVATION	: 0.00	m^2
TIMBUNAN / EMBANKMENT	: 0.00	m^2
KUPASAN / STRIPING	: 0.00	m^2
G. RUMPUT / SOD FACING	: 0.00	m

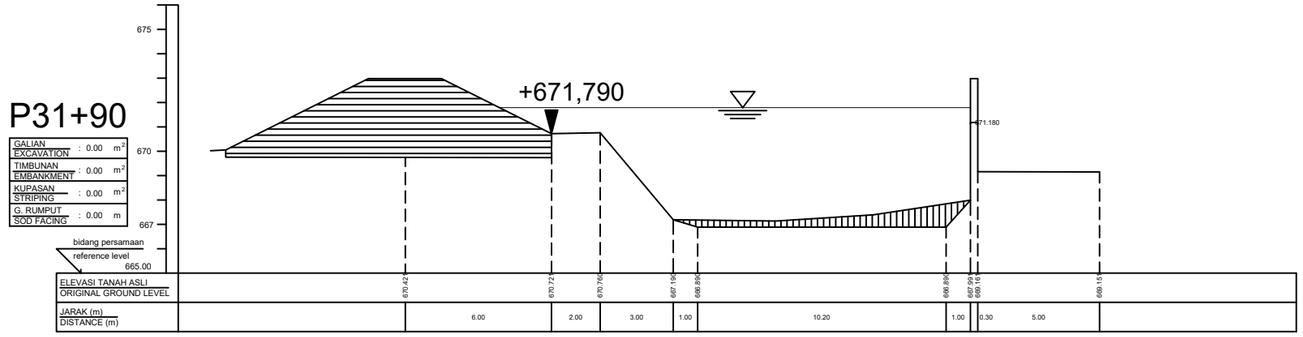

P31+50

GALIAN / EXCAVATION	: 0.00	m^2
TIMBUNAN / EMBANKMENT	: 0.00	m^2
KUPASAN / STRIPING	: 0.00	m^2
G. RUMPUT / SOD FACING	: 0.00	m

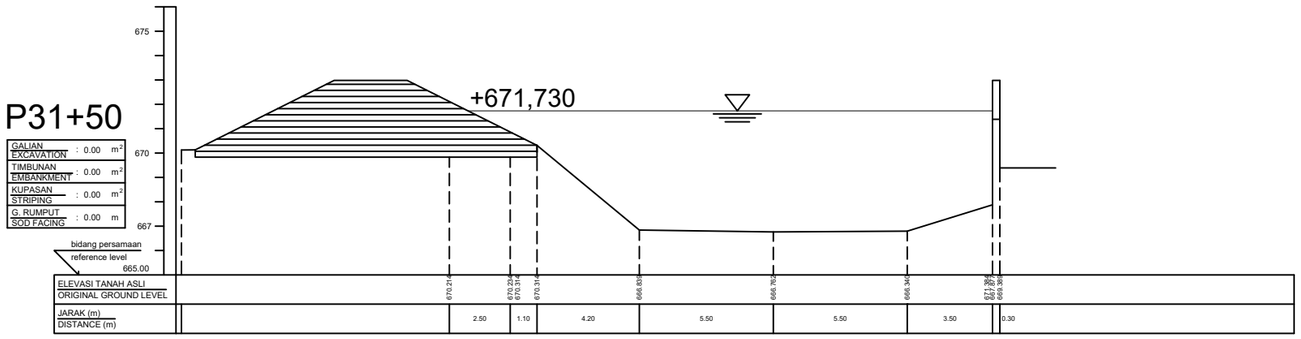

P31

GALIAN / EXCAVATION	: 0.00	m^2
TIMBUNAN / EMBANKMENT	: 0.00	m^2
KUPASAN / STRIPING	: 0.00	m^2
G. RUMPUT / SOD FACING	: 0.00	m

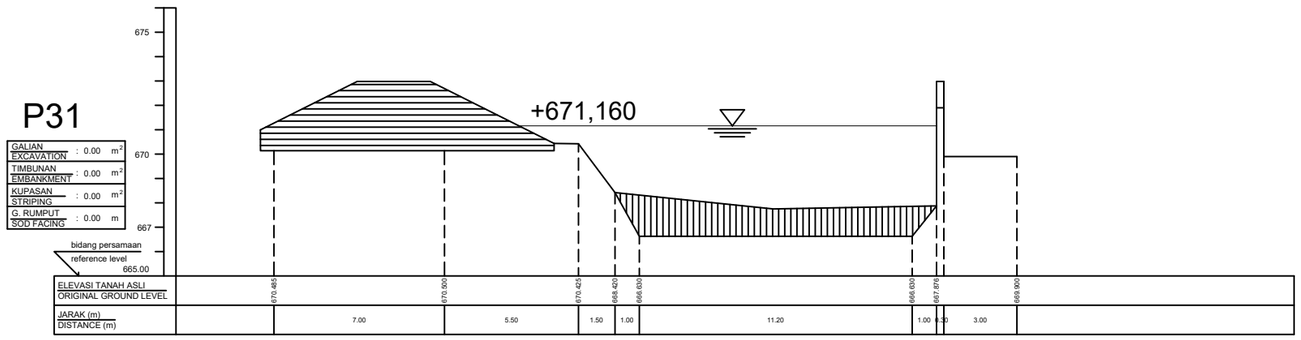

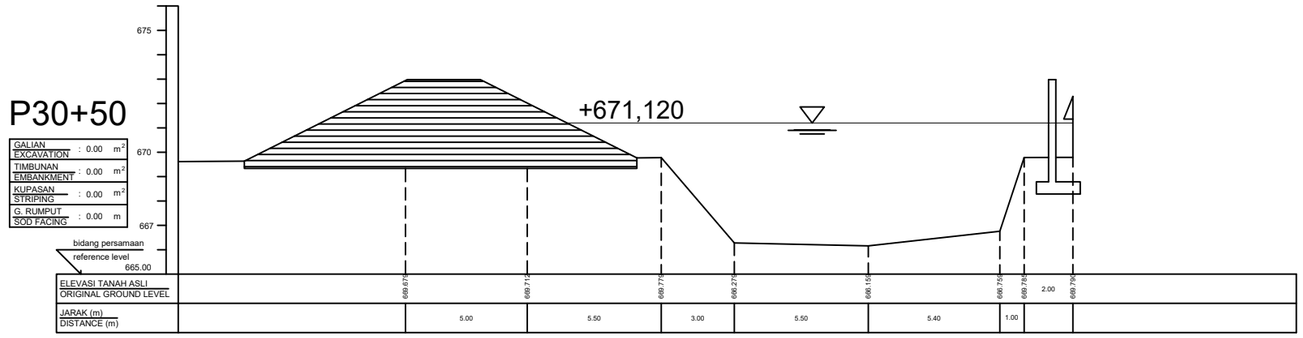
P30+50
GALIAN EXCAVATION : 0.00 m²
TIMBUNAN EMBANKMENT : 0.00 m²
KUPASAN STRIPING : 0.00 m²
G. RUMPUT SOD FACING : 0.00 m
675
670
667
+671,120
bidang persamaan
reference level
665.00
ELEVASI TANAH ASLI
ORIGINAL GROUND LEVEL
668.675
669.715
669.775
669.275
668.155
666.755
668.785
669.790
2.00
JARAK (m)
DISTANCE (m)
5.00
5.50
3.00
5.50
5.40
1.00

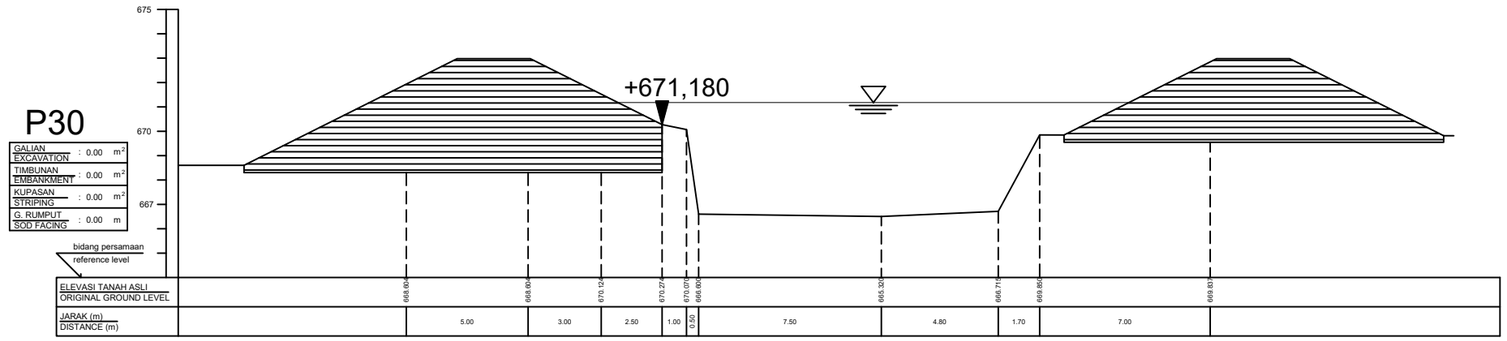
P30
GALIAN EXCAVATION : 0.00 m²
TIMBUNAN EMBANKMENT : 0.00 m²
KUPASAN STRIPING : 0.00 m²
G. RUMPUT SOD FACING : 0.00 m
675
670
667
+671,180
bidang persamaan
reference level
ELEVASI TANAH ASLI
ORIGINAL GROUND LEVEL
668.605
668.605
670.121
670.271
670.071
666.605
665.321
666.715
669.855
669.831
JARAK (m)
DISTANCE (m)
5.00
3.00
2.50
1.00
0.50
7.50
4.80
1.70
7.00

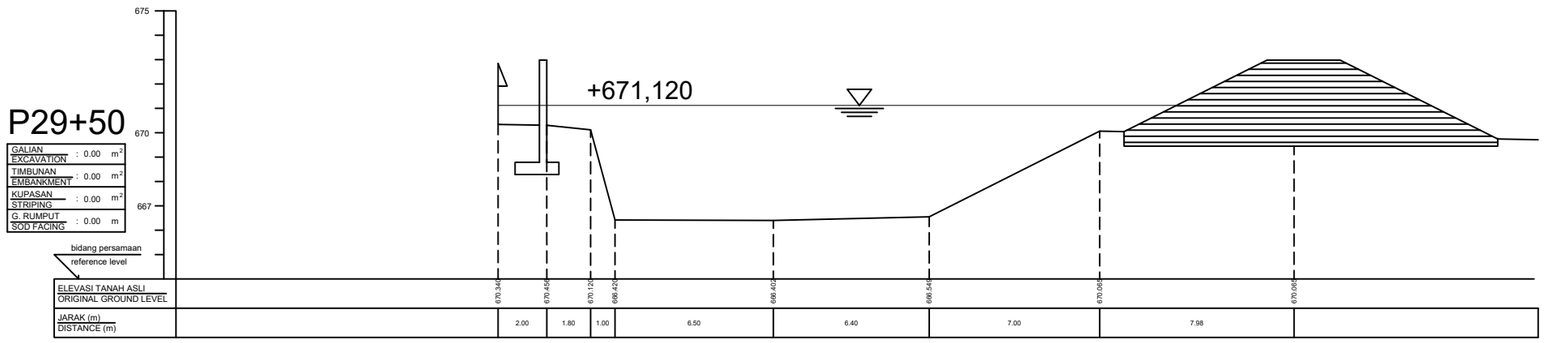
P29+50
GALIAN EXCAVATION : 0.00 m²
TIMBUNAN EMBANKMENT : 0.00 m²
KUPASAN STRIPING : 0.00 m²
G. RUMPUT SOD FACING : 0.00 m
675
670
667
+671,120
bidang persamaan
reference level
ELEVASI TANAH ASLI
ORIGINAL GROUND LEVEL
670.345
670.455
670.121
666.425
666.405
666.545
670.065
670.065
JARAK (m)
DISTANCE (m)
2.00
1.80
1.00
6.50
6.40
7.00
7.98

P29

GALIAN / EXCAVATION	: 0.00	m^2
TIMBUNAN / EMBANKMENT	: 0.00	m^2
KUPASAN / STRIPING	: 0.00	m^2
G. RUMPUT / SOD FACING	: 0.00	m

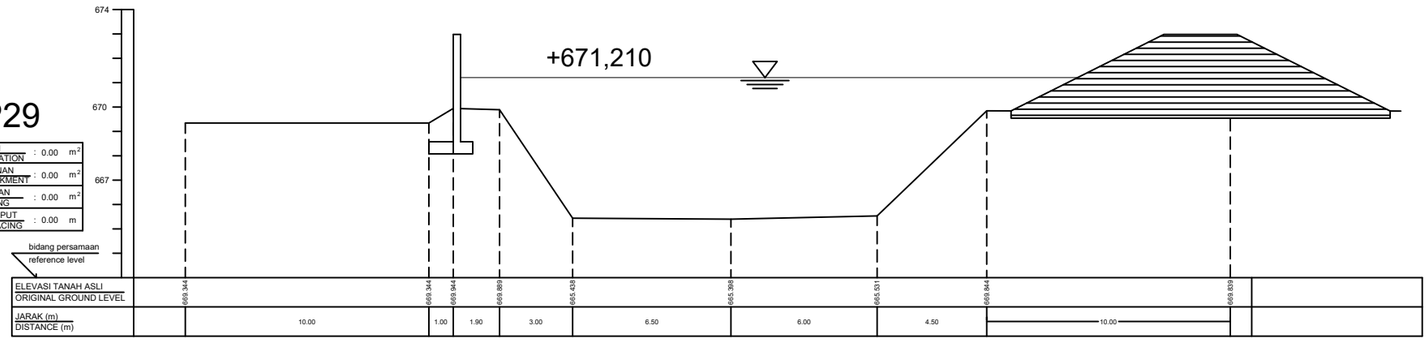

P28+50

GALIAN / EXCAVATION	: 0.00	m^2
TIMBUNAN / EMBANKMENT	: 0.00	m^2
KUPASAN / STRIPING	: 0.00	m^2
G. RUMPUT / SOD FACING	: 0.00	m

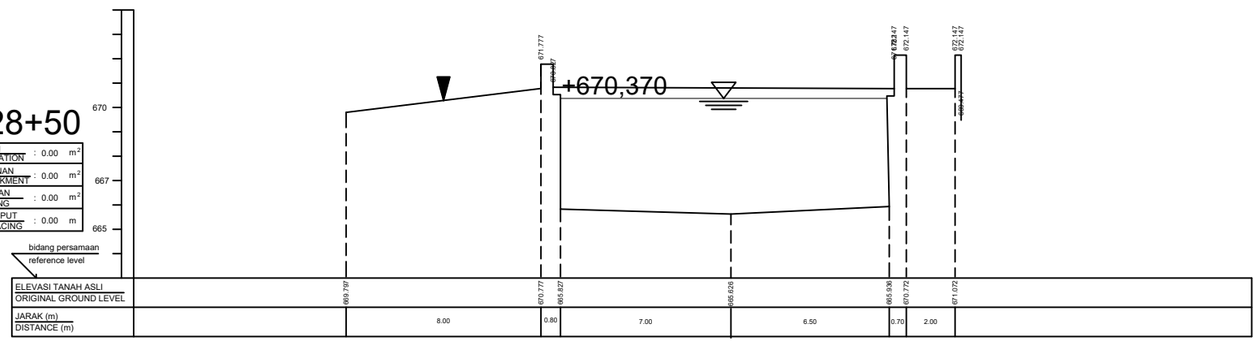

P28

GALIAN / EXCAVATION	: 0.00	m^2
TIMBUNAN / EMBANKMENT	: 0.00	m^2
KUPASAN / STRIPING	: 0.00	m^2
G. RUMPUT / SOD FACING	: 0.00	m

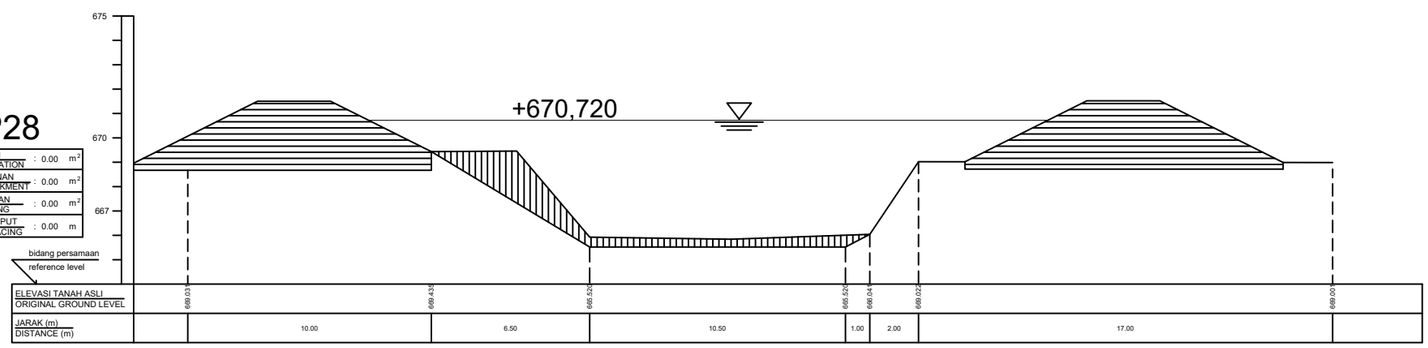

P27+50

GALIAN / EXCAVATION	: 0.00	m^2
TIMBUNAN / EMBANKMENT	: 0.00	m^2
KUPASAN / STRIPING	: 0.00	m^2
G. RUMPUT / SOD FACING	: 0.00	m

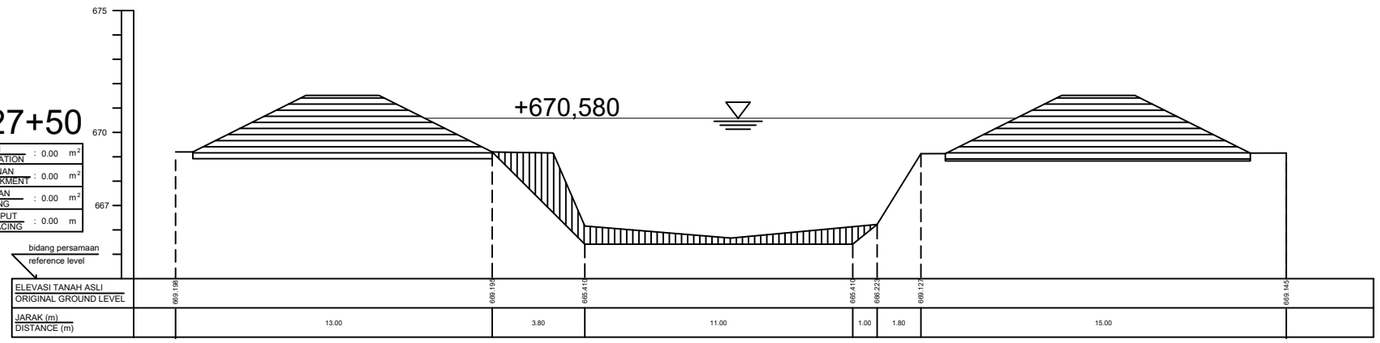

P27

GALIAN / EXCAVATION	: 0.00	m^2
TIMBUNAN / EMBANKMENT	: 0.00	m^2
KUPASAN / STRIPING	: 0.00	m^2
G. RUMPUT / SOD FACING	: 0.00	m

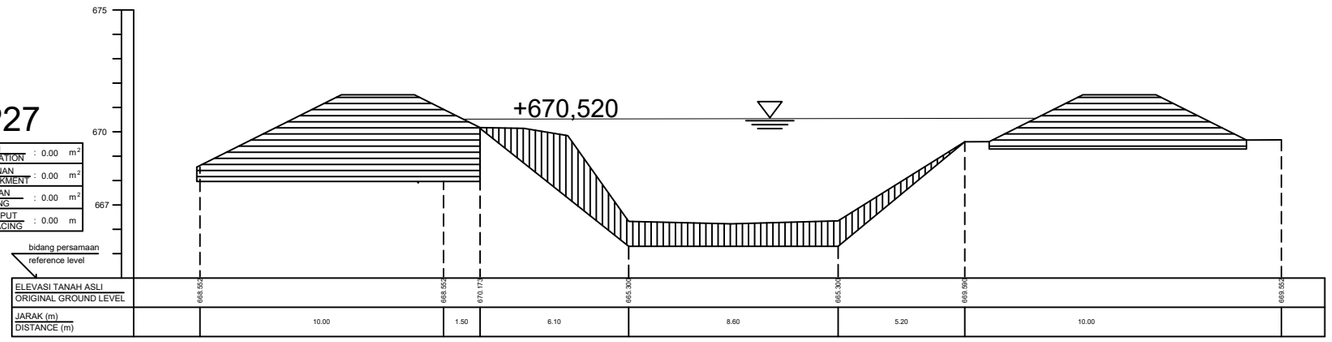

P26+50

GALIAN / EXCAVATION	: 0.00	m^2
TIMBUNAN / EMBANKMENT	: 0.00	m^2
KUPASAN / STRIPING	: 0.00	m^2
G. RUMPUT / SOD FACING	: 0.00	m

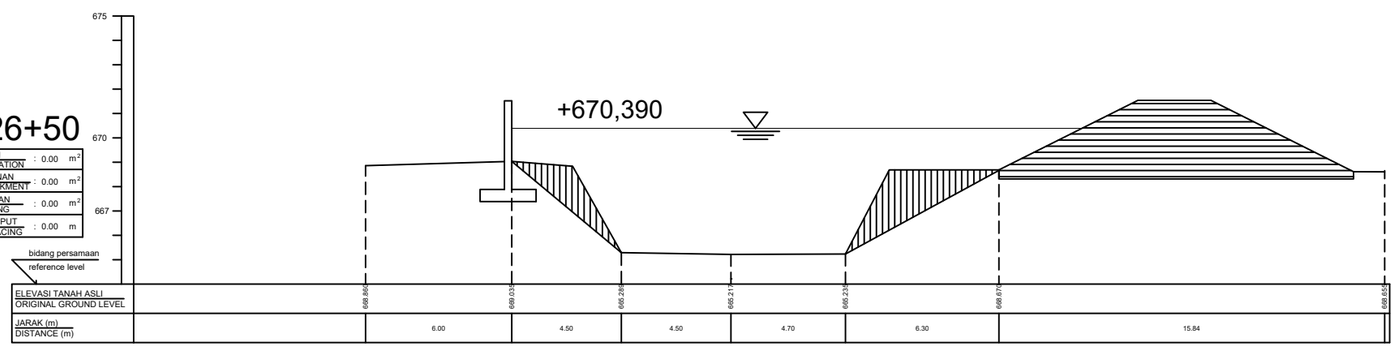

P26

GALIAN / EXCAVATION	: 0.00	m^2
TIMBUNAN / EMBANKMENT	: 0.00	m^2
KUPASAN / STRIPING	: 0.00	m^2
G. RUMPUT / SOD FACING	: 0.00	m

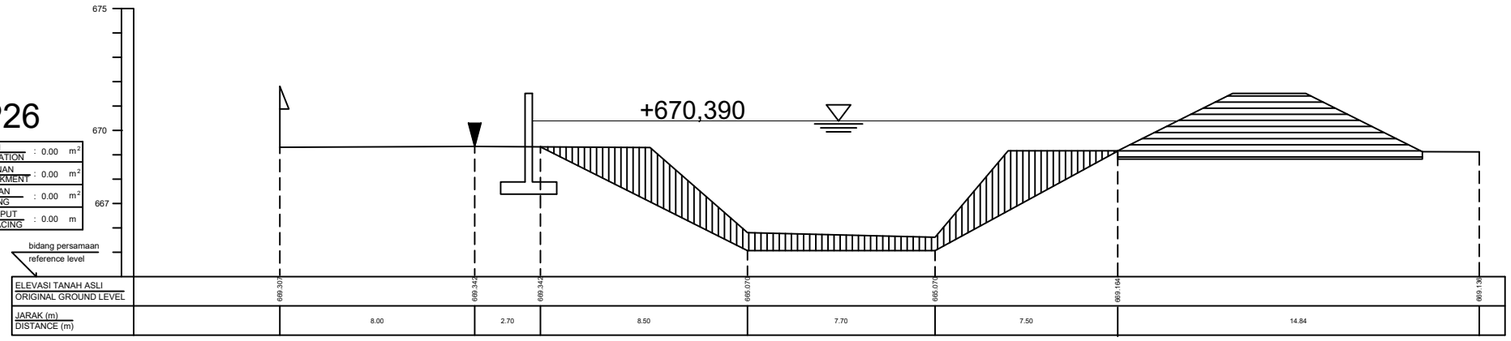

P25+50

GALIAN / EXCAVATION	: 0.00	m^2
TIMBUNAN / EMBANKMENT	: 0.00	m^2
KUPASAN / STRIPING	: 0.00	m^2
G. RUMPUT / SOD FACING	: 0.00	m

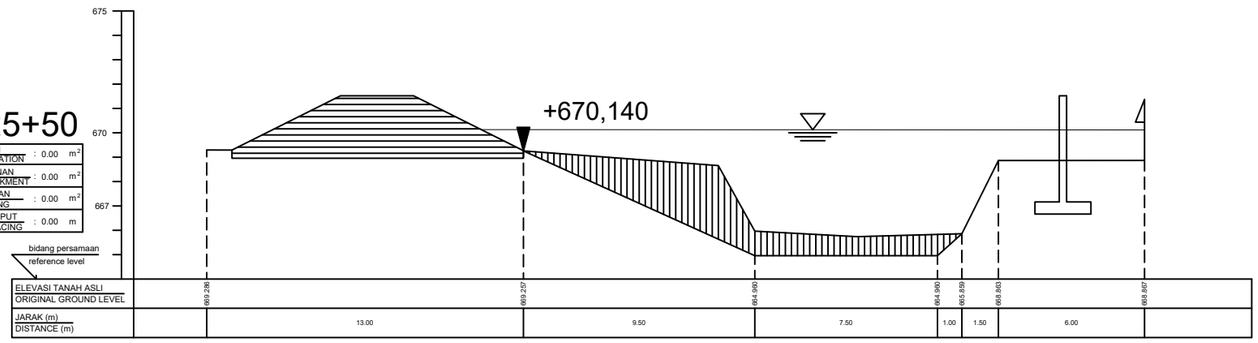

P25

GALIAN / EXCAVATION	: 0.00	m^2
TIMBUNAN / EMBANKMENT	: 0.00	m^2
KUPASAN / STRIPING	: 0.00	m^2
G. RUMPUT / SOD FACING	: 0.00	m

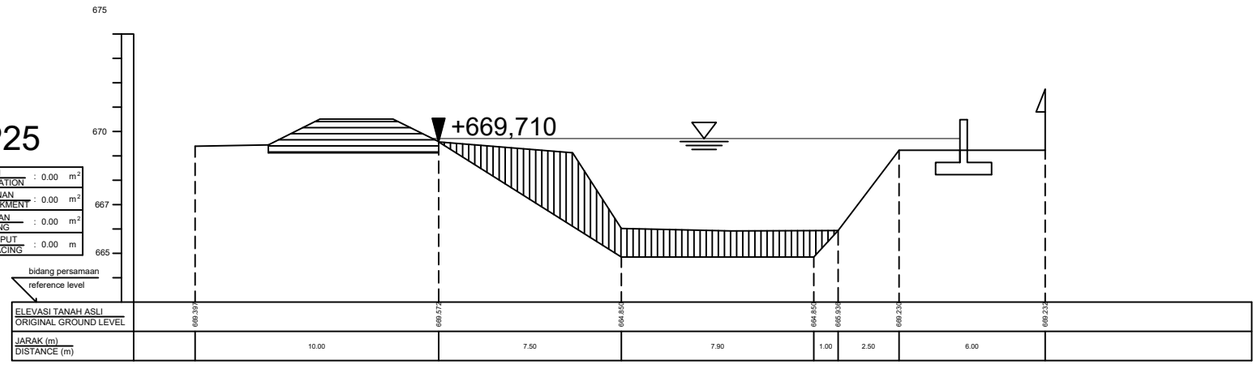

P24+50

GALIAN / EXCAVATION	: 0.00	m^2
TIMBUNAN / EMBANKMENT	: 0.00	m^2
KUPASAN / STRIPING	: 0.00	m^2
G. RUMPUT / SOD FACING	: 0.00	m

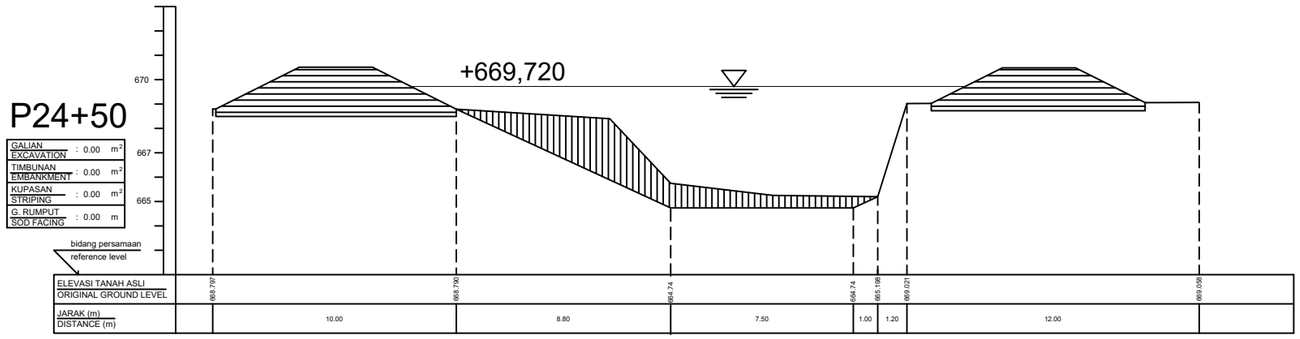

P24

GALIAN / EXCAVATION	: 0.00	m^2
TIMBUNAN / EMBANKMENT	: 0.00	m^2
KUPASAN / STRIPING	: 0.00	m^2
G. RUMPUT / SOD FACING	: 0.00	m

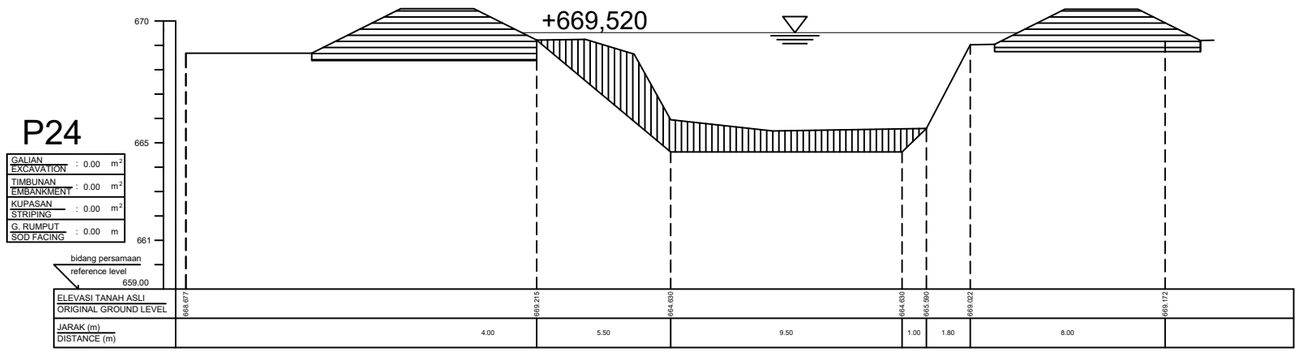

P23+50

GALIAN / EXCAVATION	: 0.00	m^2
TIMBUNAN / EMBANKMENT	: 0.00	m^2
KUPASAN / STRIPING	: 0.00	m^2
G. RUMPUT / SOD FACING	: 0.00	m

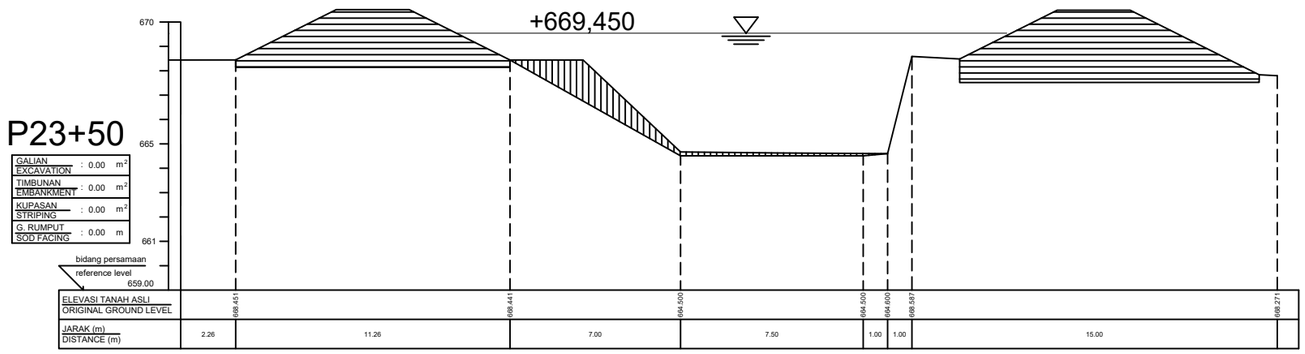

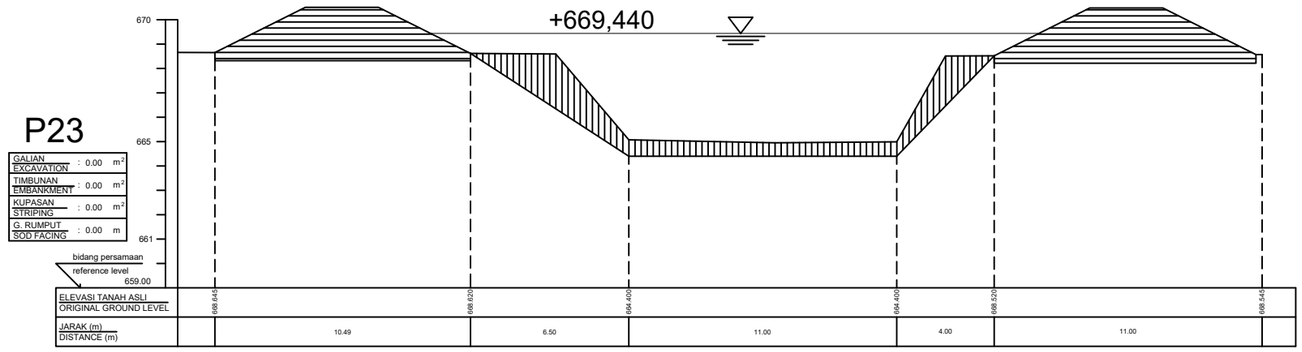
+669,440
670
665
661
P23
GALIAN EXCAVATION : 0.00 m²
TIMBUNAN EMBANKMENT : 0.00 m²
KUPASAN STRIPING : 0.00 m²
G. RUMPUT SOD FACING : 0.00 m
bidang persamaan
reference level
659.00
ELEVASI TANAH ASLI
ORIGINAL GROUND LEVEL
668.845
668.620
664.400
664.400
668.520
668.845
JARAK (m)
DISTANCE (m)
10.49
6.50
11.00
4.00
11.00

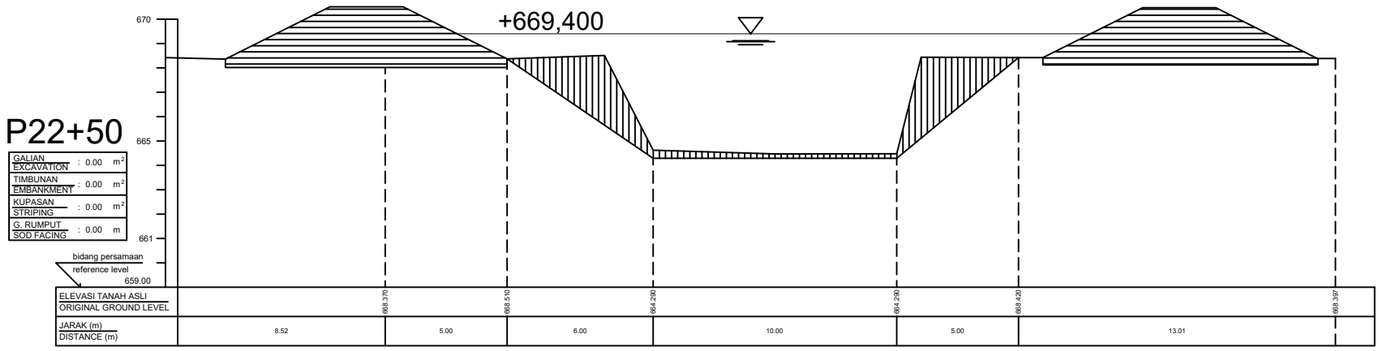
+669,400
670
665
661
P22+50
GALIAN EXCAVATION : 0.00 m²
TIMBUNAN EMBANKMENT : 0.00 m²
KUPASAN STRIPING : 0.00 m²
G. RUMPUT SOD FACING : 0.00 m
bidang persamaan
reference level
659.00
ELEVASI TANAH ASLI
ORIGINAL GROUND LEVEL
668.370
668.510
664.290
664.290
668.420
668.397
JARAK (m)
DISTANCE (m)
8.52
5.00
6.00
10.00
5.00
13.01

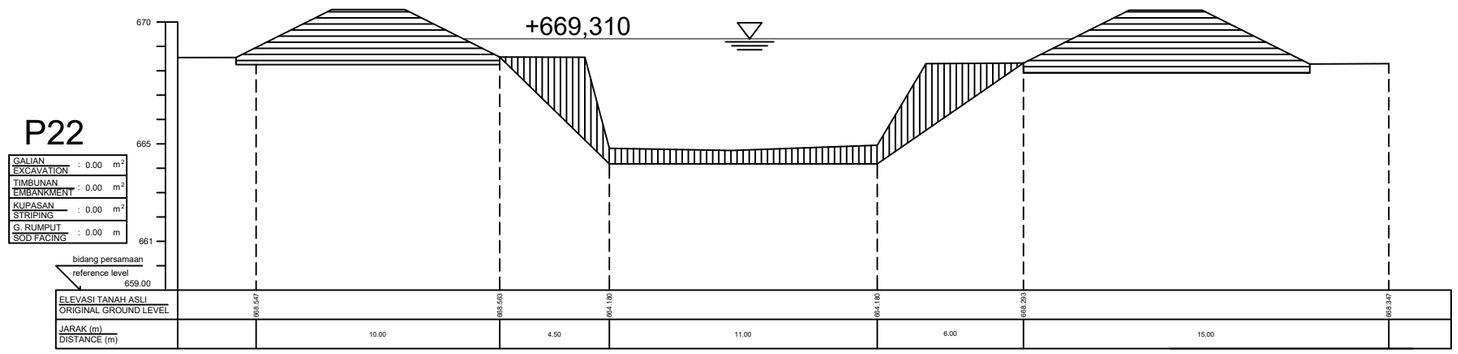
+669,310
670
665
661
P22
GALIAN EXCAVATION : 0.00 m²
TIMBUNAN EMBANKMENT : 0.00 m²
KUPASAN STRIPING : 0.00 m²
G. RUMPUT SOD FACING : 0.00 m
bidang persamaan
reference level
659.00
ELEVASI TANAH ASLI
ORIGINAL GROUND LEVEL
668.547
668.503
664.180
664.180
668.293
668.347
JARAK (m)
DISTANCE (m)
10.00
4.50
11.00
6.00
15.00

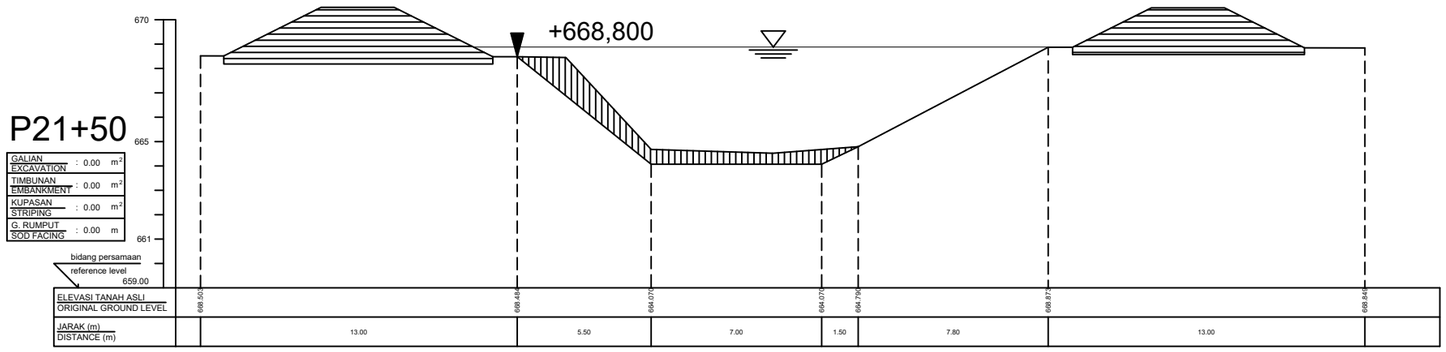
P21+50
+668,800
670
665
661
GALIAN EXCAVATION : 0.00 m²
TIMBUNAN EMBANKMENT : 0.00 m²
KUPASAN STRIPING : 0.00 m²
G. RUMPUT SOD FACING : 0.00 m
bidang persamaan
reference level
659.00
ELEVASI TANAH ASLI
ORIGINAL GROUND LEVEL
668.500
668.484
664.070
664.070
664.790
668.872
668.846
JARAK (m)
DISTANCE (m)
13.00
5.50
7.00
1.50
7.80
13.00

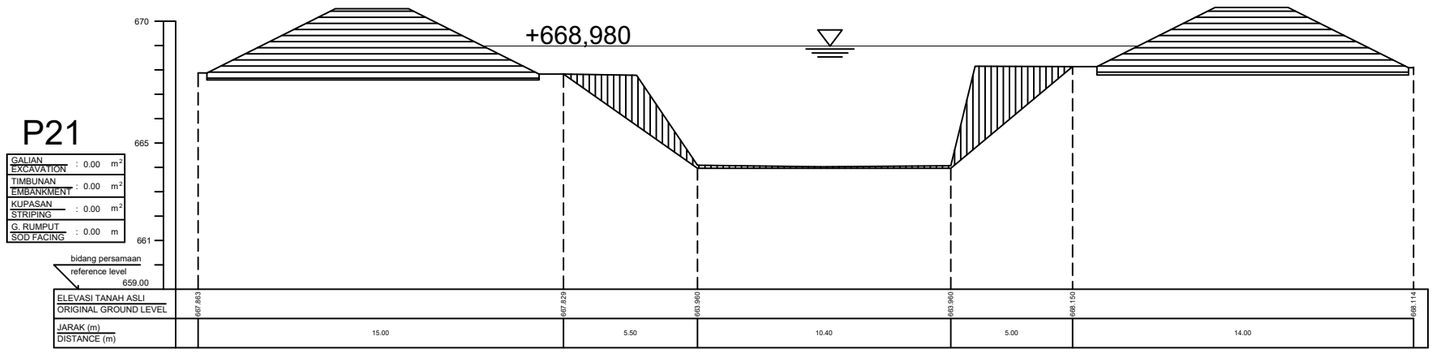
P21
+668,980
670
665
661
GALIAN EXCAVATION : 0.00 m²
TIMBUNAN EMBANKMENT : 0.00 m²
KUPASAN STRIPING : 0.00 m²
G. RUMPUT SOD FACING : 0.00 m
bidang persamaan
reference level
659.00
ELEVASI TANAH ASLI
ORIGINAL GROUND LEVEL
667.863
667.829
663.960
663.960
668.150
668.114
JARAK (m)
DISTANCE (m)
15.00
5.50
10.40
5.00
14.00

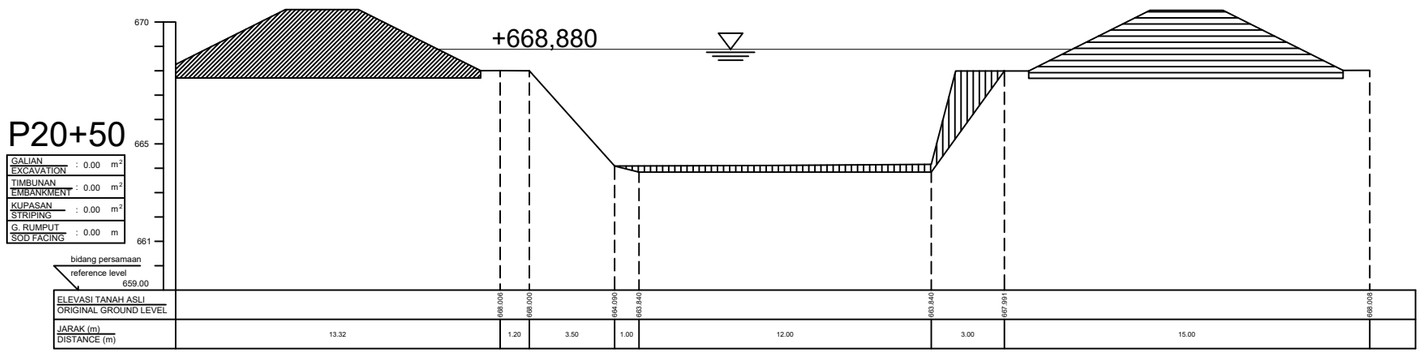
P20+50
+668,880
670
665
661
GALIAN EXCAVATION : 0.00 m²
TIMBUNAN EMBANKMENT : 0.00 m²
KUPASAN STRIPING : 0.00 m²
G. RUMPUT SOD FACING : 0.00 m
bidang persamaan
reference level
659.00
ELEVASI TANAH ASLI
ORIGINAL GROUND LEVEL
668.006
668.000
664.090
663.840
663.840
667.991
668.008
JARAK (m)
DISTANCE (m)
13.32
1.20
3.50
1.00
12.00
3.00
15.00

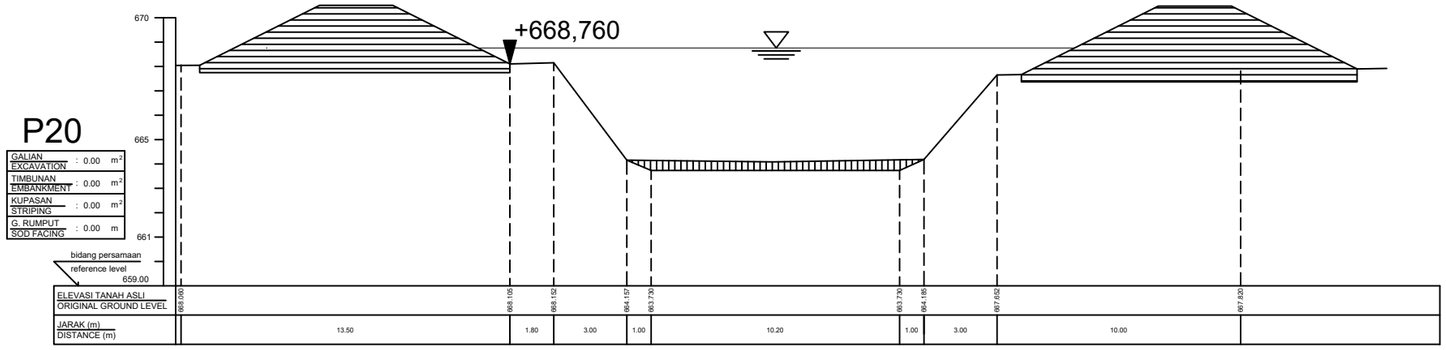
P20
GALIAN EXCAVATION : 0.00 m²
TIMBUNAN EMBANKMENT : 0.00 m²
KUPASAN STRIPING : 0.00 m²
G. RUMPUT SOD FACING : 0.00 m
+668,760
670
665
661
bidang persamaan
reference level
659.00
ELEVASI TANAH ASLI
ORIGINAL GROUND LEVEL
668.000
668.105
668.152
664.157
663.730
663.730
664.185
667.652
667.820
JARAK (m)
DISTANCE (m)
13.50
1.80
3.00
1.00
10.20
1.00
3.00
10.00

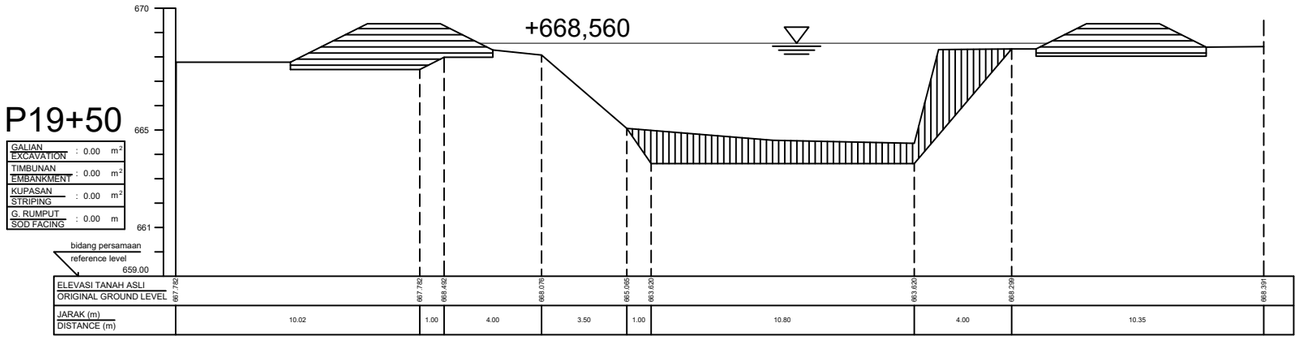
P19+50
GALIAN EXCAVATION : 0.00 m²
TIMBUNAN EMBANKMENT : 0.00 m²
KUPASAN STRIPING : 0.00 m²
G. RUMPUT SOD FACING : 0.00 m
+668,560
670
665
661
bidang persamaan
reference level
659.00
ELEVASI TANAH ASLI
ORIGINAL GROUND LEVEL
667.725
667.752
668.402
668.076
665.005
663.020
663.020
668.299
668.391
JARAK (m)
DISTANCE (m)
10.02
1.00
4.00
3.50
1.00
10.80
4.00
10.35

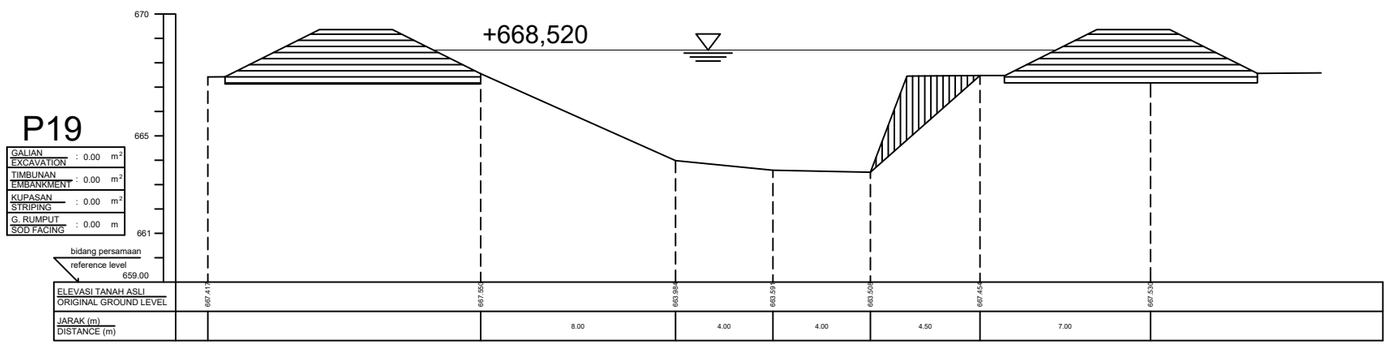
P19
GALIAN EXCAVATION : 0.00 m²
TIMBUNAN EMBANKMENT : 0.00 m²
KUPASAN STRIPING : 0.00 m²
G. RUMPUT SOD FACING : 0.00 m
+668,520
670
665
661
bidang persamaan
reference level
659.00
ELEVASI TANAH ASLI
ORIGINAL GROUND LEVEL
667.417
667.500
663.984
663.591
663.508
667.454
667.530
JARAK (m)
DISTANCE (m)
8.00
4.00
4.00
4.50
7.00

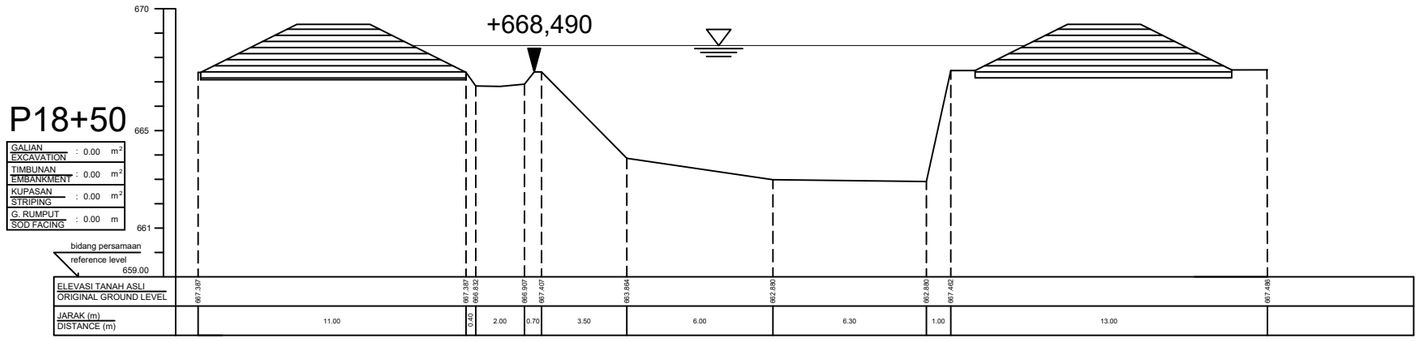
P18+50
+668,490
670
665
661
GALIAN EXCAVATION : 0.00 m²
TIMBUNAN EMBANKMENT : 0.00 m²
KUPASAN STRIPING : 0.00 m²
G. RUMPUT SOD FACING : 0.00 m
bidang persamaan
reference level
659.00
ELEVASI TANAH ASLI
ORIGINAL GROUND LEVEL
667.387
666.832
666.907
667.407
663.004
662.880
662.880
667.402
667.406
JARAK (m)
DISTANCE (m)
11.00
0.40
2.00
0.70
3.50
6.00
6.30
1.00
13.00

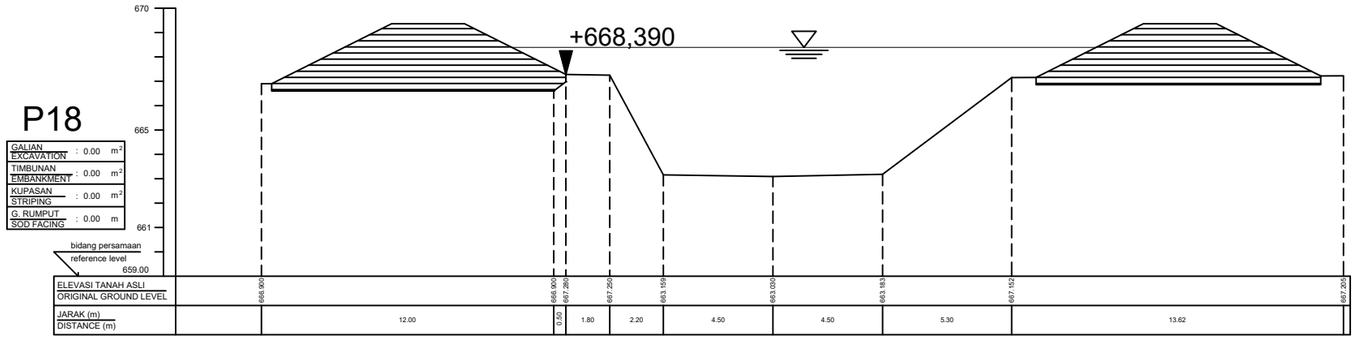
P18
+668,390
670
665
661
GALIAN EXCAVATION : 0.00 m²
TIMBUNAN EMBANKMENT : 0.00 m²
KUPASAN STRIPING : 0.00 m²
G. RUMPUT SOD FACING : 0.00 m
bidang persamaan
reference level
659.00
ELEVASI TANAH ASLI
ORIGINAL GROUND LEVEL
666.900
666.900
667.280
667.250
663.159
663.030
663.183
667.152
667.205
JARAK (m)
DISTANCE (m)
12.00
0.50
1.80
2.20
4.50
4.50
5.30
13.62

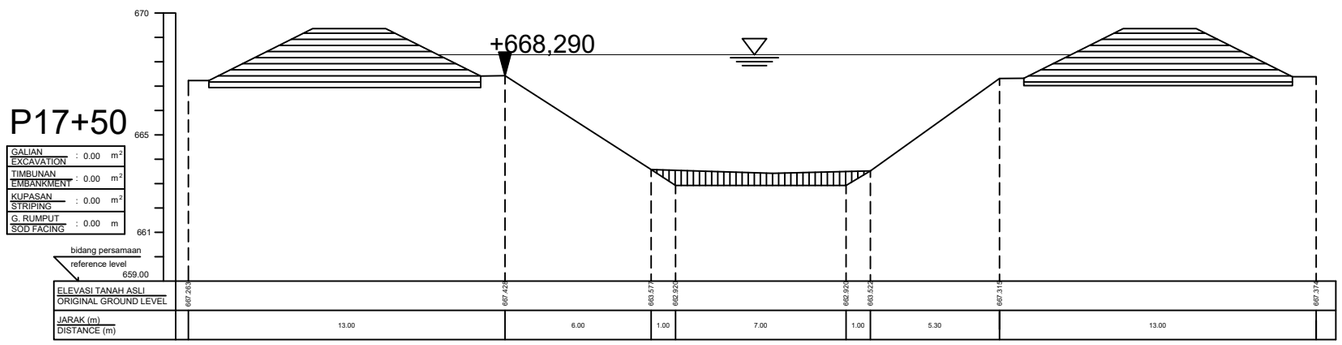
P17+50
+668,290
670
665
661
GALIAN EXCAVATION : 0.00 m²
TIMBUNAN EMBANKMENT : 0.00 m²
KUPASAN STRIPING : 0.00 m²
G. RUMPUT SOD FACING : 0.00 m
bidang persamaan
reference level
659.00
ELEVASI TANAH ASLI
ORIGINAL GROUND LEVEL
667.263
667.429
663.577
662.920
662.920
663.522
667.315
667.374
JARAK (m)
DISTANCE (m)
13.00
6.00
1.00
7.00
1.00
5.30
13.00

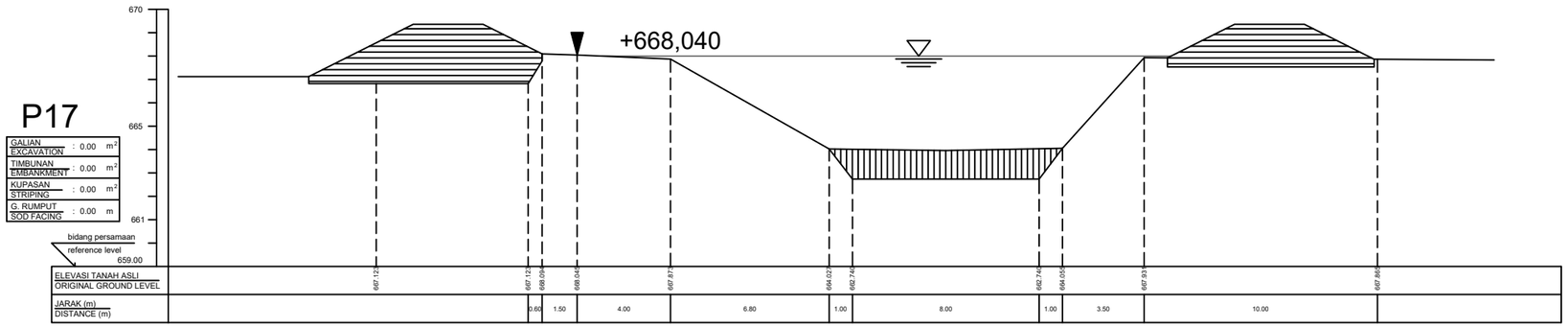
P17
GALIAN EXCAVATION : 0.00 m²
TIMBUNAN EMBANKMENT : 0.00 m²
KUPASAN STRIPING : 0.00 m²
G. RUMPUT SOD FACING : 0.00 m
670
665
661
bidang persamaan
reference level
659.00
+668,040
ELEVASI TANAH ASLI
ORIGINAL GROUND LEVEL
667.123
667.123
668.090
668.040
667.873
664.023
662.740
662.740
664.055
667.933
667.865
JARAK (m)
DISTANCE (m)
0.60
1.50
4.00
6.80
1.00
8.00
1.00
3.50
10.00

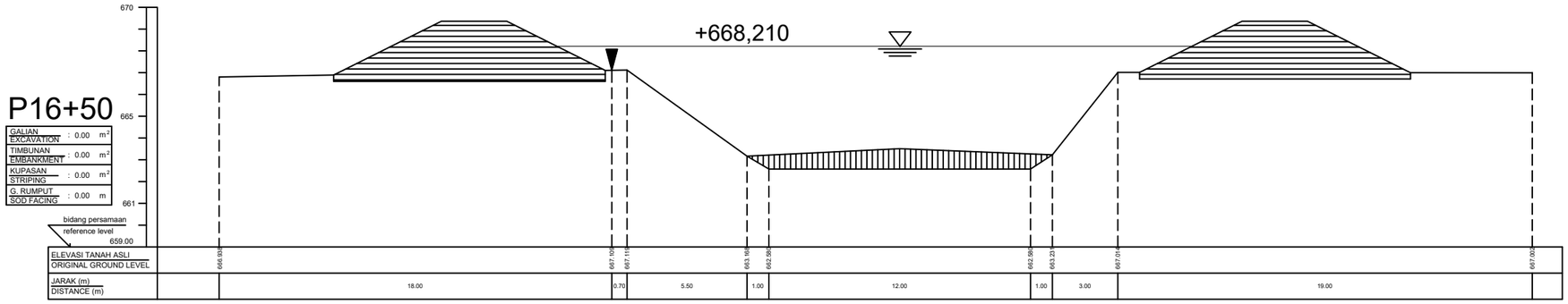
P16+50
GALIAN EXCAVATION : 0.00 m²
TIMBUNAN EMBANKMENT : 0.00 m²
KUPASAN STRIPING : 0.00 m²
G. RUMPUT SOD FACING : 0.00 m
670
665
661
bidang persamaan
reference level
659.00
+668,210
ELEVASI TANAH ASLI
ORIGINAL GROUND LEVEL
666.930
667.100
667.110
663.160
662.590
662.590
663.23
667.010
667.003
JARAK (m)
DISTANCE (m)
18.00
0.70
5.50
1.00
12.00
1.00
3.00
19.00

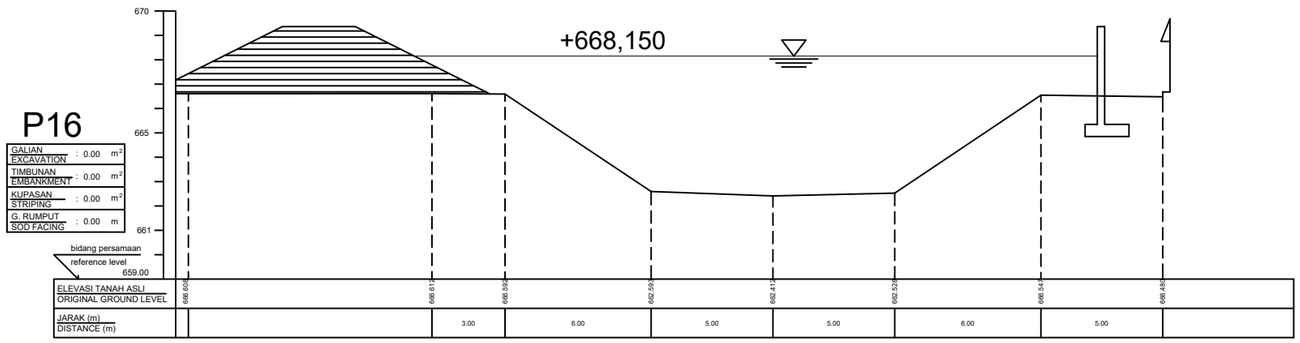
P16
GALIAN EXCAVATION : 0.00 m²
TIMBUNAN EMBANKMENT : 0.00 m²
KUPASAN STRIPING : 0.00 m²
G. RUMPUT SOD FACING : 0.00 m
670
665
661
bidang persamaan
reference level
659.00
+668,150
ELEVASI TANAH ASLI
ORIGINAL GROUND LEVEL
666.656
666.610
666.590
662.520
662.410
662.520
666.540
666.480
JARAK (m)
DISTANCE (m)
3.00
6.00
5.00
5.00
6.00
5.00

P15+50

GALIAN / EXCAVATION	: 0.00	m^2
TIMBUNAN / EMBANKMENT	: 0.00	m^2
KUPASAN / STRIPING	: 0.00	m^2
G. RUMPUT / SOD FACING	: 0.00	m

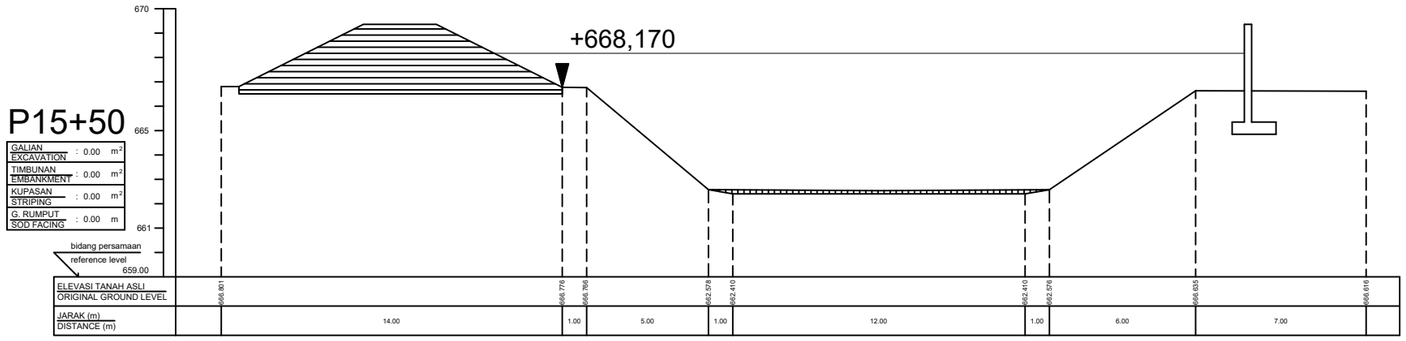

P15

GALIAN / EXCAVATION	: 0.00	m^2
TIMBUNAN / EMBANKMENT	: 0.00	m^2
KUPASAN / STRIPING	: 0.00	m^2
G. RUMPUT / SOD FACING	: 0.00	m

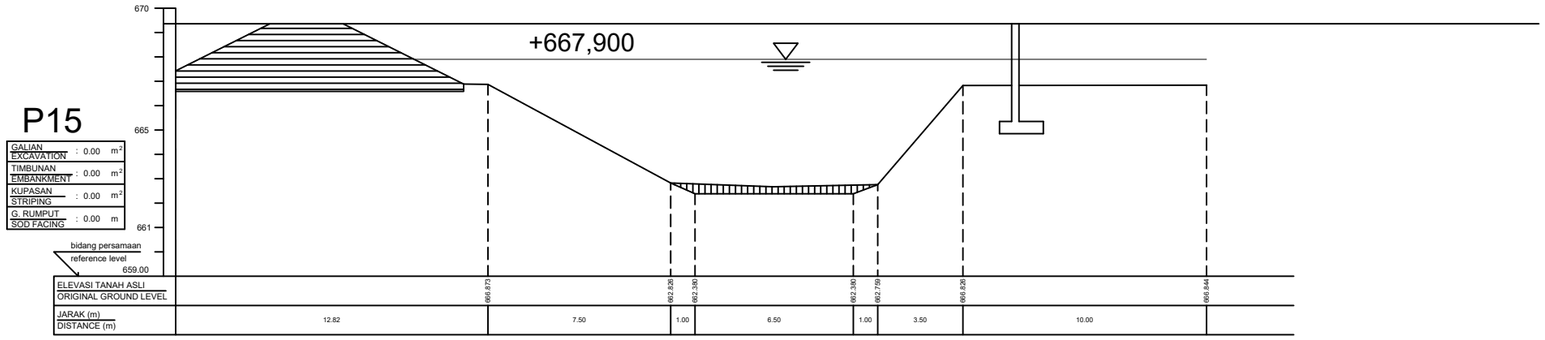

P14+50

GALIAN / EXCAVATION	: 0.00	m^2
TIMBUNAN / EMBANKMENT	: 0.00	m^2
KUPASAN / STRIPING	: 0.00	m^2
G. RUMPUT / SOD FACING	: 0.00	m

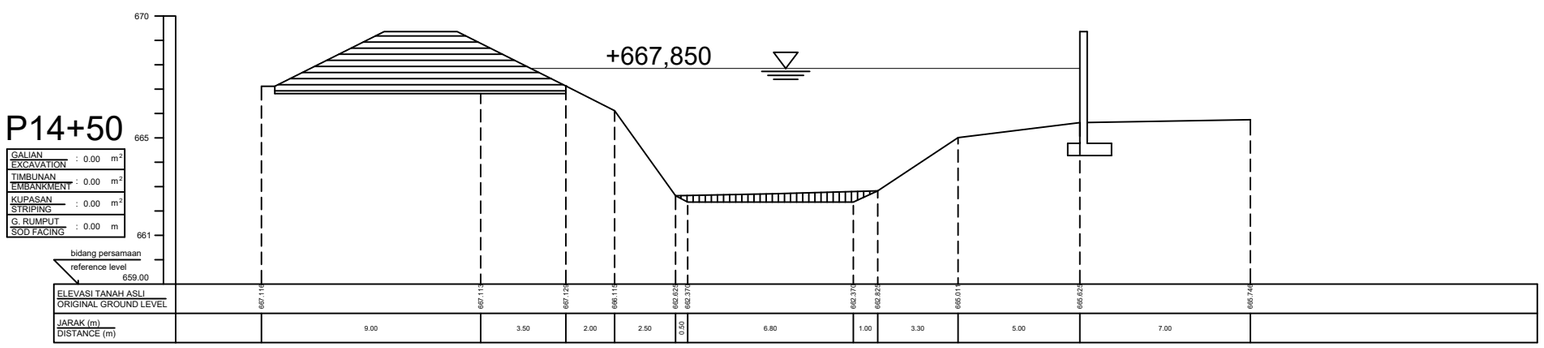

P14

GALIAN / EXCAVATION	: 0.00	m^2
TIMBUNAN / EMBANKMENT	: 0.00	m^2
KUPASAN / STRIPING	: 0.00	m^2
G. RUMPUT / SOD FACING	: 0.00	m

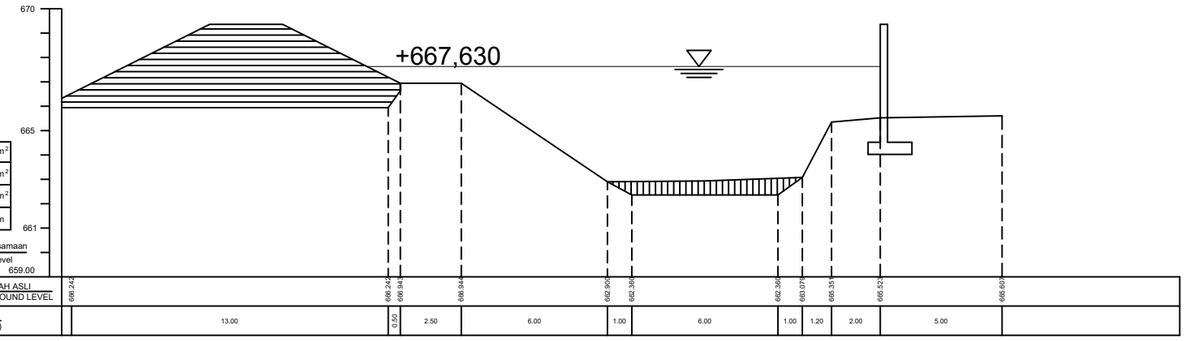

P13+50

GALIAN / EXCAVATION	: 0.00	m^2
TIMBUNAN / EMBANKMENT	: 0.00	m^2
KUPASAN / STRIPING	: 0.00	m^2
G. RUMPUT / SOD FACING	: 0.00	m

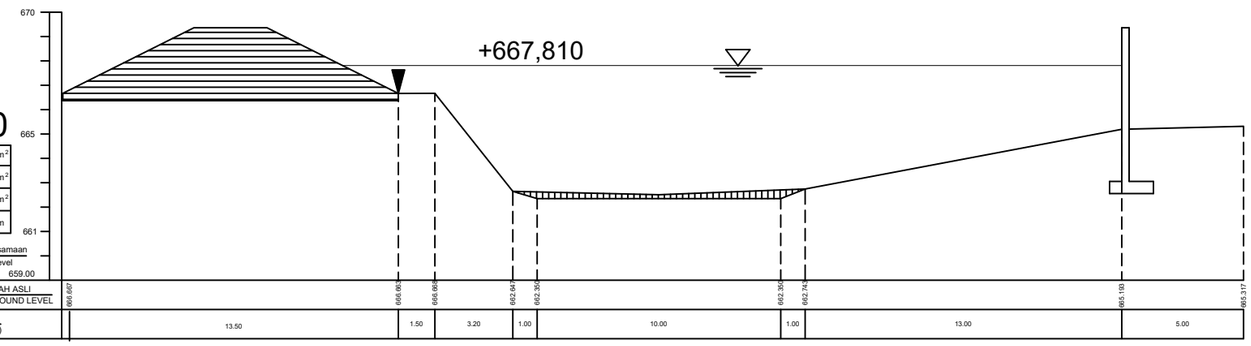

P13

GALIAN / EXCAVATION	: 0.00	m^2
TIMBUNAN / EMBANKMENT	: 0.00	m^2
KUPASAN / STRIPING	: 0.00	m^2
G. RUMPUT / SOD FACING	: 0.00	m

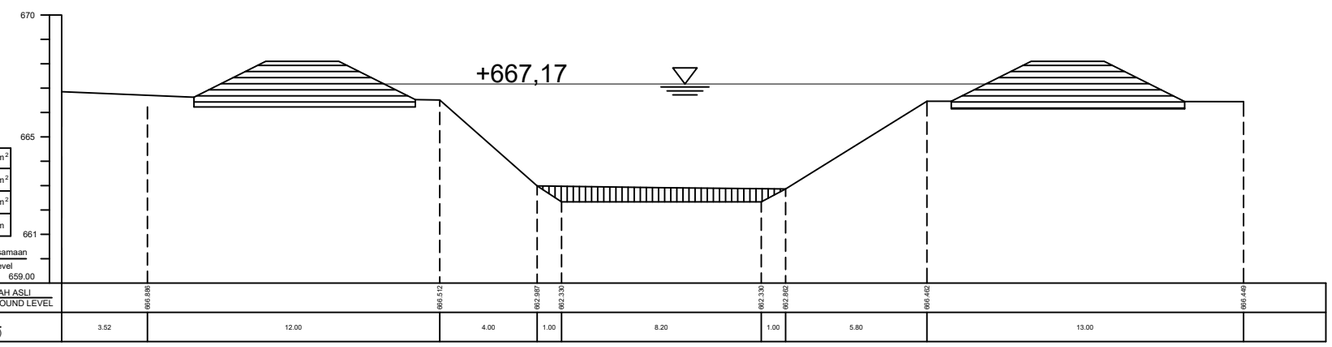

P12+50

GALIAN / EXCAVATION	: 0.00	m^2
TIMBUNAN / EMBANKMENT	: 0.00	m^2
KUPASAN / STRIPING	: 0.00	m^2
G. RUMPUT / SOD FACING	: 0.00	m

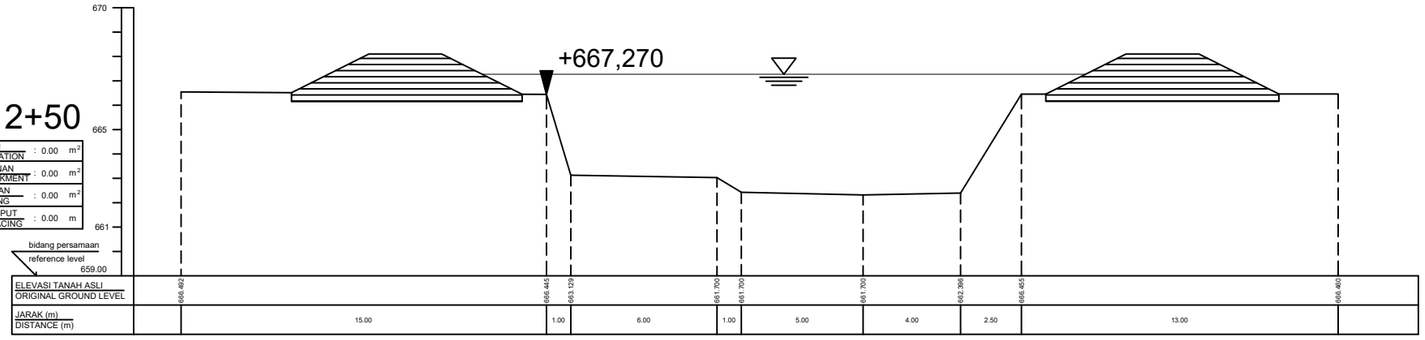

P12

GALIAN / EXCAVATION	: 0.00	m^2
TIMBUNAN / EMBANKMENT	: 0.00	m^2
KUPASAN / STRIPING	: 0.00	m^2
G. RUMPUT / SOD FACING	: 0.00	m

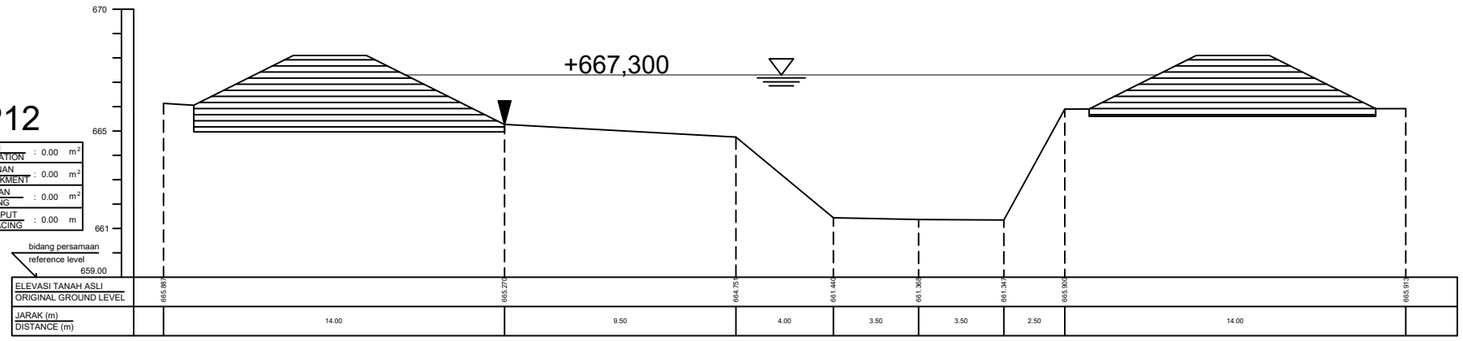

P11+50

GALIAN / EXCAVATION	: 0.00	m^2
TIMBUNAN / EMBANKMENT	: 0.00	m^2
KUPASAN / STRIPING	: 0.00	m^2
G. RUMPUT / SOD FACING	: 0.00	m

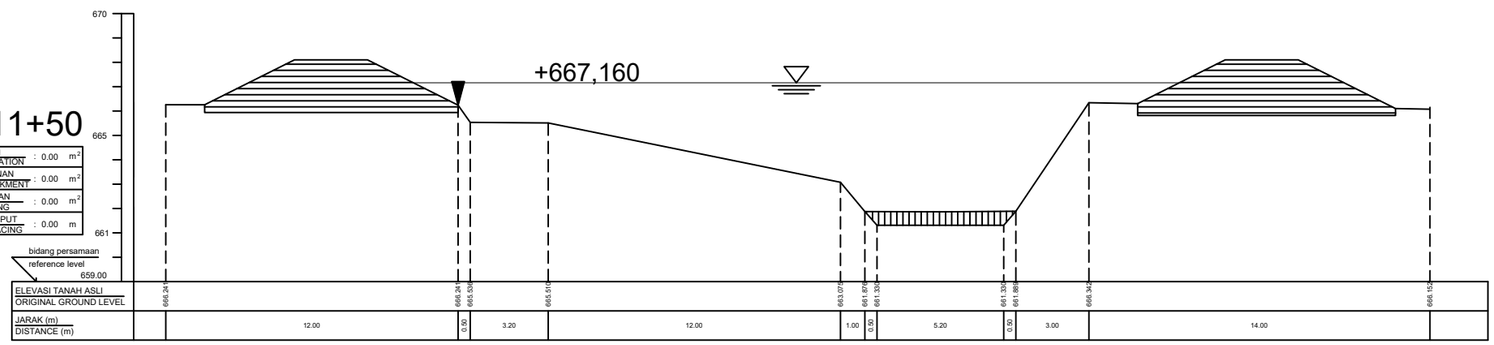

P11

GALIAN / EXCAVATION	: 0.00	m^2
TIMBUNAN / EMBANKMENT	: 0.00	m^2
KUPASAN / STRIPING	: 0.00	m^2
G. RUMPUT / SOD FACING	: 0.00	m

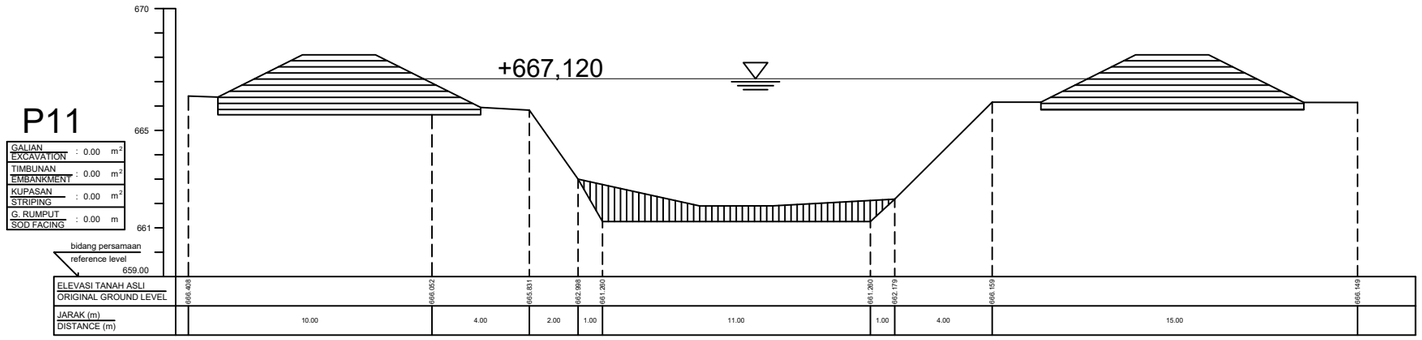

P10+50

GALIAN / EXCAVATION	: 0.00	m^2
TIMBUNAN / EMBANKMENT	: 0.00	m^2
KUPASAN / STRIPING	: 0.00	m^2
G. RUMPUT / SOD FACING	: 0.00	m

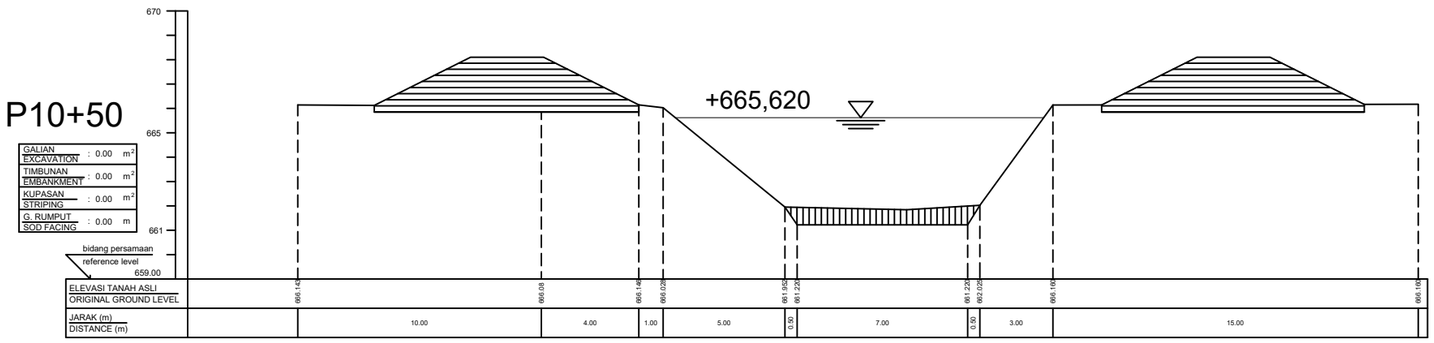

P10

GALIAN / EXCAVATION	: 0.00	m^2
TIMBUNAN / EMBANKMENT	: 0.00	m^2
KUPASAN / STRIPING	: 0.00	m^2
G. RUMPUT / SOD FACING	: 0.00	m

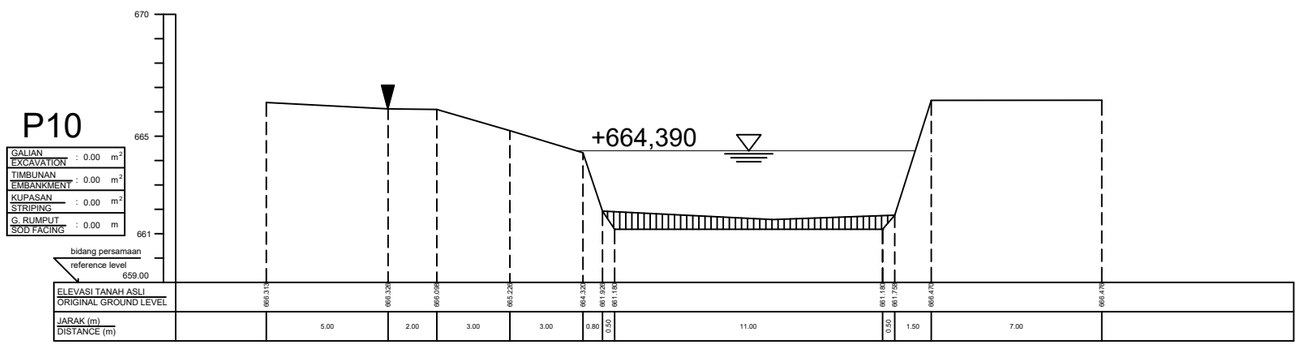

P9+50

GALIAN EXCAVATION	: 0.00	m^2
TIMBUNAN EMBANKMENT	: 0.00	m^2
KUPASAN STRIPING	: 0.00	m^2
G. RUMPUT SOD FACING	: 0.00	m

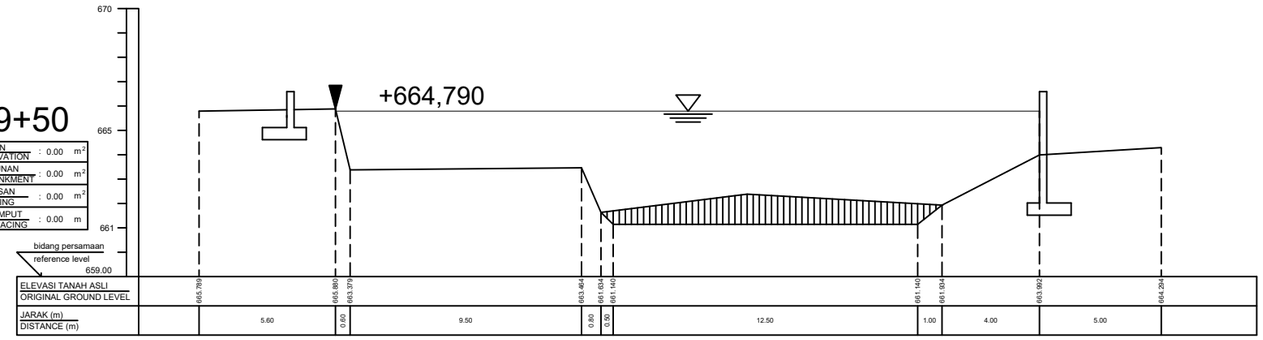

P9
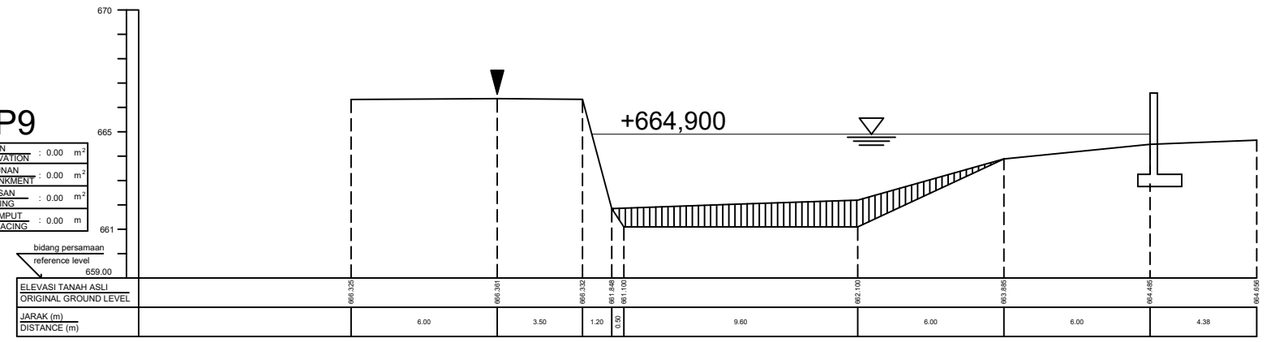
GALIAN EXCAVATION	: 0.00	m^2
TIMBUNAN EMBANKMENT	: 0.00	m^2
KUPASAN STRIPING	: 0.00	m^2
G. RUMPUT SOD FACING	: 0.00	m