LAMPIRAN E

HASIL MODEL PENGUKURAN SETELAH MODIFIKASI

a) Pengalaman Merek

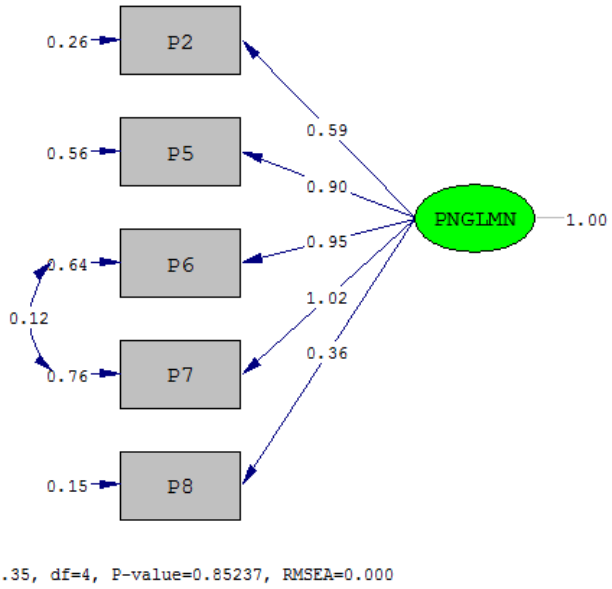


```
TI UJI P 230
 DA NI=11 NO=230 MA=CM
 LA
 P1 P2 P3 P4 P5 P6 P7 P8 P9 P10
 P11
 CM                FI='D:\Echa\UJI                DEL
230\PENGALAMAN230\DATAP230.COV' SY
 SE
 2 5 6 7 8/
 MO NX=5 NK=1 TD=SY
 LK
 PNGLMN
 FR LX(1,1) LX(2,1) LX(3,1) LX(4,1) LX 5 1
 FR TD(1,1) TD(2,2) TD(3,3) TD(4,4) TD 5 5 TD
4 3
 PD
 OU MI FS SS

 TI UJI P 230

                    Number of Input Variables 11
                    Number of Y - Variables    0
                    Number of X - Variables    5
                    Number of ETA - Variables  0
                    Number of KSI - Variables  1
                    Number of Observations   230
```

```
TI UJI P 230

 Number of Iterations =  5

 LISREL Estimates (Maximum Likelihood)

        LAMBDA-X

            PNGLMN
          --------
     P2       0.59
            (0.05)
             12.62
     P5       0.90
            (0.07)
             12.84
     P6       0.95
            (0.08)
             12.55
     P7       1.02
            (0.08)
             12.40
     P8       0.36
            (0.03)
             10.84

        PHI
```

	PNGLMN
	1.00

THETA-DELTA

	P2	P5	P6	P7	P8
P2	0.26				
	(0.03)				
	8.12				
P5	- -	0.56			
		(0.07)			
		7.95			
P6	- -	- -	0.64		
			(0.08)		
			7.53		
P7	- -	- -	0.12	0.76	
			(0.07)	(0.10)	
			1.72	7.62	
P8	- -	- -	- -	- -	0.15
					(0.02)
					9.14

Squared Multiple Correlations for X - Variables

P2	P5	P6	P7	P8
0.58	0.59	0.59	0.58	0.46

Goodness of Fit Statistics

Degrees of Freedom = 4
Minimum Fit Function Chi-Square = 1.37 (P = 0.85)
Normal Theory Weighted Least Squares Chi-Square = 1.35 (P = 0.85)
Estimated Non-centrality Parameter (NCP) = 0.0
90 Percent Confidence Interval for NCP = (0.0 ; 2.73)

Minimum Fit Function Value = 0.0060
Population Discrepancy Function Value (F0) = 0.0
90 Percent Confidence Interval for F0 = (0.0 ; 0.012)
Root Mean Square Error of Approximation (RMSEA) = 0.0
90 Percent Confidence Interval for RMSEA = (0.0 ; 0.055)
P-Value for Test of Close Fit (RMSEA < 0.05) = 0.94

Expected Cross-Validation Index (ECVI) = 0.11
90 Percent Confidence Interval for ECVI = (0.11 ; 0.13)
ECVI for Saturated Model = 0.13
ECVI for Independence Model = 3.24

Chi-Square for Independence Model with 10 Degrees of Freedom = 731.72
Independence AIC = 741.72
Model AIC = 23.35
Saturated AIC = 30.00
Independence CAIC = 763.91
Model CAIC = 72.17
Saturated CAIC = 96.57

Normed Fit Index (NFI) = 1.00
Non-Normed Fit Index (NNFI) = 1.01
Parsimony Normed Fit Index (PNFI) = 0.40
Comparative Fit Index (CFI) = 1.00
Incremental Fit Index (IFI) = 1.00
Relative Fit Index (RFI) = 1.00

Critical N (CN) = 2225.49

Root Mean Square Residual (RMR) = 0.0079
Standardized RMR = 0.0088
Goodness of Fit Index (GFI) = 1.00
Adjusted Goodness of Fit Index (AGFI) = 0.99
Parsimony Goodness of Fit Index (PGFI) = 0.27

Factor Scores Regressions

KSI

	P2	P5	P6	P7	P8
PNGLMN	0.33	0.23	0.18	0.16	0.34

TI UJI P 230

Standardized Solution

LAMBDA-X

	PNGLMN
P2	0.59
P5	0.90
P6	0.95
P7	1.02
P8	0.36

b) Kepuasan

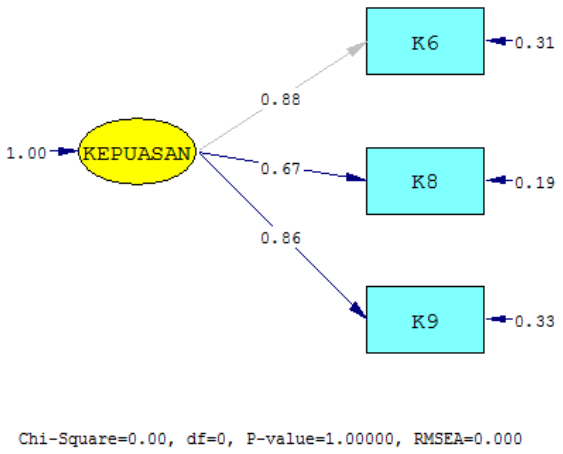


```
TI UJI K 230
 DA NI=9 NO=230 MA=CM
 LA
 K1 K2 K3 K4 K5 K6 K7 K8 K9
 CM          FI='D:\ECHA\UJI          DEL
230\KEPUASAN230\DATAK230.COV' SY
 SE
 6 8 9 /
 MO NY=3 NE=1 PS=SY TE=SY
 LE
 KEPUASAN
 FR LY(1,1) LY(2,1) LY(3,1)
 FR TE(1,1) TE(2,2) TE(3,3)
 PD
 OU SS MI FS

 TI UJI K 230

                Number of Input Variables  9
                Number of Y - Variables    3
                Number of X - Variables    0
                Number of ETA - Variables  1
                Number of KSI - Variables  0
                Number of Observations   230

TI UJI K 230

 Number of Iterations =  0

 LISREL Estimates (Maximum Likelihood)

      LAMBDA-Y

        KEPUASAN
        --------
    K6      0.88
    K8      0.67
          (0.05)
           13.81
    K9      0.86
          (0.06)
           13.73

      Covariance Matrix of ETA

        KEPUASAN
        --------
           1.00

      PSI

        KEPUASAN
        --------
           1.00
          (0.13)
           7.44

      THETA-EPS

            K6       K8       K9
        --------  --------  --------
           0.31      0.19      0.33
          (0.05)    (0.03)    (0.05)
           6.49      6.80      7.00

      Squared Multiple Correlations for Y -
Variables

            K6       K8       K9
        --------  --------  --------
           0.72      0.70      0.69

                Goodness of Fit Statistics

                Degrees of Freedom = 0
        Minimum Fit Function Chi-Square = 0.00 (P =
                1.00)
        Normal Theory Weighted Least Squares Chi-
                Square = 0.00 (P = 1.00)

        The Model is Saturated, the Fit is Perfect !
```

Factor Scores Regressions

ETA

	K6	K8	K9
KEPUASAN	0.35	0.43	0.32

TI UJI K 230

Standardized Solution

LAMBDA-Y

	KEPUASAN
K6	0.88
K8	0.67
K9	0.86

Correlation Matrix of ETA

KEPUASAN
1.00

c) Kepercayaan Merek

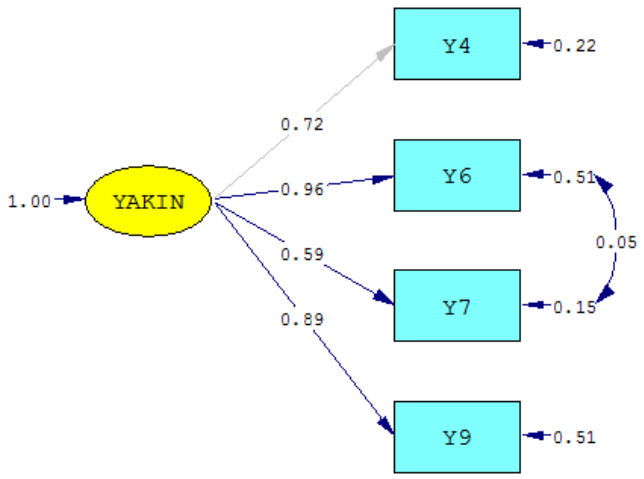

Chi-Square=0.23, df=1, P-value=0.62915, RMSEA=0.000

TI UJI Y 230
DA NI=9 NO=230 MA=CM
LA
Y1 Y2 Y3 Y4 Y5 Y6 Y7 Y8 Y9
CM FI='D:\ECHA\UJI DEL 230\YAKIN230\DATAY230.COV' SY
SE
4 6 7 9/
MO NY=4 NE=1 PS=SY TE=SY
LE
YAKIN
FR LY(1,1) LY(2,1) LY(3,1) LY(4,1)
FR TE(1,1) TE(2,2) TE(3,3) TE(4,4) te 2 3
PD
OU SS MI FS

TI UJI Y 230

Number of Input Variables 9
Number of Y - Variables 4
Number of X - Variables 0

Number of ETA - Variables 1
Number of KSI - Variables 0
Number of Observations 230

TI UJI Y 230

Number of Iterations = 5

LISREL Estimates (Maximum Likelihood)

LAMBDA-Y

	YAKIN
Y4	0.72
Y6	0.96
	(0.08)
	12.36
Y7	0.59
	(0.05)
	13.09
Y9	0.89
	(0.07)

12.90

Covariance Matrix of ETA

YAKIN
1.00

PSI

YAKIN
1.00
(0.14)
7.33

THETA-EPS

	Y4	Y6	Y7	Y9
Y4	0.22			
	(0.03)			
	6.60			
Y6	- -	0.51		
		(0.07)		
		6.90		
Y7	- -	0.05	0.15	
		(0.03)	(0.02)	
		1.51	6.15	
Y9	- -	- -	- -	0.51
				(0.06)
				8.25

Squared Multiple Correlations for Y - Variables

Y4	Y6	Y7	Y9
0.70	0.65	0.70	0.61

Goodness of Fit Statistics

Degrees of Freedom = 1
Minimum Fit Function Chi-Square = 0.23 (P = 0.63)
Normal Theory Weighted Least Squares Chi-Square = 0.23 (P = 0.63)
Estimated Non-centrality Parameter (NCP) = 0.0
90 Percent Confidence Interval for NCP = (0.0 ; 4.32)

Minimum Fit Function Value = 0.0010
Population Discrepancy Function Value (F0) = 0.0
90 Percent Confidence Interval for F0 = (0.0 ; 0.019)
Root Mean Square Error of Approximation (RMSEA) = 0.0
90 Percent Confidence Interval for RMSEA = (0.0 ; 0.14)

P-Value for Test of Close Fit (RMSEA < 0.05) = 0.72

Expected Cross-Validation Index (ECVI) = 0.083
90 Percent Confidence Interval for ECVI = (0.083 ; 0.10)
ECVI for Saturated Model = 0.087
ECVI for Independence Model = 2.77

Chi-Square for Independence Model with 6 Degrees of Freedom = 625.49
Independence AIC = 633.49
Model AIC = 18.23
Saturated AIC = 20.00
Independence CAIC = 651.24
Model CAIC = 58.18
Saturated CAIC = 64.38

Normed Fit Index (NFI) = 1.00
Non-Normed Fit Index (NNFI) = 1.01
Parsimony Normed Fit Index (PNFI) = 0.17
Comparative Fit Index (CFI) = 1.00
Incremental Fit Index (IFI) = 1.00
Relative Fit Index (RFI) = 1.00

Critical N (CN) = 6512.93

Root Mean Square Residual (RMR) = 0.0034
Standardized RMR = 0.0031
Goodness of Fit Index (GFI) = 1.00
Adjusted Goodness of Fit Index (AGFI) = 0.99
Parsimony Goodness of Fit Index (PGFI) = 0.100

Factor Scores Regressions

ETA

	Y4	Y6	Y7	Y9
YAKIN	0.39	0.18	0.41	0.20

TI UJI Y 230

Standardized Solution

LAMBDA-Y

	YAKIN
Y4	0.72
Y6	0.96
Y7	0.59
Y9	0.89

Correlation Matrix of ETA

YAKIN
1.00

d) Loyalitas Merek

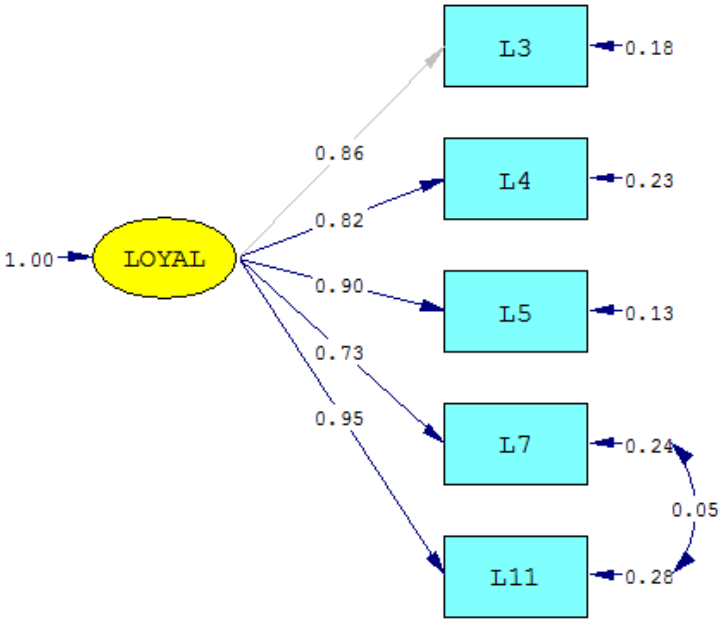

Chi-Square=3.38, df=4, P-value=0.49678, RMSEA=0.000

```
TI UJI L 230
 DA NI=13 NO=230 MA=CM
 LA
 L1 L2 L3 L4 L5 L6 L7 L8 L9 L10
 L11 L12 L13
 CM                FI='D:\Echa\UJI                DEL
230\LOYAL230\DATAL230.COV' SY
 SE
 3 4 5 7 11 /
 MO NY=5 NE=1 PS=SY TE=SY
 LE
 LOYAL
 FR LY(1,1) LY(2,1) LY(3,1) LY(4,1) LY(5,1)
 FR TE(1,1) TE(2,2) TE(3,3) TE(4,4) TE(5,5)
 FR TE(5,4)
 PD
 OU SS MI FS

 TI UJI L 230

                    Number of Input Variables 13
                    Number of Y - Variables    5
                    Number of X - Variables    0
                    Number of ETA - Variables  1
                    Number of KSI - Variables  0
                    Number of Observations   230

TI UJI L 230

 Number of Iterations =  5

 LISREL Estimates (Maximum Likelihood)

      LAMBDA-Y

                 LOYAL
                 --------
L3                0.86
L4                0.82
                 (0.04)
                  19.07
L5                0.90
                 (0.04)
                  22.58
L7                0.73
                 (0.04)
                  17.27
L11               0.95
                 (0.05)
                  19.33

Covariance Matrix of ETA

                 LOYAL
                 --------
                   1.00

PSI

                 LOYAL
                 --------
                   1.00
                 (0.12)
                   8.68

THETA-EPS

                 L3        L4        L5        L7        L11
```

L3	0.18				
	(0.02)				
	8.06				
L4	- -	0.23			
		(0.03)			
		8.87			
L5	- -	- -	0.13		
			(0.02)		
			6.73		
L7	- -	- -	- -	0.24	
				(0.03)	
				9.16	
L11	- -	- -	- -	0.05	0.28
				(0.02)	(0.03)
				2.12	8.57

Squared Multiple Correlations for Y - Variables

L3	L4	L5	L7	L11
0.81	0.75	0.86	0.68	0.76

Goodness of Fit Statistics

Degrees of Freedom = 4
Minimum Fit Function Chi-Square = 3.38 (P = 0.50)
Normal Theory Weighted Least Squares Chi-Square = 3.38 (P = 0.50)
Estimated Non-centrality Parameter (NCP) = 0.0
90 Percent Confidence Interval for NCP = (0.0 ; 7.85)

Minimum Fit Function Value = 0.015
Population Discrepancy Function Value (F0) = 0.0
90 Percent Confidence Interval for F0 = (0.0 ; 0.034)
Root Mean Square Error of Approximation (RMSEA) = 0.0
90 Percent Confidence Interval for RMSEA = (0.0 ; 0.093)
P-Value for Test of Close Fit (RMSEA < 0.05) = 0.73

Expected Cross-Validation Index (ECVI) = 0.11
90 Percent Confidence Interval for ECVI = (0.11 ; 0.15)
ECVI for Saturated Model = 0.13
ECVI for Independence Model = 6.07

Chi-Square for Independence Model with 10 Degrees of Freedom = 1379.01
Independence AIC = 1389.01
Model AIC = 25.38
Saturated AIC = 30.00
Independence CAIC = 1411.20
Model CAIC = 74.20
Saturated CAIC = 96.57

Normed Fit Index (NFI) = 1.00
Non-Normed Fit Index (NNFI) = 1.00
Parsimony Normed Fit Index (PNFI) = 0.40
Comparative Fit Index (CFI) = 1.00
Incremental Fit Index (IFI) = 1.00
Relative Fit Index (RFI) = 0.99

Critical N (CN) = 899.21

Root Mean Square Residual (RMR) = 0.0060
Standardized RMR = 0.0067
Goodness of Fit Index (GFI) = 0.99
Adjusted Goodness of Fit Index (AGFI) = 0.98
Parsimony Goodness of Fit Index (PGFI) = 0.27

Factor Scores Regressions

ETA

	L3	L4	L5	L7	L11
LOYAL	0.26	0.19	0.37	0.13	0.15

TI UJI L 230

Standardized Solution

LAMBDA-Y

	LOYAL
L3	0.86
L4	0.82
L5	0.90
L7	0.73
L11	0.95

Correlation Matrix of ETA

LOYAL
1.00